ISUZU

WORKSHOP MANUAL

TROOPER (UX)

FOREWORD

This manual includes special notes, important points, service data, precautions, etc. that are needed for the maintenance, adjustments, service, removal and installation of vehicle components.

All information, illustrations and specifications contained in this manual are based on the latest product information available at the time of publication.

All rights are reserved to make changes at any time without notice.

Arrangement of the material is shown in the table of contents on the right-hand side of this page. A black spot on the first page of each section can be seen on the edge of the book below each section title. These point to a more detailed table of contents preceding each section.

This manual applies to 1995 models.

PUBLICATION NO. UX00-WSM-L0001-00

© 1994 ISUZU MOTORS LIMITED

SECTION	TABLE OF CONTENTS
	GENERAL INFORMATION
0A	General Information
0B	Maintenance and Lubrication
	HEATING AND AIR CONDITIONING
1A	Heating and Ventilation
1B	Air Conditioning
1D	Compressor Overhaul
	FRAME, BUMPERS AND SHEET METAL
2A	Frame
2B	Bumpers
2C	Sheet Metal
	STEERING, SUSPENSION, WHEELS AND TIRES
3	Diagnosis
3A	Front End Alignment
3B1	Power Steering Gear and Pump
3B3	Steering Linkage
3C	Front Suspension
3D	Rear Suspension
3E	Wheels and Tires
3F4	Supplemental Restraint System Steering Wheel and Column
	PROPELLER SHAFT AND AXLE
4A	Propeller Shaft
4B	Rear Axle
4C	Front Driving Axle
	BRAKES
5A	Hydraulic Brakes
5A1	Brake Booster System
5A2	Disc Brakes
5A3	Rear Wheel Antilock Brake System (RWAL)
5A4	4-wheel Antilock Brake System (ABS)
5C	Parking Brakes
	ENGINE
6	Engine General Information
6A	General Engine Mechanical
6A1	3.2L V6 Engine
6B	Engine Cooling
6C	Engine Fuel
6D	Engine Electrical
6D1	Battery
6D2	Cranking System
6D3	Charging System
6D4	Ignition System
6E2	Driveability and Emissions
6F	Engine Exhaust
	TRANSMISSION
7A	Automatic Transmission (4L30-E)
7B	Manual Transmission
7C	Clutch
7D	Transfer Case
8	**CHASSIS ELECTRICAL**
	ACCESSORIES
9A	Radio
9B	Cruise Control
9J	Supplemental Restraint System (SRS)-AIR BAG
10	**BODY**
APPENDIX A	**CONVERSION TABLES**
APPENDIX B	**HYDRAULIC CIRCUIT DIAGRAM (Automatic Transmission)**

GENERAL INFORMATION

CONTENTS

General Information ..... Section 0A
Maintenance and Lubrication ..... Section 0B

SECTION 0A

GENERAL INFORMATION

CONTENTS

General repair instructions 0A- 1
How to use this manual 0A- 2
Identification 0A- 5
Lifting instructions 0A- 7
Standard bolts torque specifications 0A- 9
Abbreviations charts 0A-10
Service parts identification plate 0A-12

GENERAL REPAIR INSTRUCTIONS

1. If a floor jack is used, the following precautions are recommended.
   Park vehicle on level ground, "block" front or rear wheels, set jack against the recommended lifting points (see "Lifting instructions" in this section), raise vehicle and support with chassis stands and then perform service operations.
2. Before performing service operations, disconnect ground cable from the battery to reduce the chance of cable damage and burning due to short circuiting.
3. Use a cover on body, seats and floor to protect them against damage and contamination.
4. Brake fluid and anti-freeze solution must be handled with reasonable care, as they can cause paint damage.
5. The use of proper tools and recommended essential and available tools, where specified, is important for efficient and reliable performance of service repairs.
6. Use genuine Isuzu parts.
7. Used cotter pins, plastic clips, gaskets, O-rings, oil seals, lock washers and self-locking nuts should be discarded and new ones should be installed, as normal function of the parts cannot be maintained if these parts are reused.
8. To facilitate proper and smooth reassembly operation, keep disassembled parts neatly in groups. Keeping fixing bolts and nuts separate is very important, as they vary in hardness and design depending on position of installation.
9. Clean the parts before inspection or reassembly. Also clean oil ports, etc. using compressed air, and make certain they are free from restrictions.
10. Lubricate rotating and sliding faces of the parts with oil or grease before installation.
11. When necessary, use a sealer on gaskets to prevent leakage.
12. Carefully observe all specifications for bolt and nut torques.
13. When removing or replacing parts that require refrigerant to be discharged from the air conditioning system, be sure to use the Vehicle Refrigerant Recovery and Recycling Equipment (VRRRE) to recover and recycle Refrigerant-134a.
14. When a service operation is completed, make a final check to be sure the service has been done properly and the problem has been corrected.

HOW TO USE THE MANUAL

1. Find the applicable section by referring to the table of contents.
2. Each section is basically arranged in the following order headings:
   General description
   Diagnosis
   On-vehicle service
   Unit repair
   Main data and specifications
   Special tools
3. The service operations are in two groups: one is the "On-vehicle service" where operations can be directly performed on the vehicle, and the other is the "Unit repair" where the operations are done on the work bench after removing the unit from the vehicle.
4. In the beginning of each section (with the description of service operations between them, as a rule), the General Description and the Diagnosis give information for the related malfunctions and diagnosis. And, in the following portion, the service data or the special tools necessary for the service operations of the section are gathered together under "Main Data and Specifications" and the "Special Tools", for at-a-glance reference.
5. Each service operation section begins with a disassembled view of unit or equipment, which is useful to find relative components, service procedure, availability and contents of repair kits, etc.

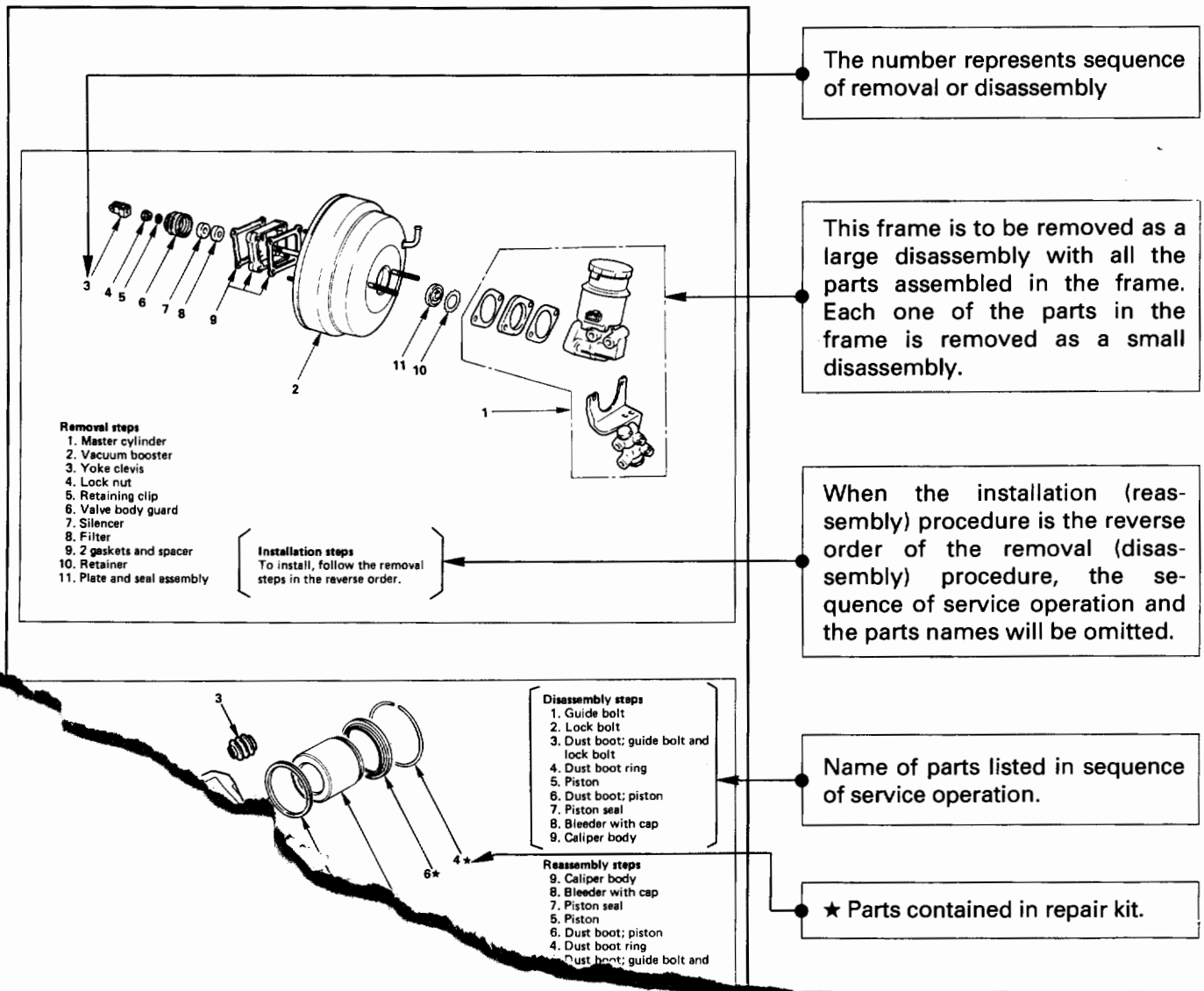

The number represents sequence of removal or disassembly

This frame is to be removed as a large disassembly with all the parts assembled in the frame. Each one of the parts in the frame is removed as a small disassembly.

When the installation (reassembly) procedure is the reverse order of the removal (disassembly) procedure, the sequence of service operation and the parts names will be omitted.

Name of parts listed in sequence of service operation.

★ Parts contained in repair kit.

...tes repair kit availability.

For illustrations where there are few items to be performed:

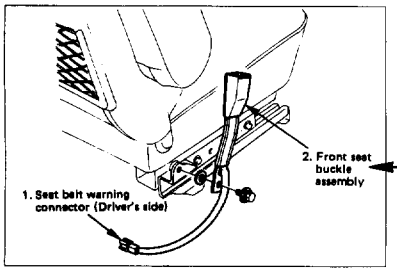

The sequence of removal (disassembly) and the parts names will be given.

6. After the illustration, the details of each operation are shown in the order the operations are carried out in the illustration. Refer to the explanations when checking important information such as the notes in each operation, and places where special tools are to be used and their usage, and the specified service data.

REASSEMBLY

13. Gear box

12. O-ring (Fig. 3B1-22)

- Apply a thin coat of power steering fluid.
- Be sure to discard used part, and always use new part for installation.

7. O-ring

6. Top cover assembly

Torque N·m (lb·ft)	47 (35)

5. Lock nut

Adjust the backlash between the worm gear and the ball nut (Fig. 3B1-25).

1) With the worm gear rotating, set it to the straight ahead position.
2) Set the worm shaft preload to below 10kg-cm with the sector shaft adjusting screw.
3) Measure the worm shaft preload with the worm gear turned 450° both to the right and to the left.
   The worm gear preload in these positions should be 2-4kg-cm lower than in the straight ahead position.
4) Lock the sector shaft adjusting screw with the lock nut.

Lock nut torque N·m (lb·ft)	41 (30)

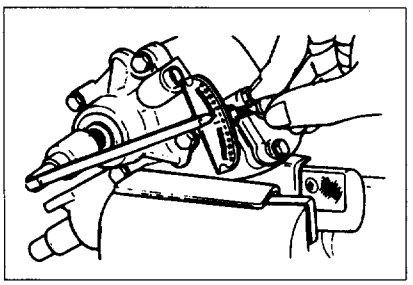

Fig. 3B1-25

4. Oil seal (Fig. 3B1-26)

Installer: J-26508

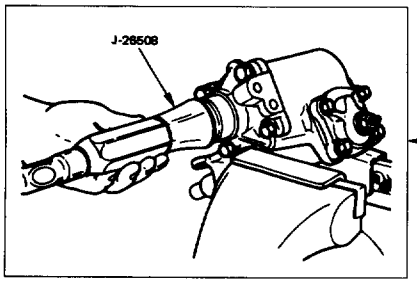

Fig. 3B1-26

The symbol mark attached to the title indicates the action to be taken in the operations of each title.
Example for this case;
1st step – Reassemble gear box

The numbers given to the installation (assembly) procedure are the same as those given in the removal (disassembly) procedure in the illustration. Therefore, start with the larger number during reassembly.

The titles of operations done in the illustration are given in bold letters. They are described in the order of the procedure of the operations.

Important note.

Service data and specifications are listed in table.

The action symbol indicates the step of service to be followed. Refer to the following paragra for the meaning of each sym

Special tools are identifi tool name and/or tool nu The drawing illustrate tool is used.

7. In this manual, the following action symbols are used to indicate the type of service operations to be performed.

...	Remove or disconnect	...	Adjust
...	Install or connect	...	Clean
...	Disassemble	...	Pay close attention — Important
...	Reassemble	...	Tighten to specified torque
...	Align the marks	...	Use special tool(s)
...	Correct direction	...	Lubricate with oil
...	Inspect	...	Lubricate with grease
...	Take measurement	...	Use liquid gasket

8. The service standard is indicated in terms of "Standard" and "Limit".
The "Standard" means the assembly standard and standard range within which the parts are considered serviceable.
"Limit" indicates the limit value (Correction or replacement is necessary when measurement is beyond this limit.)

IDENTIFICATION

VEHICLE IDENTIFICATION NUMBER (VIN)

This is the legal identification of the vehicle. It is located on the left bottom of the windshield. It can be easily seen through the windshield from outside the vehicle (Fig. 0A-1).

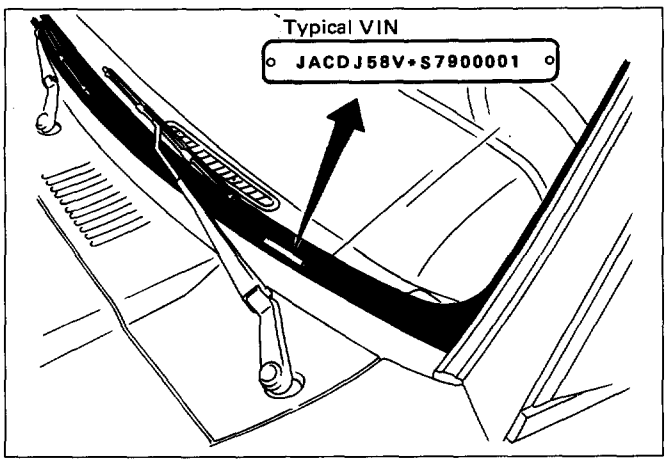

Fig. 0A-1

JAC D J 5 8 V * S 7 900001

- 900001 — Sequential Number
- 7 — Assembly Plant
- S — Model Year (5 = 1995)
- * — Check Digit
- V — Engine Type (V = 3.2L V6 SOHC ; 6VD1) (W = 3.2L V6 DOHC ; 6VD1)
- 8 — Body Type (7 = 2 Door Cab ; Short Wheel Base) (8 = 4 Door Cab ; Long Wheel Base)
- 5 — Series
- J — Vehicle Line (J = with SRS-Air Bag model)
- D — GVWR Range (D = 5001 ~ 6000 LBS)
- JAC — World Manufacturer Identifier

ENGINE SERIAL NUMBER

The gasoline engine serial number is stamped on the left rear lower area of the cylinder block above the starter (Fig. 0A-2).

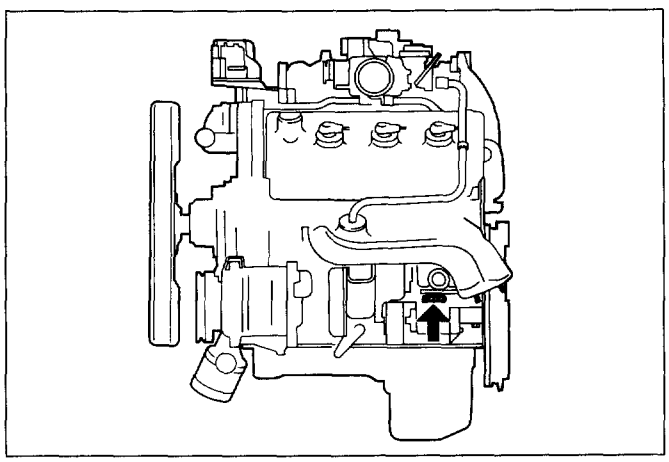

Fig. 0A-2

TRANSMISSION SERIAL NUMBER

Manual: Stamped on the left side of the transmission intermediate plate (Fig. 0A-3).

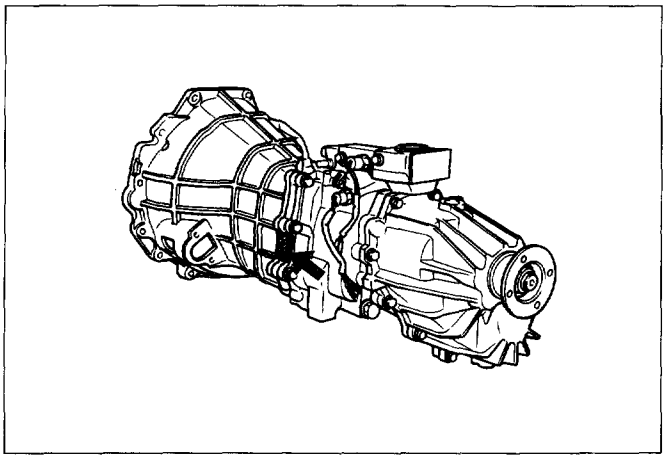

Fig. 0A-3

Automatic: Stamped on the identification plate, located on the left side of the transmission above the mode switch (Fig. 0A-4).

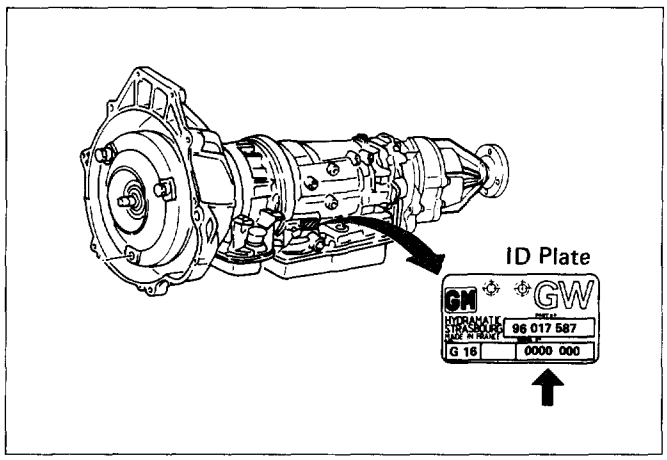

Fig. 0A-4

LIFTING INSTRUCTIONS

CAUTION:

- If a lifting device other than the original jack is used, it is most important that the device be applied only to the correct lifting points. Raising the vehicle from any other point may result in serious damage.
- When jacking or lifting a vehicle at the frame side rail or other prescribed lift points, be certain that lift pads do not contact the catalytic converter, brake pipes or cables, or fuel lines. Such contact may result in damage or unsatisfactory vehicle performance.

LIFTING POINTS AND SUPPORTABLE POINT LOCATIONS

Long Wheel Base Model

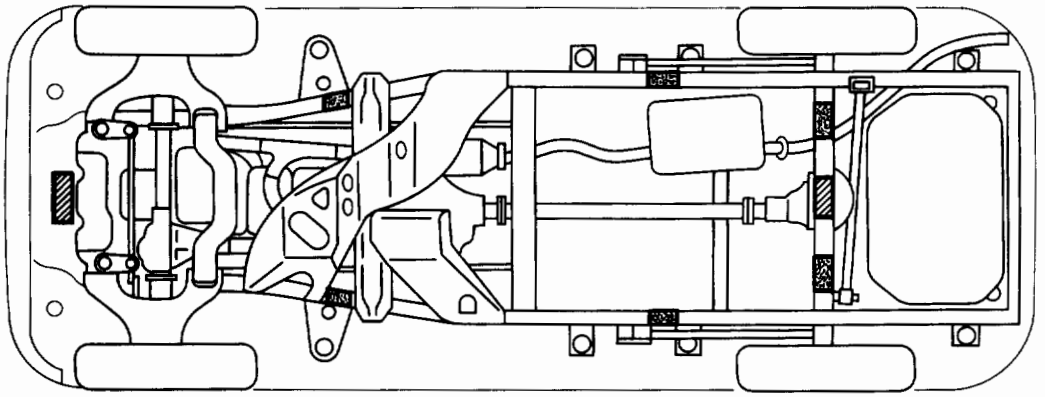

Short Wheel Base Model

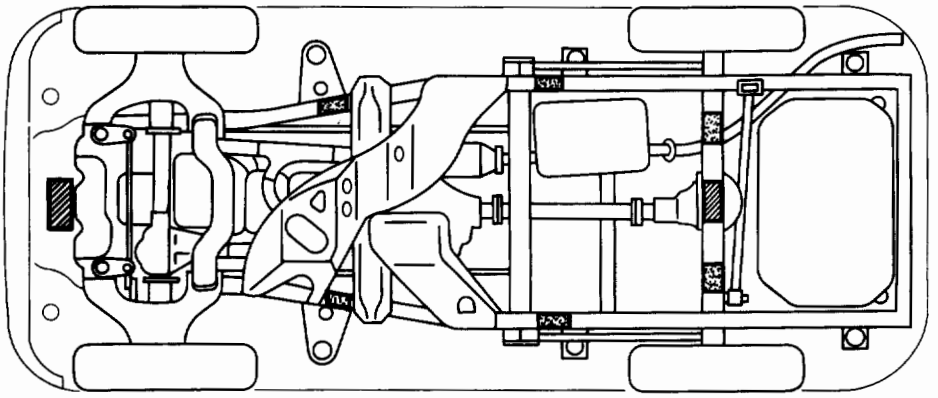

Lifting point

Supportable point

Fig. 0A-5

LIFTING POINT; FRONT

- When using floor jack, lift on the center of the skid plate (Fig. 0A-6).

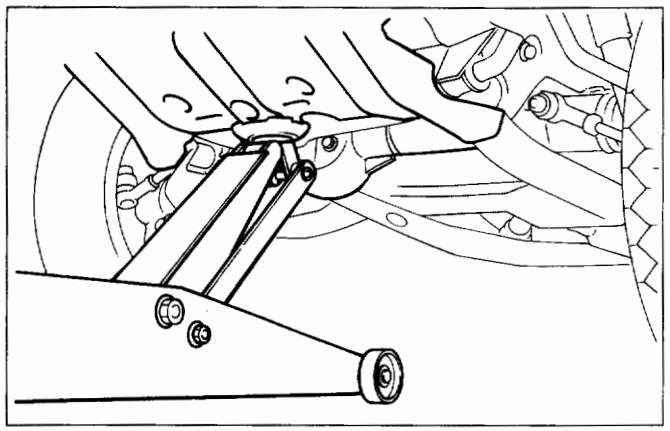

Fig. 0A-6

SUPPORTABLE POINT; FRONT

- Position the chassis stands at the bottom of the frame sidemember, behind front wheel (Fig. 0A-7).

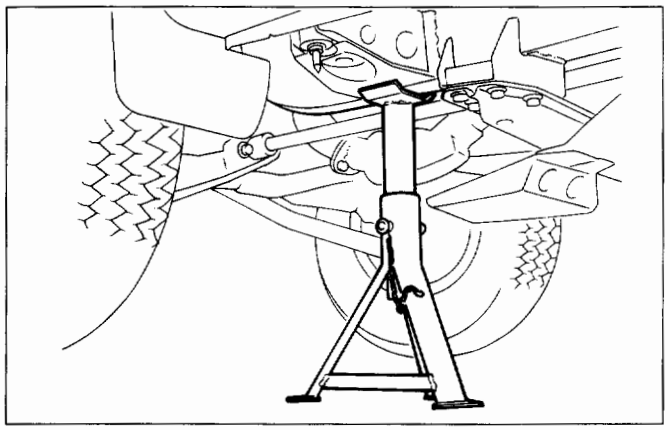

Fig. 0A-7

LIFTING POINT; REAR

- Position the floor jack at the center of the rear axle case when lifting the vehicle (Fig. 0A-8).

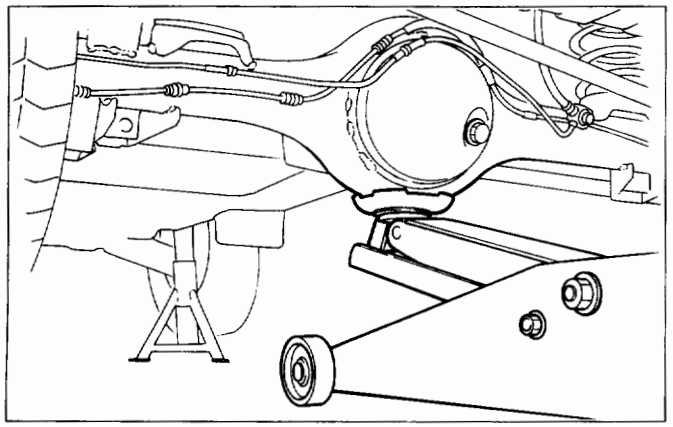

Fig. 0A-8

SUPPORTABLE POINT; REAR

- Position the chassis stands at the bottom of the frame sidemember, just behind the trailing link bracket (Fig. 0A-9).

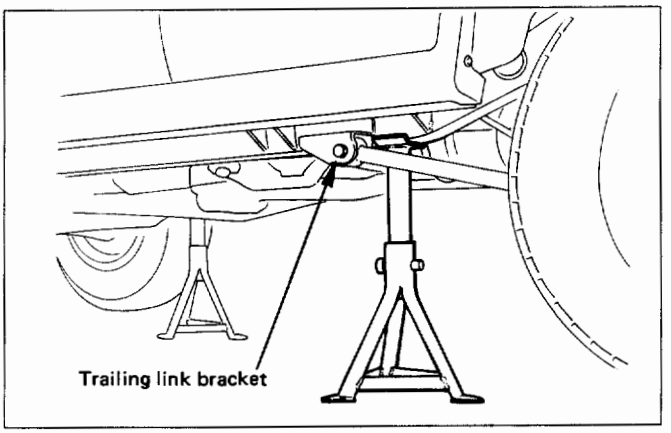

Fig. 0A-9

SUPPORTABLE POINT; REAR

- Position the chassis stands at the bottom of the rear axle case (Fig. 0A-10).

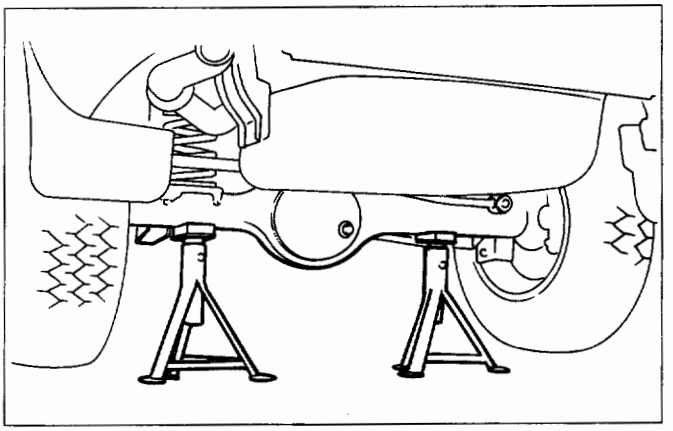

Fig. 0A-10

STANDARD BOLTS TORQUE SPECIFICATIONS

The torque values given in the following table should be applied where a particular torque is not specified.

N·m (lb·ft)

Strength Class	4.8	8.8		9.8
		Refined	Non-Refined	
Bolt Identification				
Bolt Diameter× Pitch (mm)	No mark			
M 6×1.0	4 — 8 (3 — 6)	5 — 10 (4 — 7)		—
M 8×1.25	8 — 18 (6 — 13)	12 — 23 (9 — 17)		17 — 30 (12 — 22)
M10×1.25	21 — 34 (15 — 25)	28 — 46 (20 — 34)		37 — 63 (27 — 46)
* M10×1.5	20 — 33 (14 — 25)	28 — 45 (20 — 33)		36 — 60 (27 — 44)
M12×1.25	49 — 74 (36 — 54)	61 — 91 (45 — 67)		76 — 114 (56 — 84)
* M12×1.75	45 — 69 (33 — 51)	57 — 84 (42 — 62)		72 — 107 (53 — 79)
M14×1.5	77 — 115 (56 — 85)	93 — 139 (69 — 103)		114 — 171 (84 — 126)
* M14×2.0	72 — 107 (53 — 79)	88 — 131 (65 — 97)		107 — 160 (79 — 118)
M16×1.5	104 — 157 (77 — 116)	135 — 204 (100 — 150)		160 — 240 (118 — 177)
* M16×2.0	100 — 149 (74 — 110)	130 — 194 (95 — 143)		153 — 230 (113 — 169)
M18×1.5	151 — 226 (111 — 166)	195 — 293 (144 — 216)		230 — 345 (169 — 255)
M20×1.5	206 — 310 (152 — 229)	270 — 405 (199 — 299)		317 — 476 (234 — 351)
M22×1.5	251 — 414 (185 — 305)	363 — 544 (268 — 401)		425 — 637 (313 — 469)
M24×2.0	359 — 539 (265 — 398)	431 — 711 (318 — 524)		554 — 831 (409 — 613)

The asterisk *indicates that the bolts are used for female-threaded parts that are made of soft materials such as casting, etc.

ABBREVIATIONS CHARTS

LIST OF AUTOMOTIVE ABBREVIATIONS WHICH MAY BE USED IN THIS MANUAL

A – Ampere(s)
ABS – Antilock Brake System
AC – Alternating Current
A/C – Air Conditioning
ACCEL – Accelerator
ACC – Accessory
ACL – Air Cleaner
Adj – Adjust
A/F – Air Fuel Ratio
AIR – Secondary Air Injection System
Alt – Altitude
AMP – Ampere(s)
ANT – Antenna
ASM – Assembly
A/T – Automatic Transmission/Transaxle
ATDC – After Top Dead Center
ATF – Automatic Transmission Fluid
Auth – Authority
Auto – Automatic

BARO – Barometric Pressure
Bat – Battery
B+ – Battery Positive Voltage
Bbl – Barrel
BHP – Brake Horsepower
BPT – Backpressure Transducer
BTDC – Before Top Dead Center

°C – Degrees Celsius
CAC – Charge Air Cooler
Calif – California
cc – Cubic Centimeter
CID – Cubic Inch Displacement
CKP – Crankshaft Position
CL – Closed Loop
CLCC – Closed Loop Carburetor Control
CMP – Camshaft Position
CO – Carbon Monoxide
Coax – Coaxial
Conn – Connector
Conv – Converter
Crank – Crankshaft
Cu.In. – Cubic Inch
CV – Constant Velocity
Cyl – Cylinder(s)

DI – Distributor Ignition
Diff – Differential
Dist – Distributor
DLC – Data Link Connector
DOHC – Double Overhead Camshaft
DTC – Diagnostic Trouble Code
DTM – Diagnostic Test Mode
DTT – Diagnostic Test Terminal
DVM – Digital Voltmeter (10 meg.)
DVOM – Digital Volt Ohmmeter

EBCM – Electronic Brake Control Module
ECM – Engine Control Module
ECT – Engine Coolant Temperature
EEPROM – Electronically Erasable Programmable Read Only Memory
EGR – Exhaust Gas Recirculation
EI – Electronic Ignition
ETR – Electronically Tuned Receiver
EVAP – Evaporation Emission
Exh – Exhaust

°F – Degrees Fahrenheit
Fed – Federal (All States Except Calif.)
FF – Front Drive Front Engine
FL – Fusible Link
FLW – Fusible Link Wire
FP – Fuel Pump
FRT – Front
ft – Foot
FWD – Front Wheel Drive
4WD – Four Wheel Drive
4 x 4 – Four Wheel Drive
4 A/T – Four Speed Automatic Transmission/Transaxle

Gal – Gallon
GEN – Generator
GND – Ground
Gov – Governor
g – Gram

Harn – Harness
HC – Hydrocarbons
HD – Heavy Duty
Hg – Hydrargyrum (Mercury)
HiAlt – High Altitude
HO2S – Heated Oxygen Sensor
HVAC – Heater-Vent-Air Conditioning

IAC – Idle Air Control
IAT – Intake Air Temperature
IC – Integrated Circuit
– Ignition Control
ID – Identification
– Inside Diameter
IGN – Ignition
INJ – Injection
IP – Instrument Panel
IPC – Instrument Panel Cluster
Int – Intake
ISC – Idle Speed Control

J/B – Junction Block

kg – Kilograms
km – Kilometers
km/h – Kilometer per Hour
kPa – Kilopascals
kV – Kilovolts (thousands of volts)
kW – Kilowatts
KS – Knock Sensor

L – Liter
lb·ft – Foot Pounds
lb·in – Inch Pounds

LF – Left Front
LH – Left Hand
LR – Left Rear
LS – Left Side
LWB – Long Wheel Base
L-4 – In-line Four Cylinder Engine

MAF – Mass Air Flow
MAN – Manual
MAP – Manifold Absolute Pressure
Max – Maximum
MC – Mixture Control
MFI – Multiport Fuel Injection
MIL – Malfunction Indicator Lamp
Min – Minimum
mm – Millimeter
MPG – Miles per Gallon
MPH – Miles per Hour
M/T – Manual Transmission/Transaxle
MV – Millivolt

NA – Natural Aspirated
NC – Normally Closed
N·m – Newton Meters
NO – Normally Open
NOx – Nitrogen, Oxides of

OBD – On-Board Diagnostic
OD – Outside Diameter
O/D – Over Drive
OHC – Overhead Camshaft
OL – Open Loop
O2 – Oxygen
O2S – Oxygen Sensor

PAIR – Pulsed Secondary Air Injection System
P/B – Power Brakes
PCM – Powertrain Control Module
PCV – Positive Crankcase Ventilation
PRESS – Pressure
PROM – Programmable Read Only Memory
PNP – Park/Neutral Position
P/S – Power Steering
PSI – Pounds per Square Inch
PSP – Power Steering Pressure
Pt. – Pint
Pri – Primary
PWM – Pulse Width Modulate

Qt – Quart

REF – Reference
RF – Right Front
RFI – Radio Frequency Interference
RH – Right Hand
RPM – Revolutions per Minute
RPM Sensor – Engine Speed Sensor
RPO – Regular Production Option
RR – Right Rear
RS – Right Side
RTV – Room Temperature Vulcanizing
RWAL – Rear Wheel Antilock Brake
RWD – Rear Wheel Drive

SAE – Society of Automotive Engineers
Sec – Secondary
SFI – Sequential Multiport Fuel Injection
SI – System International
SIR – Supplemental Inflatable Restraint System
SOHC – Single Overhead Camshaft
Sol – Solenoid
SPEC – Specification
Speedo – Speedometer
SRS – Supplemental Restraint System
ST – Start
– Scan Tool
Sw – Switch
SWB – Short Wheel Base
SYN – Synchronize

Tach – Tachometer
TB – Throttle Body
TBI – Throttle Body Fuel Injection
TCC – Torque Converter Clutch
TCM – Transmission Control Module
TDC – Top Dead Center
Term – Terminal
TEMP – Temperature
TP – Throttle Position
TRANS – Transmission/Transaxle
TURBO – Turbocharger
TVRS – Television & Radio Suppression
TVV – Thermal Vacuum Valve
TWC – Three Way Catalytic Converter
3 A/T – Three Speed Automatic Transmission/ Transaxle
2WD – Two Wheel Drive
4 x 2 – Two Wheel Drive

U-joint – Universal Joint

V – Volt(s)
VAC – Vacuum
VIN – Vehicle Identification Number
VRRRE – Vehicle Refrigerant Recovery and Recycling Equipment
V-ref – ECM Reference Voltage
VSS – Vehicle Speed Sensor
VSV – Vacuum Switch Valve
V-6 – Six Cylinder "V" Engine
V-8 – Eight Cylinder "V" Engine

W – Watt(s)
w/ – With
w/b – Wheel Base
w/o – Without
WOT – Wide Open Throttle

SERVICE PARTS IDENTIFICATION PLATE

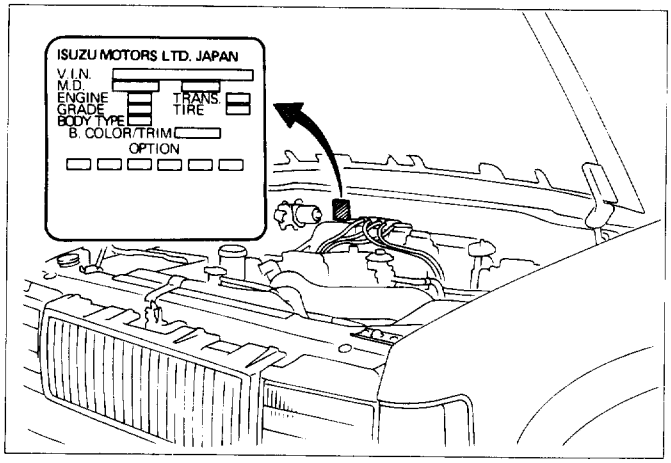

Fig. 0A-11

The Vehicle Information Plate (Service Parts ID plate) is provided on all vehicle models.
It is located on the center dash wall inside the engine compartment. The plate lists the VIN (Vehicle Identification Number), paint information and all production options and special equipment on the vehicle when it was shipped from the factory (Fig. 0A-11).

SECTION 0B

MAINTENANCE AND LUBRICATION

CONTENTS

Maintenance Schedule List 0B– 1
Explanation of Complete Vehicle Maintenance Schedule 0B– 4
Recommended Fluids and Lubricants 0B– 8
Lubricant Viscosity Chart 0B– 9
Recommended Liquid Gasket 0B–11
Recommended Thread Locking Agents ... 0B–11
Maintenance Service Data 0B–12

MAINTENANCE SCHEDULE LIST

NORMAL VEHICLE USE

The maintenance instructions in this Maintenance Schedule are based on the assumption that the vehicle will be used as designed:

- to carry passengers and cargo within the limitations specified on the tire placard located on the inside of the glove compartment door;
- to be driven on reasonable road surfaces within legal operating limits;
- to be driven on a daily basis, as a general rule, for at least several miles/kilometers;
- to be driven on unleaded fuel

Unusual or severe operating conditions will require more frequent car maintenance, as specified in the following sections.

SEVERE DRIVING CONDITIONS

If the vehicle is usually operated under any of the severe driving conditions listed below, it is recommended that the applicable maintenance services be performed at the specified interval shown in the chart below.

Severe driving conditions

- Repeated short trips in cold weather
- Driving in dusty areas
- Frequent idling and/or frequent low-speed operation
- Towing a trailer

ITEMS	INTERVAL
CHANGE ENGINE OIL AND OIL FILTER	Every 4,800 km (3,000 miles) or 3 months
CHANGE AUTOMATIC TRANSMISSION FLUID	Every 32,000 km (20,000 miles)

MILEAGE ONLY ITEMS

IN THOUSANDS OF MILES (USE ODOMETER READING) (x 1000 miles)

	MILEAGE ONLY ITEMS	7.5	15	22.5	30	37.5	45	52.5	60	67.5	75	82.5	90	97.5	105	112.5	120	DESCRIPTION
1	CHANGE FRONT AND REAR AXLE OIL																	
2	CHANGE MANUAL TRANSMISSION AND TRANSFER CASE OIL																	
3	REPLACE AIR CLEANER FILTER																	
4	REPLACE SPARK PLUGS																	
5	CHANGE ENGINE COOLANT																	
6	* REPLACE TIMING BELT																	
7	ROTATE TIRES																	
8	CHANGE POWER STEERING FLUID																	
9	REPACK FRONT WHEEL BEARINGS																	
10	REPACK FRONT FREE-WHEELING HUBS																	
11	CLEAN RADIATOR CORE AND AIR CONDITIONING CONDENSER																	
12	INSPECT SPARK PLUG WIRE																	

* : Replacement of the timing belt is recommended at every 60,000 miles (96,000 km). Failure to replace the timing belt may result in damage to the engine.

SHADED AREA INDICATES SERVICE TO BE PERFORMED.

MILEAGE/MONTHS

	MILEAGE/MONTHS whichever comes first	MONTHS OR EVERY	IN THOUSANDS OF MILES (USE ODOMETER READING) (x 1000 miles)																DESCRIPTION
			7.5	15	22.5	30	37.5	45	52.5	60	67.5	75	82.5	90	97.5	105	112.5	120	
1	CHECK BATTERY FLUID LEVEL	12																	
2	CHECK ENGINE COOLANT LEVEL	12																	
3	CHECK BRAKE AND CLUTCH FLUID LEVEL	12																	
4	CHECK FLUID LEAKS	12																	
5	* CHANGE ENGINE OIL	12																	
6	* REPLACE ENGINE OIL FILTER	12																	
7	CHECK COOLING AND HEATER HOSES	12																	
8	CHECK EXHAUST SYSTEM	12																	
9	CHECK FUEL LINE AND FUEL TANK/CAP	12																	
10	CHECK ENGINE DRIVE BELTS	24																	
11	CHECK TIRES AND WHEELS	12																	
12	CHECK STEERING OPERATION	12																	
13	CHECK BRAKE LINES AND HOSE	12																	
14	CHECK DISC BRAKES	12																	
15	CHECK BRAKE PEDAL PLAY	12																	
16	CHECK PARKING BRAKE	12																	
17	LUBE ACCELERATOR LINKAGE	6																	
18	CHECK SUSPENSION AND STEERING	12																	
19	LUBE BODY AND CHASSIS	6																	
20	LUBE FRONT AND REAR PROPELLER SHAFT	6																	
21	CHECK PROPELLER SHAFT FLANGE TORQUE	12																	
22	* CHECK AUTOMATIC TRANSMISSION FLUID	12																	
23	CHECK AUTO CRUISE CONTROL LINKAGE AND HOSES	12																	
24	CHECK CLUTCH LINES AND HOSE	12																	
25	LUBE CLUTCH PEDAL SPRING, BUSHING AND CLEVIS PIN	6																	
26	CHECK CLUTCH PEDAL FREE PLAY	12																	
27	CHECK STARTER SAFETY SWITCH	12																	
28	CHECK ACCELERATOR LINKAGE	12																	

* : Under severe driving conditions, additional maintenance is required. Refer to "Severe driving conditions".

SHADED AREA INDICATES SERVICE TO BE PERFORMED.

EXPLANATION OF COMPLETE VEHICLE MAINTENANCE SCHEDULE

Brief explanations of the services listed in the preceeding Maintenance Scheduled are presented below.
Replace all questionable parts and note any necessary repairs as you perform these maintenance procedures.

FRONT AND REAR AXLE LUBRICANT REPLACEMENT

Check the lubricant level after every 7,500 miles (12,000 km) of operation and add lubricant to level of filler hole if necessary.
Replace the front and rear axle lubricant at 15,000 miles (24,000 km) and 30,000 miles (48,000 km) and after every 30,000 miles (48,000 km) or operation thereafter.

MANUAL TRANSMISSION LUBRICANT REPLACEMENT

Check the lubricant level after every 7,500 miles (12,000 km) of operation and add lubricant to level of filler hole if necessary.
Replace the transmission lubricant at 15,000 miles (24,000 km) and 30,000 miles (48,000 km) and after every 30,000 miles (48,000 km) of operation thereafter.

TRANSFER CASE LUBRICANT REPLACEMENT

Check the lubricant level after every 7,500 miles (12,000 km) of operation and add lubricant to level of filler hole if necessary.
Replace the transfer case lubricant at 15,000 miles (24,000 km) and 30,000 miles (48,000 km) and after every 30,000 miles (48,000 km) of operation thereafter.

AIR CLEANER ELEMENT REPLACEMENT

Replace the air cleaner under normal operating conditions every 30,000 miles (48,000 km).
Operation of the vehicle in dusty areas will necessitate more frequent replacement.

SPARK PLUG REPLACEMENT

Replace the plugs at 30,000 mile (48,000 km) intervals with the type specified at the end of this section.

COOLING SYSTEM SERVICE

Drain, flush and refill system with new engine coolant. Refer to "Recommended Fluids and Lubricants" in this section, or ENGINE COOLING (SEC. 6B).

TIMING BELT REPLACEMENT

Replacement of the timing belt is recommended at every 60,000 miles (96,000 km).
Failure to replace the timing belt may result in serious damage to the engine.

TIRE ROTATION

Rotate tires every 7,500 miles (12,000 km).

POWER STEERING FLUID REPLACEMENT

Drain the power steering fluid and then refill the system to the proper level with power steering fluid after every 30,000 miles (48,000 km) of operation. See the appropriate section of this manual for further details.

FRONT WHEEL HUBS LUBRICANT REPLACEMENT

Clean and repack the front wheel bearings at 30,000 mile (48,000 km) intervals.
Clean and lubricate the free wheeling hubs at the same time the front wheel bearings are serviced.
Refer to FRONT DRIVING AXLE (SEC. 4C).

RADIATOR CORE AND AIR CONDITIONING CONDENSER CLEANING

Clean the front of the radiator core and air conditioning condenser, at 60,000 mile (96,000 km) intervals.

SPARK PLUG WIRE INSPECTION

Check the spark plug wires at 60,000 mile (96,000 km) intervals.

FLUID LEVEL CHECK

A fluid loss in any system (except windshield washer) may indicate a problem. Repair the system at once.

Engine oil level – Check level and add if necessary. The best time to check the engine oil level is when the oil is warm. After stopping the engine with the vehicle on a level surface, wait a few minutes for the oil to drain back to the oil pan. Pull out the oil level indicator (dipstick). Wipe it clean and push the oil level indicator back down all the way. Pull out the oil level indicator, keeping the tip down, and look at the oil level on it.

Add oil, if needed, to keep the oil level above the "ADD" mark and between the "ADD" and "FULL" marks in the operating range area. Avoid overfilling the engine since this may cause engine damage. Push the oil level indicator back down all the way after taking the reading.

If you check the oil level when the oil is cold, do not run the engine first. The cold oil will not drain back to the pan fast enough to give a true oil level.

Engine coolant level and condition – Check engine coolant level in the coolant reservoir and add engine coolant if necessary. Inspect the engine coolant and replace it if dirty or rusty.

Windshield washer fluid level – Check washer fluid level in reservoir and add if necessary.

Power steering system reservoir level – Check and keep at proper level.

Brake master cylinder reservoir level – Check fluid. Keep fluid at proper level. A low fluid level can indicate worn disc brake pads which may need to be serviced.

Hydraulic clutch system – Check fluid level in the reservoir. Add fluid as required.

Battery fluid level – Check fluid level in the battery.

FLUID LEAK CHECK

Check for fuel, water, oil or other fluid leaks by looking at the surface beneath the vehicle after it has been parked for a while. Water dripping from the air conditioning system after use is normal. If you notice gasoline fumes or fluid at any time, locate the source and correct it at once.

ENGINE OIL AND OIL FILTER REPLACEMENT

Always use API SE, SF, SG, SH or ILSAC GF-1 quality oils of the proper viscosity.

When choosing an oil, consider the range of temperatures the car will be operated in before the next oil change. Then, select the recommended oil viscosity from the chart (Fig. 0B-1).

Always change the oil and the oil filter as soon as possible after driving in a dust storm.

ENGINE COOLING SYSTEM INSPECTION

Inspect coolant/anti-freeze. If coolant is dirty or rusty, drain, flush and refill with new coolant. Keep coolant at the proper mixture for proper freeze protection, corrosion inhibitor level and best engine operating temperature. Inspect hoses and replace if cracked, swollen or deteriorated. Tighten hose clamps if equipped with screw-type clamps. Clean outside of radiator and air conditioning condenser. Wash filler cap and neck. To help ensure proper operation, a pressure test of both the cooling system and cap is also recommended.

EXHAUST SYSTEM INSPECTION

Visually inspect the exhaust pipes, muffler, heat shields and hangers for cracks, deterioration, or damage.

Be alert to any changes in the sound of the exhaust system or any smell of fumes. These are signs the system may be leaking or overheating. Repair the system at once, if these conditions exist. (See also "Engine Exhaust Gas Safety" and "Three Way Catalytic Converter" in Owner's manual.)

FUEL CAP, FUEL LINES, AND FUEL TANK INSPECTION

Inspect the fuel tank, the fuel cap and the fuel lines every 60,000 miles (96,000 km) for damage which could cause leakage.

Inspect the fuel cap and the gasket for correct sealing and physical damage. Replace any damaged parts.

DRIVE BELT INSPECTION

Check the belts driving the steering oil pump, the air conditioning compressor, and the generator for cracks, fraying, wear, and correct tension every 30,000 miles (48,000 km). Adjust or replace as necessary.

WHEEL ALIGNMENT, BALANCE AND TIRES OPERATION

Uneven or abnormal tire wear, or a pull right or left on a straight and level road may show the need for a wheel alignment. A vibration of the steering wheel or seat at normal highway speeds means a wheel balancing is needed. Check tire pressure when the tires are "cold" (include the spare).

Maintain pressure as shown in the tire placard, which is located on the driver's door lock pillar.

STEERING SYSTEM OPERATION

Be alert for any changes in steering action. An inspection or service is needed when the steering wheel is harder to turn or has too much free play, or if there are unusual sounds when turning or parking.

BRAKE SYSTEMS OPERATION

Watch for the "BRAKE" light coming on. Other signs of possible brake trouble are such things as repeated pulling to one side when braking, unusual sounds when braking or between brake applications, or increased brake pedal travel. If you note one of these conditions, repair the system at once.

For convenience, the following should be done when wheels are removed for rotation: Inspect lines and hoses for proper hookup, bindings, leaks, crack, chafing etc. Inspect disc brake pads for wear and rotors for surface condition.

Inspect other brake parts, including parking brake drums, linings etc., at the same time. Check parking brake adjustment.

Inspect brakes more often if habit or conditions result in frequent braking.

PARKING BRAKE AND TRANSMISSION PARK MECHANISM OPERATION

Park on a fairly steep hill and hold the vehicle with the parking brake only. This checks holding ability.

On automatic transmission vehicles, shifting from "P" position to the other positions cannot be made unless the brake pedal is depressed when the key switch is in "ON" position or the engine running.

WARNING

- Before checking starter safety switch operation below, be sure to have enough room around the vehicle. Then firmly apply both the parking brake and the regular brake. Do not use the accelerator pedal. If the engine starts, be ready to turn off the key promptly. Take these precautions because the vehicle could move without warning and possibly cause personal injury or property damage.

STARTER SAFETY SWITCH OPERATION (AUTOMATIC TRANSMISSION)

Check by trying to start the engine in each gear while setting the parking brake and the foot brake. The starter should crank only in "P" (Park) or "N" (Neutral).

STARTER SAFETY SWITCH OPERATION (MANUAL TRANSMISSION)

To check, place the shift lever in "Neutral", push the clutch pedal halfway and try to start. The starter should not crank. The starter should crank only when the clutch pedal is fully depressed.

ACCELERATOR LINKAGE LUBRICATION

Lubricate the accelerator pedal fulcrum pin with chassis grease.

STEERING AND SUSPENSION INSPECTION

Inspect front and rear suspension and steering system for damaged, loose or missing parts or signs of wear. Inspect power steering lines and hoses for proper hookup, binding, leaks, cracks, chafing, etc.

BODY AND CHASSIS LUBRICATION

Lubricate the key lock cylinders, the hood latch, the hood and door hinges, the door check link, the parking cable guides, the underbody contact points, and the linkage.

PROPELLER SHAFT INSPECTION AND LUBRICATION

Lubricate sliding yoke and universal joints with grease containing MOS2 (disulfide molybdenum type grease) at the interval shown in the Maintenance Schedule. Check for play in normal direction of rotation of sliding yoke and universal joints. Also check propeller shaft flange-to-pinion bolts for proper torque of 63 N·m (46 lb·ft) for front and rear propeller shaft.

AUTOMATIC TRANSMISSION FLUID INSPECTION

Check the lubricant level every 7,500 miles (12,000 km) and add lubricant if necessary.

Under harsh operating conditions, such as constant driving in heavy city traffic during hot weather, or in hilly or mountainous terrain, change the transmission fluid and service the sump filter after every 20,000 miles (32,000 km) of operation.

AUTO CRUISE CONTROL INSPECTION

Check to see if the clearance between cruise link and accelerator is normal. Also check that the vacuum hoses are routed and connected properly.

CLUTCH LINES AND HOSES INSPECTION

Check lines and hoses for proper attachment, binding, leaks, cracks, chafing, deterioration, etc. Any questionable parts should be replaced or repaired at once. When abrasion or wear is evident on lines or hoses, the cause must be corrected.

CLUTCH CONTROL LUBRICATION

Lubricate the clutch pedal bushing, the clevis pin, and pedal spring every 15,000 miles (24,000 km) or 6 months.

If a squeaking noise arises from around the bushing or the clevis pin at the clutch pedal arm when the clutch pedal is depressed, lubricate them.

CLUTCH PEDAL FREE PLAY INSPECTION

Note the clutch pedal free play. It should be 5 – 15 mm (0.2 – 0.6 in). Adjust clutch control when there is little or no free play.

ACCELERATOR LINKAGE INSPECTION

Inspect for interference, binding, and damaged or missing parts. Check accelerator pedal for smooth operation and even pedal effort. Replace parts as needed.

RECOMMENDED FLUIDS AND LUBRICANTS

USAGE	FLUID/LUBRICANT
Engine	API SE, SF, SG, SH or ILSAC GF-1 Engine oil (See oil chart on the following page for proper viscosity)
Engine coolant	Mixture of water and good quality ethylene glycol base type antifreeze.
Brake system	DOT-3 hydraulic brake fluid.
Power steering system	DEXRON® II-E Automatic transmission fluid.
Automatic transmission	DEXRON®- III Automatic transmission fluid.
Manual transmission	Engine oil (See oil chart on following page for proper viscosity)
Rear axle and front axle	GL-5 gear lubricant (Standard differential) GL-5 Limited slip differential gear lubricant (If equipped with optional limited slip differential) (See oil chart in this section for proper viscosity)
Clutch system a. Pivot points b. Clutch fork joint c. Master cylinder	 Engine oil Chassis grease DOT-3 hydraulic brake fluid
Hood latch assembly a. Pivots and spring anchor b. Release pawl	 Engine oil Chassis grease
Hood and door hinges	Engine oil
Chassis lubrication	Chassis greae
Parking brake cables	Chassis grease
Front wheel bearings	Wheel bearing grease
Free Wheeling hubs (Automatic)	Specified grease (available as service parts)
Propeller shafts Sliding yoke and Universal joint	 Grease containing MoS_2 or multipurpose type grease NLGI No.2
Body door hinge pins and linkage, fuel door hinge, rear compartment lid hinges	Engine oil
Windshield washer solvent	Washer fluid
Key lock cylinder	Engine oil
Accelerator linkage	Chassis grease

LUBRICANT VISCOSITY CHART

Lubricants should be carefully selected according to the lubrication chart. It is also important to select viscosity of lubricants according to the ambient temperature by referring to the following table.

OIL VISCOSITY CHART FOR GASOLINE ENGINE

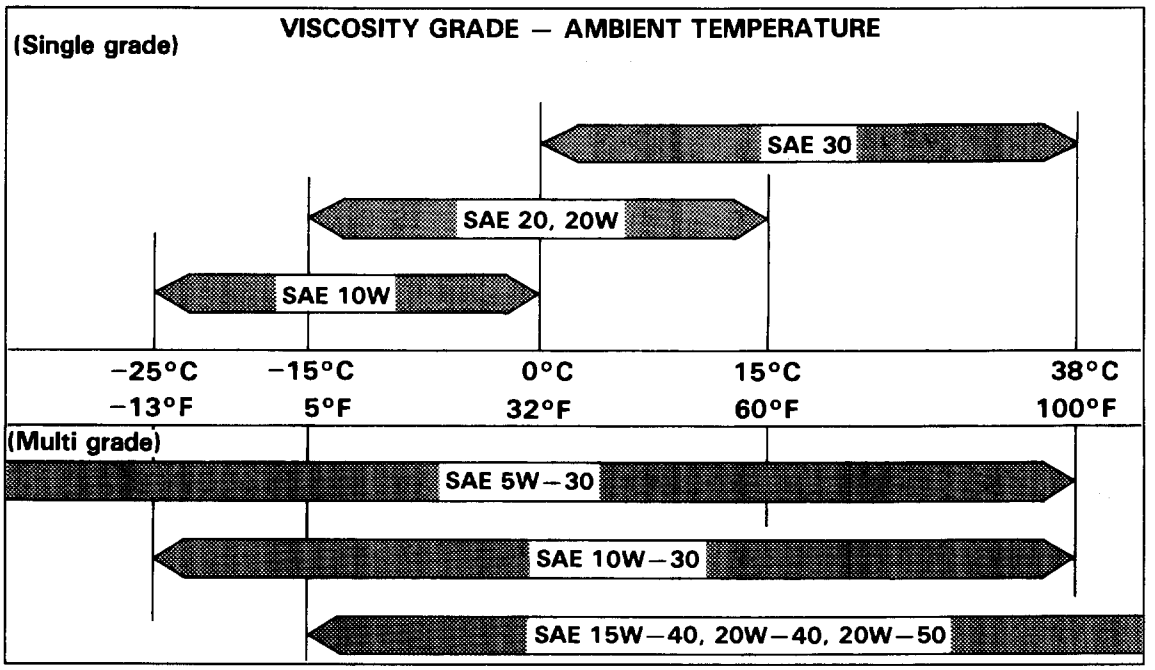

Fig. 0B-1

OIL VISCOSITY CHART FOR MANUAL TRANSMISSION AND TRANSFER CASE

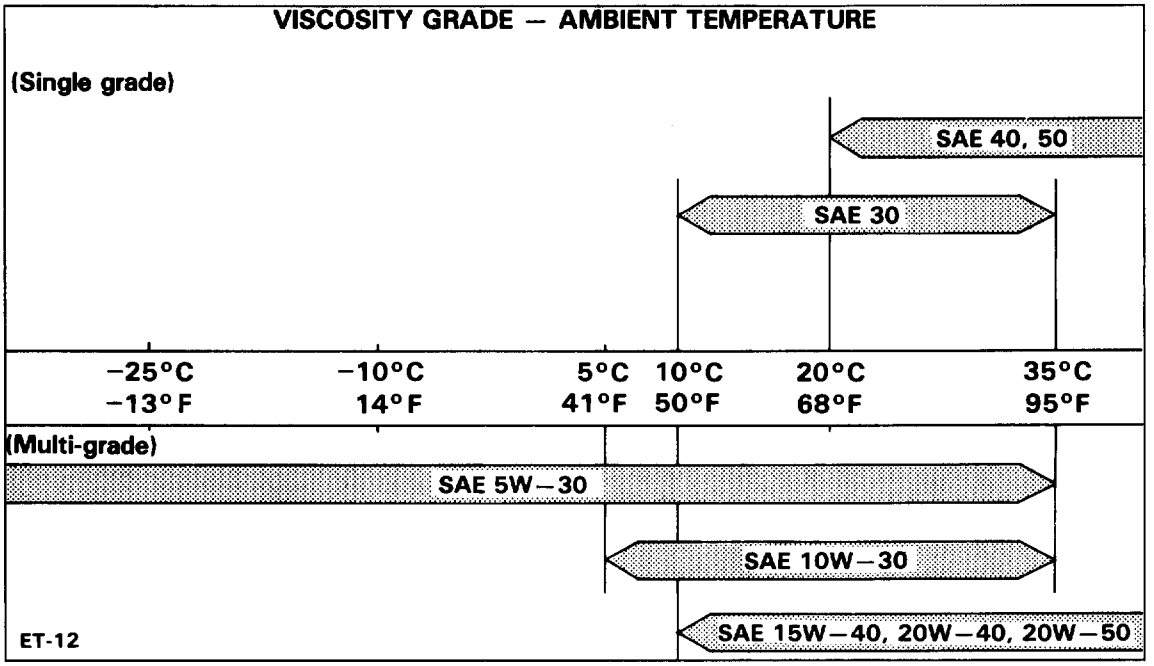

Fig. 0B-2

OIL VISCOSITY CHART FOR FRONT AXLE AND REAR AXLE

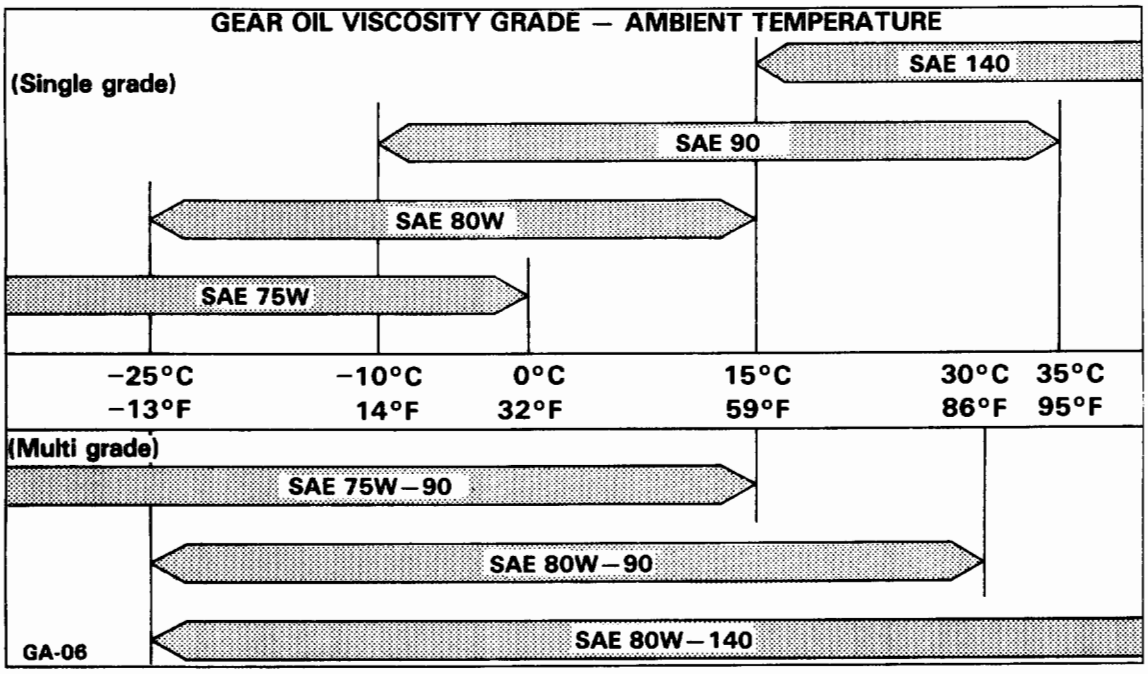

Fig. 0B-3

RECOMMENDED LIQUID GASKET

Type	Brand Name	Manufacturer	Remarks
RTV* Silicon Base	Three Bond 1207B Three Bond 1207C Three Bond 1215 Three Bond 1280	Three Bond Three Bond Three Bond Three Bond	For Engine Repairs For Axle Case Repairs. T/M
Water Base	Three Bond 1141E	Three Bond	For Engine Repairs
Solvent	Three Bond 1104 Belco Bond 4 Belco Bond 401 Belco Bond 402	Three Bond Isuzu Isuzu Isuzu	For Engine Repairs
Anaerobic	LOCTITE 515 LOCTITE 518 LOCTITE 17430	Loctite Loctite Loctite	All

* RTV: Room Temperature Vulcanizer

NOTE:

1. It is very important that the liquid gaskets listed above or their exact equivalent be used on the vehicle.
2. Be careful to use the specified amount of liquid gasket.
   Follow the manufacturer's instructions at all times.
3. Be absolutely sure to remove all lubricants and moisture from the connecting surfaces before applying the liquid gasket.
   The connecting surfaces must be perfectly dry.
4. Do not apply LOCTITE 17430, LOCTITE 515 and LOCTITE 518 between two metal surfaces having a clearance of greater than 0.25 mm (0.01 in). Poor adhesion will result.

RECOMMENDED THREAD LOCKING AGENTS

LOCTITE Type	LOCTITE Color	Application Steps
LOCTITE 242	Blue	1. Completely remove all lubricant and moisture from the bolts and the female-threaded surfaces of the parts to be joined. The surfaces must be perfectly dry. 2. Apply LOCTITE to the bolts. 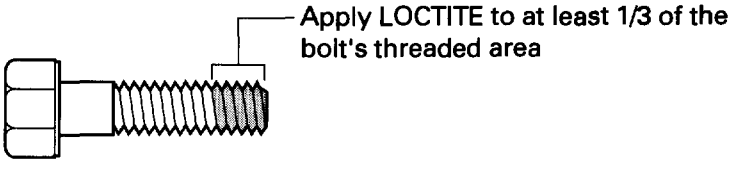 3. Tighten the bolts to the specified torque. After tightening, be sure to keep the bolts free from vibration and torque for at least an hour until LOCTITE hardens.
LOCTITE 262	RED	
LOCTITE 271	Red	

NOTE: When the application procedures are specified in this manual, follow them.

MAINTENANCE SERVICE DATA

SERVICE DATA AND SPECIFICATIONS

ENGINE		
• Valve clearance	Zero (Hydraulic adjuster)	
• Spark plug type	FR2LS, BKR6E-11, K20PR-U11 or equivalent	
• Spark plug gap	1.05 mm (0.04 in)	
• Drive belt tension	‹Initial›	‹Readjust›
(with a belt tension gage) Generator belt	170—190 lb	100—120 lb
P/S pump belt	70—110 lb	70—110 lb
A/C compressor belt	100—140 lb	80—120 lb
CLUTCH		
• Clutch pedal free play	5 — 15 mm (0.20 — 0.59 in)	
BRAKE		
• Brake pedal free play	6 — 10 mm (0.24 — 0.39 in)	
• Parking brake travel	6 — 7 notches	
WHEEL ALIGNMENT		
• Toe-in	0 ± 2 mm (0 ± 0.08 in)	
• Camber	0° ± 30′	
• Caster	2° 10′ ± 45′ (Long wheel base model)	
	2° 00′ ± 45′ (Short wheel base model)	
PROPELLER SHAFT		
• Flange torque	63 N·m (46 lb·ft)	
WHEEL AND TIRES		
• Wheel nut torque	118 N·m (87 lb·ft)	
*• Tire inflation pressure Front	210 kPa (30 psi)	
Rear	240 kPa (35 psi)	

* Unless otherwise specified on tire information label on vehicle.

APPROXIMATE CAPACITIES

Items	Metric Measure	U.S. Measure
Fuel tank	85L	22.5 Gal.
* **Crankcase**		
Oil Change with Filter	5.4L	5.7 Qt
Oil Change without Filter	4.7L	5.0 Qt
Coolant M/T	8.8L	9.3 Qt
A/T	8.5L	9.0 Qt
Transmission		
Manual	2.95L	3.1 Qt
Automatic	8.6L	9.1 Qt
Transfer	1.45L	1.5 Qt
Axle		
Rear	1.8L	1.9 Qt
Front	1.5L	1.6 Qt
Power steering	1.0L	1.1 Qt
Air conditioning (R-134a)	0.75kg	1.65 lb

* Crankcase capacities shown are approximate refill capacities.
After refill, recheck oil level.

MEMO

HEATING AND AIR CONDITIONING

CONTENTS

Heating and Ventilation ..... Section 1A
Air Conditioning ..... Section 1B
Compressor Overhaul ..... Section 1D

SECTION 1A

HEATING AND VENTILATION

CONTENTS

General Description 1A– 2
Heater 1A– 2
Control Lever Assembly 1A– 3
Ventilation 1A– 3
Air Select Knob 1A– 4
Air Source Select Lever 1A– 4
Fan Control Knob 1A– 4
Temperature Control Knob 1A– 4
Wiring Diagram 1A– 5
Diagnosis 1A– 6
Heating Cycle Diagnosis 1A– 6
Fan Control Lever (Fan Switch) Diagnosis 1A– 7
Individual Inspection 1A–10
On-Vehicle Service 1A–11
Heater Unit 1A–11
Heater Core and/or Mode Door 1A–12
Heater Mode Control Link Unit 1A–14
Heater Temperature Control Link Unit ... 1A–15
Blower Assembly 1A–16
Blower Link Unit and/or Mode Door 1A–17
Blower Motor 1A–18
Rear Heater Duct, Defroster Nozzle and Ventilation Duct 1A–19
Center and/or Driver Side Vent 1A–20
Control Lever Assembly and/or Control Cables 1A–21
Control Panel Illumination Bulb 1A–23
Resistor 1A–23

GENERAL DESCRIPTION

HEATER

When the engine warming up, the warmed engine coolant is sent out into the heater core. The heater system supplies warm air into the passenger compartment to warm it up.

Outside air is circulated through the heater core of the heater unit and then back into the passenger compartment. By controlling the mixture of outside air and heater core air, the most comfortable passenger compartment temperature can be selected and maintained.

The temperature of warm air sent to the passenger compartment is controlled by the temperature control knob. This knob acts to open and close the air mix door, thus controlling the amount of air passed through the heater core.

The air selector knob, with its different modes, also allows you to select and maintain the most comfortable passenger compartment temperature.

The air source select lever is used to select either "FRESH" for the introduction of the outside air, or "CIRC" for the circulation of the inside air. When the lever is set to "FRESH", the outside air is always taken into the passenger compartment. When setting the lever to "CIRC" position, the circulation of air is restricted only to the inside air with no introduction of the outside air and the air in the passenger compartment gets warm quickened. However, the lever is normally set to "FRESH" to prevent the windshield from clouding.

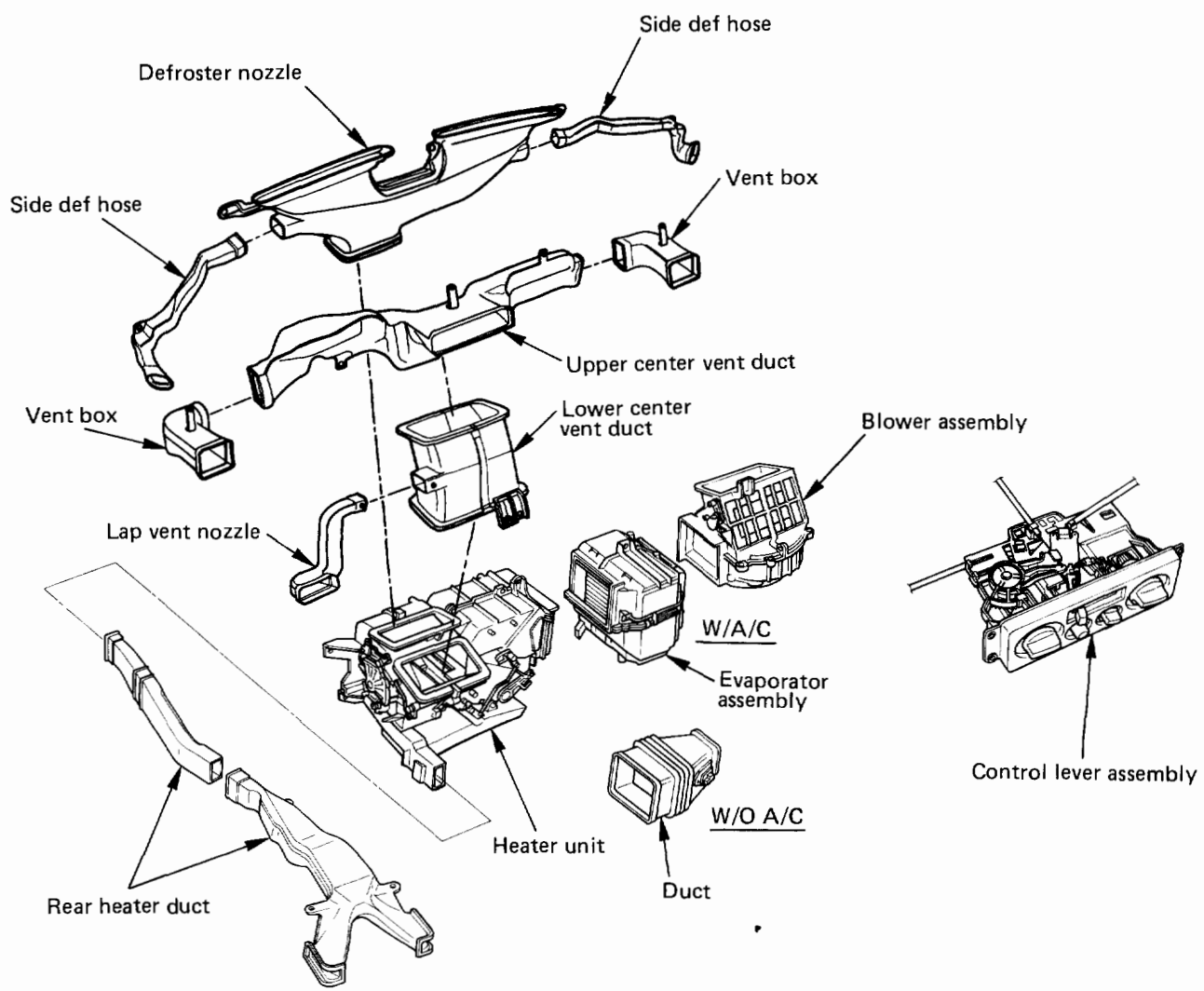

A/C - Air Conditioning

Fig. 1A-1

CONTROL LEVER ASSEMBLY

The vehicle has cable-control-type to control by cable the mode and temperature of the heater unit and the mode door for the air source of the blower assembly.

The fan control is used to control the amount of air sent out by the registor at four levels from "LOW" to "HIGH".

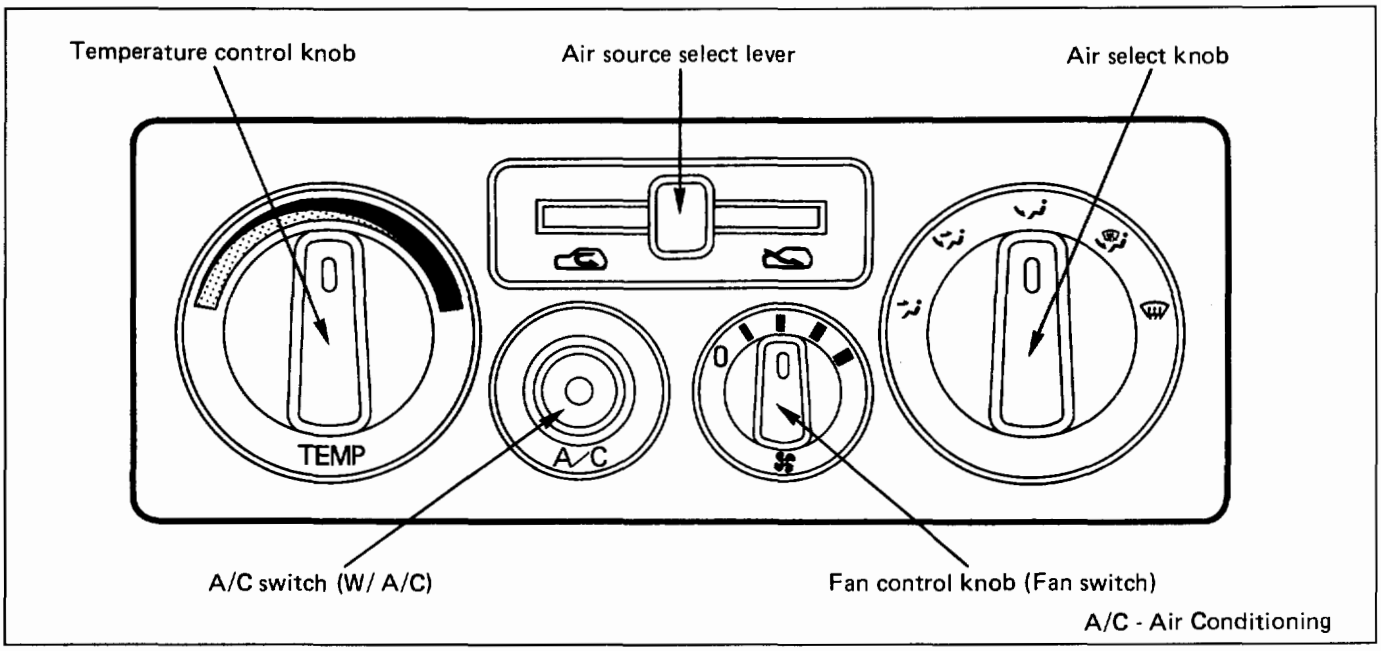

Fig. 1A-2

VENTILATION

Set "AIR SOURCE SELECT LEVER" to "FRESH" position and turn on the blower fan. Heating can be done in this lever position, sending in fresh air from outside.

The blower fan also serves to deliver fresh outside air to the vehicle interior to assure adequate ventilation.

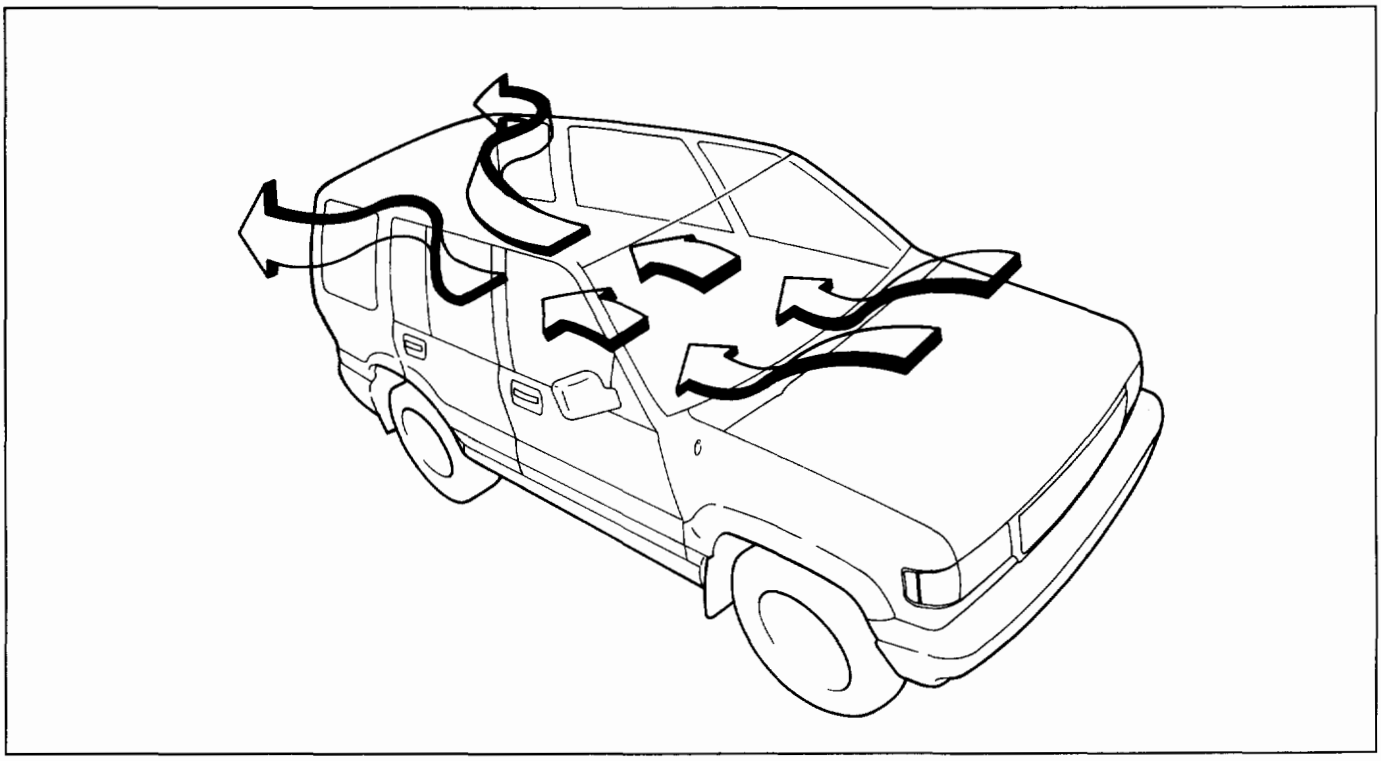

Fig. 1A-3

AIR SELECT KNOB

The air select knob allows you to direct heated air into the passenger compartment through different outlets (Fig. 1A-4).

1. **Vent** - In this position, air is discharged from the upper air outlet. Air quantity is controlled by the fan control knob.
2. **Bi-Level** - In this position, air flow is divided between the upper air outlets and the floor air outlets, with warmer air delivered to the floor outlets than the air delivered to the upper air outlets.
3. **Foot** - In this position, air flow is delivered to the foot only.
4. **Def/Foot** - In this position, air flow is delivered to the foot, while sending approx. 30% of total amount of air to the windshield.
5. **Defrost** - In this position, most of the air is delivered to the windshield and a small amount is delivered to the side windows.

Moving the air source select lever to the "CIRC" position provides quickest heat delivery by closing the blower assembly mode door. In this position, outside air is not delivered to the passenger compartment.

AIR SOURCE SELECT LEVER

The intake of outside air and the circulation of inside air are controlled by sliding this lever left or right.

FAN CONTROL KNOB

This knob controls the blower motor speed to regulate the amount of air delivered to the defrost, foot, and ventilation ducts:

1. Low
2. Medium Low
3. Medium High
4. High

TEMPERATURE CONTROL KNOB

When the temperature control knob is in the "COLD" position, the air mix door closes to block the flow of air to the heater core.

When the temperature control knob is in the "HOT" position, the air mix door opens to allow air to pass through the heater core and heat the passenger compartment.

Placing the knob in an intermediate position will cause a lesser or greater amount of air to reach the heater core. In this mode the passenger compartment temperature can be regulated.

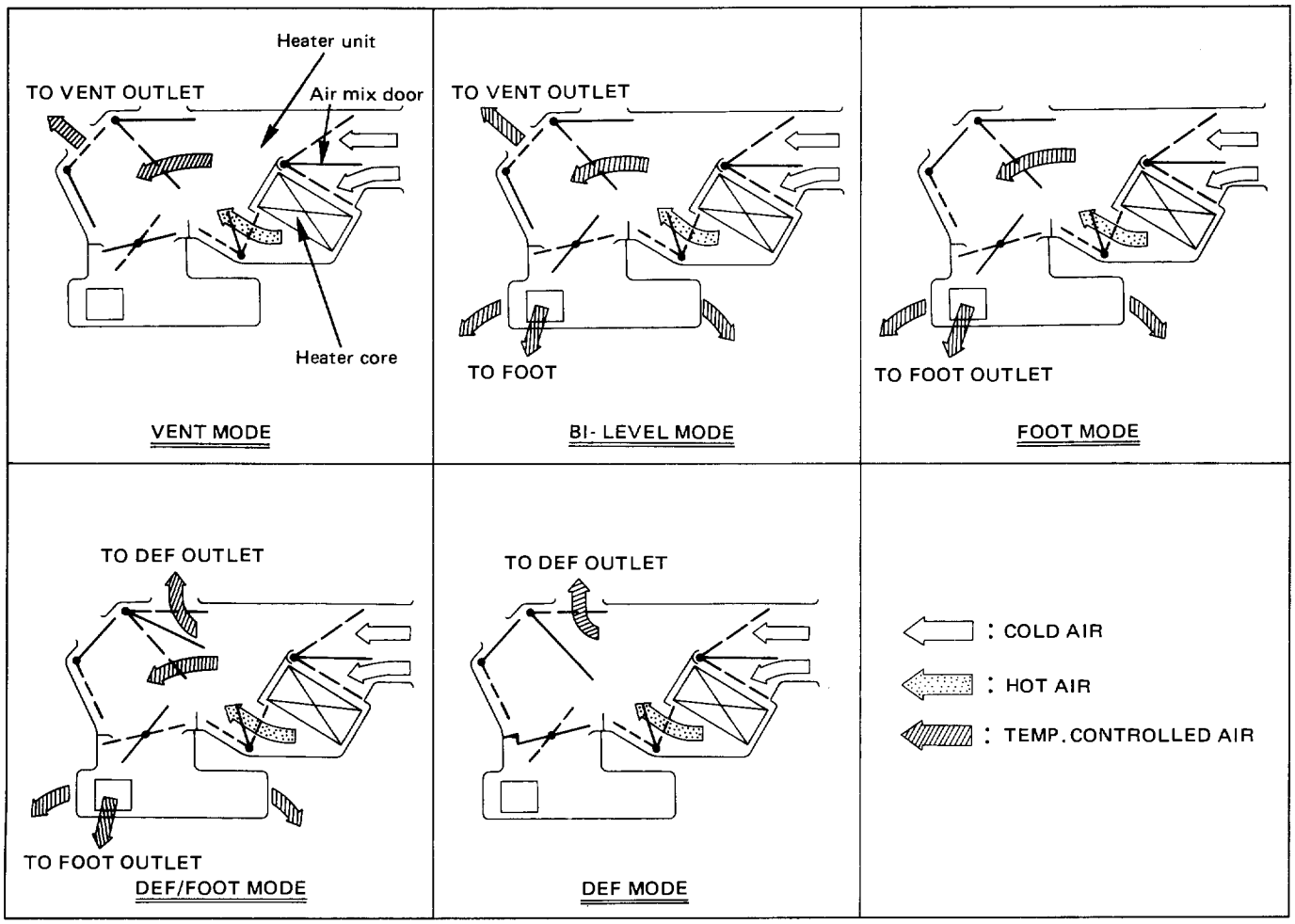

Fig. 1A-4

WIRING DIAGRAM

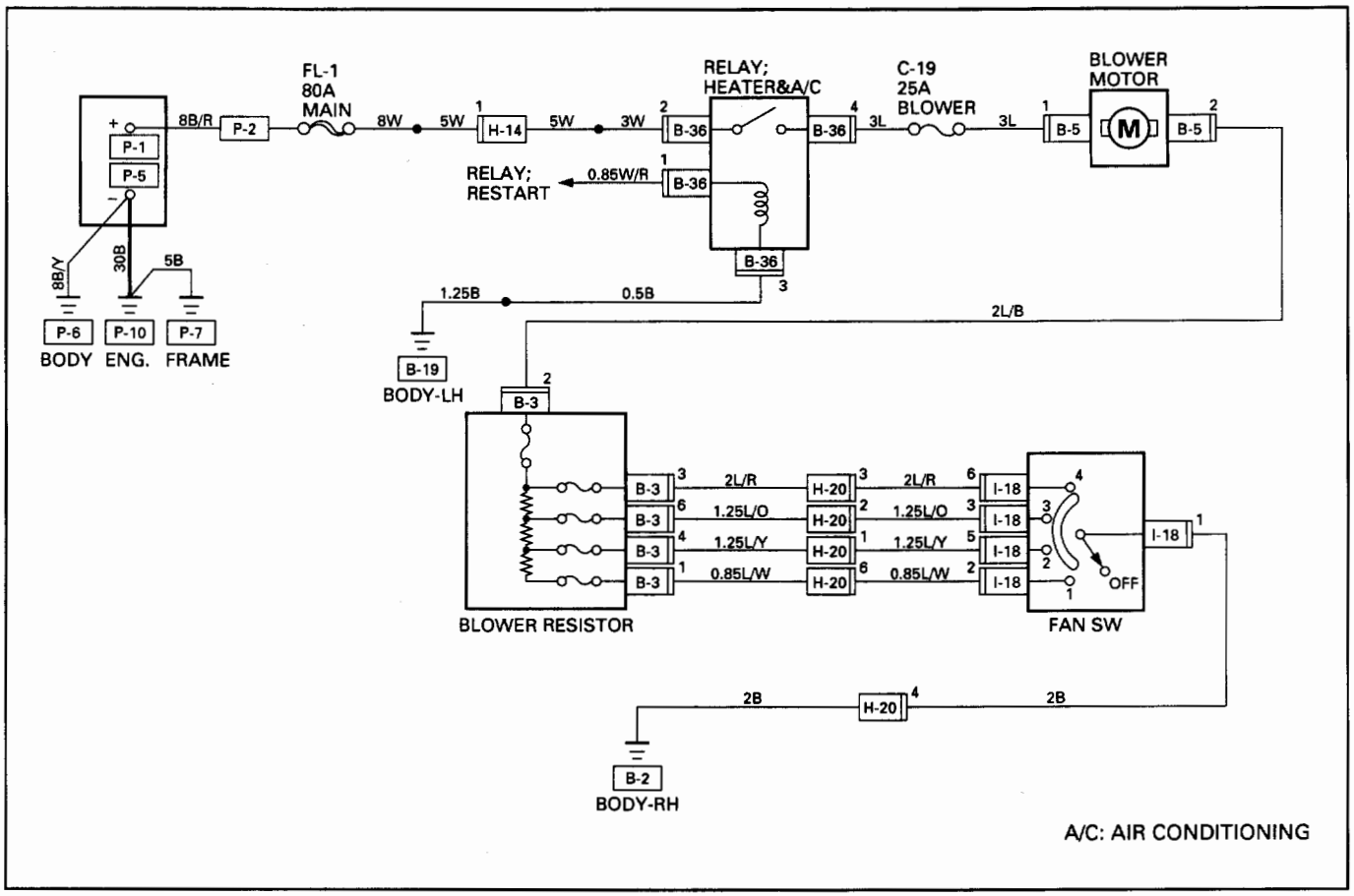

Fig. 1A-5

DIAGNOSIS

HEATING CYCLE DIAGNOSIS

TROUBLE	POSSIBLE CAUSE	CORRECTION
No heating or Insufficient heating.	1. Blower motor does not run, or runs inproperly. 2. Engine coolant temperature is low. 3. Insufficient engine coolant. 4. Circulation volume of engine coolant is insufficient. 5. Heater core clogged or collapsed. 6. The heater core is not provided with air sent from the blower motor. 7. Duct connections defective or unsealing.	• Refer to "FAN CONTROL KNOB (FAN SWITCH) DIAGNOSIS". • Check the engine coolant temperature after warming up the engine and check the thermostat. Replace as necessary. • Add engine coolant as required. • Check if the water hose to the heater core is clogged, collapsed or twisted. Repair or replace as necessary. • Check water pump function. Repair or replace as necessary. • Clean or replace as necessary. • Repair the temperature control link unit or mode doors. • Repair or adjust the control cables. • Repair or replace as necessary.
Control lever moves but mode door does not operate.	1. Cable attaching clip is not correct. 2. Link unit of heater unit or blower assembly defective.	• Repair. • Repair.
The mode door cannot be sent to the mode selected.	1. Link unit of heater unit or blower assembly defective. 2. Control cable is not adjustment.	• Repair. • Adjust.

FAN CONTROL LEVER (FAN SWITCH) DIAGNOSIS

Current flows to the blower motor through the heater & A/C relay (B-36) to activate the rotation of the blower motor by turning "ON" the fan control knob (fan switch). Blower motor speed is controlled in stages by the resistor, by operating the switch from "LOW" to "HIGH."

For the inspection of the relays, switches and units in each flow chart, refer to "INDIVIDUAL INSPECTION" in this section.

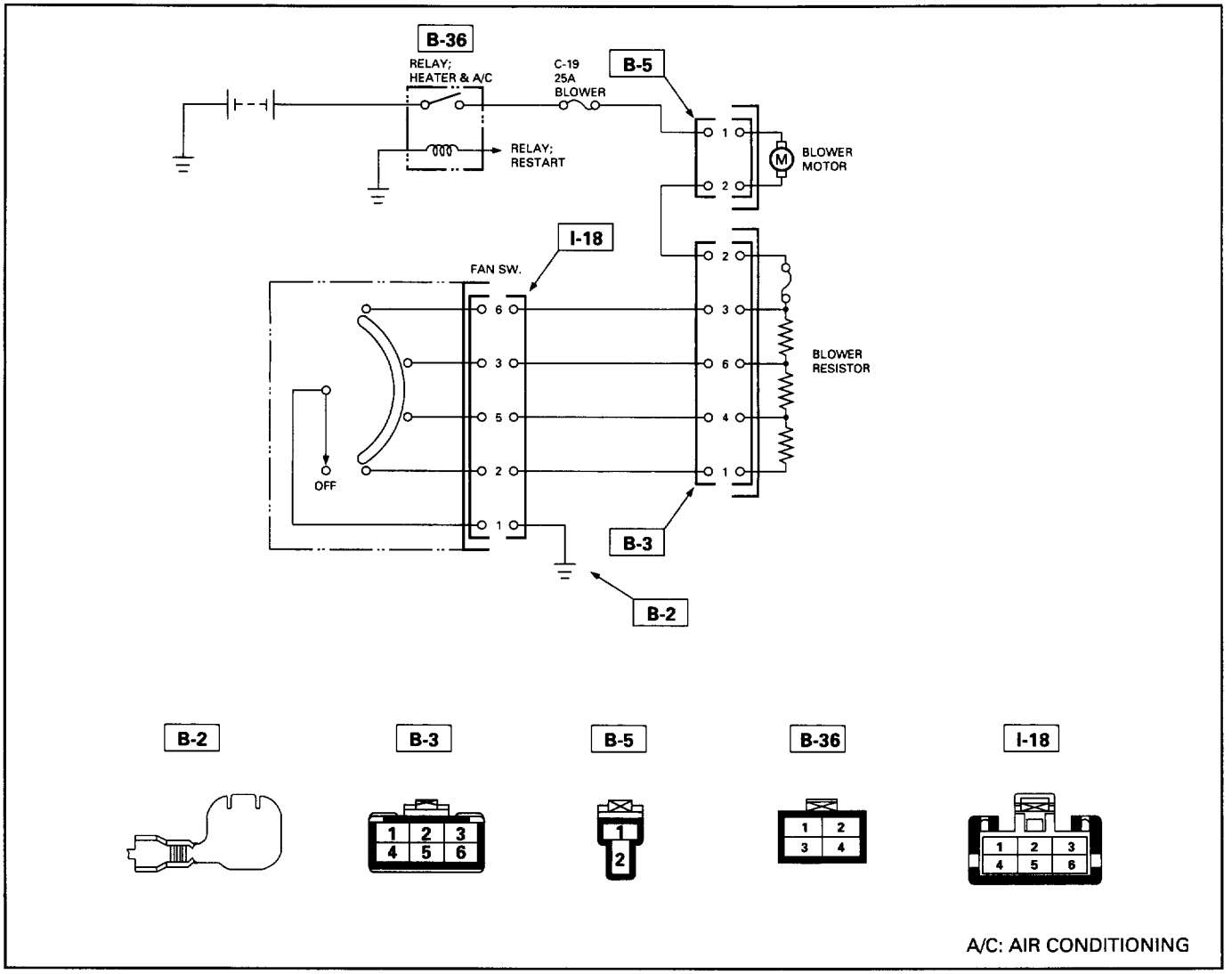

Fig. 1A-6

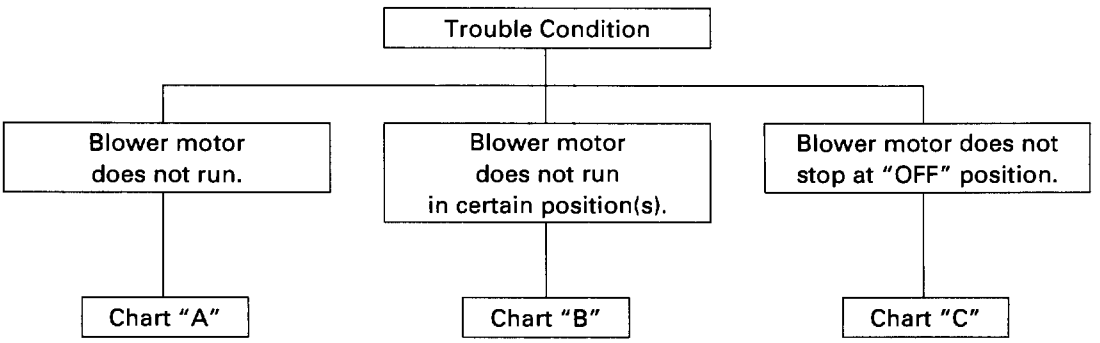

CHART "A"

BLOWER MOTOR DOES NOT RUN

- IS RELAY (B-36) OK?
  - YES → IS NO. C-19 (25A) FUSE OK?
  - NO → REPLACE
- IS NO. C-19 (25A) FUSE OK?
  - YES → IS RESISTOR OK?
  - NO → REPLACE
- IS RESISTOR OK?
  - YES → IS FAN CONTROL KNOB (FAN SWITCH) OK?
  - NO → REPLACE
- IS FAN CONTROL KNOB (FAN SWITCH) OK?
  - YES → IS BLOWER MOTOR OK?
  - NO → REPLACE CONTROL LEVER ASSEMBLY
- IS BLOWER MOTOR OK?
  - YES → TURN THE IGNITION SWITCH "ON" (ENGINE IS RUNNING)
    - FAN CONTROL KNOB (FAN SWITCH) "ON"
  - NO → REPLACE
- TURN THE IGNITION SWITCH "ON" (ENGINE IS RUNNING)
  - FAN CONTROL KNOB (FAN SWITCH) "ON"
- CHECK TO SEE IF BATTERY VOLTAGE IS PRESENT AT CHASSIS SIDE CONNECTOR TERMINAL NO. B5-1
  - YES → POOR GROUND OR OPEN CIRCUIT EITHER BETWEEN CHASSIS SIDE CONNECTOR TERMINAL NO. B5-2 AND NO. B3-2 OR NO. I18-1 AND BODY GROUND (NO. B-2)
  - NO → OPEN CIRCUIT BETWEEN NO. C-19 (25A) FUSE AND NO. B5-1

CHART "B"

BLOWER MOTOR DOES NOT RUN IN CERTAIN POSITION

BLOWER MOTOR DOES NOT RUN AT
- **Ⓐ 1 : (LOW)**
- **Ⓑ 2 : (MEDIUM LOW)**
- **Ⓒ 3 : (MEDIUM HI)**
- **Ⓓ 4 : (HIGH)**

POSITION

*** CHECKING IS PERFORMED ONLY WHEN IN THE MALFUNCTION MODE.**

- IS RESISTOR OK?

YES

- IS FAN CONTROL KNOB (FAN SWITCH) OK?

YES

Ⓐ CONDITION:
- OPEN CIRCUIT BETWEEN CHASSIS SIDE CONNECTOR TERMINAL NO. B3-1 AND NO. I18-2

Ⓑ CONDITION:
- OPEN CIRCUIT BETWEEN CHASSIS SIDE CONNECTOR TERMINAL NO. B3-4 AND NO. I18-5

Ⓒ CONDITION:
- OPEN CIRCUIT BETWEEN CHASSIS SIDE CONNECTOR TERMINAL NO. B3-6 AND NO. I18-3

Ⓓ CONDITION:
- OPEN CIRCUIT BETWEEN CHASSIS SIDE CONNECTOR TERMINAL NO. B3-3 AND NO. I18-6

NO

REPLACE

NO

REPLACE CONTROL LEVER ASSEMBLY

CHART "C"

BLOWER MOTOR DOES NOT STOP AT "OFF" POSITION

- IS FAN CONTROL KNOB (FAN SWITCH) OK?

YES

SHORT CIRCUIT BETWEEN CHASSIS SIDE CONNECTOR TERMINAL
- NO. B5-2 AND NO. B3-2
  (OR)
- NO. B3-3 AND NO. I18-6
  (OR)
- NO. B3-6 AND NO. I18-3
  (OR)
- NO. B3-4 AND NO. I18-5
  (OR)
- NO. B3-1 AND NO. I18-2

NO

REPLACE CONTROL LEVER ASSEMBLY

INDIVIDUAL INSPECTION

BLOWER MOTOR (Fig. 1A-7)

1. Disconnect the blower motor (B-5) connector from the blower motor.
2. Connect the battery positive terminal to the No. 1 terminal of the blower motor and negative to the No. 2.
3. Be sure to check to see if the blower motor operates correctly.

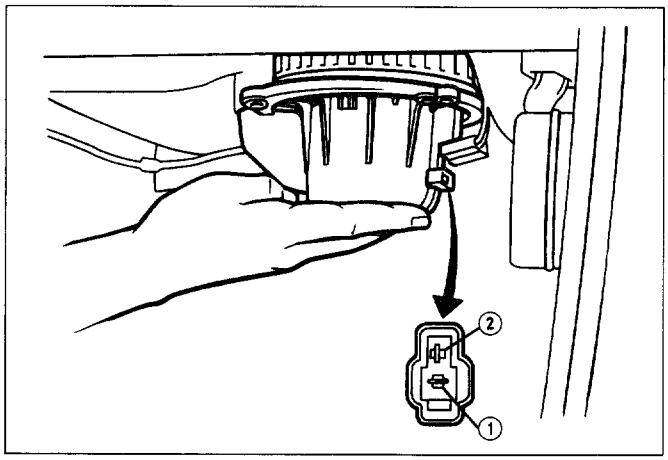

Fig. 1A-7

RESISTOR (Fig. 1A-8)

1. Disconnect resistor (B-3) connector.
2. Check for continuity and resistance between the terminals of the resistor.

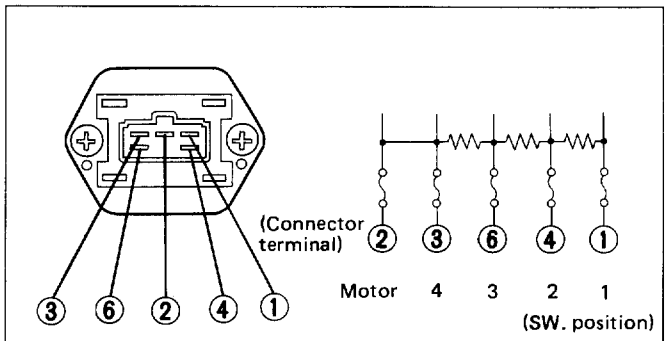

SW position \ Terminal No.	1	2	3	4	6	Normal Operating Resistance
1	○—○					2.4Ω
2		○	——	○		0.90Ω
3		○	——	——	○	0.28Ω
4		○—○				—

Fig. 1A-8

FAN CONTROL KNOB (FAN SWITCH) (Fig. 1A-9)

1. Check for continuity between the terminals of the fan switch.

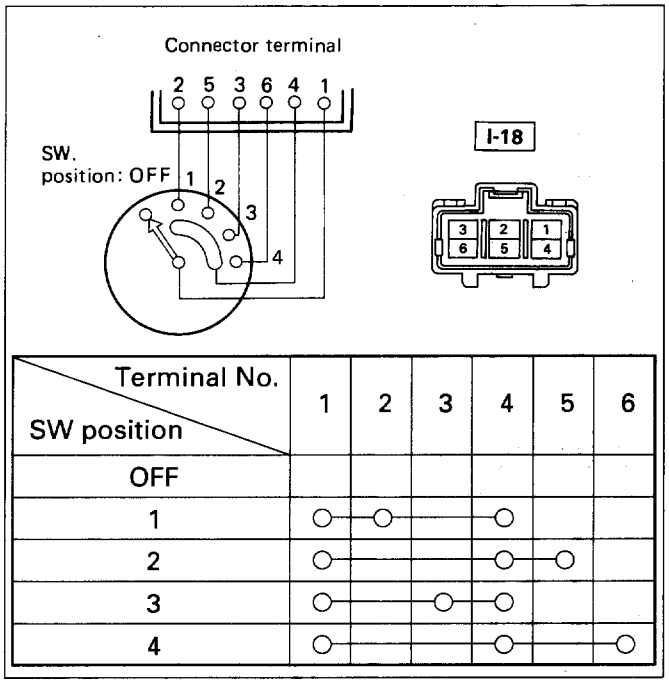

SW position \ Terminal No.	1	2	3	4	5	6
OFF						
1	○—○		——	○		
2	○	——	——	○	○	
3	○	——	○	○		
4	○	——	——	○	——	○

Fig. 1A-9

HEATER & A/C RELAY

1. Disconnect heater & A/C relay (B-36).
   - When removing the connector for relay, unfasten the tang lock of the connector by using a screwdriver, then pull the relay out (Fig. 1A-10).

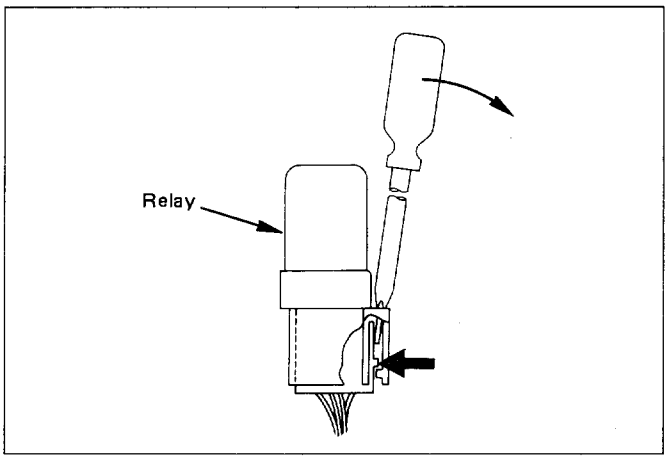

Fig. 1A-10

2. Check for continuity between heater & A/C relay (B-36) terminals (Fig. 1A-11).

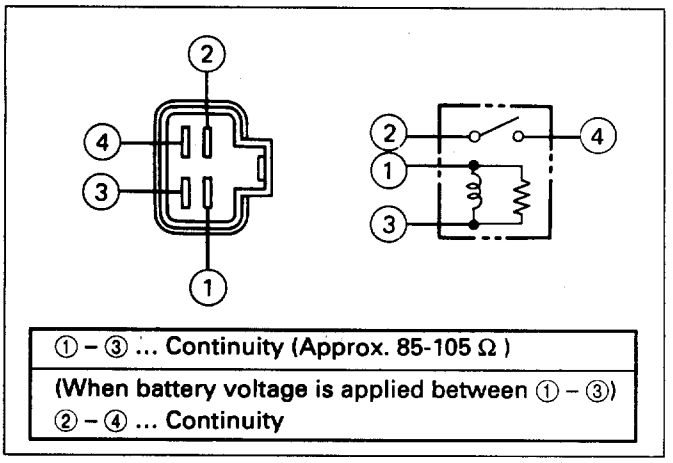

Fig. 1A-11

ON-VEHICLE SERVICE

HEATER UNIT

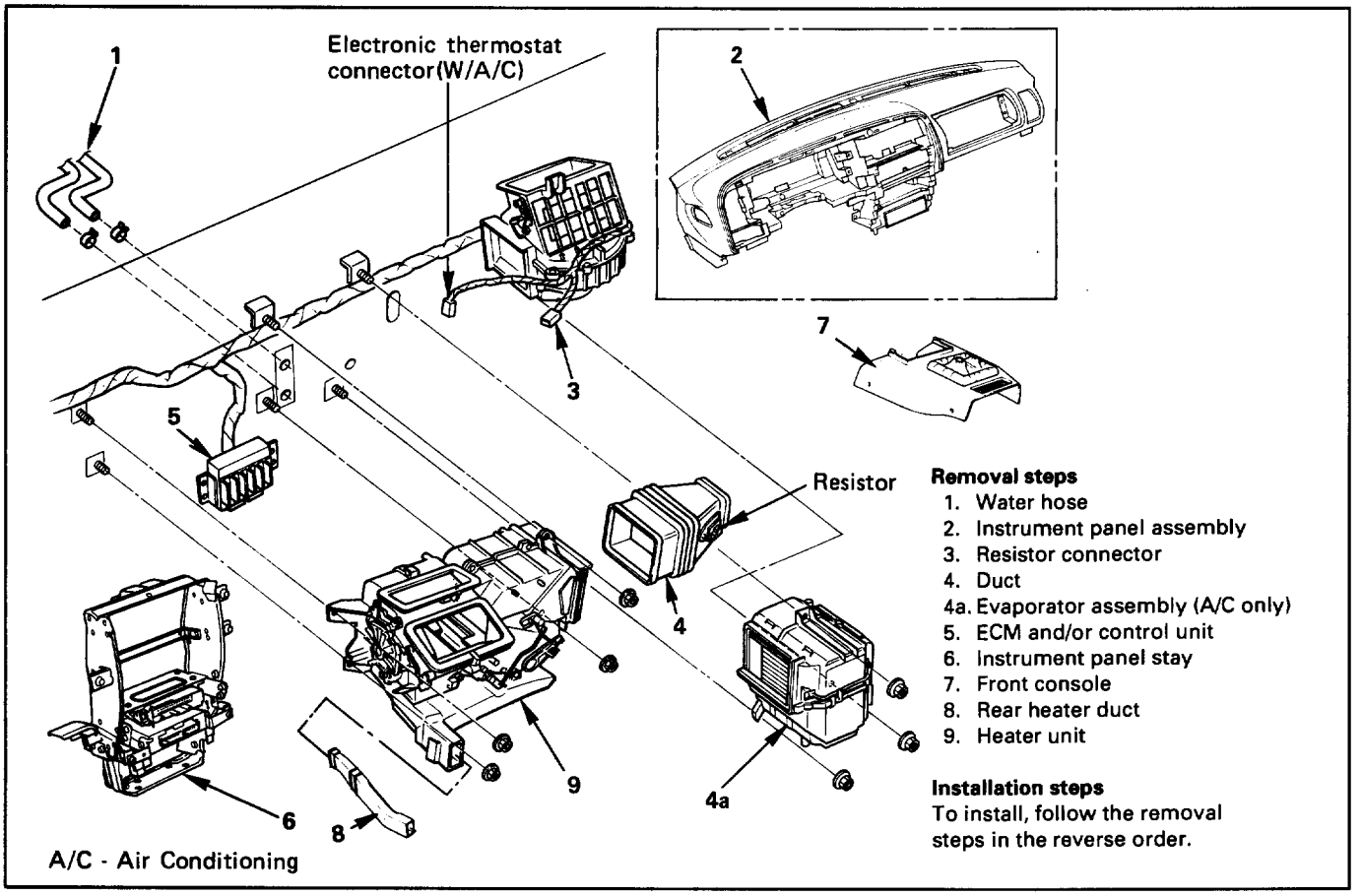

Fig. 1A-12

REMOVAL

Preparation:

Disconnect the battery ground cable
Drain engine coolant
Discharge and recover refrigerant (W/Air conditioning)
(Refer to Section 1B "REFRIGERANT RECOVERY")

1. **Water hose**
   - Disconnect water hoses at heater unit.
2. **Instrument panel assembly**
   - Refer to Section 10 "BODY" for INSTRUMENT PANEL ASSEMBLY removal procedure.
3. **Resistor connector**
4. **Duct**

4a. Evaporator assembly
- Refer to Section 1B "AIR CONDITIONING" for Evaporator Assembly removal procedure.

5. ECM and/or control unit
- Do not disconnect ECM and control unit connectors.

6. Instrument panel stay

7. Front console

8. Rear heater duct

9. Heater unit

INSTALLATION

To install, follow the removal steps in the reverse order, noting the following points:

1. When handling the ECM and the control unit, be careful not to make any improper connection of the connectors.
2. Adjust control lever assembly cables.
   - Refer to "CONTROL LEVER ASSEMBLY" installation steps in this section.
3. When installing the heater unit, defroster nozzle and center vent duct, be sure that proper seal is made, without any gap between then.

HEATER CORE AND/OR MODE DOOR

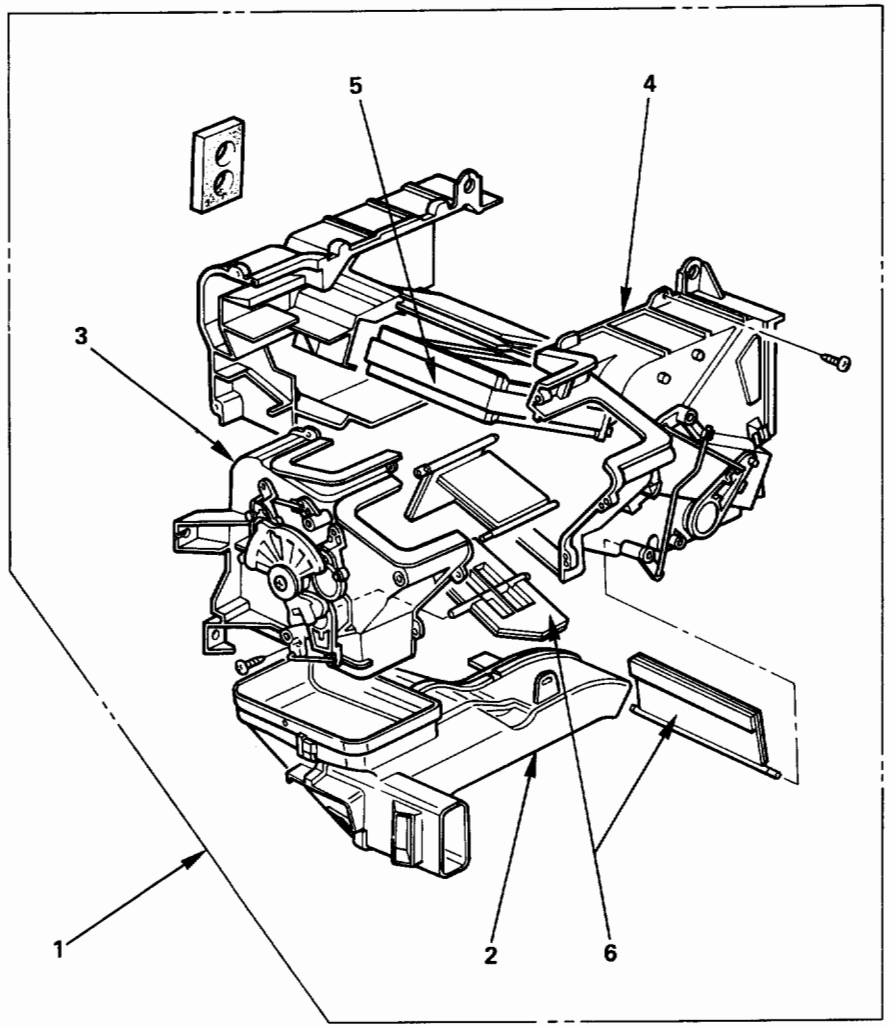

Removal steps
1. Heater unit
2. Duct
3. Case (Mode control)
4. Case (Temperature control)
5. Heater core
6. Mode door

Installation steps
To install, follow the removal steps in the reverse order.

Fig. 1A-13

REMOVAL

Preparation:

Disconnect the battery ground cable
Drain engine coolant

1. **Heater unit**
   - Refer to "HEATER UNIT" removal procedure in this section.
2. **Duct**
3. **Case (Mode control)**
   - Do not remove link unit at this step.
4. **Case (Temperature control)**
   - Separate two halves of core case (Fig. 1A- 14).

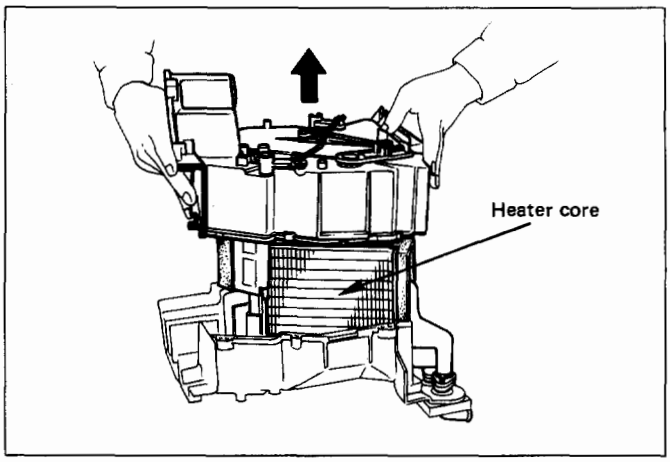

Fig. 1A-14

5. **Heater core (Fig. 1A-15)**

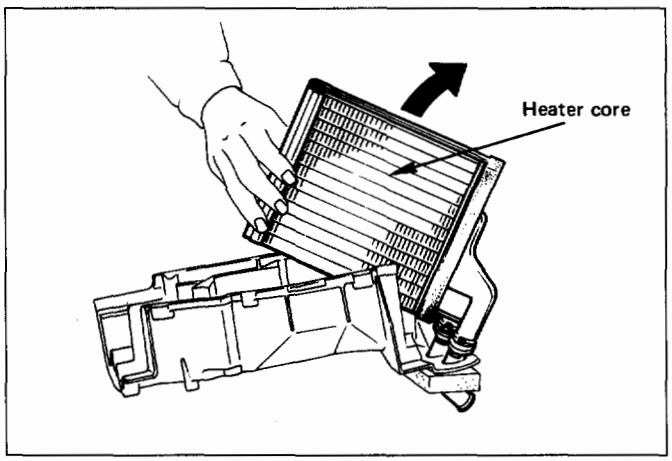

Fig. 1A-15

6. **Mode door**
   - Pull out the mode door while raising up the catch of the door lever (Fig. 1A-16).

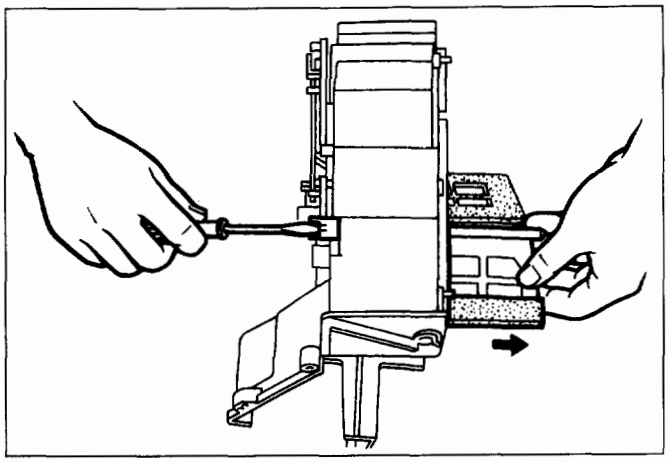

Fig. 1A-16

INSPECTION

Check for foreign matter in the heater core, stain or the core fin defacement.

INSTALLATION

To install, follow the removal steps in the reverse order, noting the following point:

1. Check that each mode door operates properly.

HEATER MODE CONTROL LINK UNIT

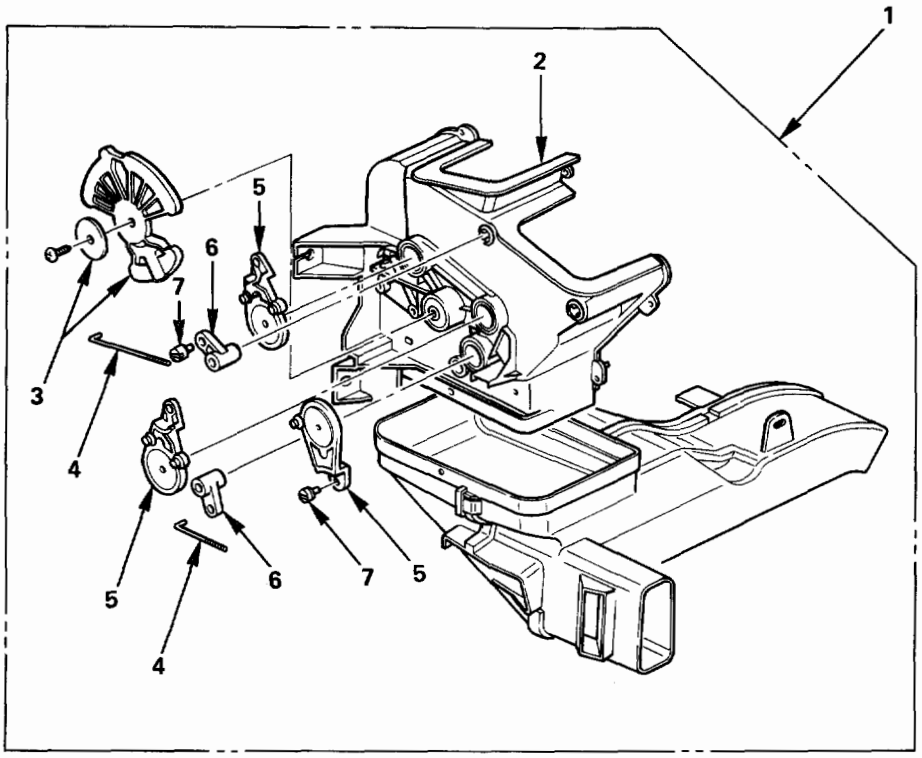

Removal steps
1. Heater unit
2. Case (Mode control)
3. Washer and mode main lever
4. Rod
5. Mode sub-lever
6. Door lever
7. Clip

Installation steps
To install, follow the removal steps in the reverse order.

Fig. 1A-17

REMOVAL

Preparation:

Disconnect the battery ground cable
Drain engine coolant

1. **Heater unit**
   - Refer to "HEATER UNIT" removal procedure in this section.
2. **Case (Mode control)**
   - Remove the case (Mode control) from heater unit.
3. **Washer and mode main lever**
4. **Rod**
5. **Mode sub-lever**
   - Press the tab of the sub-lever inward, and take out the sub-lever (Fig. 1A-18).
6. **Door lever**
   - Pull out the door lever while raising up the catch of the door lever (Fig. 1A-16).
7. **Clip**

INSTALLATION

To install, follow the removal steps in the reverse order, noting the following points:

1. Apply grease to mode sub-lever and to the abrasive surface of the heater unit.
2. After installing the link unit, check to see if the link unit operates correctly.

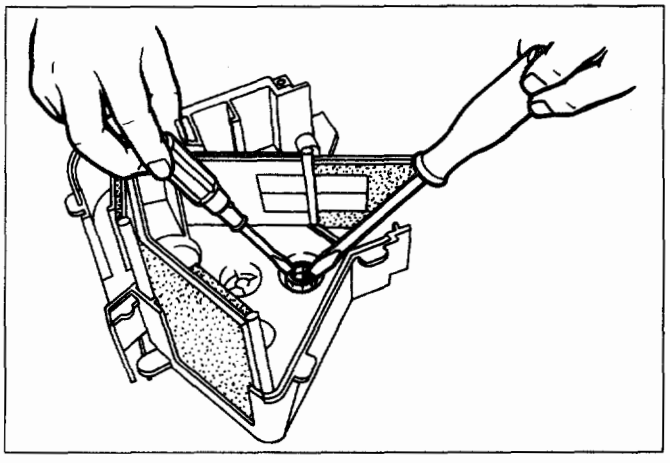

Fig. 1A-18

HEATER TEMPERATURE CONTROL LINK UNIT

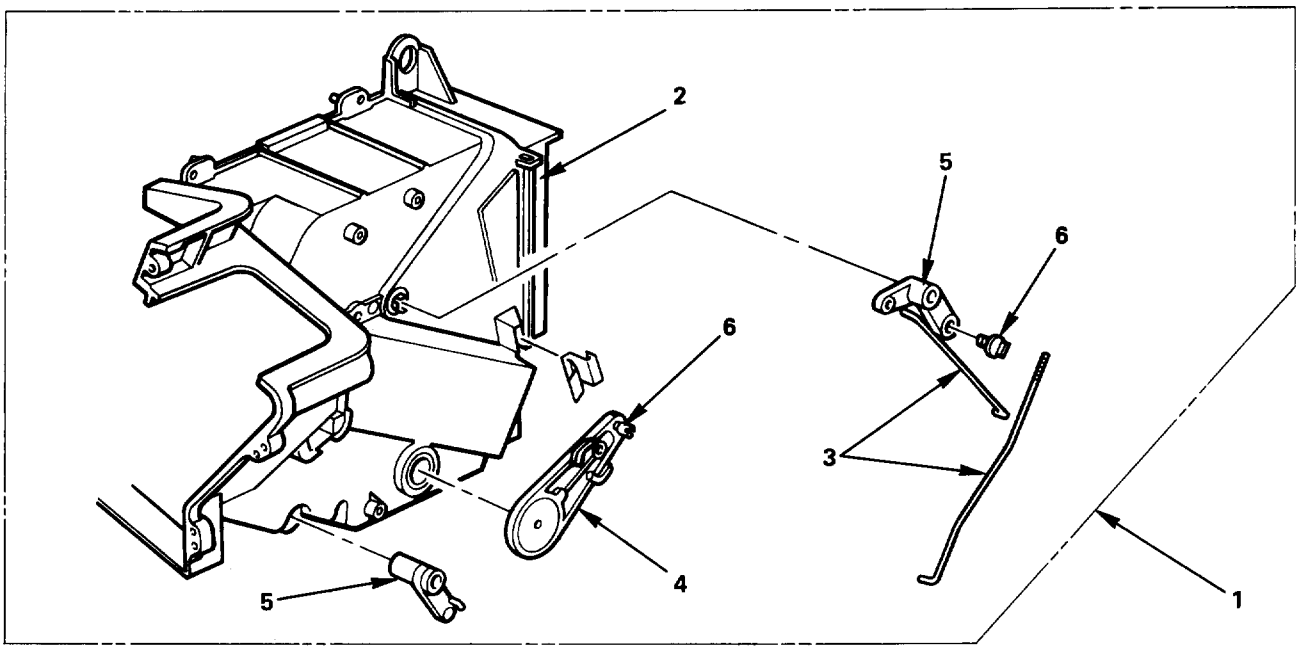

Removal steps
1. Heater unit
2. Case (Temperature control)
3. Rod
4. Sub-lever
5. Door lever
6. Clip

Installation steps
To install, follow the removal steps in the reverse order.

Fig. 1A-19

REMOVAL

Preparation:

Disconnect the battery ground cable
Drain engine coolant

1. **Heater unit**
   - Refer to "HEATER UNIT" removal procedure in this section.
2. **Case (Temperature control)**
   - Remove the case (Temperature control) from the heater unit.
3. **Rod**
4. **Sub-Lever (Fig. 1A-18)**
5. **Door Lever**
   - Pull out the door lever while raising up the catch of the door lever (Fig. 1A-16).
6. **Clip**

INSTALLATION

To install, follow the removal steps in the reverse order, noting the following points:

1. Apply grease to sub-lever and to the abrasive surface of the heater unit.
2. After installing the link unit, check to see if the link unit operates correctly.

BLOWER ASSEMBLY

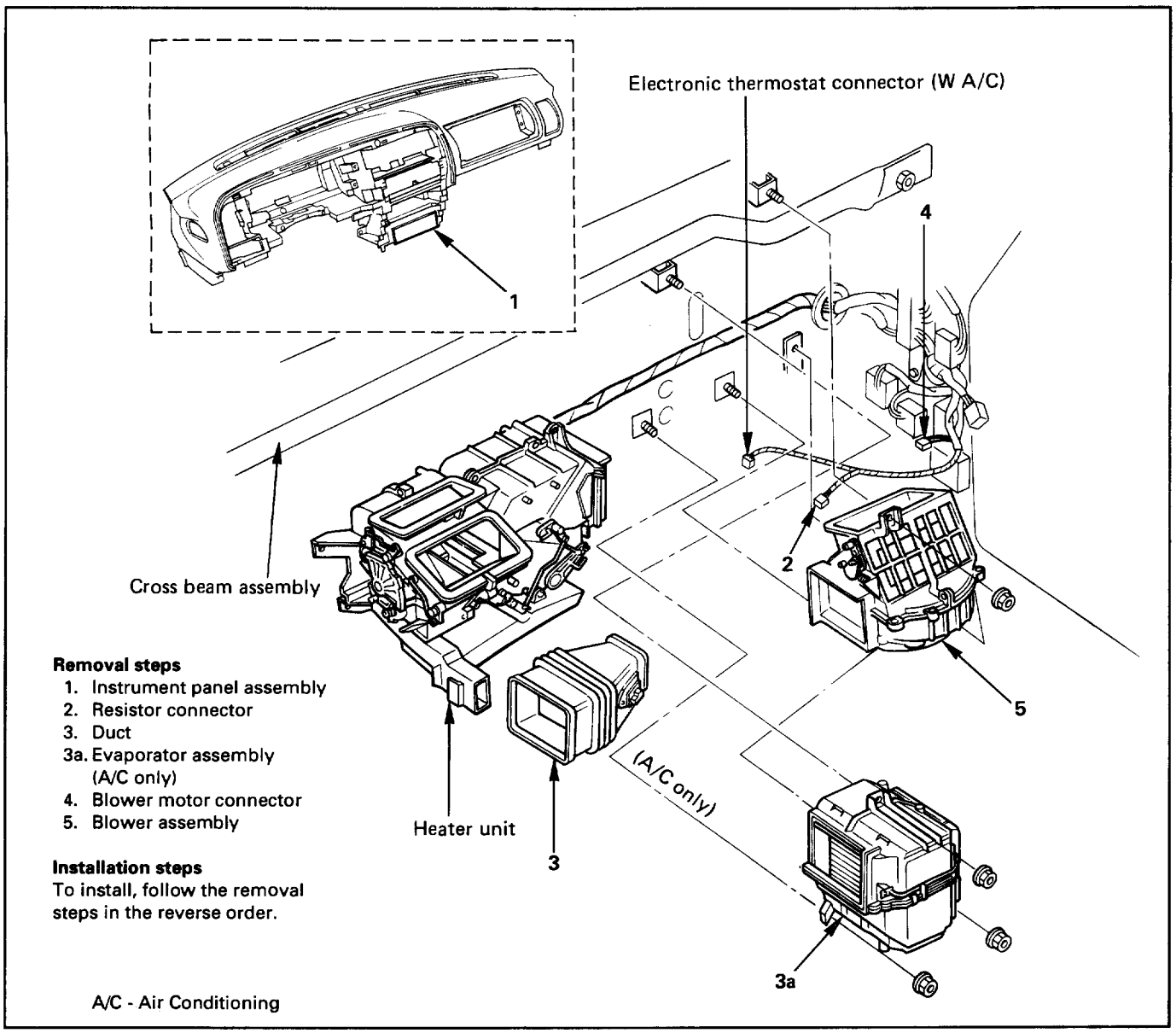

Fig. 1A-20

REMOVAL

Preparation:

Disconnect the battery ground cable

Discharge and recover refrigerant (W/Air conditioning)

(Refer to Section 1B "REFRIGERANT RECOVERY")

1. **Instrument panel assembly**
   - Refer to Section 10 "BODY" for INSTRUMENT PANEL ASSEMBLY removal procedure.
2. **Resistor connector**
3. **Duct**

3a. **Evaporator Assembly (A/C only)**
   - Refer to Section 1B "AIR CONDITIONING" for EVAPORATOR ASSEMBLY removal procedure.

4. **Blower motor connector**
5. **Blower assembly**

INSTALLATION

To install, follow the removal steps in the reverse order, noting the following point:

1. **Adjust control lever assembly cables**
   - Refer to "CONTROL LEVER ASSEMBLY" installation procedure in this section.

BLOWER LINK UNIT AND/OR MODE DOOR

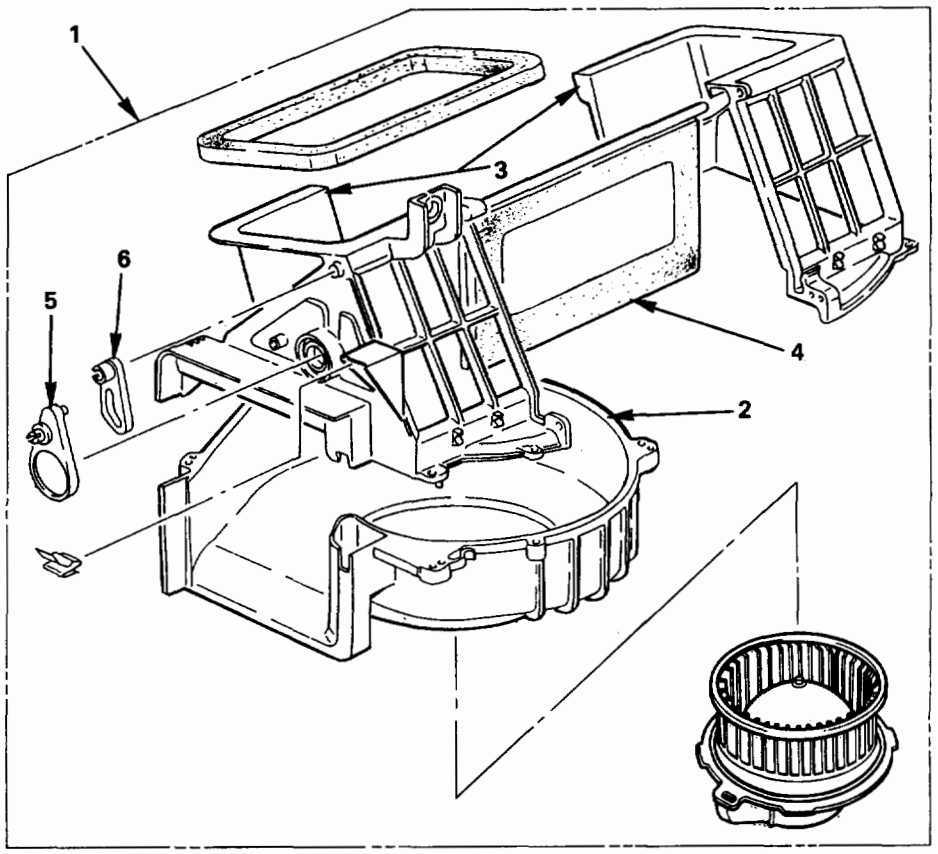

Removal steps
1. Blower assembly
2. Lower case
3. Upper case
4. Mode door
5. Sub lever
6. Door lever

Installation steps
To install, follow the removal steps in the reverse order.

Fig. 1A-21

REMOVAL

Preparation:

Disconnect the battery ground cable

1. **Blower Assembly**
   - Refer to "BLOWER ASSEMBLY" removal procedure in this section.
2. **Lower Case**
3. **Upper Case**
   - Separate upper case and slit the lining parting face with a knife (Fig. 1A-22).
4. **Mode door**
   - Pull out the mode door while raising up the catch of the door lever (Fig. 1A-16).
5. **Sub lever**
6. **Door lever**

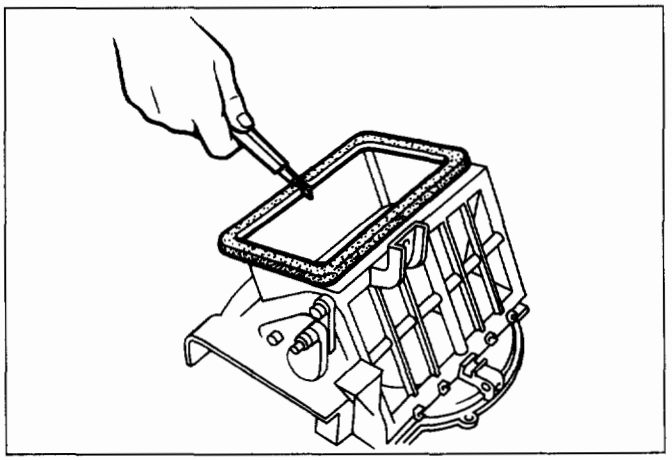

Fig. 1A-22

INSTALLATION

To install, follow the removal steps in the reverse order, noting the following points:

1. Apply grease to the door lever and to the abrasive surface of the upper case.
2. Apply an adhesive to parting face of lining when assembling upper case.

BLOWER MOTOR

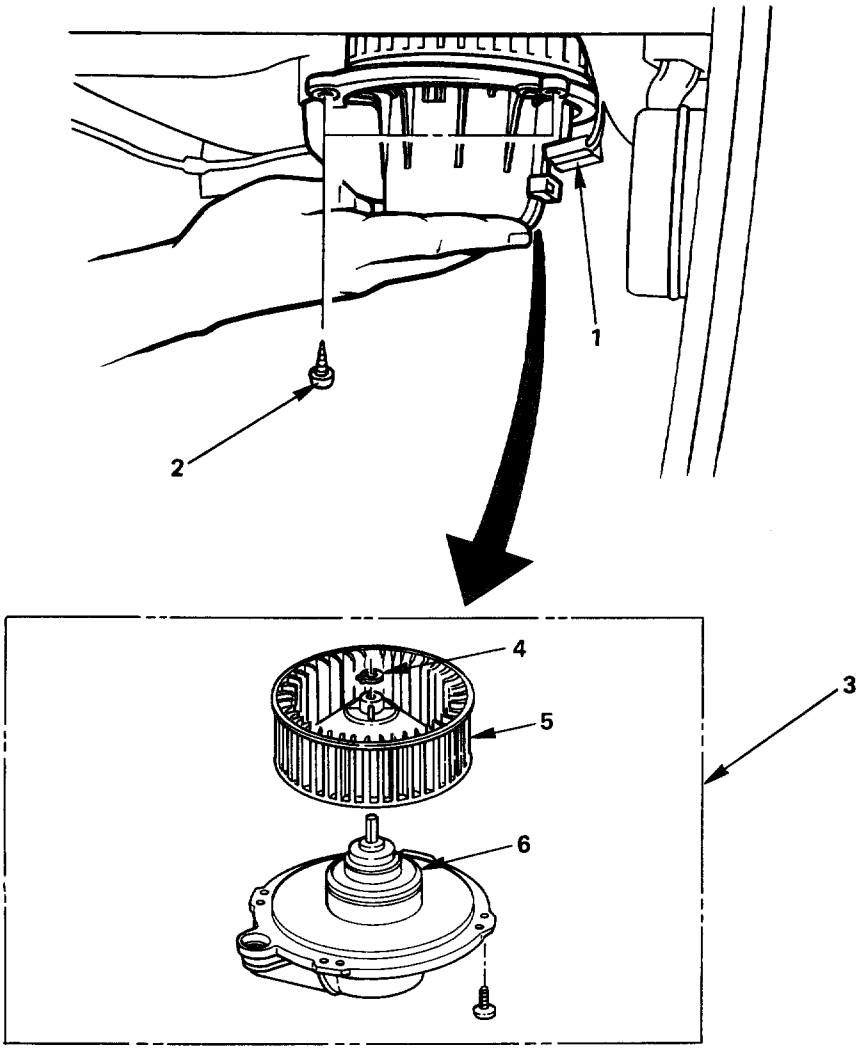

Removal steps

1. Blower motor connector
2. Attaching screw
3. Blower motor assembly
4. Clip
5. Fan
6. Blower moter

Installation steps

To install, follow the removal steps in the reverse order.

Fig. 1A-23

REMOVAL

Preparation:

- Disconnect battery ground cable.

1. **Blower moter connector**
2. **Attaching screw**
3. **Blower motor assembly**
4. **Clip**
5. **Fan**
6. **Blower moter**

INSTALLATION

To intall, follow the removal steps in the reverse order.

REAR HEATER DUCT, DEFROSTER NOZZLE AND VENTILATION DUCT

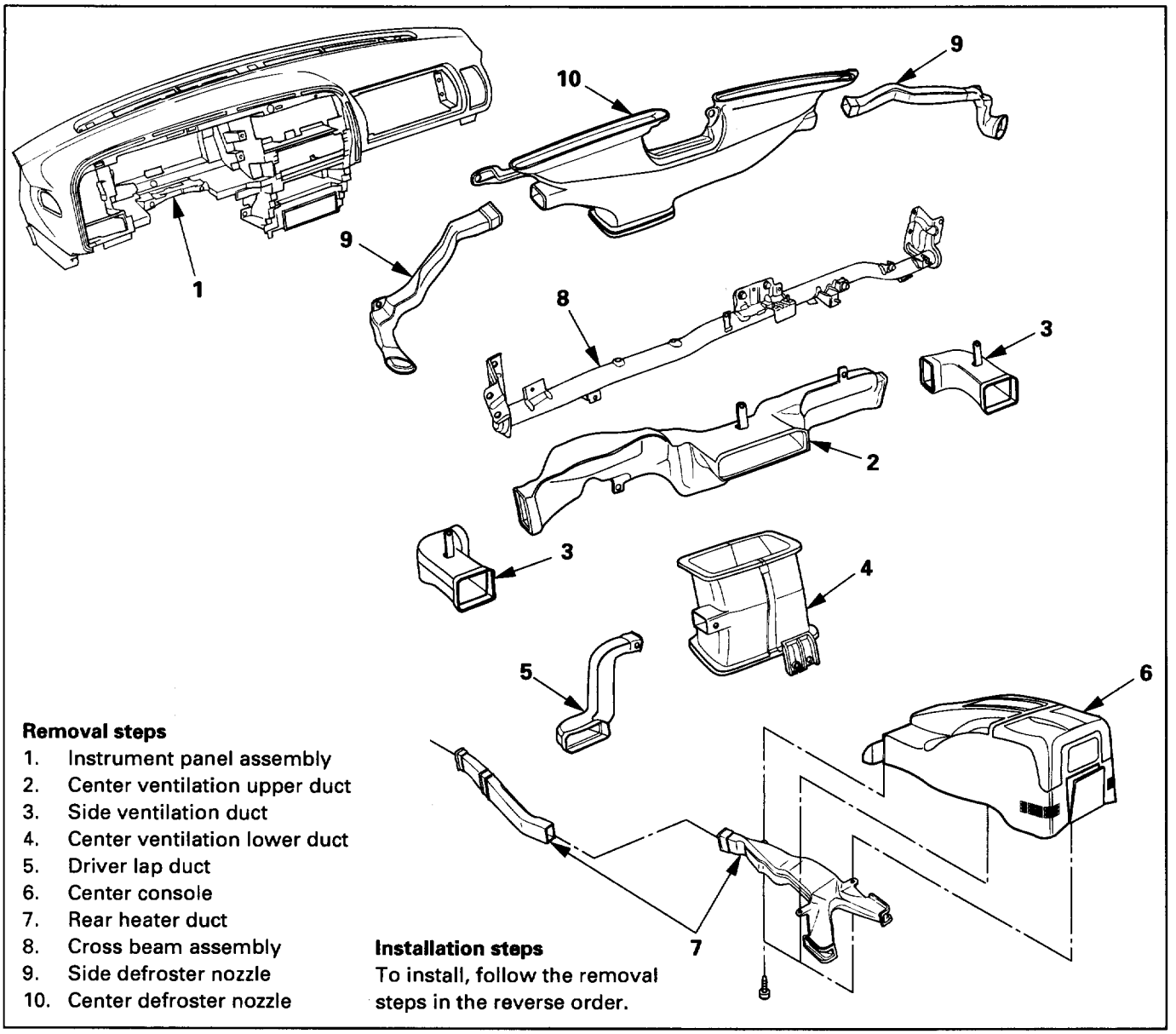

Removal steps
1. Instrument panel assembly
2. Center ventilation upper duct
3. Side ventilation duct
4. Center ventilation lower duct
5. Driver lap duct
6. Center console
7. Rear heater duct
8. Cross beam assembly
9. Side defroster nozzle
10. Center defroster nozzle

Installation steps
To install, follow the removal steps in the reverse order.

Fig. 1A-24

REMOVAL

Preparation:
- Disconnect battery ground cable.

1. **Instrument panel assembly**
   - Refer to Section 10 "BODY" for INSTRUMENT PANEL ASSEMBLY removal procedure.
2. **Center ventilation upper duct**
3. **Side ventilation duct**
4. **Center ventilation lower duct**
5. **Driver lap duct**
6. **Center console**
7. **Rear heater duct**
   - Refer to Section 10 "BODY" for CONSOLES removal procedure.
8. **Cross beam assembly**
   - Refer to Section 10 "BODY" for CROSS BEAM ASSEMBLY removal procedure.
9. **Side defroster nozzle**
10. **Center defroster nozzle**

INSTALLATION

To intall, follow the removal steps in the reverse order, noting the following point:

1. Connect each duct and nozzle securely leaving no clearance between them and making no improper matching.

CENTER AND/OR DRIVER SIDE VENT

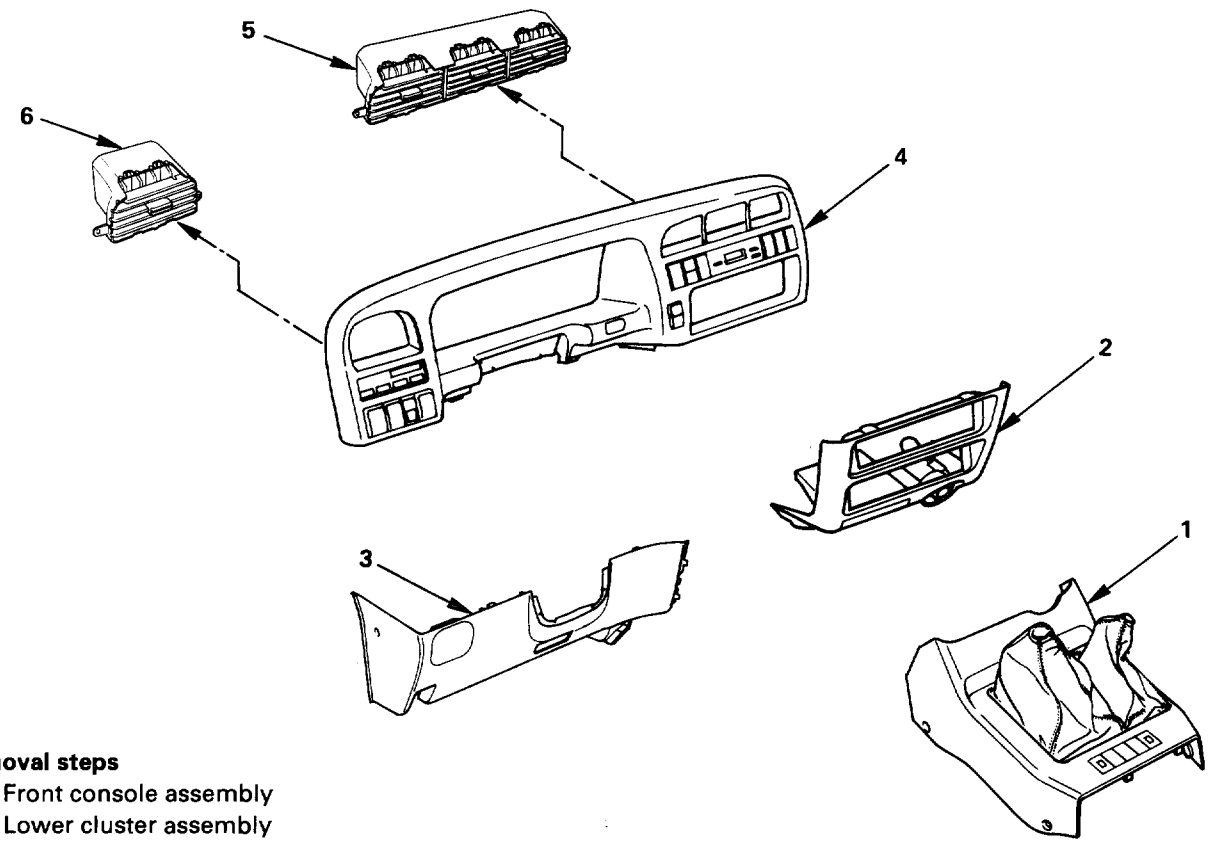

Removal steps

1. Front console assembly
2. Lower cluster assembly
3. Instrument panel driver lower cover assembly
4. Meter cluster assembly
5. Center vent
6. Side vent

Installation steps

To install, follow the removal steps in the reverse order.

Fig. 1A-25

REMOVAL

Preparation:

- Disconnect the battery ground cable.

1. **Front console assembly**
2. **Lower cluster assembly**
3. **Instrument panel driver lower cover assembly**
4. **Meter cluster assembly**
   - Refer to Section 10 "BODY" for INSTRUMENT PANEL ASSEMBLY removal procedure.
5. **Center vent**
   - Remove screws and the center vent from center cluster while prying up the center vent catch portions.
6. **Side vent**
   - Remove screws and the side vent from center cluster while prying up the side vent catch portions.

INSTALLATION

To intall, follow the removal steps in the reverse order.

CONTROL LEVER ASSEMBLY AND/OR CONTROL CABLES

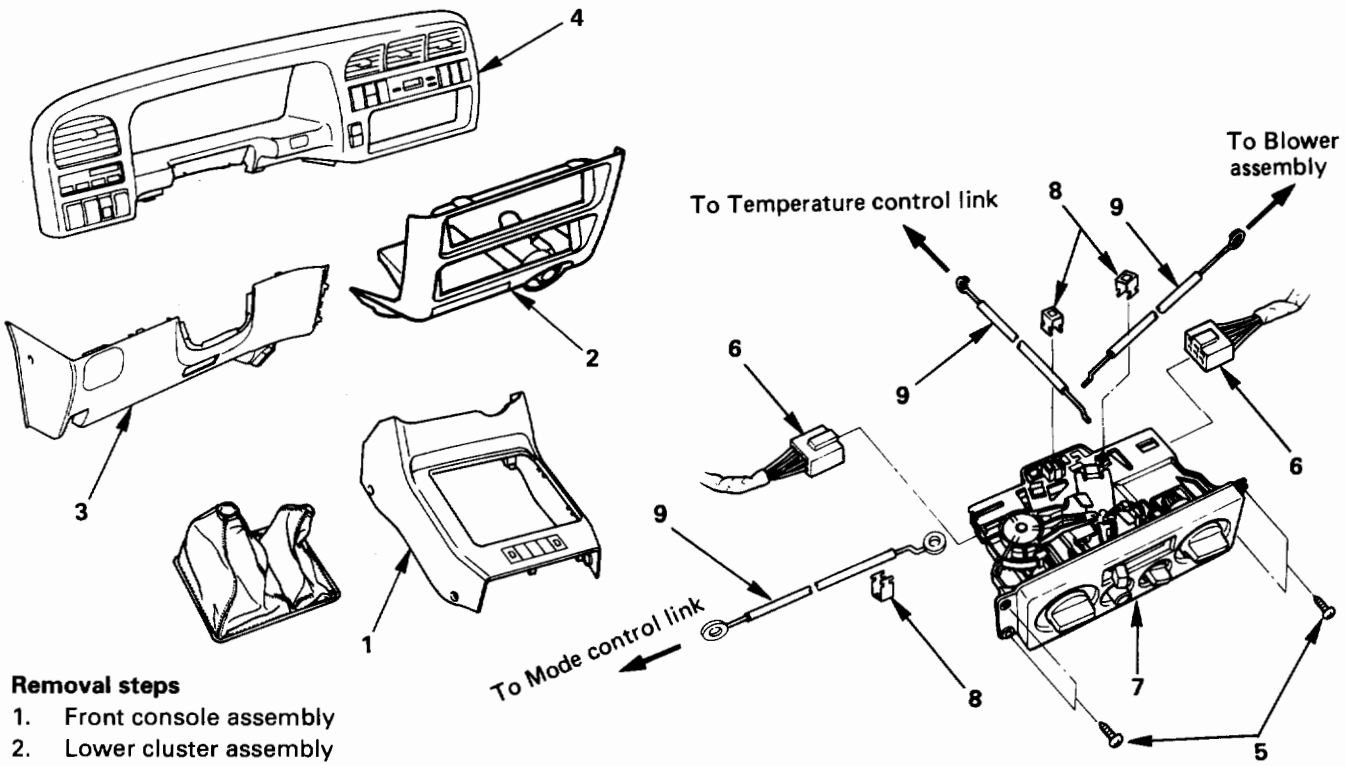

Removal steps

1. Front console assembly
2. Lower cluster assembly
3. Instrument panel driver lower cover assembly
4. Meter cluster assembly
5. Attaching screws
6. Fan switch and air conditioning switch connector
7. Control lever assembly
8. Clip
9. Control cable

Installation steps

To install, follow the removal steps in the reverse order.

Fig. 1A-26

REMOVAL

Preparation:

- Disconnect the battery ground cable.

1. **Front console assembly**
2. **Lower cluster assembly**
3. **Instrument panel driver lower cover assembly**
4. **Meter cluster assembly**
   - Refer to Section 10 "BODY" for INSTRUMENT PANEL ASSEMBLY removal procedure.
5. **Attaching screws (Fig 1A-27)**
   - Remove the 4 attaching screws.
6. **Fan switch and air conditioning switch connector**
   - Pull the control lever assembly out and disconnect the connectors (Fig 1A-28).
7. **Control lever assembly**
8. **Clip (Fig 1A-29)**
9. **Control cable**

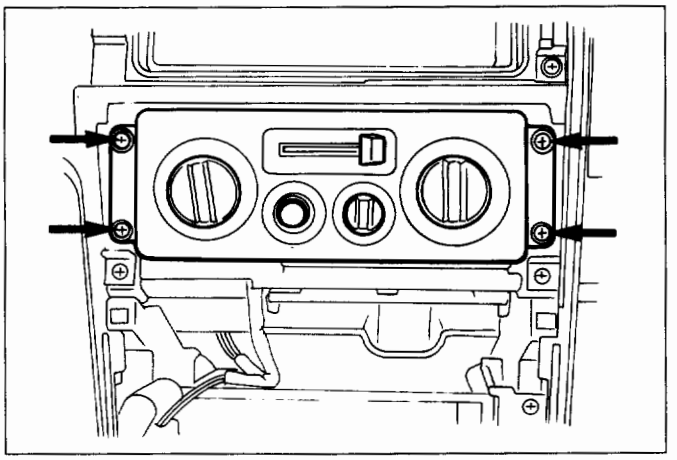

Fig. 1A-27

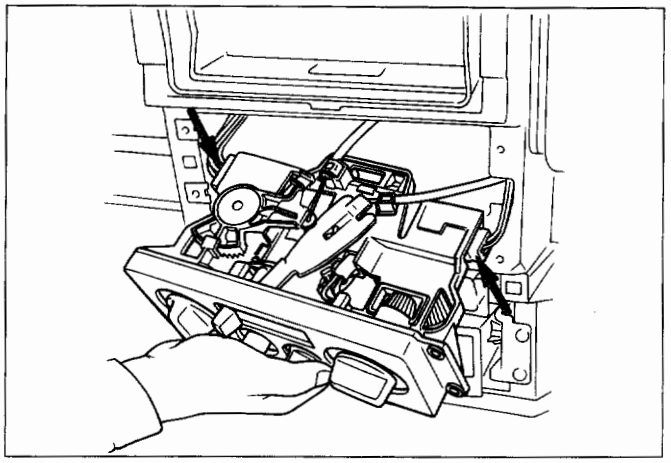

Fig. 1A-28

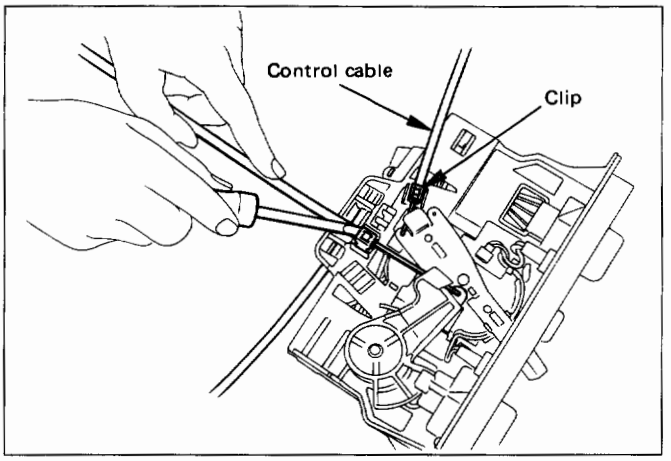

Fig. 1A-29

INSTALLATION

To install, follow the removal steps in the reverse order, noting the following points:

1. Adjust the control cables (Fig. 1A-30)
   - Air source control cable
     (1) Slide the control lever to the left ("CIRC" position).
     (2) Connect the control cable at the "CIRC" position of the link unit of blower assembly and fix it with the clip.
   - Temperature control cable
     (1) Turn the control knob to the left ("MAX COLD" position).
     (2) Connect the control cable at the "COLD" position of the temperature control link of the heater unit and fix it with the clip.
   - Air select control cable
     (1) Turn the control knob to the right ("DEFROST" position).
     (2) Connect the control cable at the "DEFROST" position of the mode control link of the heater unit and fix it with the clip.
2. Check control cable operation.

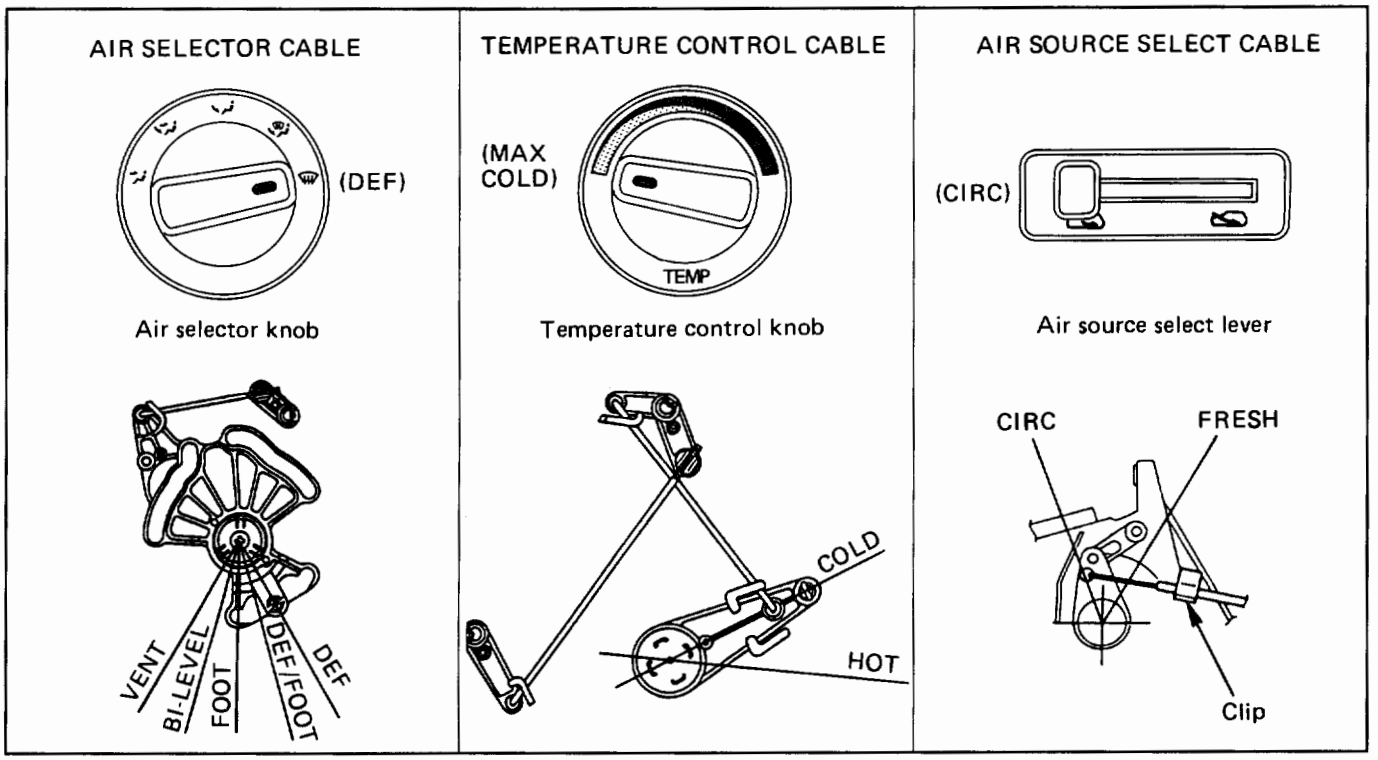

Fig. 1A-30

CONTROL PANEL ILLUMINATION BULB

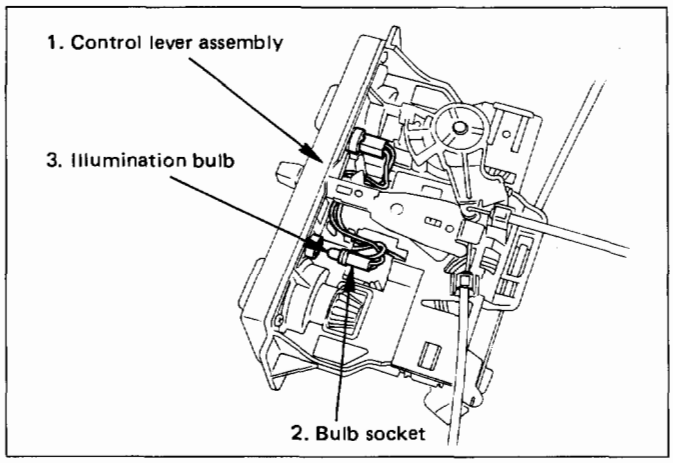

Fig. 1A-31

REMOVAL

Preparation:

Disconnect the battery ground cable

1. **Control lever assembly**
   - Refer to "CONTROL LEVER ASSEMBLY" removal procedure in this section.
2. **Bulb socket**
   - Pull out the socket from the panel by turning it counterclockwise.
3. **Illumination bulb**
   - Pull the illumination bulb from socket.

INSTALLATION

To install, follow the removal steps in the reverse order.

RESISTOR

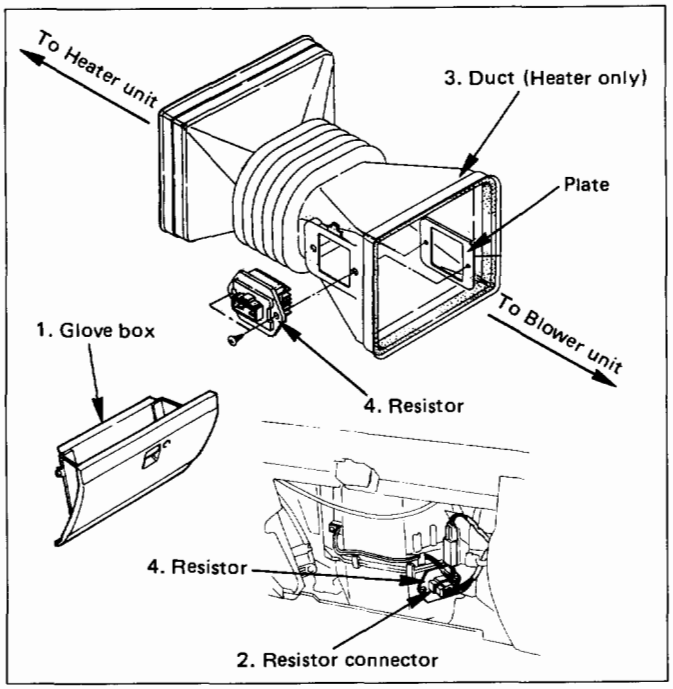

Fig. 1A-32

REMOVAL

Preparation:

Disconnect the battery ground cable

1. **Glove box**
2. **Resistor connector**
3. **Duct (Heater only)**
4. **Resistor**

INSTALLATION

To install, follow the removal steps in the reverse order.

MEMO

SECTION 1B

AIR CONDITIONING

CONTENTS

General Description 1B– 2
Air Conditioning Refrigerant Cycle Construction 1B– 2
Compressor 1B– 3
Magnetic Clutch 1B– 3
Condenser 1B– 4
Receiver/Drier 1B– 4
Pressure Switch 1B– 4
Expansion Valve 1B– 5
Evaporator 1B– 5
Electronic Thermostat 1B– 6
Refrigerant Line 1B– 6
Air Conditioning Parts 1B– 7
Wiring Diagram 1B– 8
Diagnosis 1B– 9
Air Conditioning Cycle Diagnosis 1B– 9
Checking Refrigerant System with Manifold Gauge 1B–10
Magnetic Clutch Diagnosis 1B–14
Individual Inspection 1B–18
On-Vehicle Service 1B–19
General Repair Procedure 1B–19
Compressor 1B–24
New Compressor Installation 1B–25
Condenser Assembly 1B–26
Receiver/Drier 1B–27
Pressure Switch 1B–27
Evaporator Assembly 1B–28
Electronic Thermostat, Evaporator Core and/or Expansion Valve 1B–29
Air Conditioning Switch and Illumination Bulb 1B–31
Refrigerant Line 1B–32
Main Data and Specifications 1B–33
General Specifications 1B–33
Torque Specifications 1B–34

GENERAL DESCRIPTION

AIR CONDITIONING REFRIGERANT CYCLE CONSTRUCTION

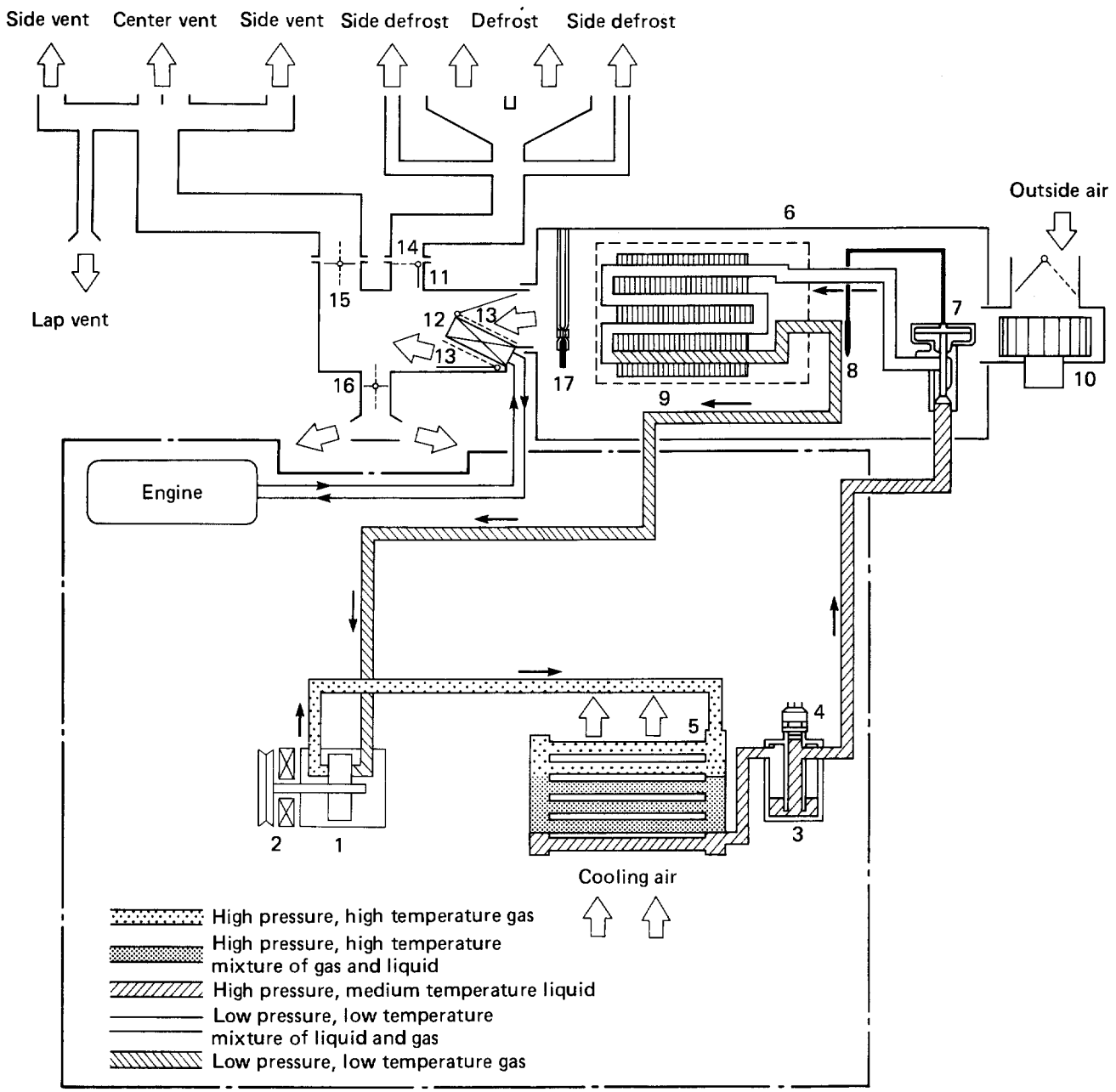

1. Compressor
2. Magnetic clutch
3. Receiver/Drier
4. Dual pressure switch
5. Condenser
6. Evaporator assembly
7. Expansion valve
8. Temperature sensor
9. Evaporator core
10. Blower motor
11. Heater unit
12. Heater core
13. Temp. control door (Air mix door)
14. Mode (DEF) control door
15. Mode (VENT) control door
16. Mode (HEAT) control door
17. Electronic thermostat

Fig. 1B-1

The refrigeration cycle includes the following four processes as the refrigerant changes repeatedly from liquid to gas and back to liquid while circulating.

EVAPORATION

The refrigerant is changed from a liquid to a gas inside the evaporator. The refrigerant mist that enters the evaporator vaporizes readily. The liquid refrigerant removes the required quantity of heat (latent heat of vaporization) from the air around the evaporator core cooling fins and rapidly vaporizes. Removing the heat cools the air, which is then radiated from the fins and lowers the temperature of the air inside the vehicle.

The refrigerant liquid sent from the expansion valve and the vaporized refrigerant gas are both present inside the evaporator and the liquid is converted to gas.

With this change from liquid to gas, the pressure inside the evaporator must be kept low enough for vaporization to occur at a lower temperature. Because of that, the vaporized refrigerant is sucked into the compressor.

COMPRESSION

The refrigerant is compressed by the compressor until it is easily liquefied at normal temperature.

The vaporized refrigerant in the evaporator is sucked into the compressor. This action maintains the refrigerant inside the evaporator at a low pressure so that it can easily vaporize, even at low temperatures close to 0°C (32°F).

Also, the refrigerant sucked into the compressor is compressed inside the cylinder to increase the pressure and temperature to values such that the refrigerant can easily liquefy at normal ambient temperatures.

CONDENSATION

The refrigerant inside the condenser is cooled by the outside air and changes from gas to liquid.

The high temperature, high pressure gas coming from the compressor is cooled and liquefied by the condenser with outside air and accumulated in the receiver/drier. The heat radiated to the outside air by the high temperature, high pressure gas in the compressor is called heat of condensation. This is the total quantity of heat (heat of vaporization) the refrigerant removes from the vehicle interior via the evaporator and the work (calculated as the quantity of heat) performed for compression.

EXPANSION

The expansion valve lowers the pressure of the refrigerant liquid so that it can easily vaporize.

The process of lowering the pressure to encourage vaporization before the liquefied refrigerant is sent to the evaporator is called expansion. In addition, the expansion valve controls the flow rate of the refrigerant liquid while decreasing the pressure.

That is, the quantity of refrigerant liquid vaporized inside the evaporator is determined by the quantity of heat which must be removed at a prescribed vaporization temperature. It is important that the quantity of refrigerant be controlled to exactly the right value.

COMPRESSOR

It compressor performs two main functions:

It compresses low-pressure and low-temperature refrigerant vapor from the evaporator into high-pressure and high-temperature refrigerant vapor to the condenser. And it pumps refrigerant and refrigerant oil through the air conditioning system.

This vehicle is equipped with five-vane rotary compressor.

The thermo sensor is installed to the front head of the compressor to protect it by stopping its operation when the refrigerant gas is insufficient or when the temperature is abnormally high.

- OFF.....160 ± 5°C (320.0 ± 9.0°F)
- ON .....135 ± 5°C (275.0 ± 9.0°F)

The specified amount of the compressor oil is 150cc (5.0 fl.oz.).

The oil used in the HFC-134a system compressor differs from that used in R-12 systems.

Also, compressor oil to be used varies according to the compressor model. Be sure to avoid mixing two or more different types of oil.

If the wrong oil is used, lubrication will be poor and the compressor will seize or malfunction.

The magnetic clutch connector is a waterproof type.

MAGNETIC CLUTCH

The compressor is driven by the drive belt from the crank pulley of the engine. If the compressor is activated each time the engine is started, this causes too much load to the engine. The magnetic clutch transmits the power from the engine to the compressor and activates it when the air conditioning is "ON". Also, it cuts off the power from the engine to the compressor when the air conditioning is "OFF". (Magnetic clutch repair procedure can be found in Section 1D.)

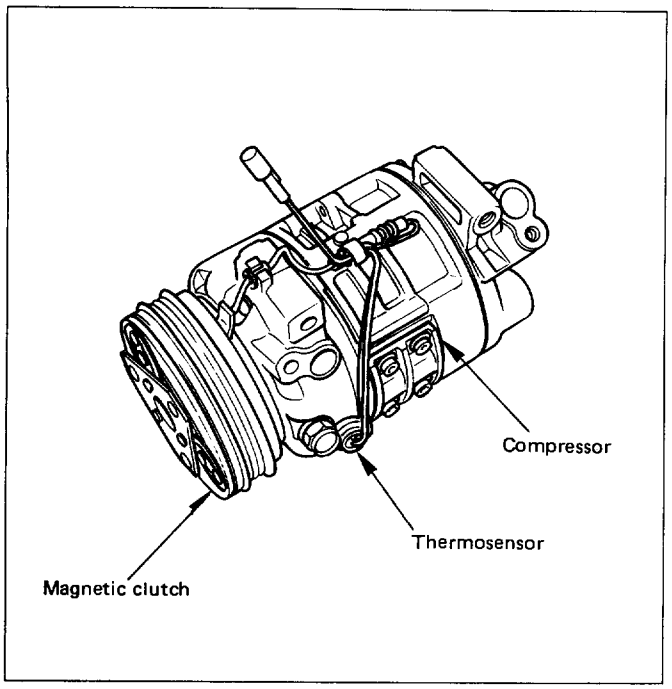

Fig. 1B-2

CONDENSER

The condenser assembly is located in front of the radiator. It carries the refrigerant and cooling fins to provide rapid transfer of heat.

Also, it functions to cool and liquefy the high-pressure and high-temperature vapor sent from the compressor by the radiator fan or outside air.

A condenser may malfunction in two ways: it may leak, or it may be restricted. A condenser restriction will result in excessive compressor discharge pressure. If a partial restriction is present, the refrigerant expands after passing through the restriction.

Thus, ice or frost may from immediately after the restriction. If air flow through the condenser or radiator is blocked, high discharge pressures will result. During normal condenser operation, the refrigerant outlet line will be slightly cooler than the inlet line.

The vehicle is equipped with the parallel flow type condenser. A larger thermal transmission area on the inner surface of the tube allows the radiant heat to increase and the ventilation resistance to decrease.

The refrigerant line connection has a bolt at the block joint, for easy servicing.

RECEIVER/DRIER

The receiver/drier performs four functions;

- As the quantity of refrigerant circulated varies depending on the refrigeration cycle conditions, sufficient refrigerant is stored for the refrigeration cycle to operate smoothly in accordance with fluctuations in the quantity circulated.
- The liquefied refrigerant from the condenser is mixed with refrigerant gas containing air bubbles. If refrigerant containing air bubbles is sent to the expansion valve, the cooling capacity will decrease considerably. Therefore, the liquid and air bubbles are separated and only the liquid is sent to the expansion valve.
- The receiver/drier utilizes a filter and dryer to remove the dirt and water mixed in the cycling refrigerant.
- The sight glass, installed atop the receiver/drier, show the state of the refrigerant.

A receiver/drier may fail due to a restriction inside the body of the unit. A restriction at inlet to the receiver/drier will cause high pressures.

Outlet restrictions will be indicated by low pressure and little or no cooling. An excessively cold receiver/drier outlet may indicate a restriction.

The receiver/drier of this vehicle is made of aluminum with a smaller tank. It has 300 cc refrigerant capacity.

The refrigerant line connection has a bolt at the block joint, for easy servicing.

PRESSURE SWITCH

The pressure switch (Dual pressure switch) is installed on the upper part of the receiver/drier, to detect excessively high pressure (high pressure switch) and prevent compressor seizure due to the refrigerant leaking (low pressure switch), so that the compressor is able to turned "ON" or "OFF".

The pressure characteristics of HFC-134a refrigerant differ from those of R-12. Thus, the pressure switch operation for HFC-134a systems has been changed from R-12.

- **Compressor ON · OFF (kPa/psi)**
  Low-pressure control
  ON: 186.3 ± 29.4 (27.0 ± 4.3)
  OFF: 176.5 ± 19.6 (25.6 ± 2.8)
  High-pressure control
  ON: 2059.4 ± 196.1 (341.3 ± 28.4)
  OFF: 2942.0 ± 196.1 (426.6 ± 28.4)

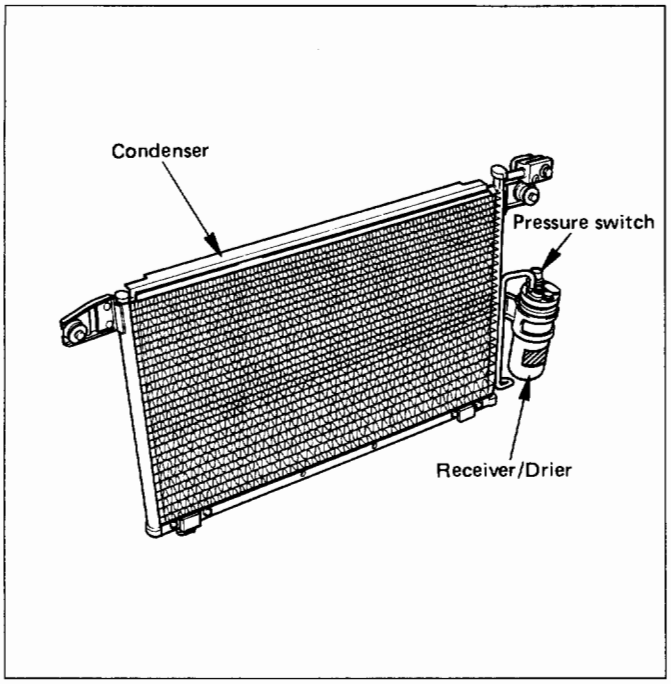

Fig. 1B-3

EXPANSION VALVE

This expansion valve is external pressure type and it is installed at the evaporator intake port.

The expansion valve converts the high pressure liquid refrigerant sent from the receiver/drier to a low pressure liquid refrigerant by forcing it through a tiny port before sending it to the evaporator.

This type of expansion valve consists of a temperature sensor, diaphragm, ball valve, ball seat, spring adjustment screw, etc.

The temperature sensor contacts the evaporator outlet pipe, and converts changes in temperature to pressure. It then transmits these to the top chamber of the diaphragm.

The refrigerant pressure is transmitted to the diaphragms bottom chamber through the external equalizing pressure tube.

The ball valve is connected to the diaphragm. The opening angle of the expansion valve is determined by the force acting on the diaphragm and the spring pressure.

The expansion valve regulates the flow rate of the refrigerant. Accordingly, when a malfunction occurs to this expansion valve, both discharge and suction pressures get low, resulting in insufficient cooling capacity of the evaporator.

The calibration has been changed to match the characteristics of HFC-134a.

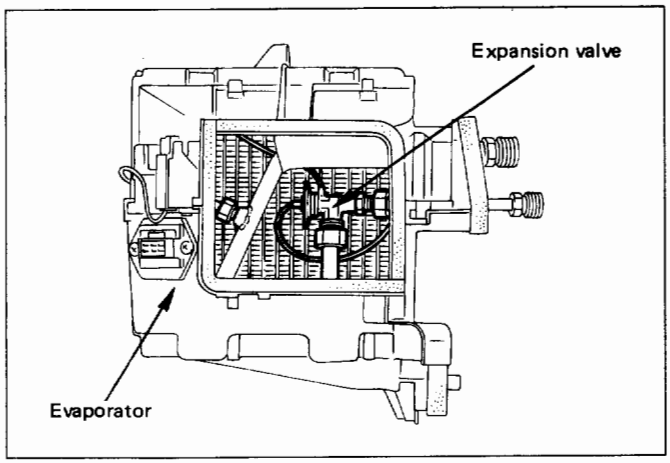

Fig. 1B-4

EVAPORATOR

The evaporator cools and dehumidifies the air before the air enters the vehicle. High-pressure liquid refrigerant flows through the expansion valve into the low-pressure area of the evaporator. The heat in the air passing through the evaporator core is lost to the cooler surface of the core, thereby cooling the air.

As heat is lost between the air and the evaporator core surface, moisture in the vehicle condenses on the outside surface of the evaporator core and is drained off as water.

When the evaporator malfunctions, the trouble will show up as inadequate supply of cool air. The cause is typically a partially plugged core due to dirt, or a malfunctioning blower motor.

The evaporator core with a laminate louver fin is a single-sided tank type where only one tank is provided under the core.

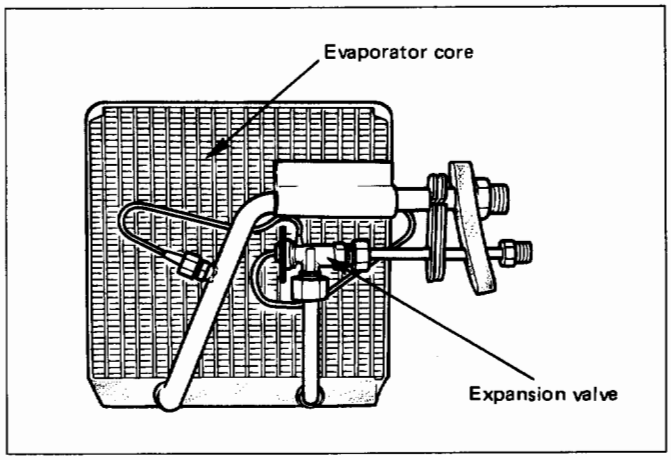

Fig. 1B-5

ELECTRONIC THERMOSTAT

The thermostat consists of the thermosensor and thermostat unit which functions electrically to reduce the noises being generated while the system is in operation.

The electronic thermosensor is mounted at the evaporator core outlet and senses the temperature of the cool air from the evaporator. Temperature signals are input to the thermostat unit. This information is compared by the thermo unit and the results in output to operate the A/C Thermostat relay and turn the magnetic clutch "ON" or "OFF" to prevent evaporator freeze-up.

A characteristic of the sensor is that the resistance decreases as the temperature increases and the resistance increases as the temperature decreases.

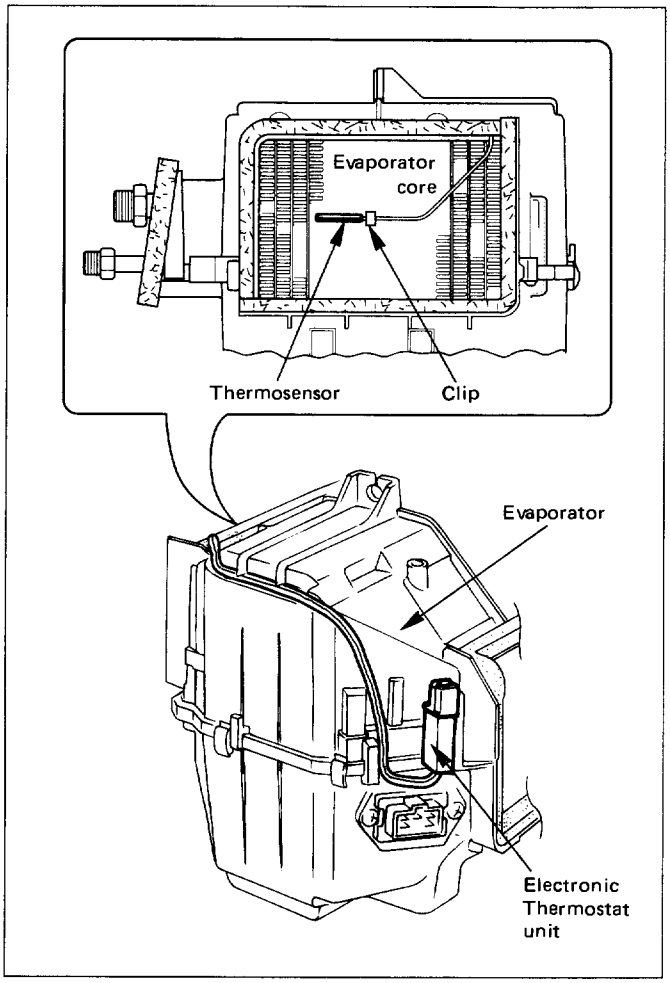

Fig. 1B-6

REFRIGERANT LINE

Restrictions in the refrigerant line will be indicated by:

1. Suction line; A restricted suction line will cause low suction pressure at the compressor, low discharge pressure and little or not cooling.
2. Discharge line; A restriction in the discharge line generally will cause the discharge line to leak.
3. Liquid line; A liquid line restriction will be evidenced by low discharge and suction pressure and insufficient cooling.

Refrigerant flexible hoses that have a low permeability to refrigerant and moisture are used. These low permeability hoses have a special nylon layer on the inside.

Refrigerant lines given in the illustration (Fig. 1B-8).

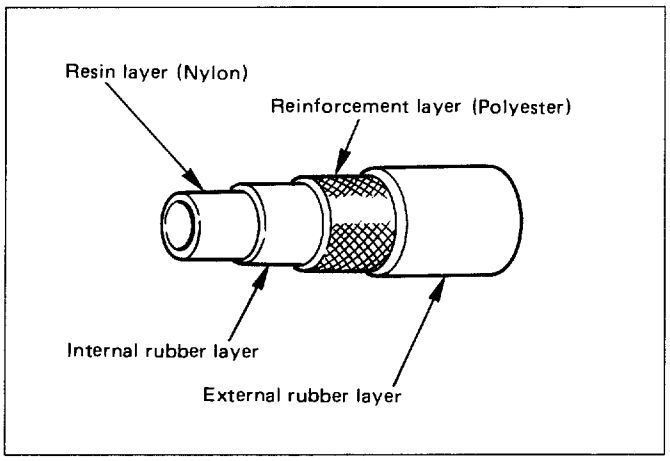

Fig. 1B-7

AIR CONDITIONING PARTS

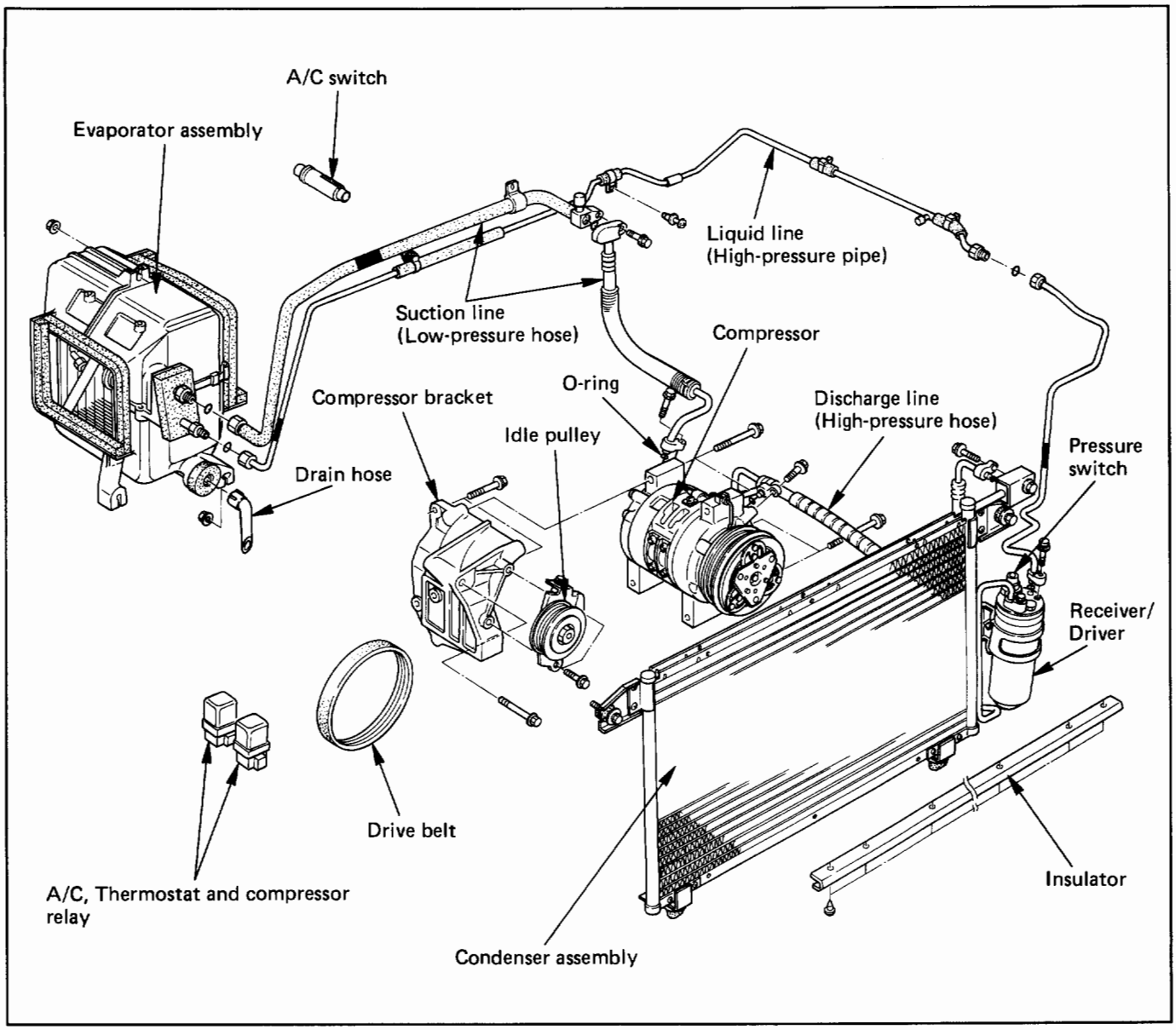

Fig. 1B-8

WIRING DIAGRAM

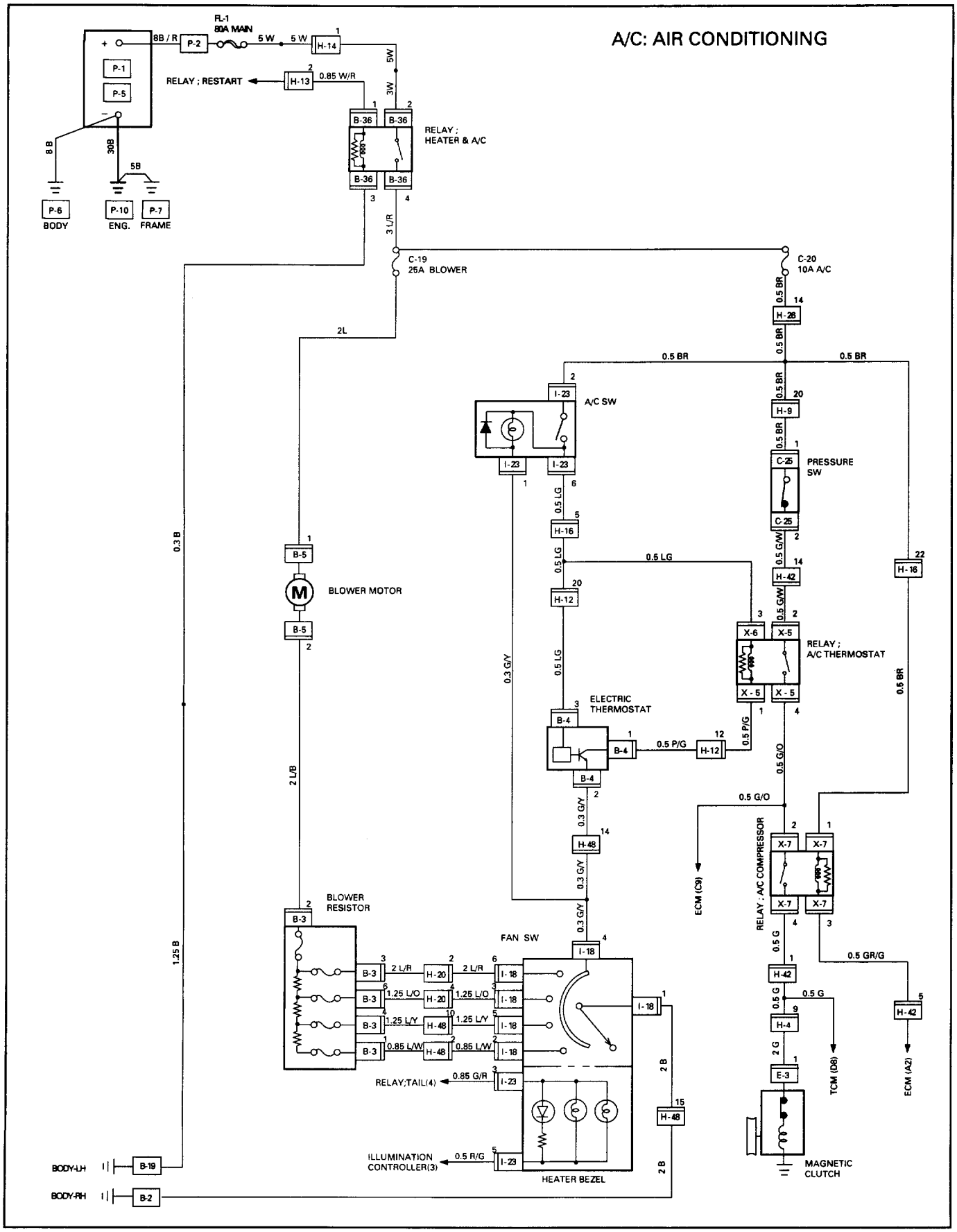

Fig. 1B-9

DIAGNOSIS

AIR CONDITIONING CYCLE DIAGNOSIS

TROUBLE	POSSIBLE CAUSE	CORRECTION
No cooling or insufficient cooling	1. Magnetic clutch does not run	• Refer to "MAGNETIC CLUTCH DIAGNOSIS" in this section
	2. Compressor is not rotating properly	
	• Drive belt loosened or broken	• Adjust the drive belt to the specified tension or replace the drive belt
	• Magnetic clutch face is not clean and slips	• Clean the magnetic clutch face or replace
	• Incorrect clearance between magnetic drive plate and pulley	• Adjust the clearance (Refer to Section 1D "COMPRESSOR OVERHAUL")
	• Compressor oil leaks from shaft seal or shell	• Replace the compressor
	• Compressor seized	• Replace the compressor
	3. Insufficient or excessive charge of refrigerant	• Discharge and recover refrigerant. Recharge to specified amount.
	4. Leaks in the refrigerant system	• Check refrigerant system for leaks and repair as necessary Discharge and recover refrigerant. Recharge to specified amount.
	5. Condenser clogged or insufficient radiation	• Clean the condenser or replace as necessary
	6. Temperature control link unit of the heater unit defective	• Repair the link unit
	7. Unsteady operation due to foreign substance in expansion valve	• Replace the expansion valve
	8. Poor operation of electronic thermostat	• Check electronic thermostat and replace as necessary
Insufficient velocity of cooling air	1. Evaporator clogged or frosted	• Check evaporator core and replace or clean the core
	2. Air leaking from cooling unit or air duct	• Check evaporator and duct connection, then repair as necessary
	3. Blower motor does not rotate properly	• Refer to Section 1A for "FAN CONTROL KNOB (FAN SWITCH) DIAGNOSIS"

* For the execution of the charging and discharging operation in the table above, refer to the "RECOVERY, RECYCLING, EVACUATING AND CHARGING" in this section.

CHECKING REFRIGERANT SYSTEM WITH MANIFOLD GAUGE

Since Refrigerant-134a (HFC-134a) is used in the air conditioning system in this vehicle, be sure to use manifold gauges, charging hoses and other air conditioning service tools for HFC-134a when checking the refrigerant system.

Conditions;
- Run the engine at Idling
- Air conditioning switch is "ON"
- Run the blower motor at "HIGH" position
- Temperature control lever set to "MAX COLD"
- Air source selector lever at "CIRC"
- Open the engine hood
- Close all the doors

Normal pressure;
At ambient temperature:
Approx. 25 – 30°C (77 – 86°F)
Low-pressure side:
Approx 147.1 – 294.2 kPa (21.3 – 42.7 psi)
High-pressure side:
Approx. 1372.9 – 1863.3 kPa (199.1 – 270.2 psi)
Refer to the table on refrigerant pressure-temperature relationship

HFC-134a Pressure-Temperature Relationship			
Pressure		Temperature	
(kPa)	(psi)	(°C)	(°F)
36	5.3	–20	–4.4
67	9.7	–15	5
104	15	–10	14
147	21	–5	23
196	28	0	32
255	37	5	41
314	45	10	50
392	57	15	59
471	68	20	68
569	82	25	77
677	98	30	86
785	114	35	95
912	132	40	104
1059	154	45	113
1216	176	50	122

Connect the manifold gauge (Fig. 1B-10)
Low-pressure hose (LOW) – Suction side
High-pressure hose (HI) – Discharge side

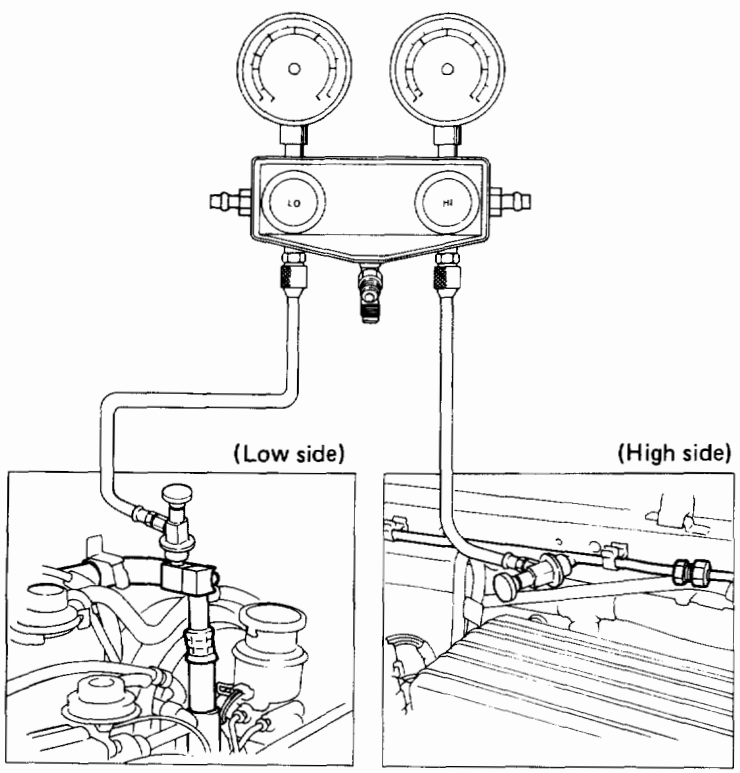

Fig. 1B-10

RESULT	CHECK POINT/SYMPTOM	TROUBLE CAUSE	CORRECTION
Discharge (High Gauge) Pressure Abnormally High	1. Condenser or cooling fan.	1. Condenser clogged or dirty. Cooling fan does not operate properly.	1. Clean the condenser fins. Check cooling fan operation.
	2. Insufficient cooling.	2. Excessive refrigerant in system.	2. • Discharge and recover refrigerant. Recharge to specified amount.
	3. High pressure gauge drop (After stopping A/C, pressure drops approx. 196 kPa/28 psi quickly).	3. Air in system.	3. Evacuate and charge refrigerant system.
Discharge (High Gauge) Pressure Abnormally Low	1. Insufficient cooling.	1. Insufficient refrigerant in system.	1. • Check for leaks. • Discharge and recover refrigerant. Recharge to specified amount.
	2. Low pressure gauge indicates vacuum.	2. Clogged or defective expansion valve.	2. Replace expansion valve.
	3. Frost or dew on refrigerant line before and after receiver/drier or expansion valve, and low pressure gauge indicates vacuum.	3. Restriction caused by debris or moisture in receiver/drier.	3. Check system for restriction and replace receiver/drier.
	4. High and low pressure gauge balanced quickly (After turned off A/C).	4. • Compressor seal defective. • Poor compression due to defective compressor gasket.	4. Repair or replace the compressor.

A/C–Air Conditioning

RESULT	CHECK POINT/SYMPTOM	TROUBLE CAUSE	CORRECTION
Suction (Low Gauge) Pressure Abnormally High	1. Low pressure gauge (Low pressure gauge is lowered after condenser is cooled by water).	1. Excessive refrigerant in system.	1. Discharge and recover refrigerant. Recharge to specified amount.
	2. Low pressure hose temperature (Low pressure hose temperature around the compressor refrigerant line connector is lower than around evaporator).	2. • Unsatisfactory valve operation due to defective temperature sensor of expansion valve. • Expansion valve opens too long.	2. Replace the expansion valve.
	3. High and low pressure gauge balanced quickly (After turned off A/C).	3. Compressor gasket is defective.	3. Repair or replace the compressor.
Suction (Low Gauge) Pressure Abnormally Low	1. Insufficient cooling.	1. Insufficient refrigerant in system.	1. • Check for leaks. • Discharge and recover refrigerant. Recharge to specified amount.
	2. Frost on the expansion valve inlet line.	2. Expansion valve clogged.	2. Replace the expansion valve.
	3. Receiver/drier inlet and outlet refrigerant line temperature (A distinct difference in temperature develops).	3. Receiver/Drier clogged	3. Replace the receiver/drier.
	4. Expansion valve outlet refrigerant line (Not cold and low pressure gauge indicates vacuum).	4. Expansion valve temperature sensor defective.	4. Replace the expansion valve.
	5. When the refrigerant line is clogged or blocked, the low pressure gauge reading will decrease, or a vacuum reading may be shown.	5. Clogged or blocked refrigerant line.	5. Replace refrigerant line.
	6. Evaporator core is frozen.	6. Thermo switch defective.	6. Replace thermo switch.

A/C–Air Conditioning

RESULT	CHECK POINT/SYMPTOM	TROUBLE CAUSE	CORRECTION
Suction (Low Gauge) and Discharge (High Gauge) Pressure Abnormally High	1. Insufficient cooling. 2. Condenser. 3. Suction (Low) pressure hose (Not cold).	1. Excessive refrigerant in system. 2. Condenser clogged or dirty. 3. Air in system.	1. Discharge and recover refrigerant,then Recharge to specified amount. 2. Clean the condenser fin. 3. Evacuate and charge refrigerant.
Suction (Low Gauge) and Discharge (High Gauge) Pressure Abnormally Low	1. Insufficient cooling.	Insufficient refrigerant in system.	• Check for leaks. • Discharge and recover refrigerant. Recharge to specified amount.

A/C–Air Conditioning

MAGNETIC CLUTCH DIAGNOSIS

When the air conditioning switch and the fan control knob (fan switch) are turned on with the engine running, current flows through the thermostat and the compressor relay to activate the magnetic clutch.

The air conditioning can be stopped by turning off the air conditioning switch or the fan control knob (fan switch). However, even when the air conditioning is in operation, the electronic thermostat, the pressure switch or the Engine Control Module (ECM) is used to stop the air conditioning temporarily by turning off the magnetic clutch in the prearranged conditions to reduce the engine load which is being caused by the rise in the engine coolant temperature, and the acceleration of the vehicle, etc.

For the inspection of the relays, switches and units in the flow chart, refer to "INDIVIDUAL INSPECTION."

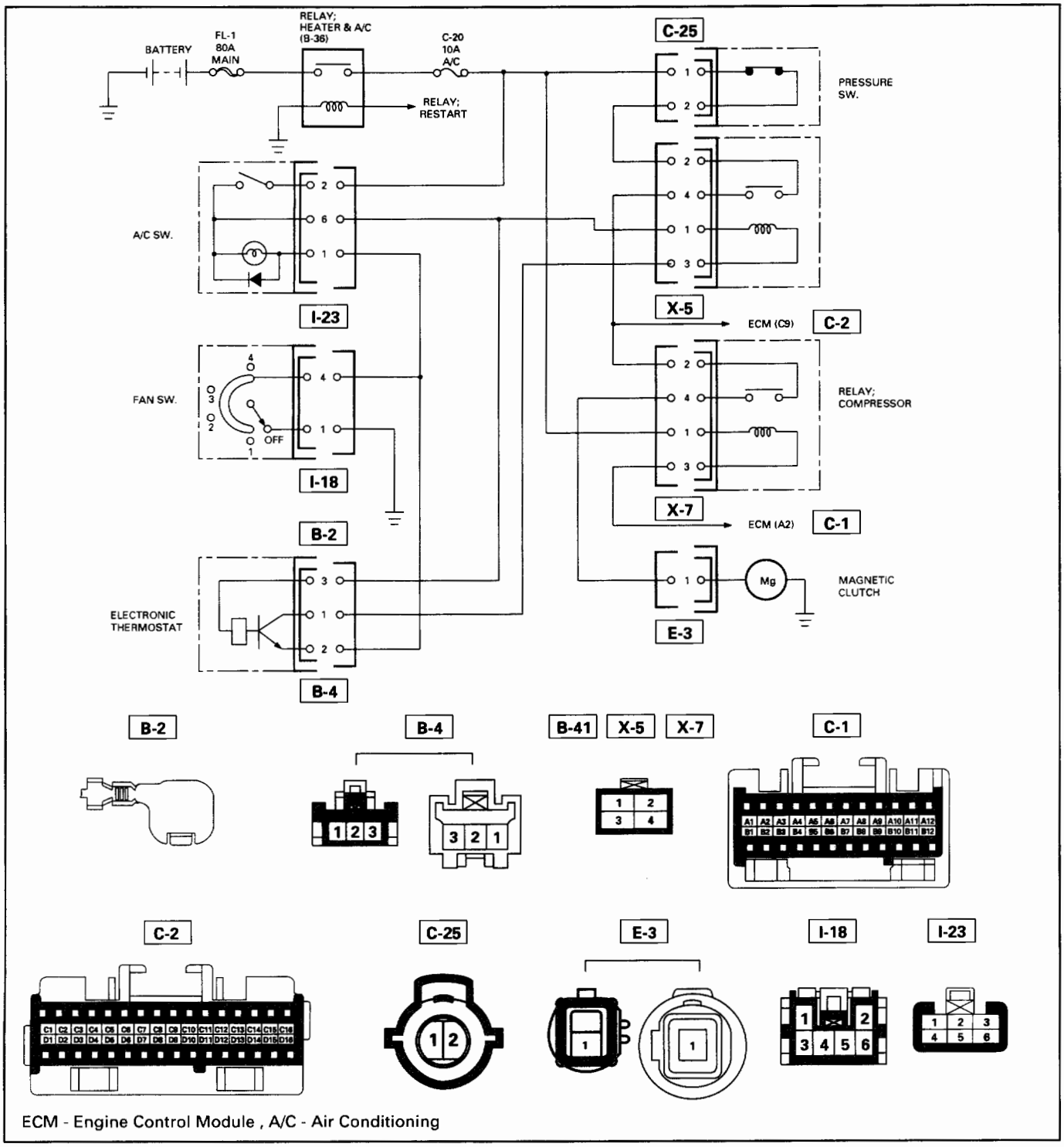

ECM - Engine Control Module , A/C - Air Conditioning

Fig. 1B-11

MAGNETIC CLUTCH DOES NOT RUN

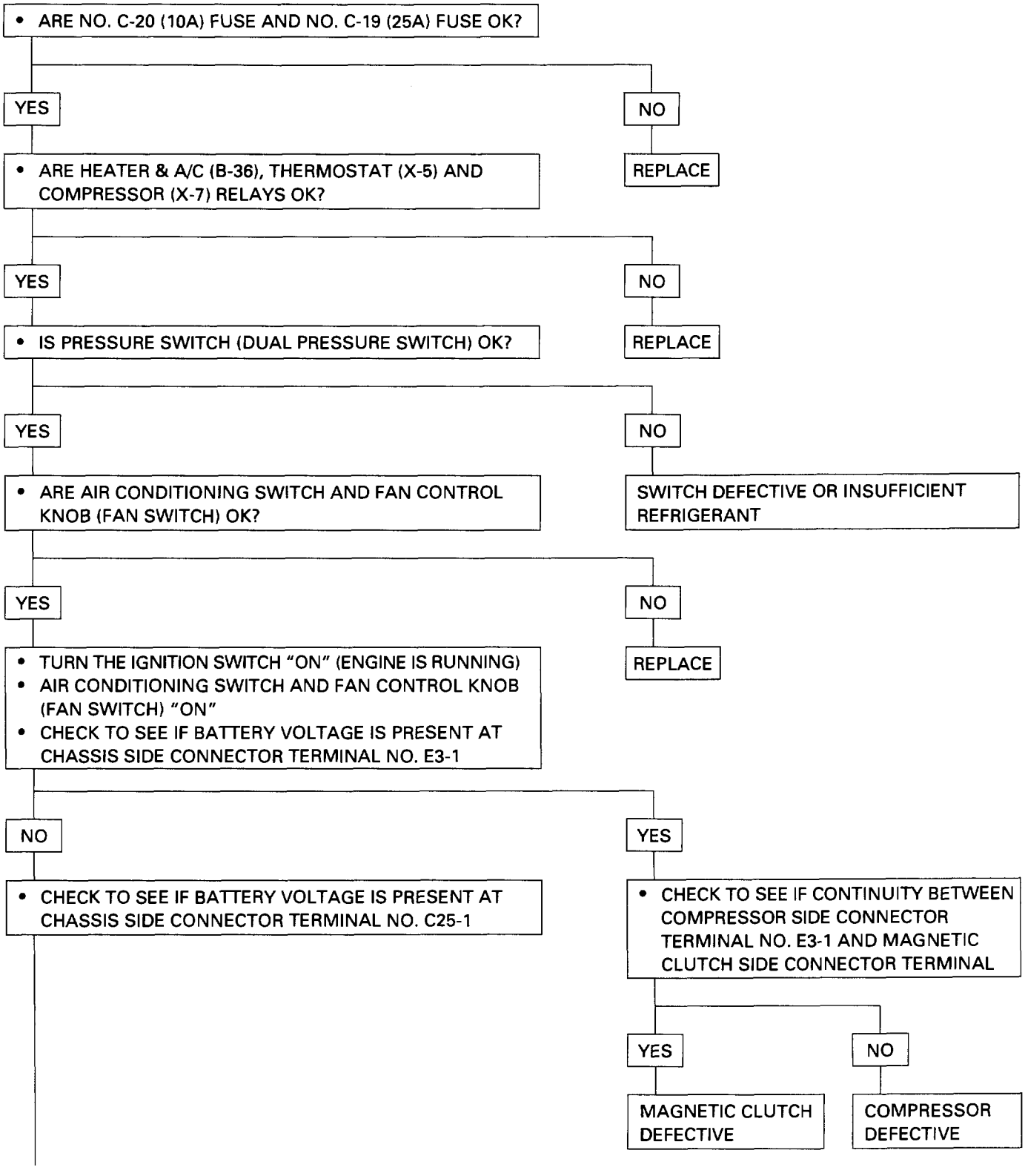

Continued on next page.

Continued from previous page

YES

- DISCONNECT THERMOSTAT RELAY (X-5)
- CHECK TO SEE IF BATTERY VOLTAGE IS PRESENT AT CHASSIS SIDE RELAY TERMINAL NO. X5-2

NO

OPEN CIRCUIT BETWEEN NO. C-20 (10A) FUSE AND NO. C25-1

YES

- CHECK TO SEE IF VOLTAGE (APPROX. 10V) IS PRESENT BETWEEN CHASSIS SIDE RELAY TERMINAL NO. X5-1 AND NO. X5-3

NO

OPEN CIRCUIT BETWEEN NO. C25-2 AND NO. X5-2

YES

- RECONNECT THERMOSTAT RELAY AND DISCONNECT COMPRESSOR RELAY (X-7)
- CHECK TO SEE IF BATTERY VOLTAGE IS PRESENT AT CHASSIS SIDE RELAY TERMINAL NO. X7-2

NO

CONT. TO Ⓐ

YES

- CHECK TO SEE IF CONTINUITY BETWEEN CHASSIS SIDE RELAY TERMINAL NO. X7-4 AND CHASSIS SIDE CONNECTOR TERMINAL NO. E3-1

NO

OPEN CIRCUIT BETWEEN NO. X5-4 AND NO. X7-2

YES

- CHECK TO SEE IF BATTERY VOLTAGE IS PRESENT BETWEEN CHASSIS SIDE RELAY TERMINAL NO. X7-1 AND NO. X7-3

NO

OPEN CIRCUIT

YES

- CHECK TO SEE IF BATTERY VOLTAGE IS PRESENT AT CHASSIS SIDE RELAY TERMINAL NO. X7-1

NO

- CHECK TO SEE IF BATTERY VOLTAGE IS PRESENT AT CHASSIS SIDE CONNECTOR TERMINAL NO. C1-A2

YES

Continued on next page.

NO

OPEN CIRCUIT BETWEEN NO. C-20 (10A) FUSE AND NO. X7-1

NO

OPEN CIRCUIT BETWEEN NO. X7-3 AND NO. C1-A2

Continued on next page.

Continued from previous page

Continued from previous page

- CHECK TO SEE IF CONTINUITY BETWEEN CHASSIS SIDE RELAY TERMINAL NO. X5-4 AND CHASSIS SIDE CONNECTOR TERMINAL NO. C2-C9

NO → OPEN CIRCUIT

YES → ENGINE CONTROL MODULE (ECM) DEFECTIVE → REFER TO SECTION "6E"

Ⓐ

- CHECK TO SEE IF BATTERY VOLTAGE IS PRESENT AT CHASSIS SIDE RELAY TERMINAL NO. X5-1

YES

- RECONNECT THERMOSTAT RELAY
- CHECK TO SEE IF BATTERY VOLTAGE IS PRESENT AT CHASSIS SIDE CONNECTOR TERMINAL NO. B4-3

YES

- CHECK TO SEE IF BATTERY VOLTAGE (APPROX. 10V) IS PRESENT AT CHASSIS SIDE CONNECTOR TERMINAL NO. B4-1

YES

- CHECK TO SEE IF CONTINUITY BETWEEN CHASSIS SIDE CONNECTOR TERMINAL NO. B4-2 AND NO. I18-4

NO → OPEN CIRCUIT BETWEEN NO. B4-2 AND NO. I18-4 OR POOR GROUND (FAN SWITCH GROUND CIRCUIT)

YES → ELECTRONIC THERMOSTAT DEFECTIVE

NO → OPEN CIRCUIT BETWEEN NO. I23-6 AND NO. B4-3

NO

- CHECK TO SEE IF BATTERY VOLTAGE IS PRESENT AT CHASSIS SIDE CONNECTOR TERMINAL NO. I23-2

NO → OPEN CIRCUIT BETWEEN NO. C-20 (10A) FUSE AND NO. I23-2

YES → OPEN CIRCUIT BETWEEN X5-1 AND NO. I23-6

NO → OPEN CIRCUIT BETWEEN NO. X5-3 AND NO. B4-1

INDIVIDUAL INSPECTION

FAN CONTROL KNOB (FAN SWITCH) AND AIR CONDITIONING (A/C) SWITCH (Fig. 1B-12)

1. Check for continuity between fan switch and A/C switch side connector terminals.

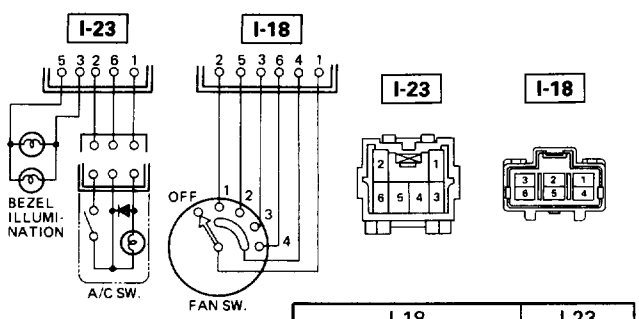

	Terminal / SW position	I-18 1	I-18 2	I-18 3	I-18 4	I-18 5	I-18 6	I-23 1	I-23 2	I-23 6
FAN SW.	OFF									
	1	○	○		○					
	2	○			○	○				
	3	○		○	○					
	4	○			○		○			
A/C SW.	OFF							○		○
	ON							○	○	○

Fig. 1B-12

HEATER & A/C (B-36), THERMOSTAT (X-5) AND COMPRESSOR (X-7) RELAY (Fig. 1B-13)

1. Disconnect relays and check for continuity and resistance between relay terminals.
   - For handling of these relays, refer to Fig. 1A-10.

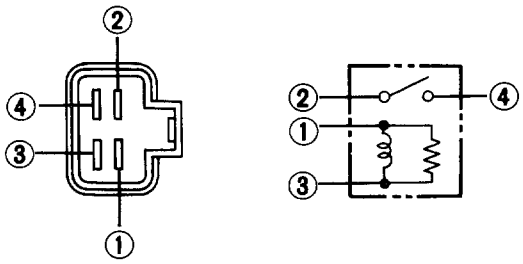

② – ④ ..... No continuity
(When battery voltage is applied between ① – ③) ② – ④ ..... Continuity

Fig. 1B-13

PRESSURE SWITCH (Fig. 1B-14)

1. Disconnect pressure switch connector and check for continuity between pressure switch side connector terminals.

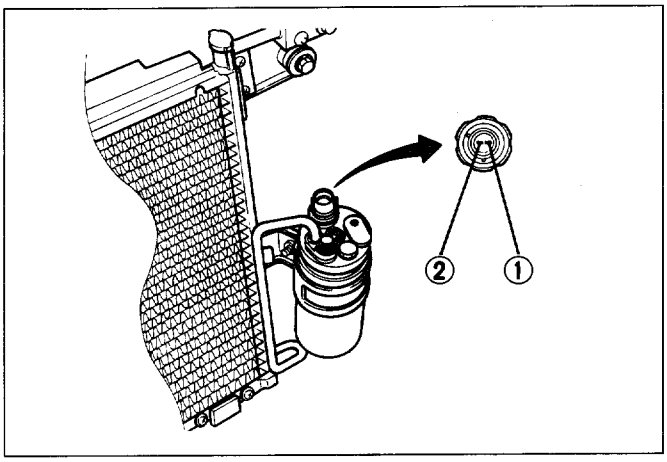

Fig. 1B-14

ON-VEHICLE SERVICE

GENERAL REPAIR PROCEDURE

Precautions for Replacement or Repair of Air Conditioning Parts

There are certain procedures, practices and precautions that should be followed when servicing air conditioning systems:

- Keep your work area clean.
- Always wear safety goggle and protective gloves when working on refrigerant systems.
- Beware of the danger of carbon monoxide fumes caused by running the engine.
- Beware of discharged refrigerant in enclosed or improperly ventilated garages.
- Always disconnect the negative battery cable and discharge and recover the refrigerant whenever repairing the air conditioning system.
- When discharging and recovering the refrigerant, do not allow refrigerant to discharge too fast; it will draw compressor oil out of the system.
- Keep moisture and contaminants out of the system. When disconnecting or removing any lines or parts, use plugs or caps to close the fittings immediately.
  Never remove the caps or plugs until the lines or parts are reconnected or installed.
- When disconnecting or reconnecting the lines, use two wrenches to support the line fitting, to prevent from twisting or other damage.
- Always install new O-rings whenever a connection is disassembled.
- Before connecting any hoses or lines, apply new specified compressor oil to the O-rings.
- When removing and replacing any parts which require discharging the refrigerant circuit, the operations described in this section must be performed in the following sequence:
  1. Use the J-39500 (ACR[4]: HFC-134a Refrigerant Recovery/Recycling/Recharging/System) or equivalent to thoroughly discharge and recover the refrigerant.
  2. Remove and replace the defective part.
  3. After evacuation, charge the air conditioning system and check for leaks.

Repair of Refrigerant Leaks

Refrigerant Line Connections

Install new O-rings, if required. When disconnecting or connecting lines, use two wrenches to prevent the connecting portion from twisting or becoming damaged. (Fig. 1B-15)

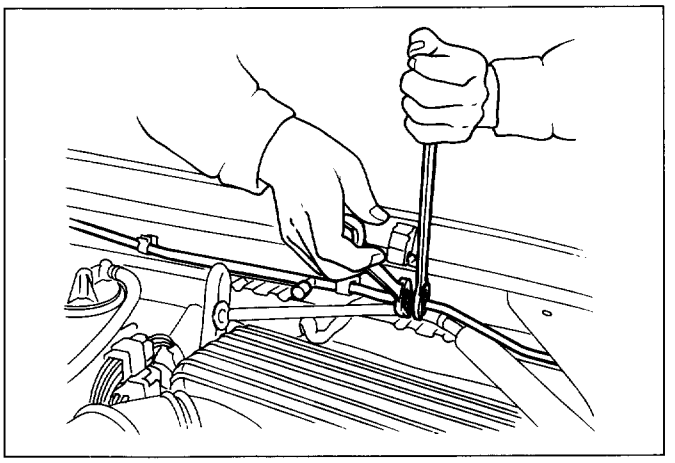

Fig. 1B-15

When connecting the refrigerant line at the block joint, securely insert the projecting portion of the joint portion into the connecting hole on the unit side and secure with a bolt.
Apply specified compressor oil to the O-rings prior to connecting. (Fig. 1B-16)

CAUTION:
Compressor (PAG) oil to be used varies according to compressor model. Be sure to apply oil specified for the model of compressor.

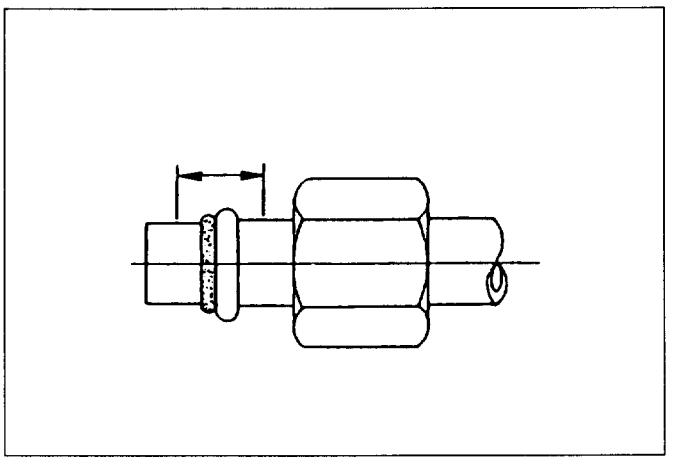

Fig. 1B-16

O-rings must be closely aligned with raised portion of refrigerant line. (Fig. 1B-17)
Insert nut into union. First tighten nut by hand as much as possible. Then, tighten nut to specified torque. (Fig. 1B-18)

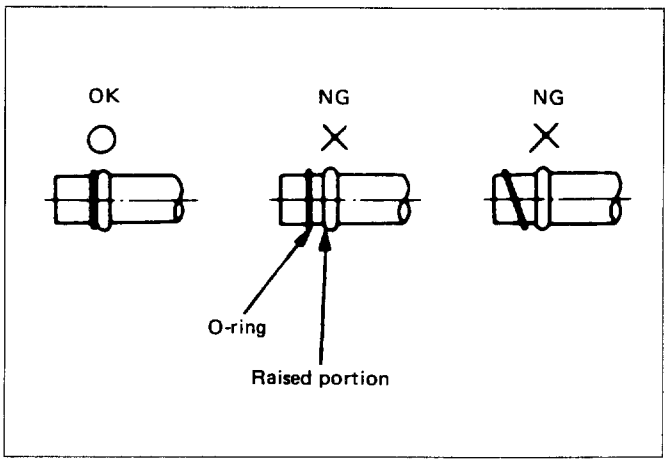

Fig. 1B-17

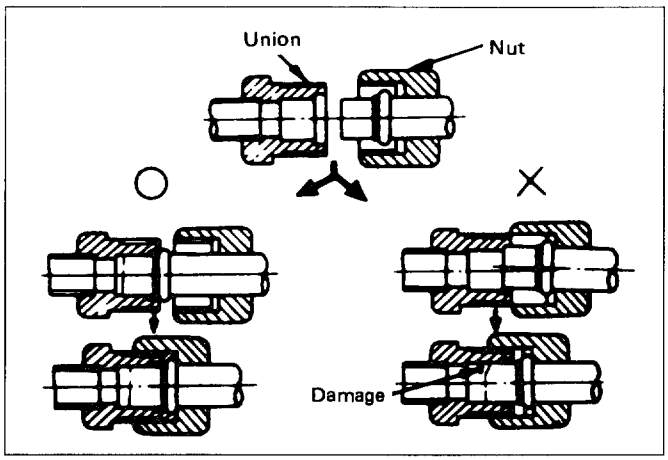

Fig. 1B-18

Leak at Refrigerant Line Connections

1. Check the torque on the refrigerant line fitting and, if too loose, tighten to the specified torque.
   - Use two wrenches to prevent twisting and damage to the line.
   - Do not over tighten.
2. Perform a leak test on the refrigerant line fitting.
3. If the leak is still present, discharge and recover the refrigerant from the system.
4. Replace the O-rings.
   - O-rings cannot be reused. Always replace with new ones.
   - Be sure to apply specified compressor oil to the new O-rings.
5. Retighten the refrigerant line fitting to the specified torque.
   - Use two wrenches to prevent twisting and damage to the line.
6. Evacuate, charge and retest the system.

Leaks in the Hose

If the compressor inlet or outlet hose is leaking, the entire hose must be replaced. Refrigerant hose must not be cut or spliced for repair.

1. Locate the leak.
2. Discharge and recover the refrigerant.
3. Remove the hose assembly.
   - Cap the open connections at once.
4. Connect the new hose assembly.
   - Use two wrenches to prevent twisting or damage to the hose fitting.
   - Tighten the hose fitting to the specified torque.
5. Evacuate, charge and test the system.

Compressor Leaks

If leaks are located around the compressor shaft seal or shell, replace or repair the compressor.

Recovery, Recycling, Evacuation and Charging Handling HFC-134a:

Air conditioning systems contain HFC-134a.
This is a chemical mixture which requires special handling procedures to avoid personal injury.

- Always wear safety goggles and protective gloves.
- Always work in a well-ventilated area. Do not weld or steam clean on or near any vehicle-installed air conditioning lines or components.
- If HFC-134a should come in contact with any part of the body, flush the exposed area with cold water and immediately seek medical help.
- If it is necessary to transport or carry any container of HFC-134a in a vehicle, do not carry it in the passenger compartment.
- If it is necessary to fill a small HFC-134a container from a large one, never fill the container completely. Space should always be allowed above the liquid for expansion.
- HFC-134a and R-12 should never be mixed as their compositions are not the same.
- HFC-134a PAG oil tends to absorb moisture more quickly than R-12 mineral oil and, therefore, should be handled more carefully.
- Keep HFC-134a containers stored below 40°C (100°F).

WARNING:

- **SHOULD HFC-134a CONTACT YOUR EYE(S), CONSULT A DOCTOR IMMEDIATELY.**
- **DO NOT RUB THE AFFECTED EYE(S). INSTEAD, SPLASH QUANTITIES OF FRESH COLD WATER OVER THE AFFECTED AREA TO GRADUALLY RAISE THE TEMPERATURE OF THE REFRIGERANT ABOVE THE FREEZING POINT.**
- **OBTAIN PROPER MEDICAL TREATMENT AS SOON AS POSSIBLE. SHOULD THE HFC-134a TOUCH THE SKIN, THE INJURY MUST BE TREATED THE SAME AS SKIN WHICH HAS BEEN FROSTBITTEN OR FROZEN.**

Refrigerant Recovery

The refrigerant must be discharged and recovered by using the J-39500 (ACR[4]: HFC-134a Refrigerant Recovery/Recycling/Recharging/System) or equivalent before removing or mounting air conditioning parts.

1. Connect the high and low charging hoses of the ACR[4] (or equivalent) as shown below. (Fig. 1B-19)

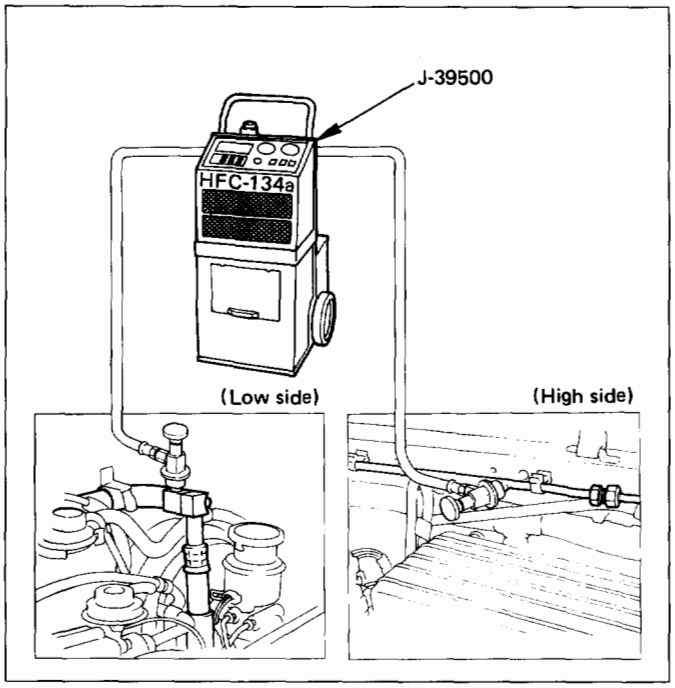

Fig. 1B-19

2. Recover the refrigerant by following the Manufacturer's Instructions.
3. When a part is removed, put a cap or a plug on the connecting portion so that dust, dirt or moisture cannot get into it.

Refrigerant Recycling

Recycle the refrigerant recovered by J-39500 (ACR[4]: HFC-134a Refrigerant Recovery/Recycling/Recharging/System) or equivalent.

For the details of the actual operation, follow the steps in the ACR[4] (or equivalent) Manufacturer's Instructions.

Evacuation of the Refrigerant System (Fig. 1B-20)

NOTE:

Explained below is a method using a vacuum pump. Refer to the ACR[4] (or equivalent) manufacturer's instructions when evacuating the system with a ACR[4] (or equivalent).

Air and moisture in the refrigerant will cause problems in the air conditioning system.

Therefore, before charging the refrigerant, be sure to evacuate air and moisture thoroughly from the system.

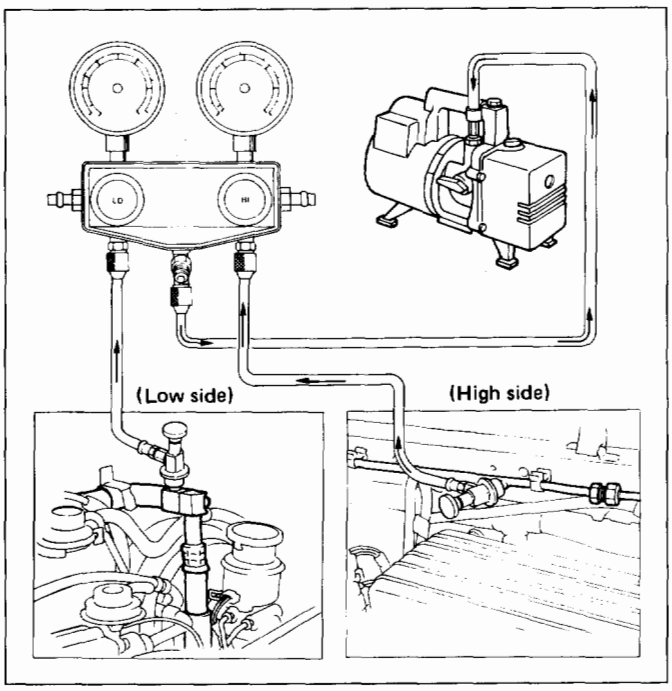

Fig. 1B-20

1. Connect the gauge manifold.
   - High-pressure valve (HI) – Discharge-side
   - Low-pressure valve (LOW) – Suction-side
2. Discharge and recover the refrigerant.
3. Connect the center hose of the gauge manifold set to the vacuum pump inlet.
4. Operate the vacuum pump, open shutoff valve and then open both hand valves.
5. When the low-pressure gauge indicates approx. 750 mmHg (30 inHg), continue the evacuation for 5 minutes or more.
6. Close both hand valves and stop the vacuum pump.
7. Check to ensure that the pressure does not change after 10 minutes or more.
   - If the pressure changes, check the system for leaks.
   - If leaks occur, retighten the refrigerant line connections and repeat the evacuation steps.
8. If no leaks are found, again operate the vacuum pump for 20 minutes or more. After confirming that the gauge manifold pressure is at 750 mmHg (30 inHg), close both hand valves.
9. Close positive shutoff valve.
   Stop the vacuum pump and disconnect the center hose from the vacuum pump.

Charging the Refrigerant System

There are various methods of charging refrigerant into the air conditioning system.
These include using J-39500 (ACR^4: HFC-134a Refrigerant Recovery/Recycling/Recharging/System) or equivalent and direct charging with a weight scale charging station.

Charging procedure

- **ACR^4 (or equivalent) method**

For the charging of refrigerant recovered by ACR^4 (or equivalent), follow the manufacturer's instruction. (Fig. 1B-21)

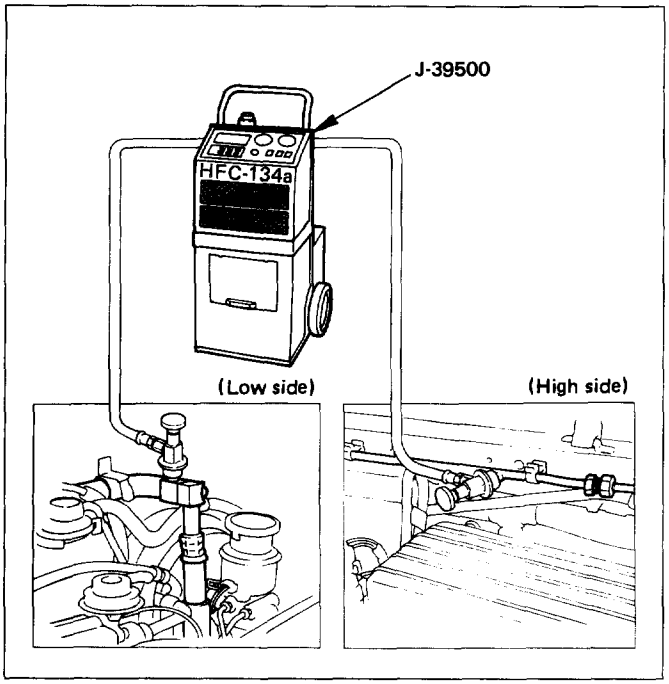

Fig. 1B-21

- **Direct charging with a weight scale charging station method (Fig. 1B-22, Fig. 1B-23)**

1. Make sure the evacuation process is correctly completed.
2. Connect the center hose of the manifold gauge to the weight scale.
3. Connect the low pressure charging hose of the manifold gauge to the low pressure side service valve of the vehicle.
4. Connect the high pressure charging hose of the manifold gauge to the high pressure side service valve of the vehicle.

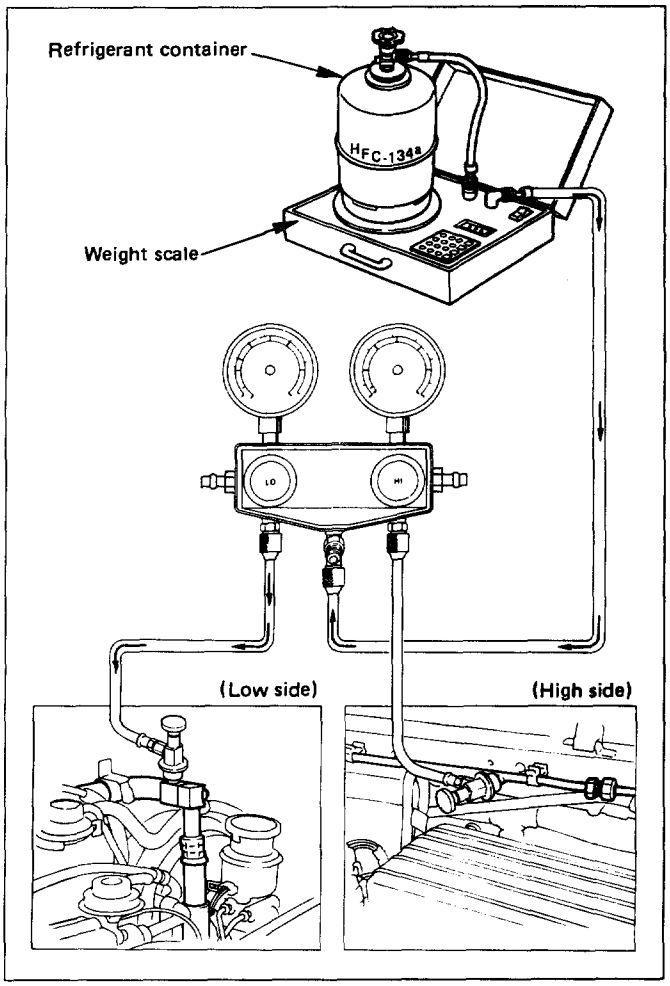

Fig. 1B-22

5. Place the refrigerant container up right on a weight scale.
   Note the total weight before charging the refrigerant.

5a. Open refrigerant container valve.

5b. Open low side valve on the manifold gauge set.
   Refer to the manufacturer's instruction's for a weight scale charging station.

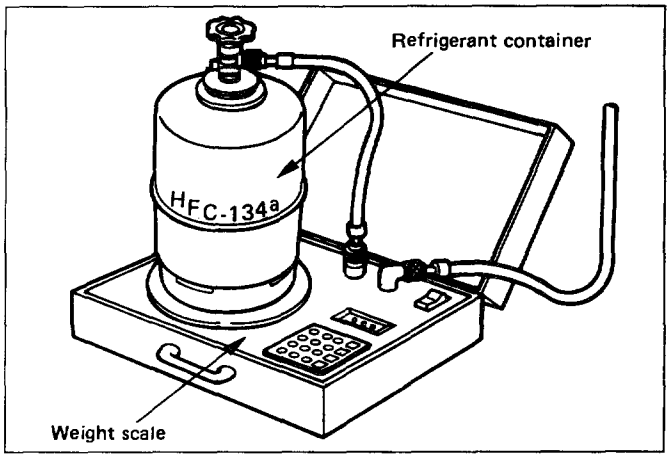

Fig. 1B-23

6. Perform system leak test.
   - Charge the system with approx. 200 g (0.44 lbs) of HFC-134a.
   - Make sure the high pressure valve of the manifold gauge is closed.
   - Check to ensure that the degree of pressure does not change.
   - Check for refrigerant leaks by using a HFC-134a leak detector.
   - If a leak occurs, recover the refrigerant. Repair the leak, and start all over again from the first step of evacuation.
7. If no leaks are found, continue charging refrigerant to the air conditioning system.
   - Charge the refrigerant until the scale reading decreases by the amount of the charge specified.

Specified amount	g (lbs.)	750 (1.65)

   - If charging the system becomes difficult:
     (1) Run the engine at idle and close all the vehicle doors.
     (2) Turn A/C switch "ON".
     (3) Set the fan switch to its highest position.
     (4) Set air source selector lever to "CIRC".
     (5) Slowly open the low side valve on the manifold gauge set.

WARNING: BE ABSOLUTELY SURE NOT TO OPEN THE HIGH PRESSURE VALVE OF THE MANIFOLD GAUGE. SHOULD THE HIGH PRESSURE VALVE BE OPENED, THE HIGH PRESSURE REFRIGERANT WOULD FLOW BACKWARD, AND THIS MAY CAUSE THE REFRIGERANT CONTAINER TO BURST.

8. When finished with the refrigerant charging, close the low pressure valve of the manifold gauge and container valve.
9. Check for refrigerant leaks.

Checking the A/C system

1. Run the engine and close all the vehicle doors.
2. Turn A/C switch "ON", set the fan switch to its highest position, set air source lever to "CIRD" and set temperature lever to full cool position.
3. Check the high and low pressure of the manifold gauge.
   - Immediately after charging refrigerant, both high and low pressure are slightly high, but they settle down to the pressure guidelines shown below:
     Ambient temperature: 25–30°C (77 – 86°F)
     Pressure guidelines:
     - High-pressure side;
       Approx. 1372.9–1863.3kPa (199.1–270.2psi)
     - Low-pressure side;
       Approx. 147.1 – 294.2 kPa (21.3–42.7 psi)
   - If an abnormal pressure is found, refer to "CHECKING REFRIGERANT SYSTEM WITH MANIFOLD GAUGE" in this section.
4. Put your hand in front of the air outlet and move the temperature control lever of the control panel to different positions. Check if the outlet temperature changes as selected by the control knob.

COMPRESSOR

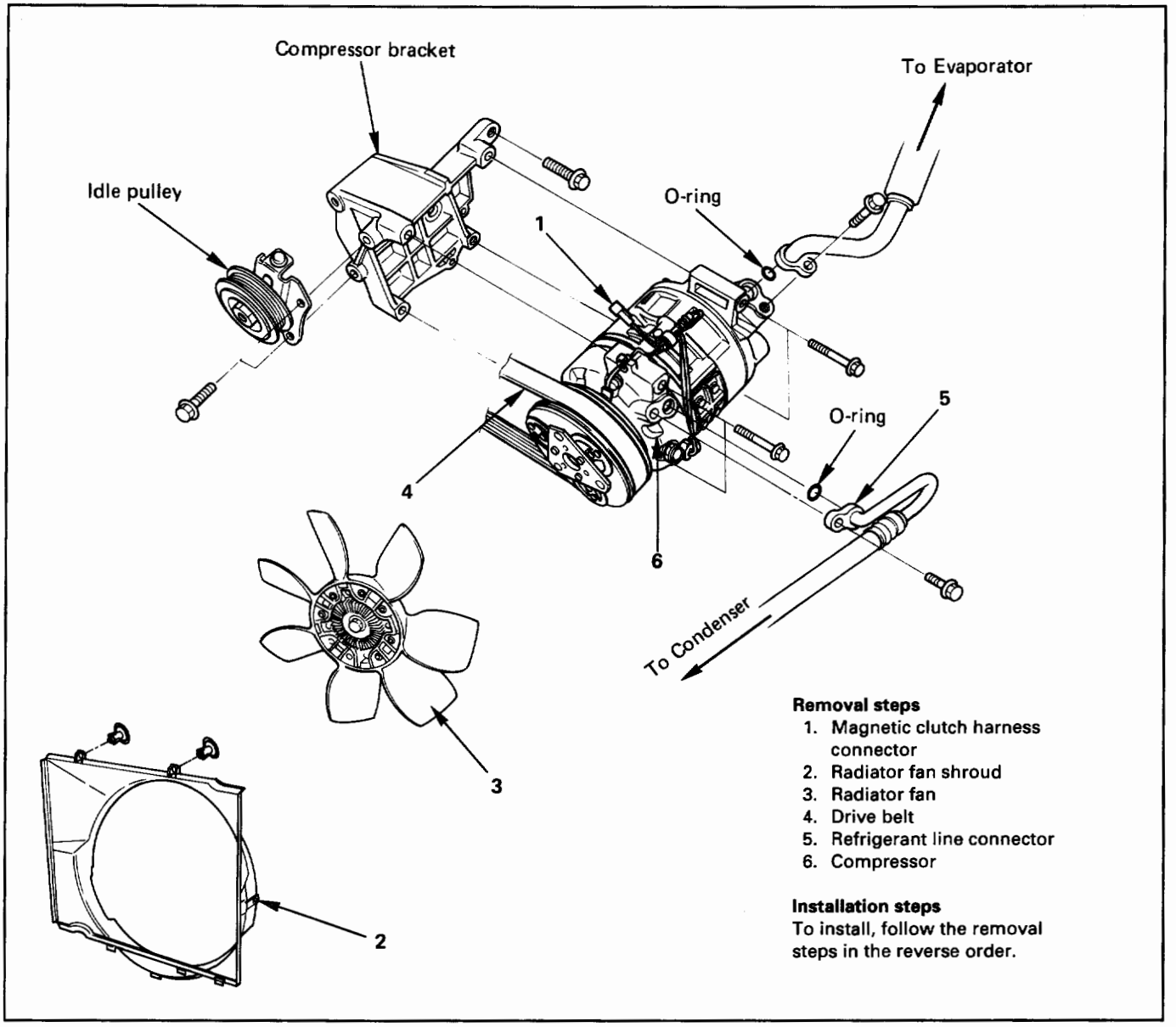

Fig. 1B-24

REMOVAL

Preparation:

Disconnect the battery ground cable

Discharge and recover refrigerant (Refer to "REFRIGERANT RECOVERY" in this section.)

1. **Magnetic clutch harness connector**
2. **Radiator fan shroud**
3. **Radiator fan**
   - When the fan is removed, be sure to tighten the fan fixing nuts temporarily to their original positions.
4. **Drive belt**
   - Loosen idle pulley center nut and tension adjustment bolt, then remove the drive belt (Fig. 1B-25).

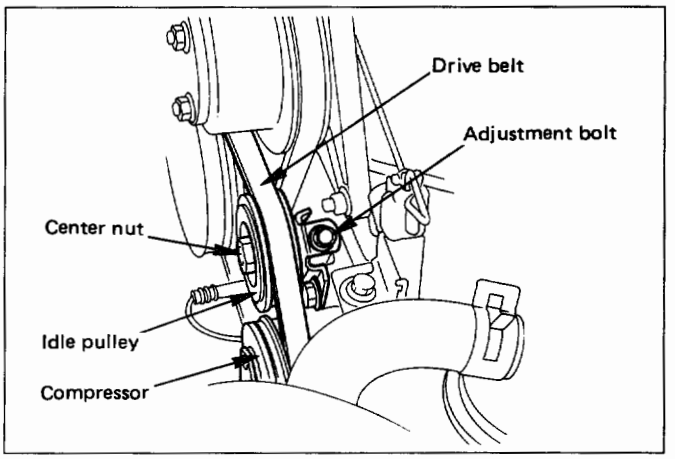

Fig. 1B-25

5. **Refrigerant line connector**
   - When removing the line connector, the connecting part should immediately be plugged or capped to prevent foreign matter from being mixed into the line.
6. **Compressor**

INSTALLATION

6. **Compressor**
   - Tighten the compressor fixing bolts to the specified torque.

Torque	N·m (lb·ft)	19 (14)

5. **Refrigerant line connector**
   - Tighten the refrigerant line connector fixing bolts to the specified torque.

Torque	N·m (lb·ft)	15 (11)

   - O-rings cannot be reused. Always replace with new ones.
   - Be sure to apply new compressor oil to the O-rings when connecting refrigerant lines.
4. **Drive belt**
   - Push the drive belt with the force of 22 lbs., and adjust the drive belt tension by tightening idle pulley tension adjustment bolt, until the 10 mm (0.4 in) deflection of the belt is obtained. Then tighten the pulley center nut (Fig. 1B-26).

Torque	N·m (lb·ft)	42 (31)

3. **Radiator fan**
2. **Radiator fan shroud**
1. **Magnetic clutch harness connector**

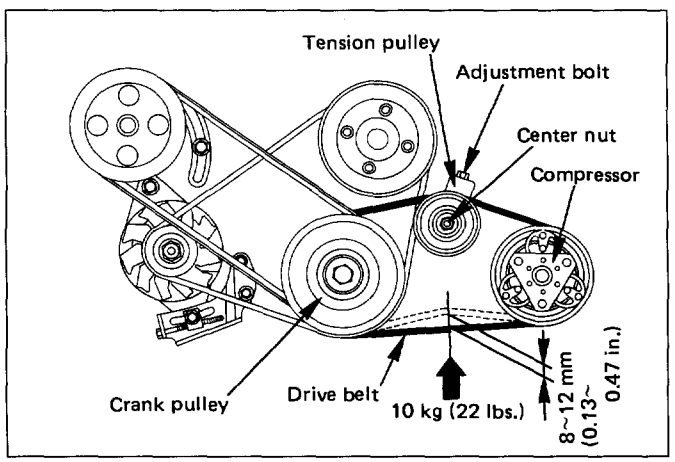

Fig. 1B-26

NEW COMPRESSOR INSTALLATION

The new compressor is filled with 150cc (5.0 fl.oz.) of compressor oil and nitrogen gas. When mounting the compressor on the vehicle, perform the following steps;

1. Gently release nitrogen gas from the suction side of the new compressor (Fig. 1B-27).
   - Take care not to let the compressor oil flow out.
   - Inspect O-rings and replace if necessary.

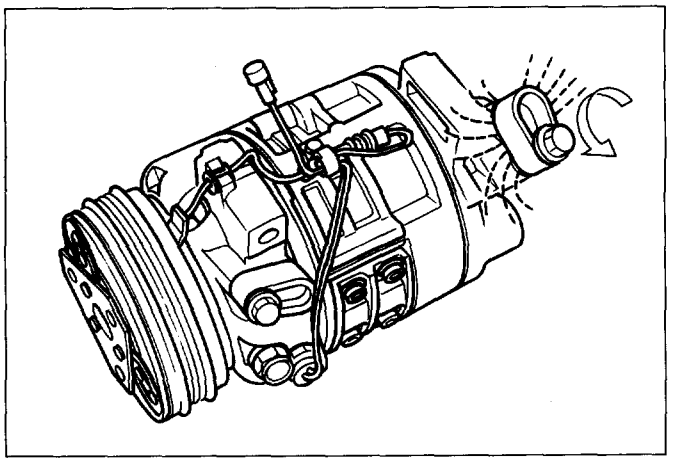

Fig. 1B-27

2. Turn the compressor several times by hand and release the compressor oil in the rotor.
3. When installing on a new system, the compressor should be installed as it is. When installing on a used system, the compressor should be installed after adjusting the amount of compressor oil.
   (Refer to Section 1D "COMPRESSOR OVERHAUL" for General Information.)

CONDENSER ASSEMBLY

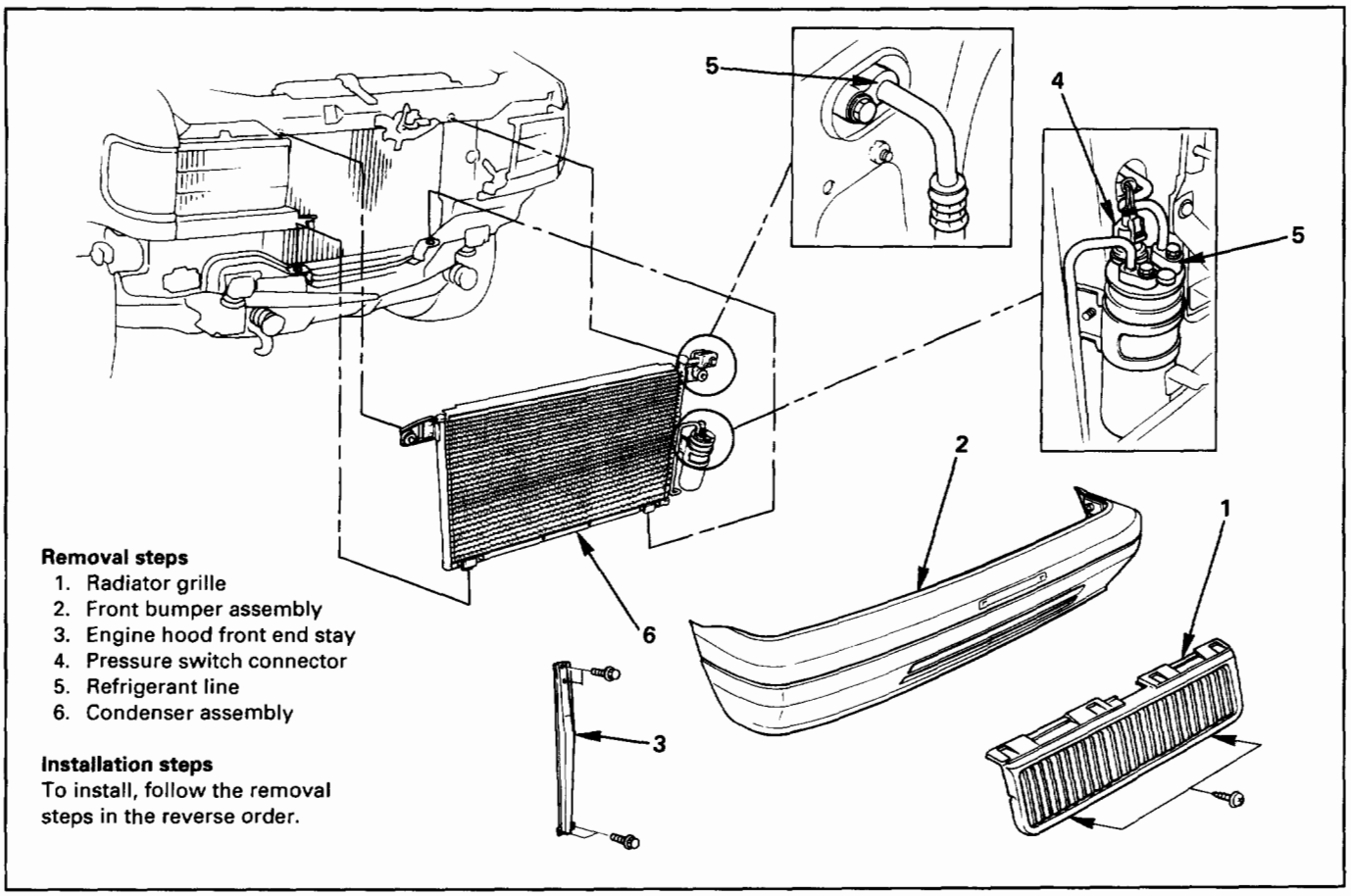

Fig. 1B-28

REMOVAL

Preparation:

Disconnect the battery ground cable.

Discharge and recover refrigerant (Refer to "REFRIGERANT RECOVERY" in this section.)

1. **Radiator grille**
2. **Front bumper assembly**
   - Refer to Section 2B "BUMPERS".
3. **Engine hood front end stay**
4. **Pressure switch connector**
5. **Refrigerant line**
   - When removing the line connector, the connecting part should immediately be plugged or capped to prevent foreign matter from being mixed into the line.
6. **Condenser assembly**

INSTALLATION

6. **Condenser assembly**
   - If installing a new condenser, be sure to add 30cc (1.0 fl.oz.) of new compressor oil to a new one.
   - Tighten the condenser fixing bolts to the specified torque.

Torque	N·m (lb·in)	6 (52)

5. **Refrigerant line**
   - Tighten the inlet line connector fixing bolt to the specified torque.

Torque	N·m (lb·in)	15 (11)

   - Tighten the outlet line connector fixing bolt to the specified torque.

Torque	N·m (lb·in)	6 (52)

   - O-rings cannot be reused. Always replace with new ones.
   - Be sure to apply new compressor oil to the O-rings when connecting refrigerant line.
4. **Pressure switch connector**
3. **Engine hood front end stay**
2. **Front bumper assembly**
1. **Radiator grille**

RECEIVER/DRIER

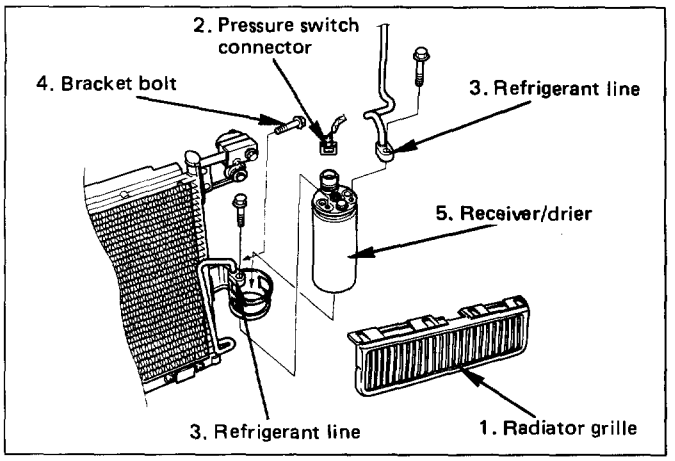

Fig. 1B-29

REMOVAL

Preparation:

Disconnect the battery ground cable.
Discharge and recover refrigerant (Refer to "REFRIGERANT RECOVERY" in this section.)

1. **Radiator grille**
2. **Pressure switch connector**
3. **Refrigerant line**
   - When removing the line connected part, the connecting part should immediately be plugged or capped to prevent foreign matter from being mixed into the line.
4. **Bracket bolt**
5. **Receiver/drier**
   - Loosen the bolt, then, using care not to touch or bend the refrigerant line, carefully pull out the receiver/drier.

INSTALLATION

To install, follow the removal steps in the reverse order, noting the following points:

1. If installing a new receiver/drier, be sure to add 30 cc (1.0 fl.oz.) of new compressor oil to a new one.
2. Put the receiver/drier in the bracket, and connect with the refrigerant line. Check that no excessive force is imposed on the line. Fasten the bracket bolt to the receiver/drier.
3. Tighten the line to the specified torque.

Torque	N·m (lb·in)	6 (52)

4. O-rings cannot be reused. Always replace with new ones.
5. Be sure to apply new compressor oil to the O-rings when connecting refrigerant line.

PRESSURE SWITCH

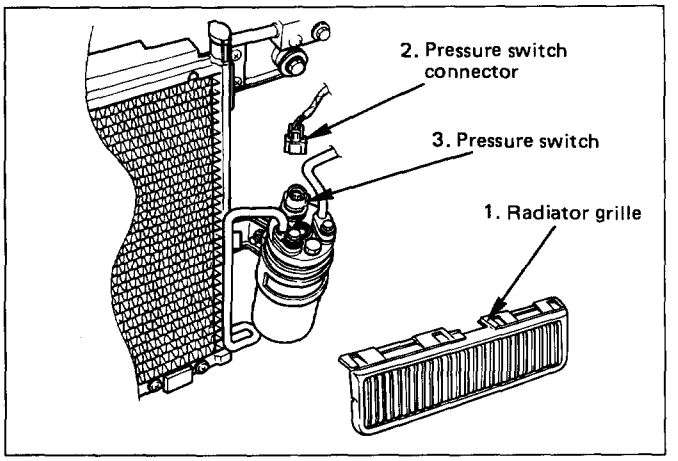

Fig. 1B-30

REMOVAL

Preparation:

Disconnect the battery ground cable.
Discharge and recover refrigerant (Refer to "REFRIGERANT RECOVERY" in this section.)

1. **Radiator grille**
2. **Pressure switch connector**
3. **Pressure switch**
   - When removing the switch connected part, the connecting part should immediately be plugged or capped to prevent foreign matter from being mixed into the line.

INSTALLATION

To install, follow the removal steps in the reverse order, noting the following points:

1. O-ring cannot be reused. Always replace with a new one.
2. Be sure to apply new compressor oil to the O-ring when connecting pressure switch.
3. Tighten the pressure switch to the specified torque.

Torque	N·m (lb·in)	13 (113)

EVAPORATOR ASSEMBLY

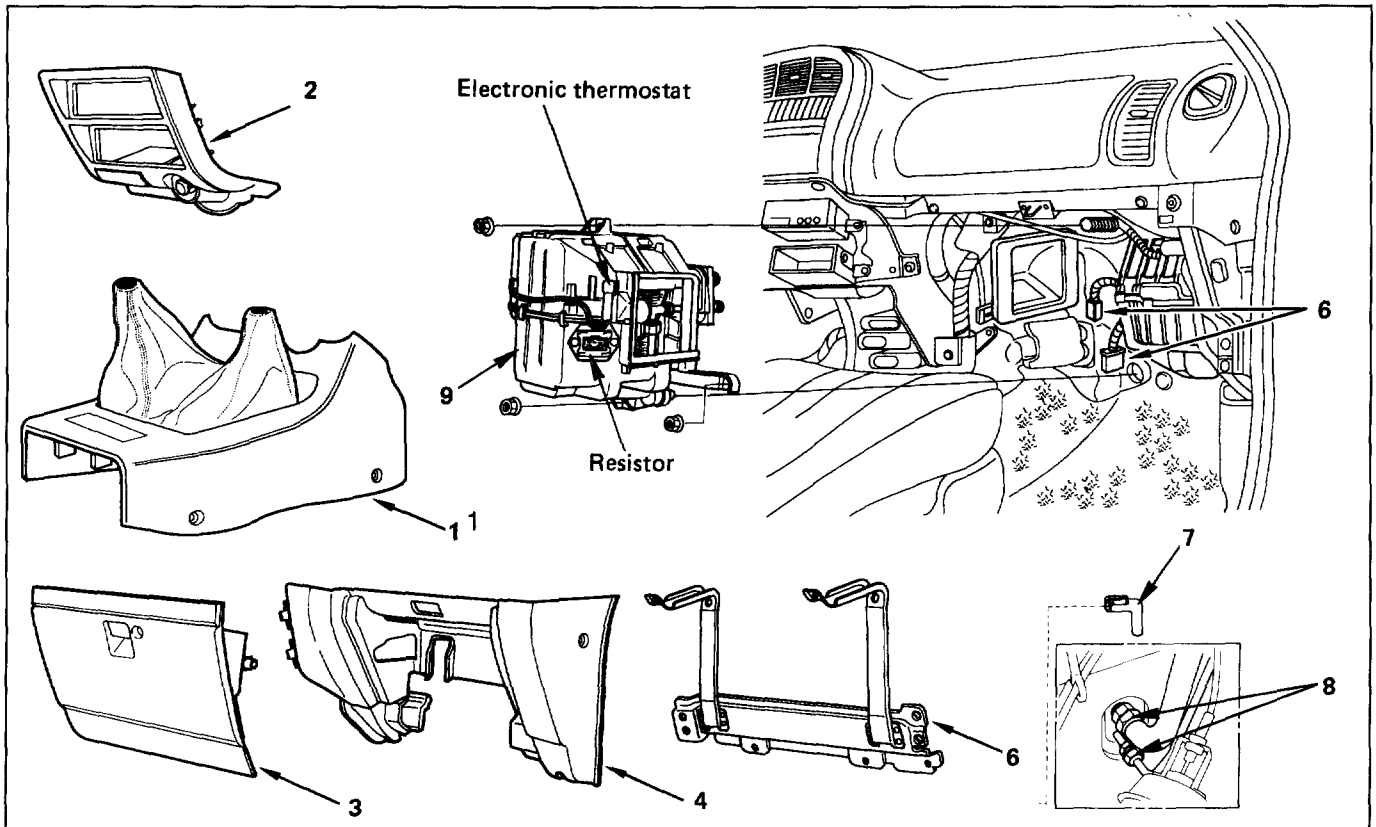

Removal steps
1. Front console assembly
2. Lower cluster assembly
3. Glove box
4. Instrument panel passenger lower cover assembly
5. Passenger knee bolster reinforcement assembly
6. Resister and electronic thermostat connector
7. Drain hose
8. Refrigerant line
9. Evaporator assembly

Installation steps
To install, follow the removal in the reverse order.

Fig. 1B-31

REMOVAL

Preparation:

Disconnect battery ground cable.

Discharge and recover refrigerant (Refer to "REFRIGERANT RECOVERY"in this section.)

1. **Front console assembly**
2. **Lower cluster assembly**
3. **Glove box**
4. **Instrument panel passenger lower cover assembly**
5. **Passenger knee bolster reinforcement assembly**
   - Refer to Section 10 "BODY" for INSTRUMENT PANEL ASSEMBLY removal procedure.
6. **Resister and electronic thermostat connector (Fig. 1B-32)**
7. **Drain hose**
8. **Refrigerant line**
   - Use back-up wrench when disconnecting and reconnecting the refrigerant lines.
   - When removing the refrigerant line connected part, the connecting part should immediately be plugged or capped to prevent foreign matter from being mixed into the line.
9. **Evaporator assembly**

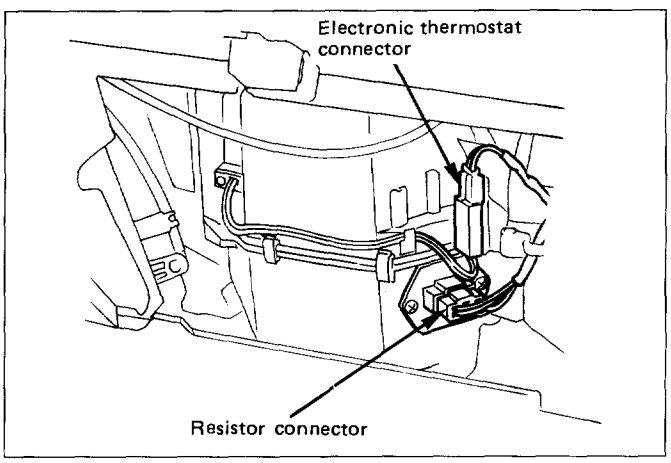

Fig. 1B-32

INSTALLATION

To install, follow the removal steps in the reverse order, noting the following points:

1. To install a new evaporator assembly, add 50cc (1.7 fl.oz.) of new compressor oil to a new core.
2. Tighten the refrigerant outlet line to the specified torque.

Torque	N·m (lb·ft)	25 (18)

3. Tighten the refrigerant inlet line to the specified torque.

Torque	N·m (lb·ft)	15 (11)

4. O-rings cannot be reused. Always replace with new ones.
5. Be sure to apply new compressor oil to the O-rings when connecting lines.

ELECTRONIC THERMOSTAT, EVAPORATOR CORE AND/OR EXPANSION VALVE

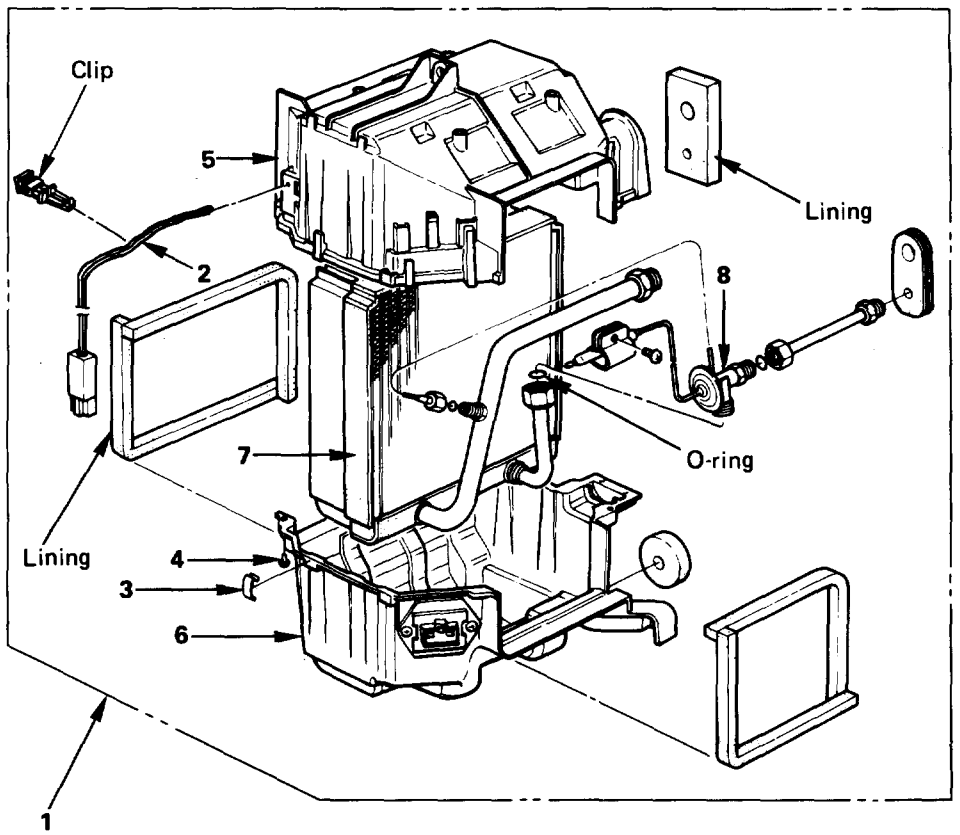

Removal steps
1. Evaporator assembly
2. Electronic thermostat
3. Clip
4. Attaching screw
5. Upper case
6. Lower case
7. Evaporator core
8. Expansion valve

Installation steps
To install, follow the removal steps in the reverse order.

Fig. 1B-33

REMOVAL

Preparation:

Disconnect the battery ground cable
Discharge and recover refrigerant (Refer to "REFRIGERANT RECOVERY" in this section.)

1. **Evaporator assembly**
   - Refer to "EVAPORATOR ASSEMBLY" removal procedure in this section.
2. **Electronic thermostat**
   - Remove the sensor fixing clip.
   - Pull the sensor from the evaporator assembly.
3. **Clip**
4. **Attaching screw**
5. **Upper case**
6. **Lower case**
   - Slit the case parting face with a knife since the lining is separated when removing the evaporator (Fig. 1B-34).
   - Lift to remove the upper case (Fig. 1B-35).
7. **Evaporator core (Fig. 1B-36)**
8. **Expansion valve**
   - Tear off the insulator carefully.
   - Remove the sensor fixing clip.
   - Use a back-up wrench when disconnecting all refrigerant pipes.

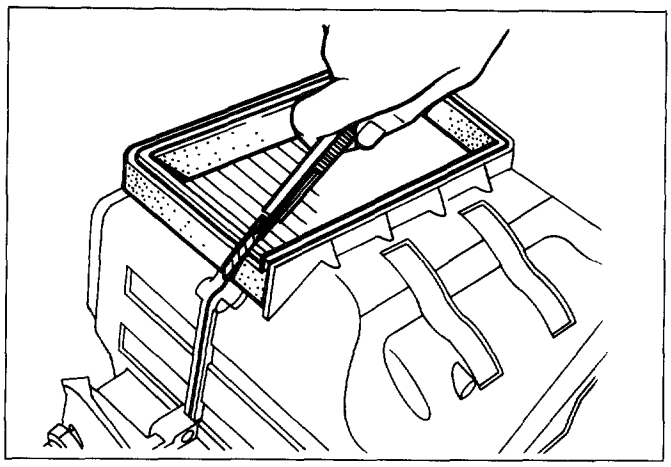

Fig. 1B-34

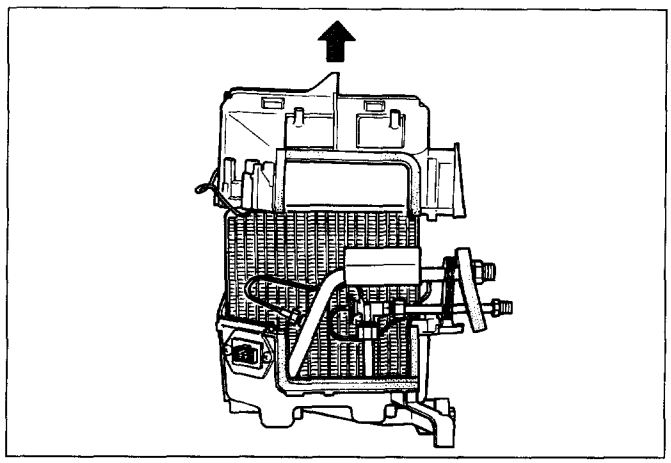

Fig. 1B-35

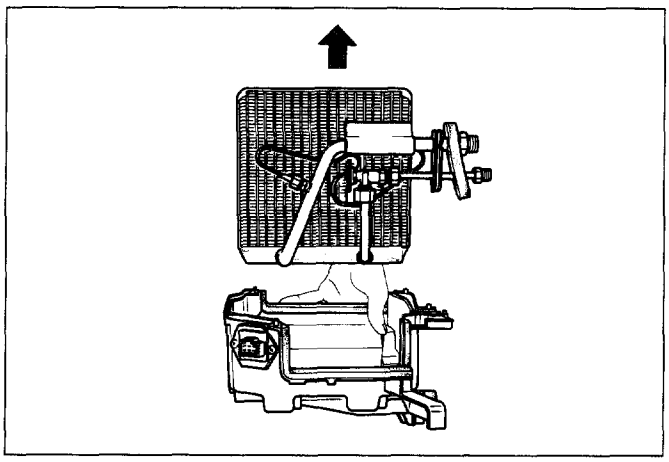

Fig. 1B-36

INSTALLATION

To install, follow the removal steps in the reverse order, noting the following points:

1. The sensor is installed on the core with the clip.
2. The sensor must not interfere with the evaporator core.
3. When install the new evaporator core, install the thermosensor to the evaporator core specified position with the clip in the figure 1B-37.
4. O-rings cannot be reused. Always replace new ones.
5. Be sure to apply new compressor oil to the O-rings when connecting lines.
6. Be sure to install the sensor and the insulator on the place where they were before.
7. To install a new evaporator core, add 50cc (1.7 fl.oz.) of new compressor oil to a new core.
8. Tighten the refrigerant lines to the specified torque.
   (Refer to "MAIN DATA AND SPECIFICATIONS" for TORQUE SPECIFICATIONS in this section.)
9. Apply an adhesive to parting face of lining when assembling evaporator assembly.

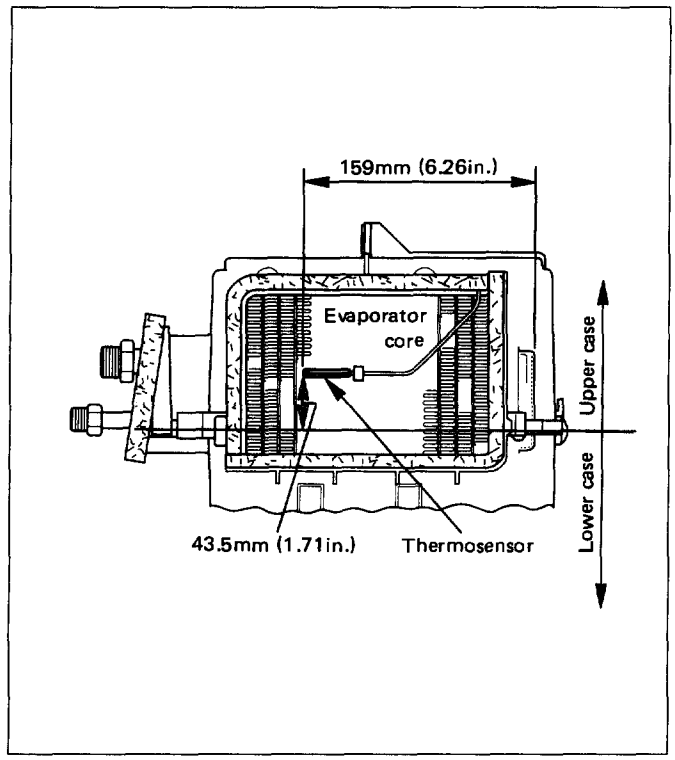

Fig. 1B-37

AIR CONDITIONING SWITCH AND ILLUMINATION BULB

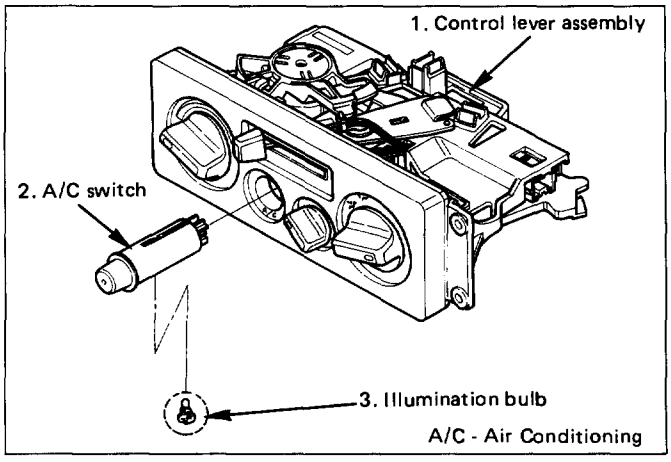

Fig. 1B-38

REMOVAL

Preparation:

Disconnect the battery ground cable

1. **Control lever assembly**
   - Refer to Section 1A "CONTROL LEVER ASSEMBLY" removal procedure.
2. **Air conditioning switch**
   - Raise up the catch portion of the switch and remove the switch while pushing it toward the outside (Fig. 1B-39).
3. **Illumination bulb**
   - Turn the illumination bulb counterclockwise to remove.

INSTALLATION

To install, follow the removal steps in the reverse order.

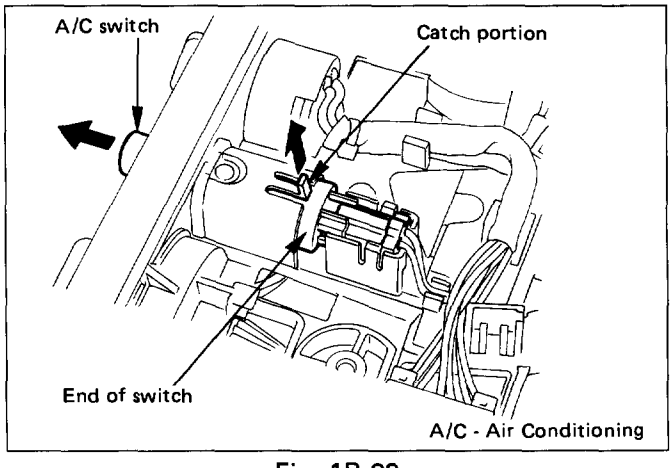

Fig. 1B-39

REFRIGERANT LINE

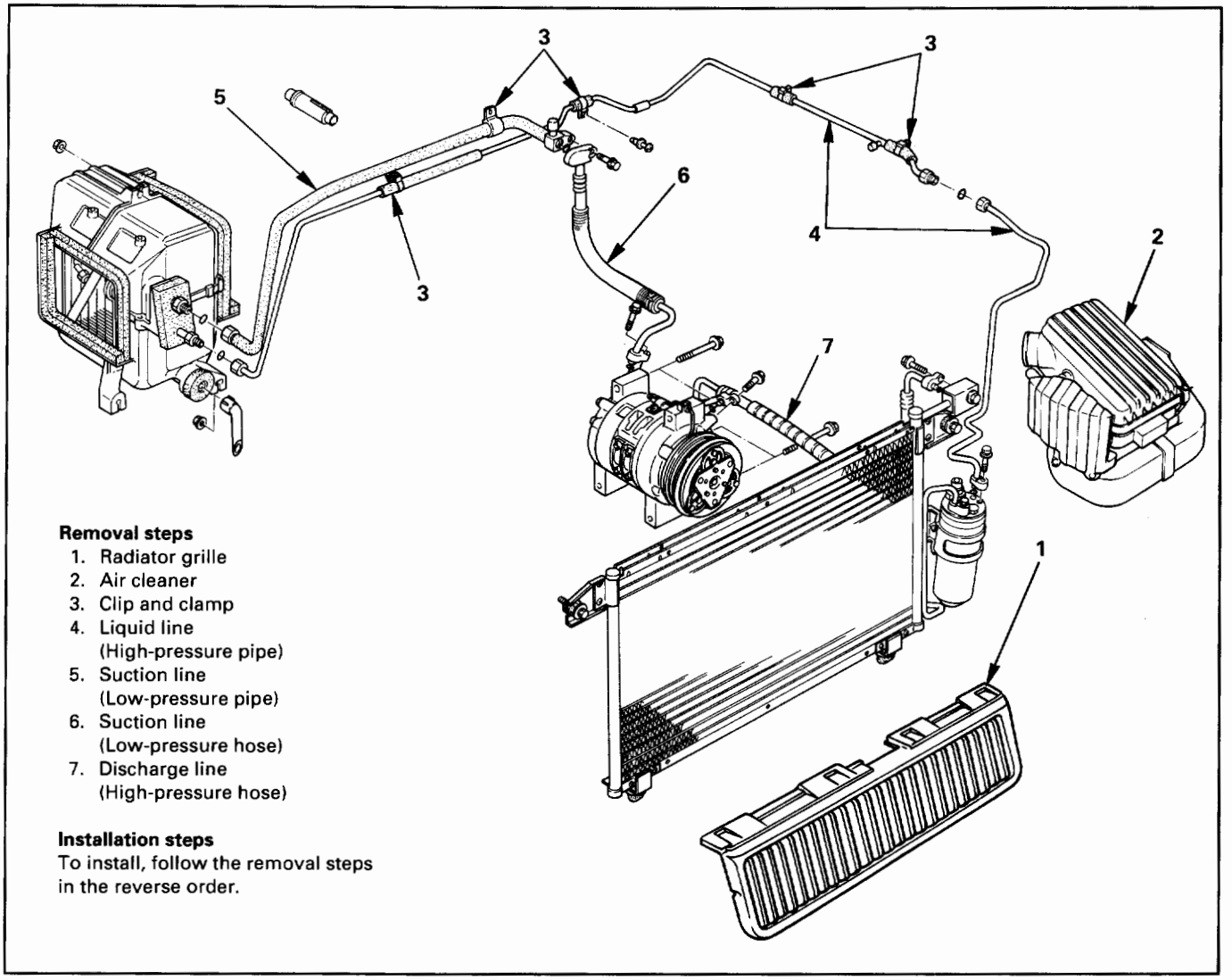

Removal steps
1. Radiator grille
2. Air cleaner
3. Clip and clamp
4. Liquid line (High-pressure pipe)
5. Suction line (Low-pressure pipe)
6. Suction line (Low-pressure hose)
7. Discharge line (High-pressure hose)

Installation steps
To install, follow the removal steps in the reverse order.

Fig. 1B-40

REMOVAL

Preparation:

Disconnect the battery ground cable

Discharge and recover refrigerant (Refer to "REFRIGERANT RECOVERY" in this section.)

1. **Radiator grille**
2. **Air cleaner**
3. **Clip and clamp**
4. **Liquid line (High-pressure pipe)**
5. **Suction line (Low-pressure pipe)**
6. **Suction line (Low-pressure hose)**
7. **Discharge line (High-pressure hose)**
   - Use a back-up wrench when disconnecting and reconnecting the refrigerant lines.
   - When removing the refrigerant line connecting part, the connecting part should immediately be plugged or capped to prevent foreign matter from being mixed into the line.

INSTALLATION

To install, follow the removal steps in the reverse order, noting the following points:

1. O-rings cannot be reused. Always replace new ones.
2. Be sure to apply compressor oil to the O-rings when connecting refrigerant lines.
3. Tighten the refrigerant line to the specified torque.
   (Refer to "MAIN DATA AND SPECIFICATION" for TORQUE SPECIFICATIONS in this section.)

MAIN DATA AND SPECIFICATIONS

GENERAL SPECIFICATIONS

HEATER UNIT		
Temperature control		Reheat air mix system
Capacity	(Kcal./hr.)	3,700
Air flow	(m^3/hr.)	280
HEATER CORE		
Type		Fin & tube type
Element dimension	mm (in.)	161 (6.3) × 163 (6.4) × 45 (1.8)
Radiating area	m^2	Approx. 2.1
EVAPORATOR ASSEMBLY		
Capacity	(Kcal./hr.)	4,200
Air flow	(m^3/hr.)	470
EVAPORATOR CORE		
Type		Al-laminate louver fin type
Element dimension	mm (in.)	235 (9.3) × 224 (8.8) × 74 (2.9)
EXPANSION VALVE		
Type		External pressure equalizer type
THERMOSTAT SWITCH		
Type	°C (F)	Electronic thermostat OFF: Below 3.5 ± 0.5 (38.3 ± 0.9) ON: Above 5.0 ± 0.5 (41.0 ± 0.9)
CONDENSER		
Type		Parallel flow
Radiation performance	(Kcal./hr.)	11,200
RECEIVER/DRIER		
Type		Assembly includes sight glass with dual pressure switch
Internal volume	cc (fl. oz.)	300 (10)
PRESSURE SWITCH		
Type		Dual pressure switch
	kPa (psi)	• Low pressure control ON: 186.3 ± 29.4 (27.0 ± 4.3) OFF: 176.5 ± 19.6 (25.6 ± 2.8) • High pressure control ON: 2059.4 ± 196.1 (341.3 ± 28.4) OFF: 2942.0 ± 196.1 (426.6 ± 28.4)
REFRIGERANT		
Type		HFC-134a
Specified amount	g (lbs.)	750 (1.65)

TORQUE SPECIFICATIONS

N·m (lb·ft)

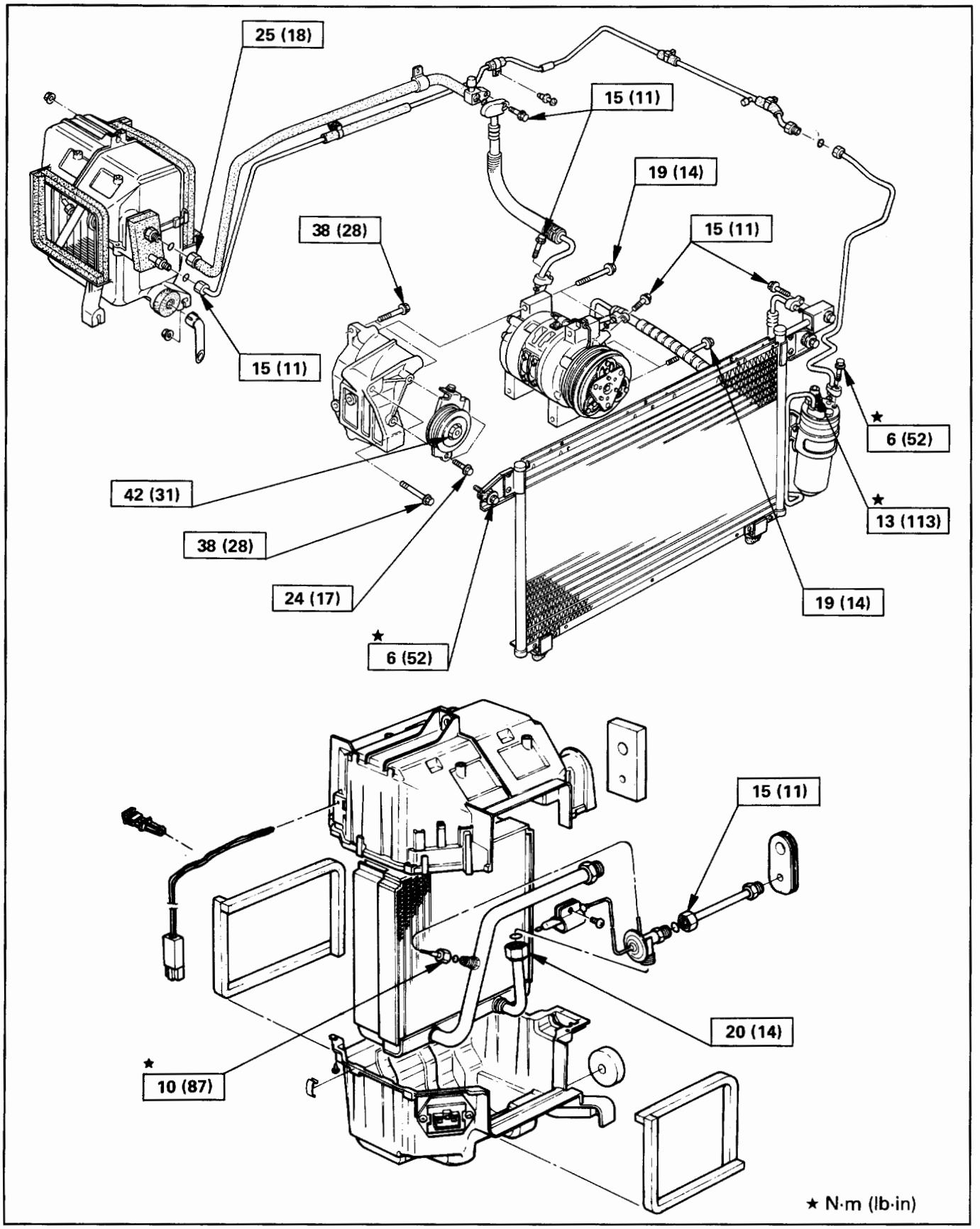

Fig. 1B-41

SECTION 1D

COMPRESSOR OVERHAUL

CONTENTS

General Description 1D-1
Diagnosis 1D-2
General Information 1D-3
Compressor Oil 1D-3
Service Procedures 1D-5
Magnetic Clutch Assembly 1D-5
Main Data and Specifications 1D-8
General Specifications 1D-8
Torque Specifications 1D-8
Special Tools 1D-9

GENERAL DESCRIPTION

When servicing the compressor, keep dirt or foreign material from getting on or into the compressor parts and system. Clean tools and a clean work area are important for proper service. The compressor connections and the outside of the compressor should be cleaned before any "On-Vehicle" repair, or before removal of the compressor. The parts must be kept clean at all times and any parts to be reassembled should be cleaned with Trichloroethane, naphtha, kerosene, or equivalent solvent, and dried with dry air. Use only lint free cloths to wipe parts.

The operations described below are based on bench overhaul with compressor removed from the vehicle, except as noted. They have been prepared in order of accessibility of the components. When the compressor is removed from the vehicle for servicing, the oil remaining in the compressor should be discarded and new compressor oil added to the compressor.

Magnetic clutch assembly repair procedures require that the system be discharged of refrigerant. (Refer to Section 1B for "REFRIGERANT RECOVERY".)

Compressor malfunction will appear in one of four ways: noise, seizure, leakage or low discharge pressure. Resonant compressor noises are not cause for alarm; however, irregular noise or rattles may indicate broken parts or excessive clearances due to wear. To check seizure, de-energize the magnetic clutch and check to see if the drive plate can be rotated. If rotation is impossible, the compressor is seized. Low discharge pressure may be due to a faulty internal seal of the compressor, or a restriction in the compressor. Low discharge pressure may also be due to an insufficient refrigerant charge or a restriction elsewhere in the system. These possibilities should be checked prior to servicing the compressor. If the compressor is inoperative, but is not seized, check to see if current is being supplied to the magnetic clutch coil terminals.

This vehicle is equipped with five-vane rotary compressor.

The compressor has vanes built into a rotor which is mounted on a shaft.

When the shaft rotates, the vanes built into the cylinder block assembly are opened by centrifugal force.

This changes the volume of the space formed by the rotor and cylinder, resulting in the intake and compression of the refrigerant gas. The discharge valve and the valve stopper, which protects the discharge valve, are built into the cylinder block assembly. There is no suction valve but a shaft seal is installed between the shaft and head; a trigger valve, which applies back pressure to the vanes, is installed in the cylinder block and a refrigerant gas temperature sensor is installed in the front head.

The specified quantity of compressor oil is contained in the compressor to lubricate the various parts using the refrigerant gas discharge pressure.

The thermo sensor is installed to the front head of the compressor to protect it by stopping its operation when the refrigerant gas is insufficient or when the temperature get abnormally high.

- OFF ..... 160 ± 5°C (320.0 ± 9.0°F)
- ON ..... 135 ± 5°C (275.0 ± 9.0°F)

The oil used in the HFC-134a system compressor differs from that used in R-12 systems.

Also, compressor oil to be used varies according to the compressor model. Be sure to avoid mixing two or more different types of oil.

If the wrong oil is used, lubrication will be poor and the compressor will seize or malfunction.

The specified amount of the compressor oil is 150cc (5.0 fl.oz.).

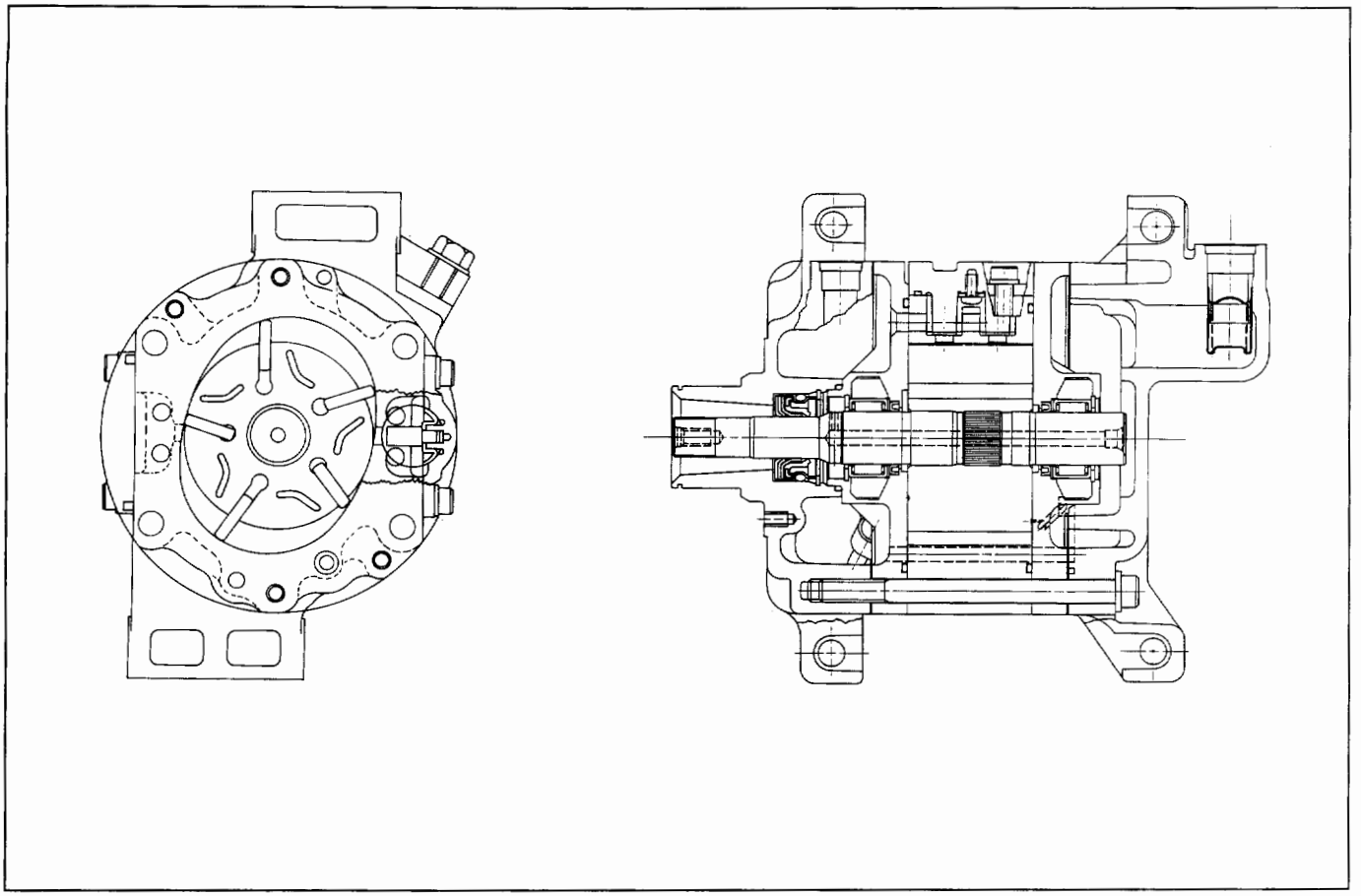

Fig. 1D-1

DIAGNOSIS

ITEM	PROBLEM	POSSIBLE CAUSES	CORRECTION
1	Noise from compressor	1. Defective rotor 2. Defective shaft	Replace compressor Replace compressor
2	Noise from magnetic clutch face	1. Defective bearing 2. Defective clutch 3. Clearance between drive plate and pulley not standard	Replace magnetic clutch Replace magnetic clutch Replace magnetic clutch or adjust the clearance
3	Insufficient cooling	1. Defective gasket 2. Defective rotor 3. Defective trigger valve	Replace compressor Replace compressor Replace compressor
4	Not rotating	1. Defective rotor 2. Defective shaft 3. Rotating parts seized due to insufficient oil	Replace compressor Replace compressor Replace compressor
5	Oil and/or gas leakage	1. Defective seal 2. Defective O-ring	Replace compressor Replace

GENERAL INFORMATION

COMPRESSOR OIL

OIL SPECIFICATION

- The HFC-134a system requires a synthetic (PAG) compressor oil whereas the R-12 system requires a mineral compressor oil. The two oils must never be mixed.
- Compressor (PAG) oil varies according to compressor model. Be sure to use oil specified for the model of compressor.
- **Always use HFC-134a Vane Rotary Type Compressor Oil**
  (AIPDN Part No. 2-90188-301-0)

HANDLING OF OIL

- The oil should be free from moisture, dust, metal powder, etc.
- Do not mix with other oil.
- The water content in the oil increases when exposed to the air. After use, seal oil from air immediately.
  (HFC-134a Vane Rotary Compressor Oil absorbs moisture very easily.)
- The compressor oil must be stored in steel containers, not in plastic containers.

COMPRESSOR OIL CHECK

The oil used to lubricate the compressor is circulating with the refrigerant.
Whenever replacing any component of the system or a large amount of gas leakage occurs, add oil to maintain the original amount of oil.

Oil Capacity.

Capacity total in system	150cc (5.0 fl.oz.)
Compressor (Service parts) charging amount	150cc (5.0 fl.oz.)

Checking and Adjusting for Used Compressor

1. Perform Oil return operation.
   (Refer to "Oil Return Operation" in this section.)
2. Discharge and recover refrigerant and remove the compressor.
3. Drain the compressor oil and measure the extracted oil with a measuring cylinder (Fig. 1D-2).

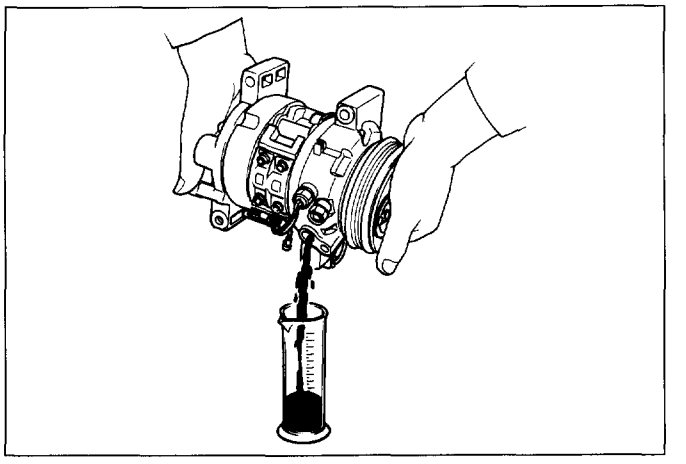

Fig. 1D-2

4. If the amount of oil drained is much less than 90cc (3.0 fl.oz.), some refrigerant may have leaked out. Conduct leak tests on connections of each system, and if necessary, repair or replace faulty parts.
5. Check the compressor oil for contamination.
   (Refer to "Contamination of Compressor Oil" in this section.)
6. Adjust oil level following the procedure below (Fig. 1D-3).

Collected Amount	Charging Amount
more than 90cc (3.0 fl.oz.)	same as collected amount
less than 90cc (3.0 fl.oz.)	90cc (3.0 fl.oz.)

7. Install the compressor, then evacuate, charge and perform oil return operation.
8. Check system operation.

When it is impossible to perform oil return operation, the compressor oil should be checked in the following order:

1. Discharge and recover refrigerant and remove the compressor.
2. Drain the compressor oil and measure the extracted oil with a measuring cylinder.
3. Check the oil for contamination.
4. If more than 90cc (3.0 fl.oz.) of oil is extracted from the compressor, supply same amount of oil to the compressor to be installed.
   If the amount of oil extracted is less than 90cc (3.0 fl.oz.), recheck the compressor oil in the following order:
5. Supply 90cc (3.0 fl.oz.) of oil to the compressor and install it onto the vehicle.

6. Perform oil return operation.
7. Remove the compressor and recheck the amount of oil.
8. Adjust the compressor oil, if necessary.

Collected Amount	Charging Amount
more than 90cc (3.0 fl.oz.)	same as collected amount
less than 90cc (3.0 fl.oz.)	90cc (3.0 fl.oz.)

Checking and Adjusting for Compressor Replacement

150cc (5.0 fl.oz.) of oil is charged in compressor (service parts). So it is necessary to drain the proper amount of oil from the new compressor.

1. Perform oil return operation.
2. Discharge and recover refrigerant and remove the compressor.
3. Drain the compressor oil and measure the extracted oil.
4. Check the compressor oil for contamination.
5. Adjust oil level as required.

Amount of oil drained from used compressor	Draining amount of oil from new compressor
less than 90cc (3.0 fl.oz.)	Same as drained amount
more than 90cc (3.0 fl.oz.)	90cc (3.0 fl.oz.)

6. Evacuate, charge and perform oil return operation.
7. Check system operation.

CONTAMINATION OF COMPRESSOR OIL

Unlike engine oil, no cleaning agent is added to the compressor oil. Even if the compressor runs for a long period of time (approximately 1 season), the oil never becomes contaminated as long as there is nothing wrong with the compressor or its method of use.

Inspect the extracted oil for any of the following conditions:

- The capacity of the oil has increased.
- The oil has changed color to red.
- Foreign substances, metal powder, etc., are present in the oil.

If any of these conditions exists, compressor oil is contaminated. Whenever contaminated compressor oil is discovered, the receiver/dryer must be replaced.

OIL RETURN OPERATION

There is close affinity between the oil and the refrigerant. During normal operation, part of the oil recirculates with the refrigerant in the system.

When checking the amount of oil in the system, or replacing any component of the system, the compressor must be run in advance for oil return operation. The procedure is as follows:

1. Open the all doors and engine hood.
2. Start the engine and air conditioning switch is "ON" and Set the fan control knob at its highest position.
3. Run the compressor for more than 20 minutes between 800 and 1,000 rpm in order to operate the system.
4. Stop the engine.

REPLACEMENT OF COMPONENT PARTS

When replacing system component parts, supply the following amount of oil to the component parts to be installed.

Component parts to be installed	Amount of oil
Evaporator	50cc (1.7 fl.oz.)
Condenser	30cc (1.0 fl.oz.)
Receiver/dryer	30cc (1.0 fl.oz.)
Refrigerant line (one piece)	10cc (0.3 fl.oz.)

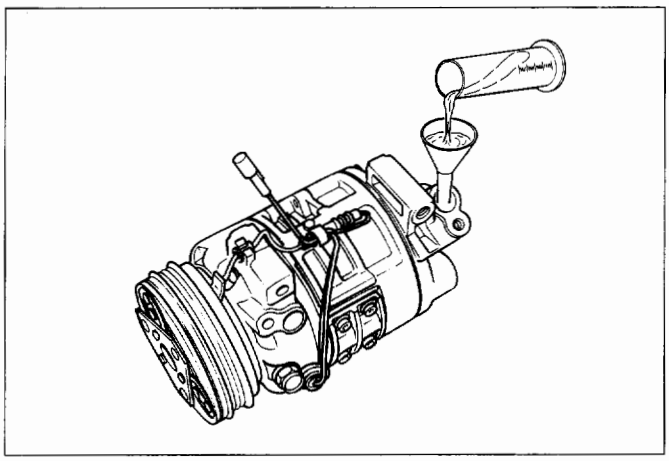

Fig. 1D-3

SERVICE PROCEDURE

MAGNETIC CLUTCH ASSEMBLY

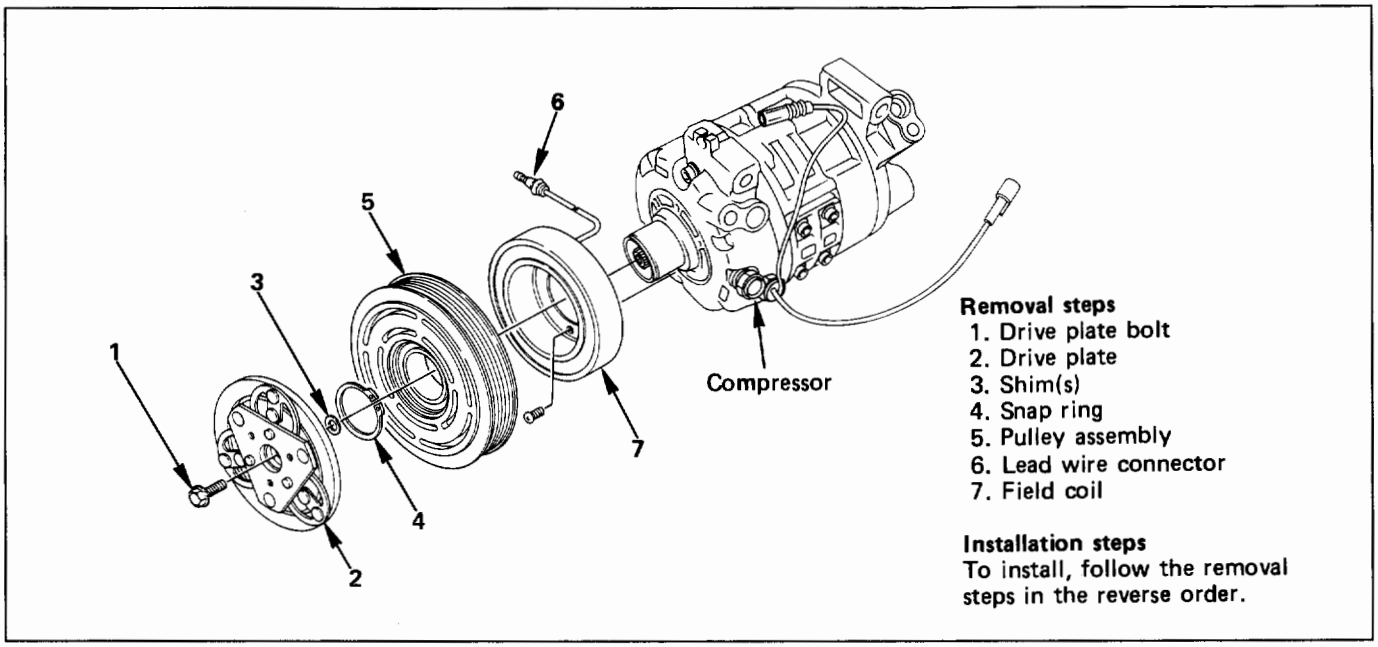

Fig. 1D-4

REMOVAL

1. **Drive plate bolt**
   - Using drive plate holder (J-33939) to prevent the drive plate from rotating, then remove the drive plate bolt (Fig. 1D-5).
2. **Drive plate**
   - Using drive plate puller (J-33944-A) and forcing screw (J-33944-4) to remove the drive plate (Fig. 1D-6).
3. **Shim(s)**
4. **Snap ring**
   - Using snap ring pliers to remove the snap ring (Fig 1D-7).
5. **Pulley assembly**
   - Using pulley puller pilot (J-38424), pulley puller (J-8433) and pulley puller leg (J-24092) to remove the pulley assembly (Fig. 1D-8).
6. **Lead wire connector**
   - Loosen screw and disconnect the coil lead wire connector (Fig. 1D-9).
7. **Field coil**
   - Loosen three screws and remove the field coil (Fig. 1D-10).

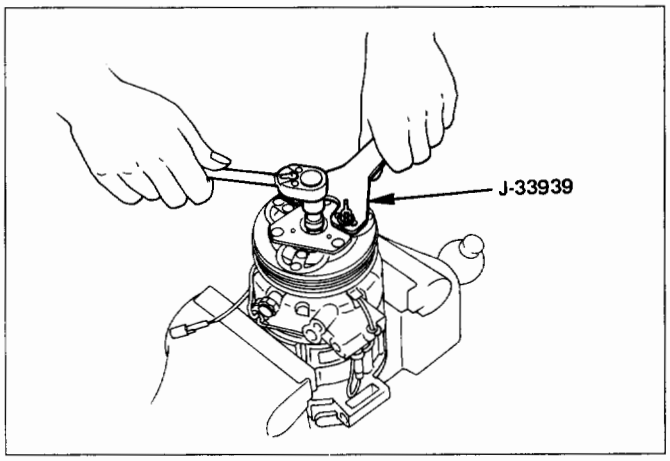

Fig. 1D-5

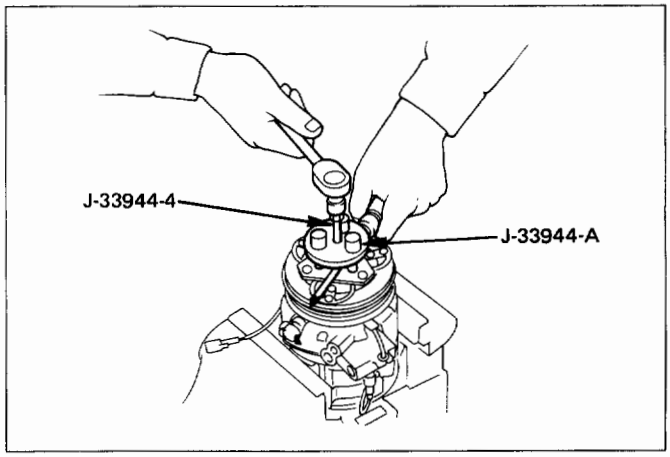

Fig. 1D-6

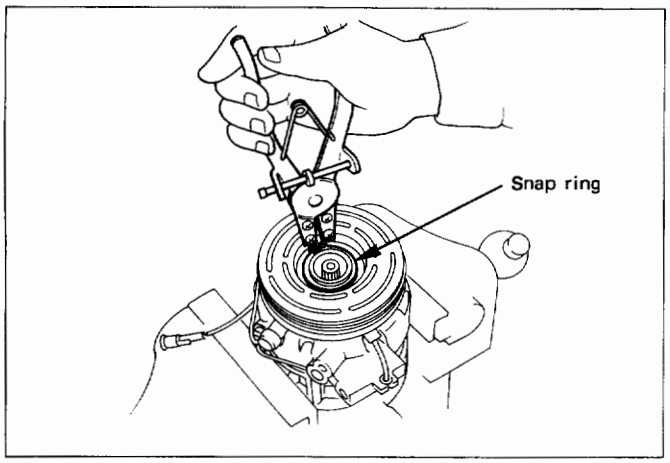

Fig. 1D-7

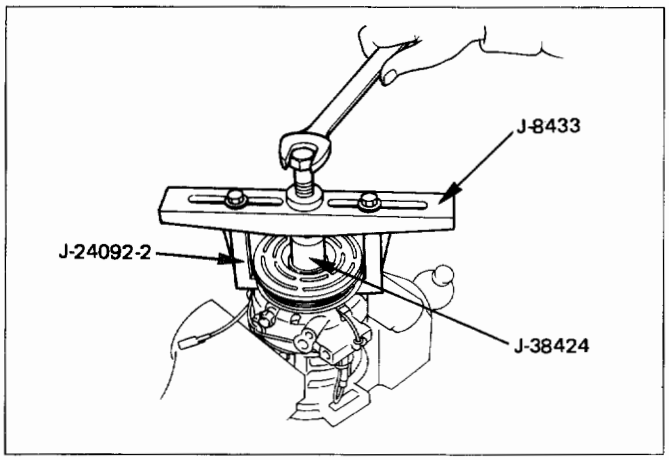

Fig. 1D-8

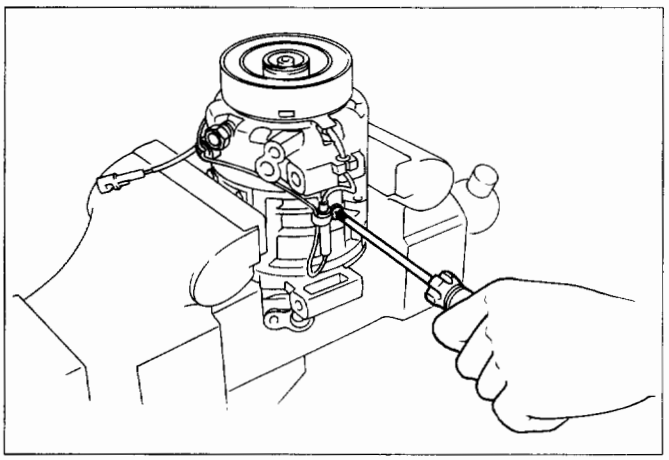

Fig. 1D-9

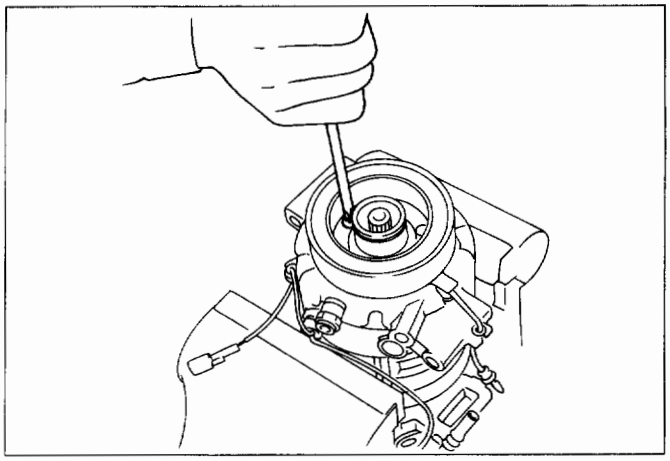

Fig. 1D-10

INSPECTION AND REPAIR

Drive Plate

If the frictional surface shows signs of damage due to excessive heat, the drive plate and pulley should be replaced.

Pulley Assembly

Check the appearance of the pulley assembly. If the frictional surface of the pulley shows signs of excessive grooving due to slippage, both the pulley and drive plate should be replaced. The frictional surfaces of the pulley assembly should be cleaned with a suitable solvent before reinstallation.

Coil

Check coil for loose connector or cracked insulation.

INSTALLATION

7. Field coil

- Align the located portion of the field coil and compressor (Fig. 1D-11).
- Tighten the mounting screw to the specified torque.

Torque N·m (lb·in)	5 (44)

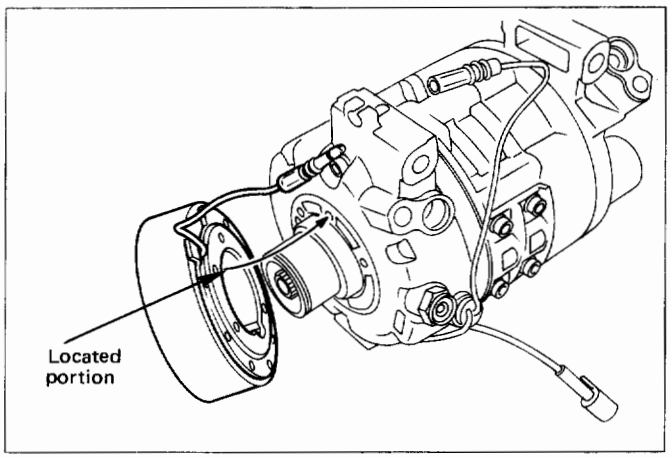

Fig. 1D-11

6. Lead wire connector

- Connect the lead wire connector with the rubber hold and tighten the screw.

5. Pulley assembly

- Using pulley installer (J-33940) and drive handle (J-8092) to install the pulley assembly.

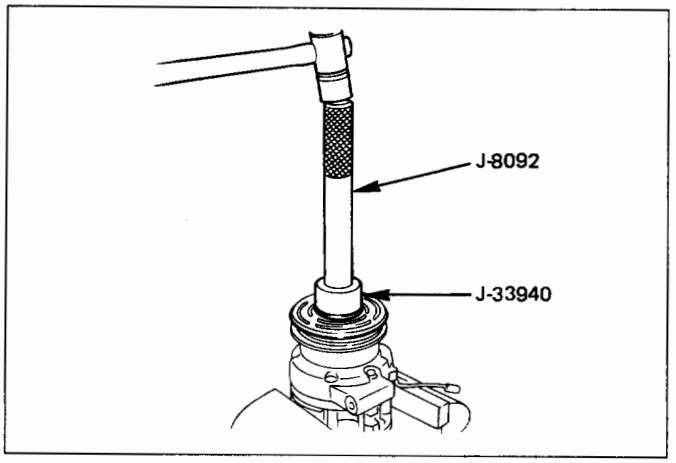

Fig. 1D-12

4. Snap ring

3. Shim(s)

2. Drive plate

- Install the drive plate to the compressor drive shaft together with the original shim(s). Press the drive plate by hand (Fig. 1D-13).

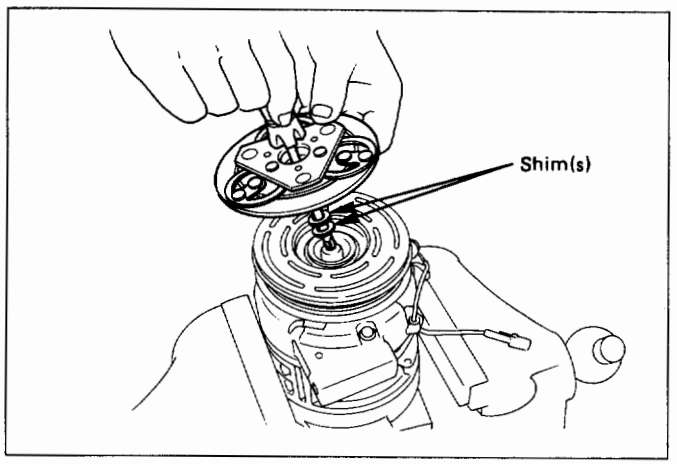

Fig. 1D-13

1. Drive plate bolt

- Using drive plate holder (J-33939) to prevent the drive plate from rotating (Fig. 1D-14).

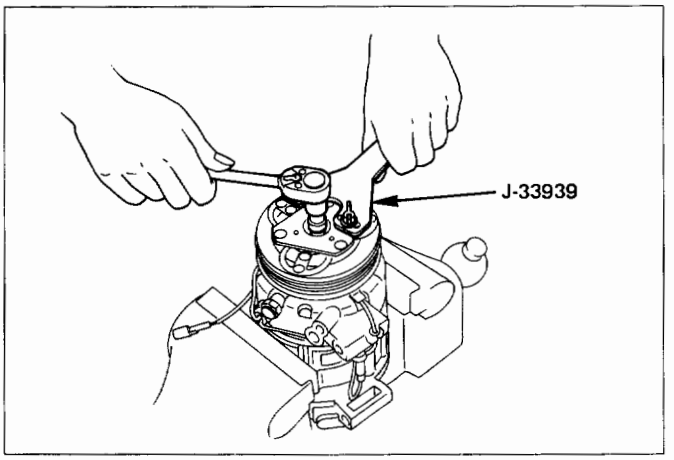

Fig. 1D-14

- Tighten the drive plate bolt to the specified torque.

Torque	N·m (lb·in)	13 (113)

- After tightening the drive plate bolt, check to be sure the pulley rotates smoothly.

- Check to be sure that the clutch clearance is between 0.3-0.6mm (0.01-0.02 in.) (Fig. 1D-15).
- If necessary, install adjusting shim(s).

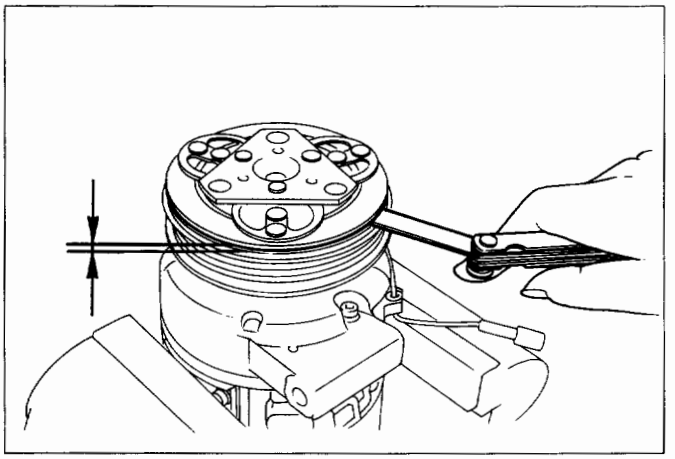

Fig. 1D-15

- Adjusting shims are available in the following thickness.

Thickness	0.1mm (0.0039 in.)
	0.3mm (0.0118 in.)
	0.5mm (0.0197 in.)

MAIN DATA AND SPECIFICATIONS

GENERAL SPECIFICATIONS

COMPRESSOR		
Model		DKV-14D
Type		Vane rotary type
Number of vanes		5
Rotor diameter	mm (in)	64 (2.52)
Stroke	mm (in)	8.75 (0.34)
Displacement	cc/Rev. (cu. in/Rev)	140 (8.54)
Maximum speed	(rpm)	7,000 (up to 8,400)
Direction of rotation		Clockwise (Front-side view)
Lubrication system		Pressure differential type
Lubricant	cc (fl.oz)	HFC-134a Vane Rotary Compressor Oil (AIPDN Part No. 2-90188-301-0) 150 (5.0)
Refrigerant	g (lb)	HFC-134a, 750 (1.65)
Shaft seal		Lip type
Weight	kg (lb)	3.6 (7.94)
MAGNETIC CLUTCH		
Type		Electromagnetic single-plate dry clutch
Rated voltage		12 Volts D.C.
Current consumption	(A)	3.7
Starting torque	N·m (lb·ft)	49 (36)
Direction of rotation		Clockwise (Front-side view)
Weight	kg (lb)	2.2 (4.9)

TORQUE SPECIFICATIONS

N·m (lb·in)

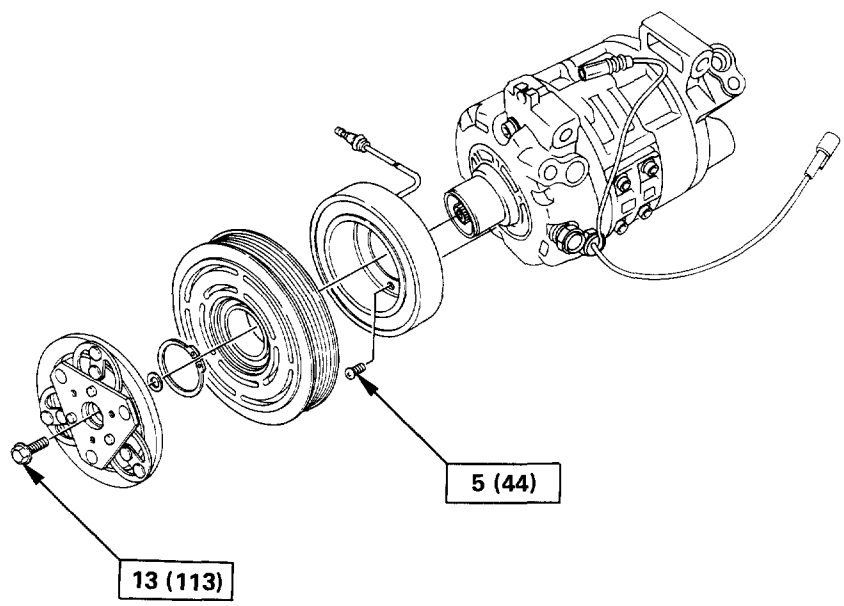

Fig. 1D-16

SPECIAL TOOLS

ILLUSTRATION	TOOL NO. TOOL NAME
	J-33939 Drive plate holder
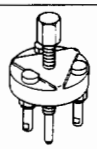	**J-33944-A** Drive plate puller
	J-33944-4 Forcing screw
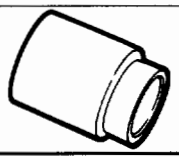	**J-38424** Pulley puller pilot

ILLUSTRATION	TOOL NO. TOOL NAME
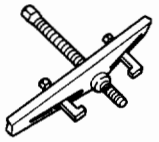	**J-8433** Pulley puller
	J-24092-2 Pulley puller leg
	J-33940 Pulley installer
	J-8092 Drive handle

MEMO

FRAME, BUMPERS AND SHEET METAL

CONTENTS

Frame ..... **Section 2A**
Bumpers ..... **Section 2B**
Sheet Metal ..... **Section 2C**

SECTION 2A

FRAME

NOTE:
Fasteners are important attaching parts in that they could affect the performance of vital components and systems, and/or could result in major repair expense. They must be replaced with one of the same part number or with an equivalent part if replacement becomes necessary. Do not use a replacement part of lesser or substitute design. Torque values must be used as specified during reassembly to assure proper retention of these parts. Refer to Torque Value Chart in the general information of Section "0A".

CONTENTS

General Description **2A–1**
Frame Dimensions **2A–2**

GENERAL DESCRIPTION

Proper frame alignment is important to assure normal vehicle life and performance of many other parts of the vehicle.

If the vehicle has been involved in a fire, collision or has been overloaded, it is necessary to check the frame alignment.

FRAME DIMENSIONS (L·W·B)

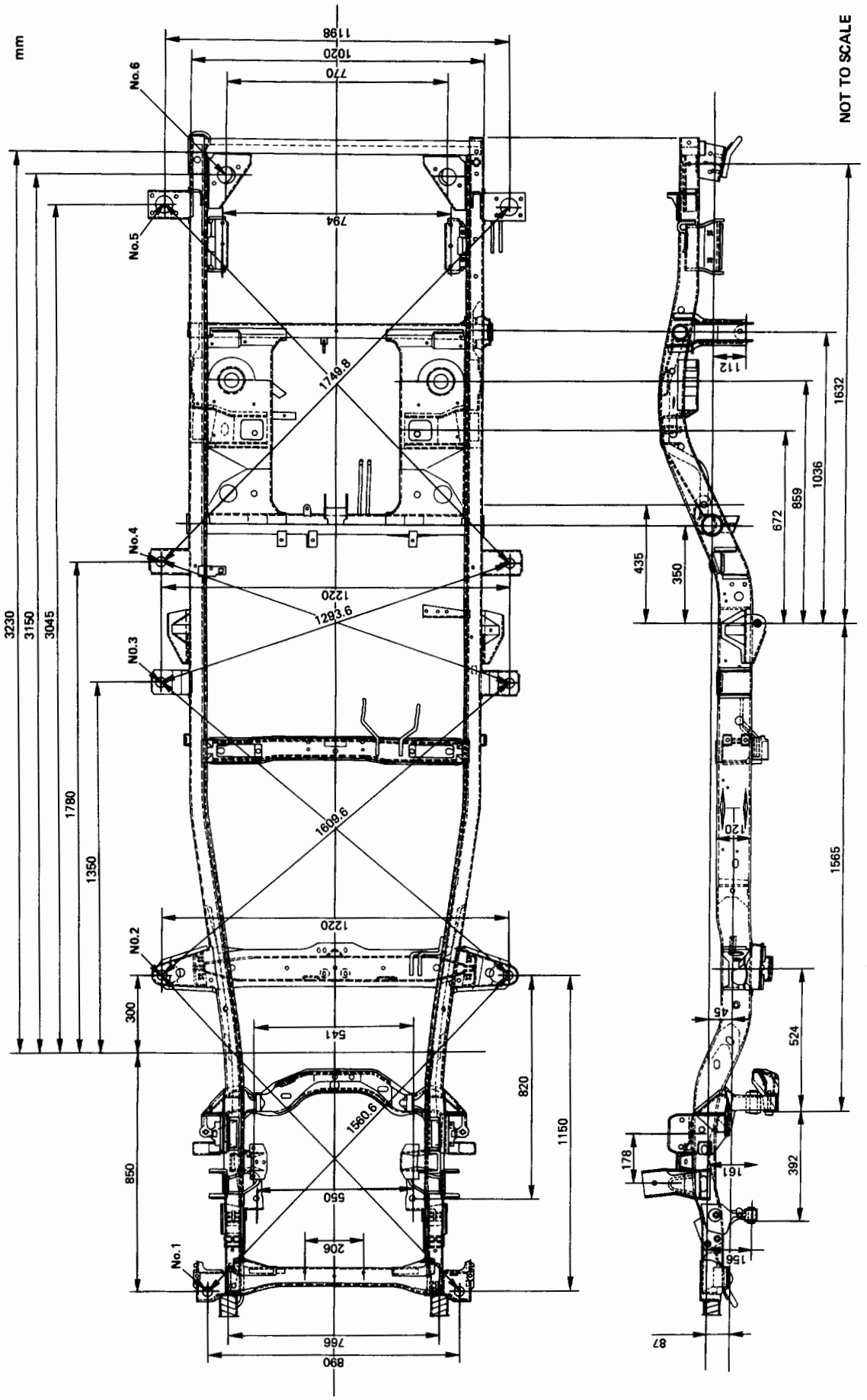

FRAME DIMENSIONS (S·W·B)

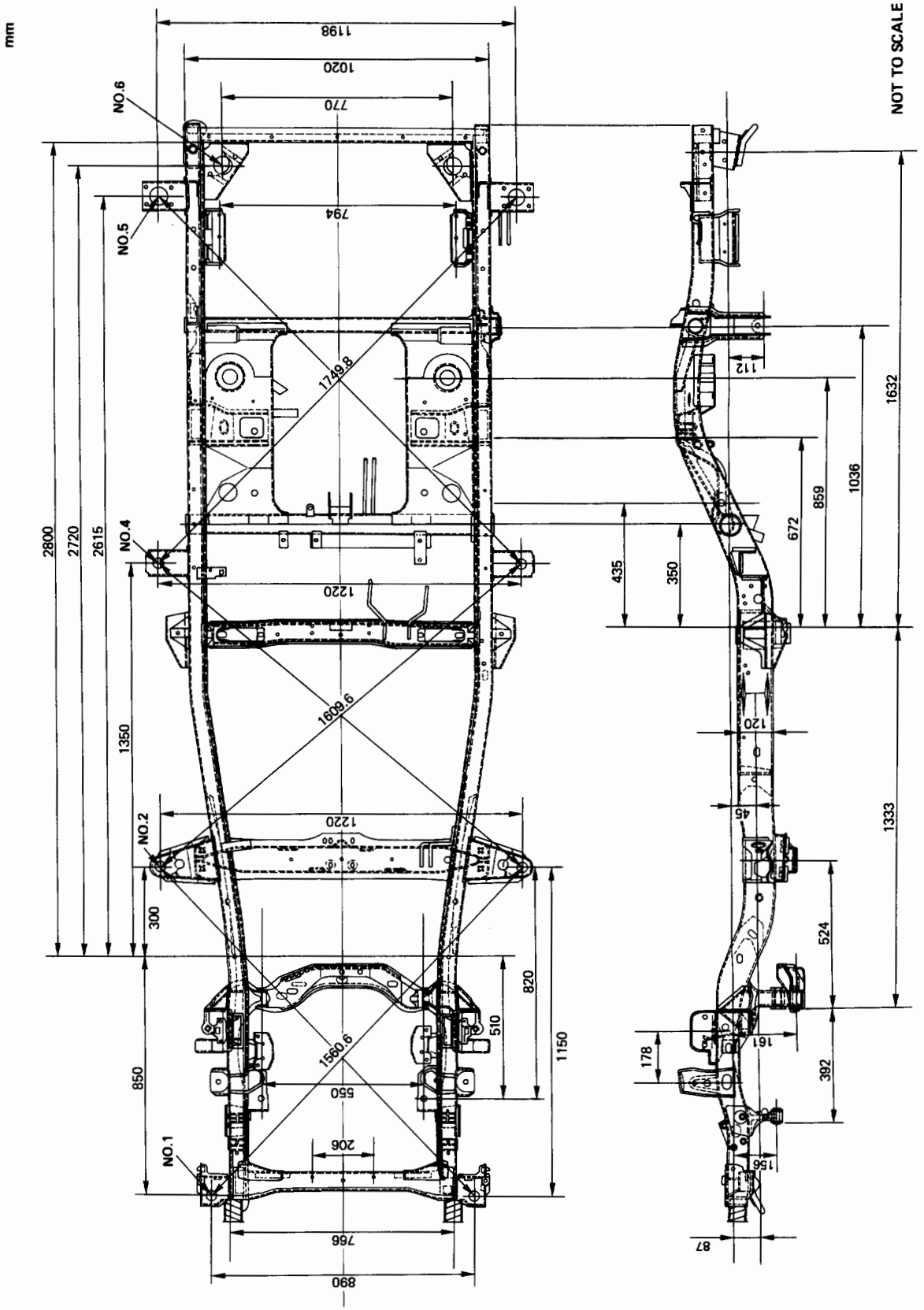

MEMO

SECTION 2B

BUMPERS

NOTE:
Fasteners are important attaching parts in that they could affect the performance of vital components and systems, and/or could result in major repair expense. They must be replaced with one of the same part number or with an equivalent part if replacement becomes necessary. Do not use a replacement part of lesser or substitute design. Torque values must be used as specified during reassembly to assure proper retention of these parts. Refer to Torque Value Chart in the general information of Section "0A".

CONTENTS

General Description 2B-1
On-Vehicle Service 2B-2
Front Bumper 2B-2
Rear Bumper 2B-4

GENERAL DESCRIPTION

This section describes how to remove and install front and rear bumpers. Each bumper is installed with two fixing bolts used on either side to fasten backbar to the frame, a slider is used to fasten the bumper fascia tothe fender panel. The bumpers can be removed by taking them out forward or backward after removing the two fixing bolts on either side.

ON-VEHICLE SERVICE

FRONT BUMPER

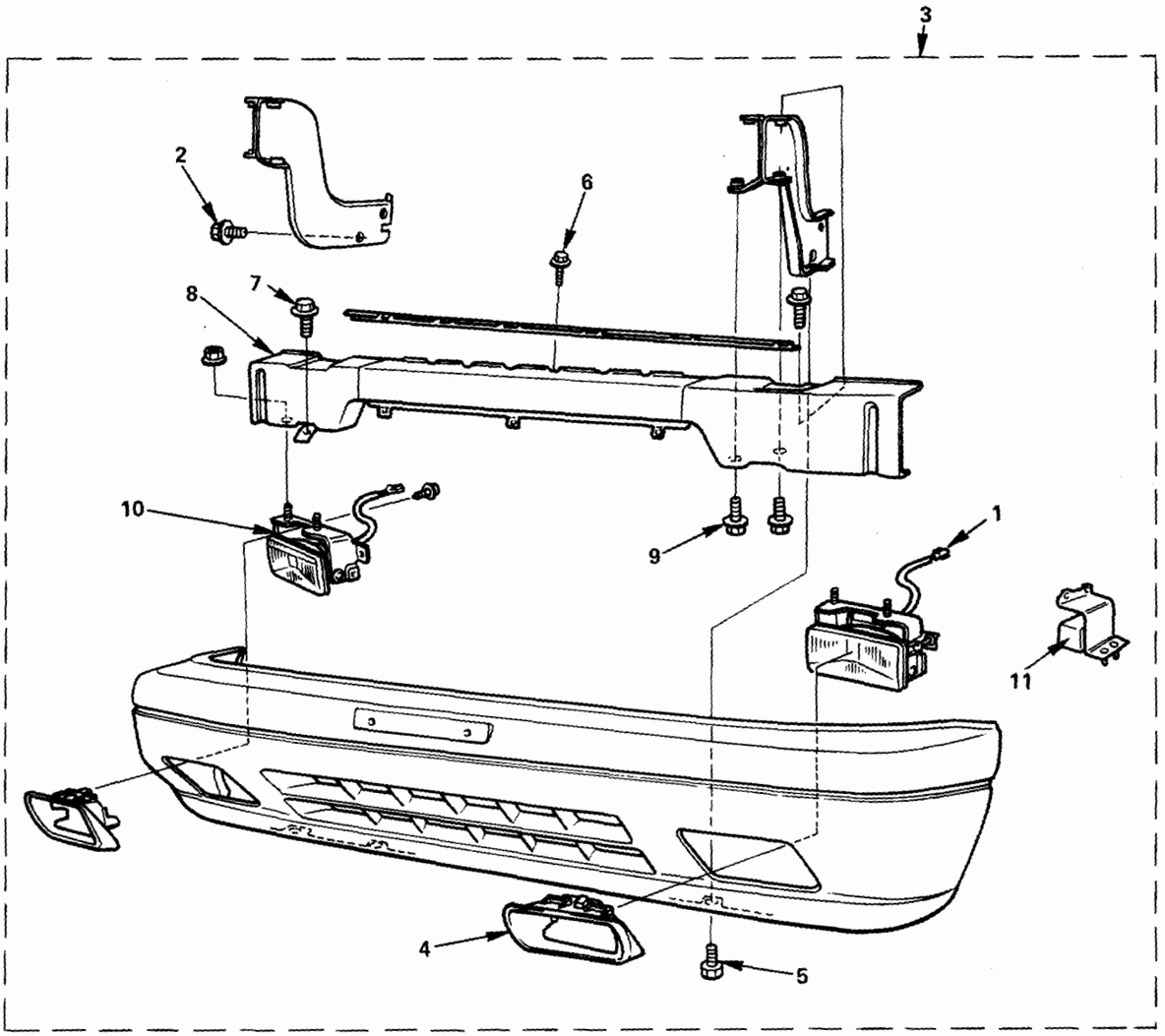

Removal steps
1. Front fog light connector
2. Front bumper fixing bolts
3. Front bumper assembly
4. Front fog light garnish
5. Bumper fascia lower bolts
6. Front bumper retainer
7. Reinforce lower bolt
8. Reinforce assembly
9. Back bar fixing bolt
10. Front fog light assembly
11. Front bumper slider

Installation steps
To install, follow the removal steps in the reverse order.

Fig. 2B-1

REMOVAL (Fig. 2B-1)

1. **Front fog light connector**
2. **Front bumper assembly fixing bolt (Fig. 2B-2)**
   - Remove the two bolts from both sides of the front bumper.

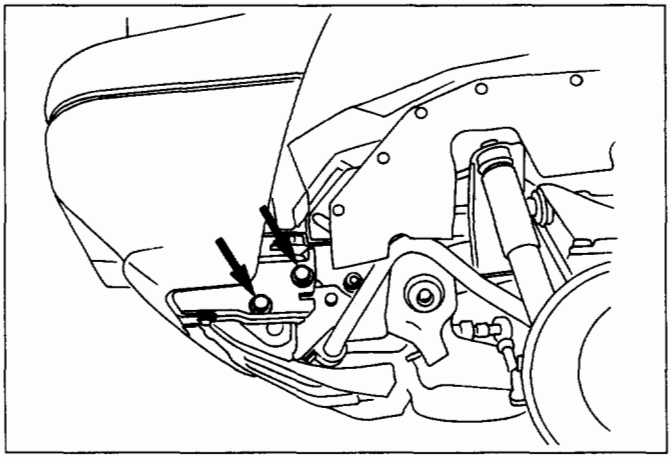

Fig. 2B-2

3. **Front bumper assembly**
4. **Front fog light garnish**
5. **Bumper fascia lower bolts**
6. **Front bumper retainer**
7. **Reinforce lower bolts**
   - Loosen the five bolts and release claws.
8. **Reinforce assembly**
9. **Backbar fixing bolts**
   - Remove the four bolts at each backbar.
10. **Front fog light assembly**
11. **Front bumper slider (Fig. 2B-3)**
    - Remove two screws and two nuts,and release the claw from the washer.

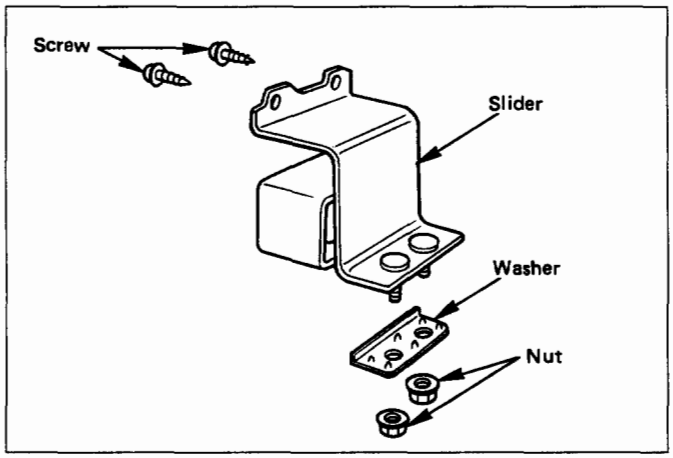

Fig. 2B-3

INSTALLATION

To install, follow the removal steps in reverse order noting the following points:

1. Tighten the front bumper assembly fixing bolts to the specified torque.

Tightening torque	N·m(lb·ft)	127 (94)

FRONT BUMPER SLIDER BACKET

REMOVAL (Fig. 2B-4)

Preparation: Remove the Front bumper.
Refer to "Front bumper" removal in this section.

1. Remove three nuts and draw out the slider bracket.

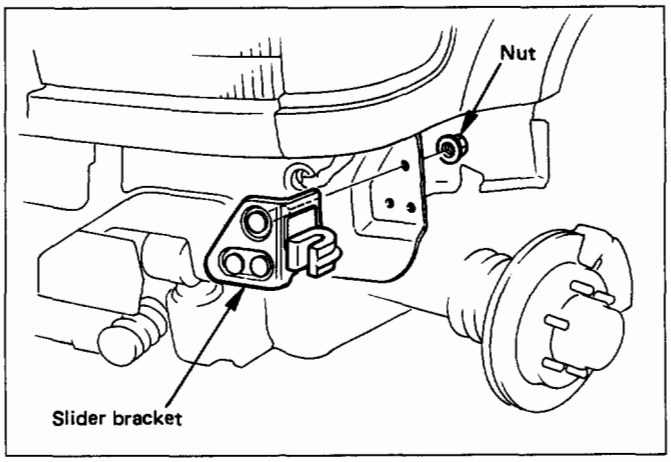

Fig. 2B-4

INSTALLATION

To install, follow the removal steps in reverse order.

REAR BUMPER

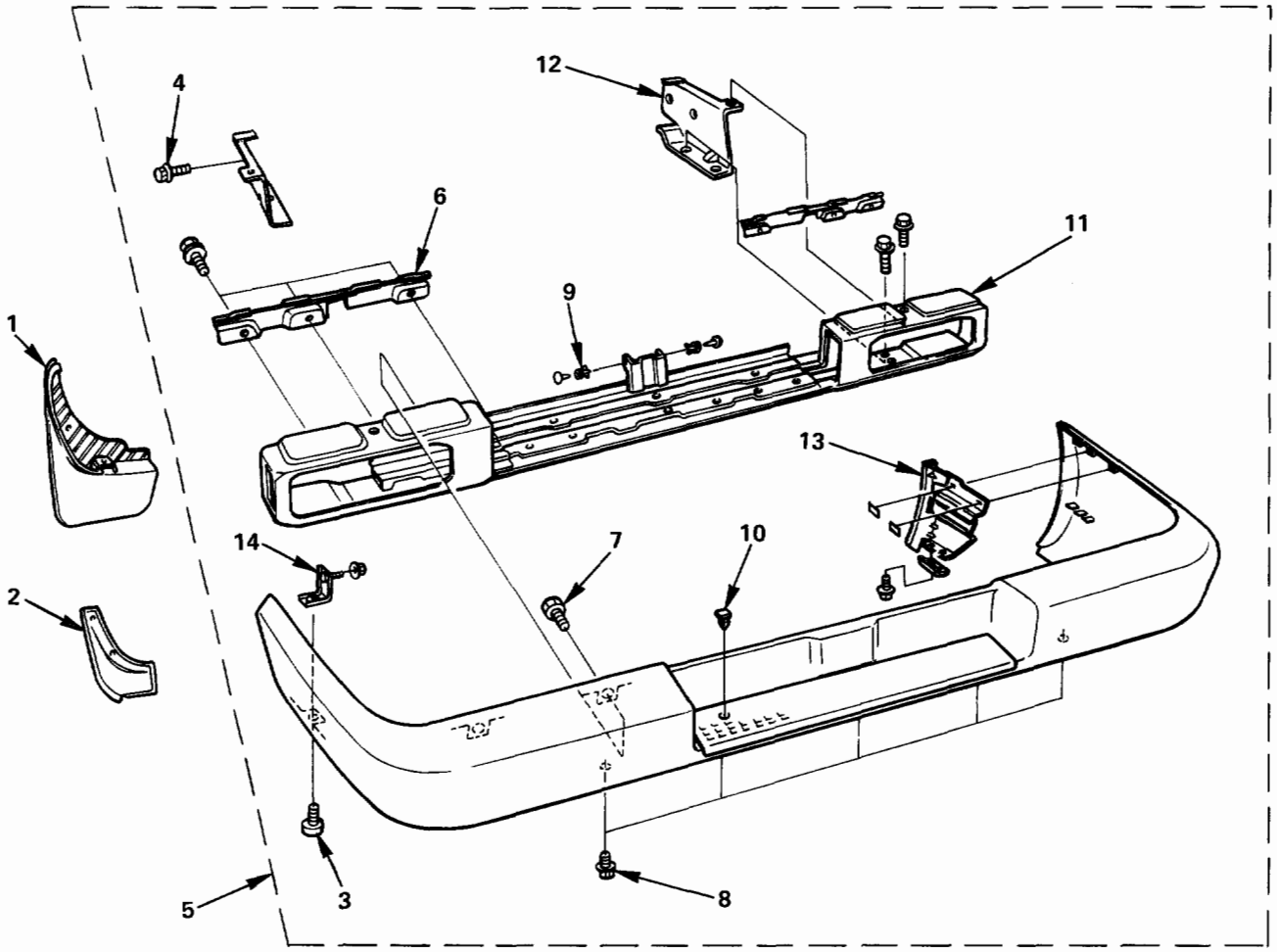

Removal steps

1. Mud flaps
2. Rear bumper side covers
3. Rear bumper fascia bracket screws
4. Rear bumper assembly fixing bolts
5. Rear bumper assembly
6. Rear bumper retainers
7. Reinforce upper bolts
8. Reinforce lower bolts
9. Clips
10. Rear step clips
11. Reinforce assembly
12. Back bars
13. Rear bumper slider brackets
14. Rear bumper fascia brackets

Installation steps

To install, follow the removal steps in the reverse order.

Fig. 2B-5

REMOVAL (Fig. 2B-5)

1. **Mud flaps**
   - Remove three screws.
2. **Bumper side cover**
3. **Bumper fascia bracket screw**
4. **Rear bumper assembly fixing bolts (Fig. 2B-6)**
   - Remove two bolts from each side.

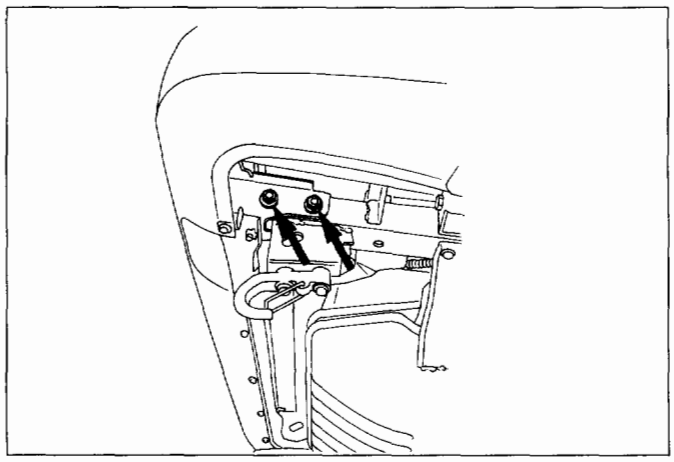

Fig. 2B-6

5. **Rear bumper assembly**
6. **Rear bumper retainers**
7. **Reinforce upper bolts**
   - Remove the rear bumper retainer from each side, and then remove two bolts.
8. **Reinforce lower screws**
9. **Clips**
10. **Rear step clips**
11. **Reinforce assembly**
    - Pull out both ends of the bumper fascia and take out the reinforce assembly.
12. **Backbars**
    - Remove the three bolts from each backbar.
13. **Rear bumper slider brackets (Fig. 2B-7)**
    - Remove the two clips and two screws, and then remove claw caught in the washer.

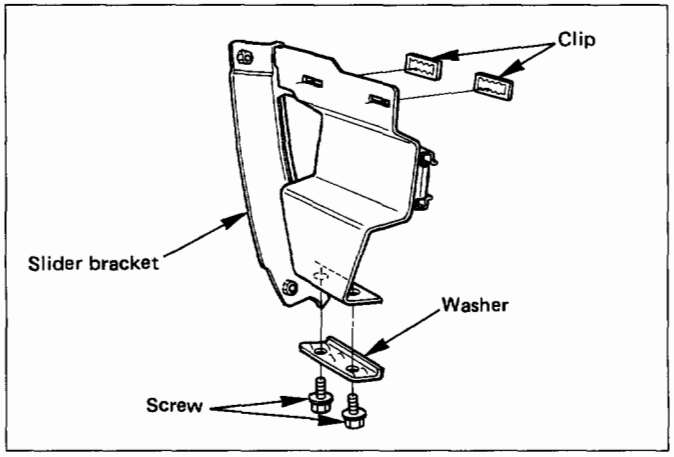

Fig. 2B-7

14. **Bumper fascia brackets**
    - Remove the fixing nut on the back side of the fender panel.

INSTALLATION

To install, follow the removal steps in reverse order noting the following points:

1. Tighten the rear bumper fixing bolts to the specified torque.

Tightening torque	N·m(lb·ft)	127 (94)

2. Apply chassis grease to the slider and slider bracket moving surface.

REAR BUMPER SLIDER

REMOVAL (Fig. 2B-8)

Preparation: Remove the Rear bumper.
Refer to "Rear bumper" removal in this section.

1. Remove the three bolts.

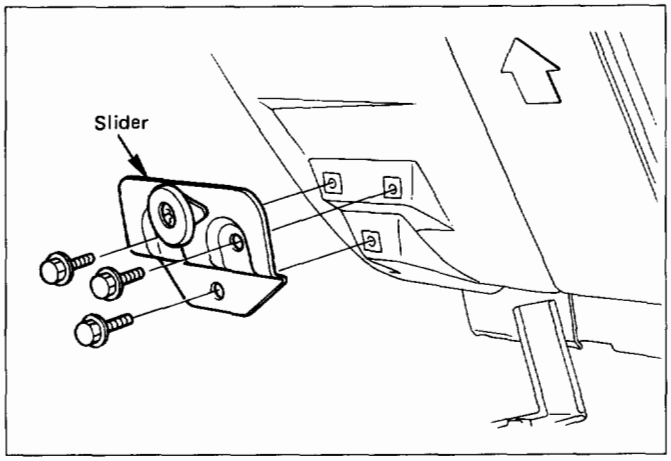

Fig. 2B-8

INSTALLATION

To install, follow the removal steps in reverse order noting the following points:

1. Apply chassis grease to the slider and slider bracket moving surface.

MEMO

SECTION 2C

SHEET METAL

NOTE:
Fasteners are important attaching parts in that they could affect the performance of vital components and systems, and/or could result in major repair expense. They must be replaced with one of the same part number or with an equivalent part if replacement becomes necessary. Do not use a replacement part of lesser quality or substitute design. Torque values must be used as specified during reassembly to assure proper retention of these parts. Refer to Torque Value Chart in the general information of Section "0A".

CONTENTS

General Description ..... 2C—1
On-Vehicle Service ..... 2C—2
Cowl Cover ..... 2C—2
Engine Hood ..... 2C—3
Engine Hood Hinge ..... 2C—4
Engine Hood Lock ..... 2C—5
Radiator Grill and Front end Lower Panel ..... 2C—6
Front Fender Panel ..... 2C—7
Body Mounting ..... 2C—9

GENERAL DESCRIPTION

This section includes items of front end sheet metal that are attached by bolts, screws or clips and related accessory components.
Anti-corrosion materials have been applied to the interior surfaces of some metal panels to provide rust resistance. When servicing these panels, areas on which this material has been disturbed should be properly recoated with service-type anti-corrosion material.

ON-VEHICLE SERVICE

COWL COVER

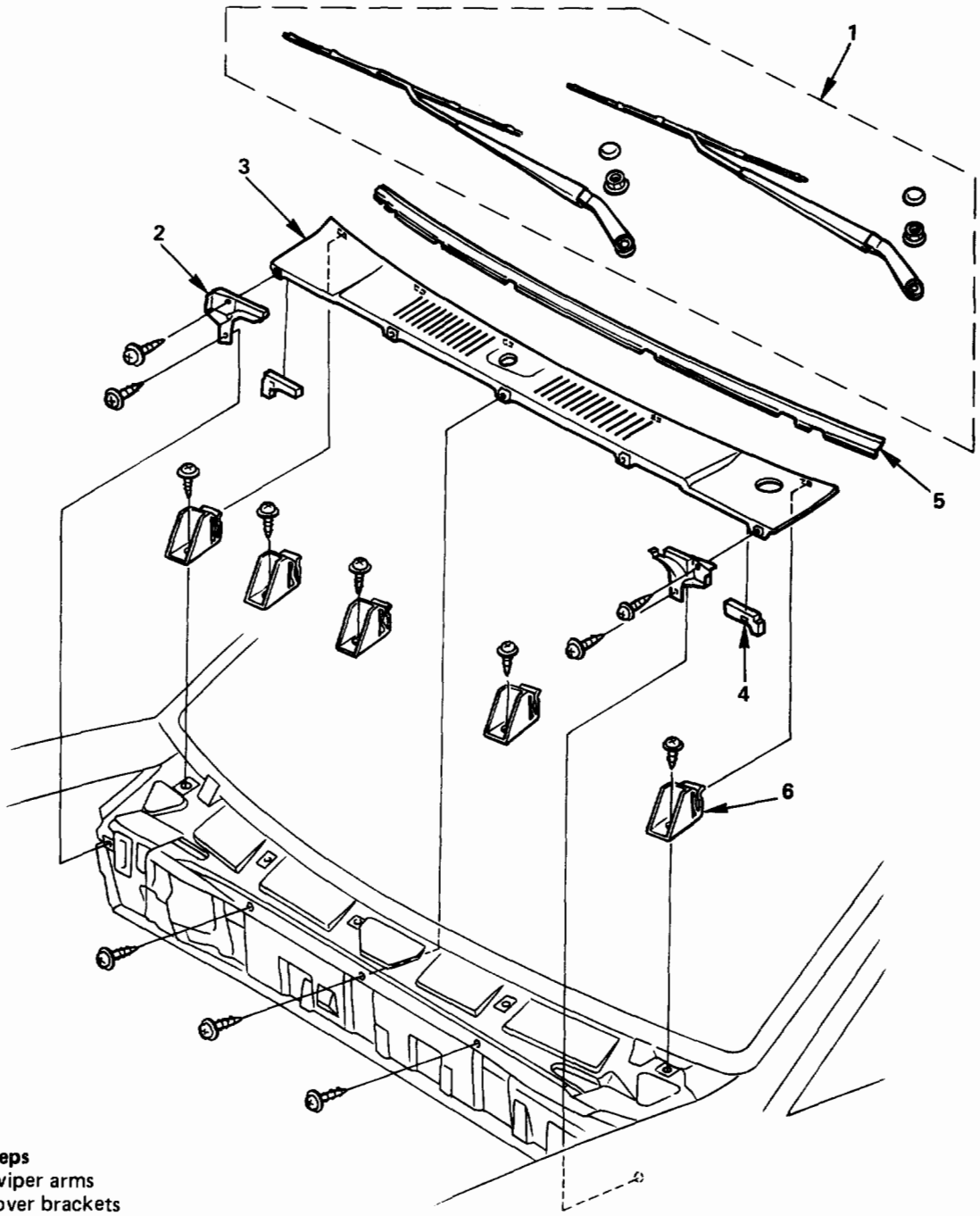

Removal steps
1. Front wiper arms
2. Cowl cover brackets
3. Cowl cover
4. Cowl cover seals
5. Front window lower molding
6. Cowl cover stoppers

Installation steps
To install, follow the removal steps in the reverse order.

Fig. 2C-1

REMOVAL (Fig. 2C-1)

Preparation:
- Open the hood.
- Support the hood.

1. **Front wiper arms**
   - Refer to "Front wiper removal" in section 8.
2. **Cowl cover brackets**
   - Disconnect two screws each side.
3. **Cowl cover**
   - Disconnect three screws.
4. **Cowl cover seals**
5. **Front window lower molding**
6. **Cowl cover stoppers**

INSTALLATION

To install, follow the removal steps in reverse order.

ENGINE HOOD

REMOVAL

Preparation:
- Open the hood.
- Support the hood.

1. **Windowshield washer nozzle tube (Fig. 2C-2)**

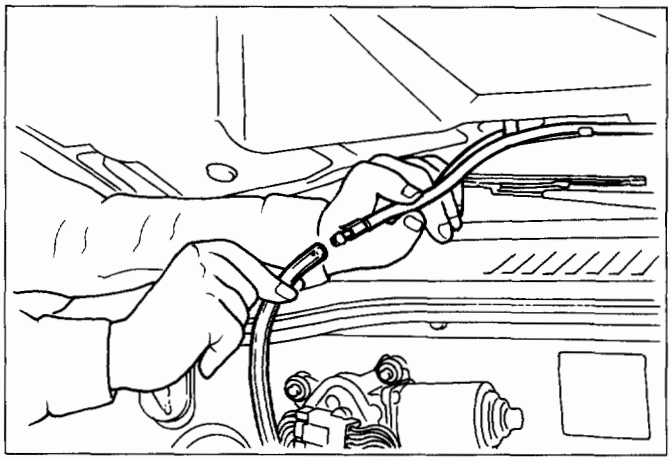

Fig. 2C-2

2. **Hood hinge bolts (Fig. 2C-2)**
   - Before removing the hinges from the Engine hood, scribe a mark showing location of the hinges to facilitate installation in the original position.
3. **Engine hood (Fig. 2C-3)**

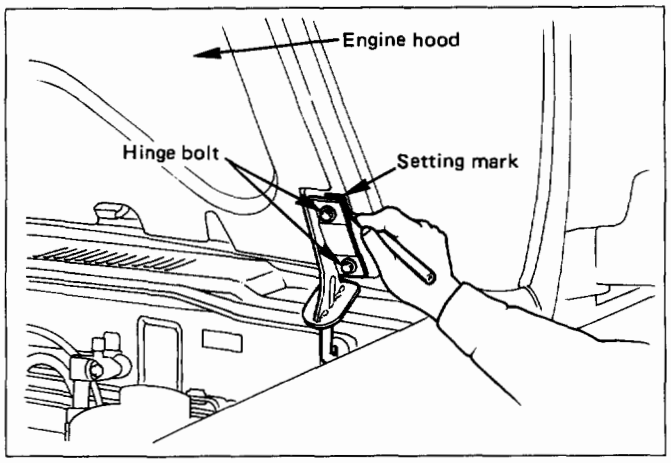

Fig. 2C-3

INSTALLATION

To install, follow the removal steps in reverse order noting the following points:

1. Tighten the engine hood fixing bolts to the specified torque.

Tighten torque	N·m(lb·in)	13 (113)

2. Adjust the engine hood mounting gap with reference to "Body dimension" in section 10.
3. Check and see if the engine hood lock operates normally.

ENGINE HOOD HINGE

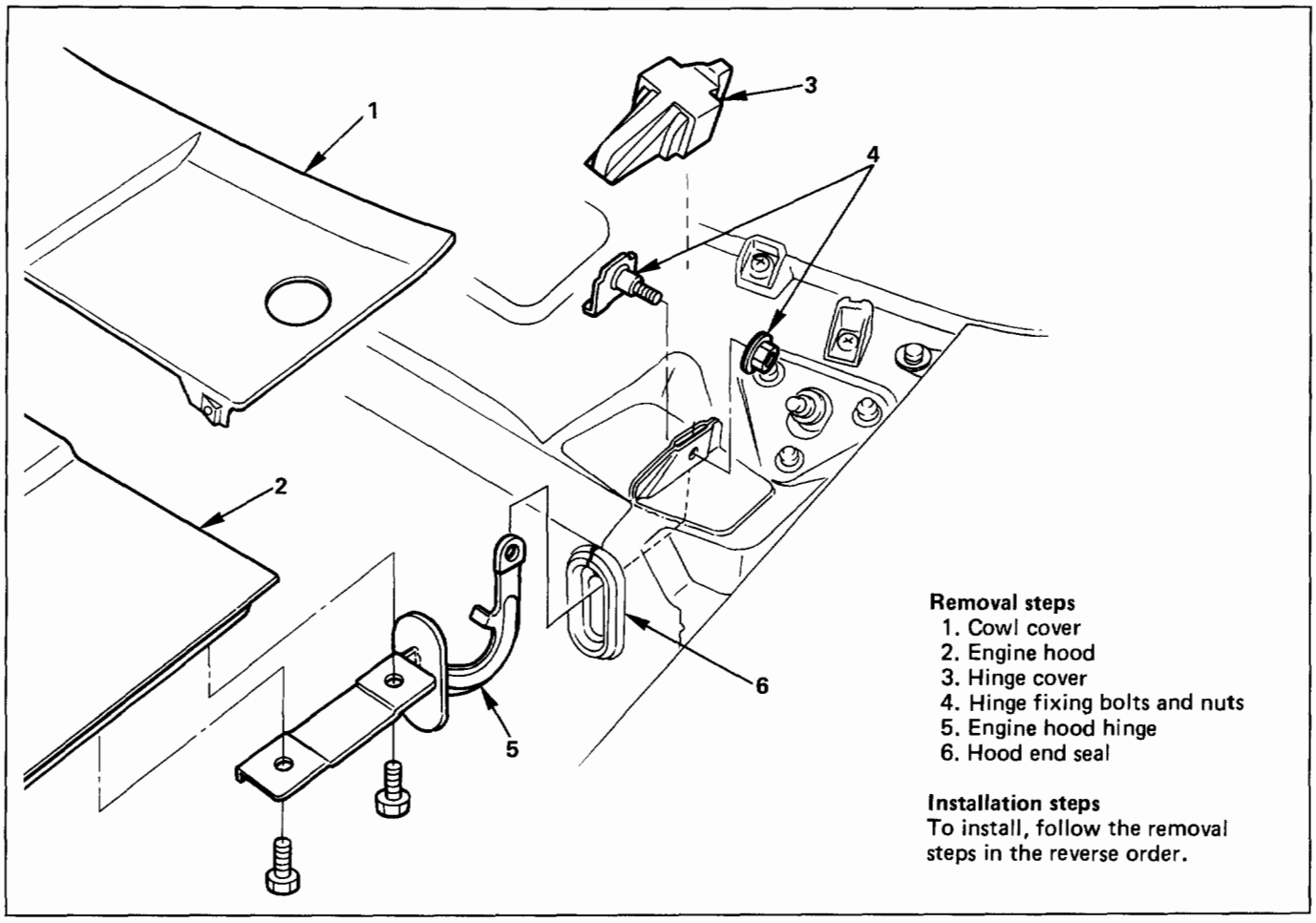

Fig. 2C-4

REMOVAL (Fig. 2C-4)

1. **Cowl cover**
   - Refer to "Cowl cover removal" in this section.
2. **Engine hood**
   - Refer to "Engine hood removal" in this section.
3. **Hinge cover**
4. **Hinge fixing bolt & nut**
5. **Engine hood hinge**
6. **Hood end seal**

INSTALLATION

To install, follow the removal steps in reverse order noting the following points:

1. Tighten the hood hinge fixing bolt and nut to the specified torque.

Tightening torque	N·m(lb·in)	13 (113)

ENGINE HOOD LOCK

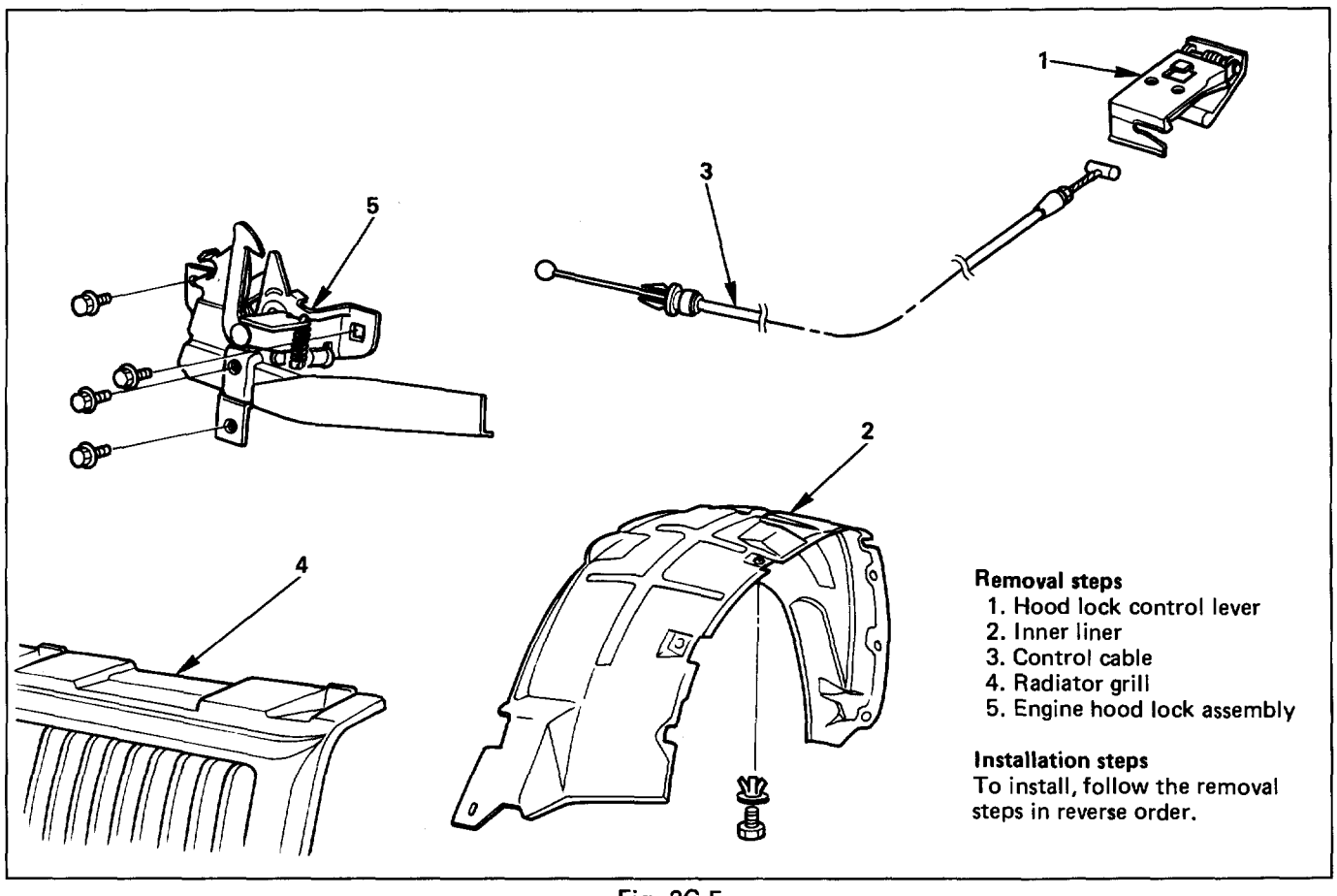

Fig. 2C-5

REMOVAL (Fig. 2C-5)

1. **Hood lock control lever**
2. **Inner liner**
3. **Control cable**
   - Remove the cable fixing clips from the body panel.
4. **Radiator grille**
   - Refer to "Radiator grille removal" in this section.

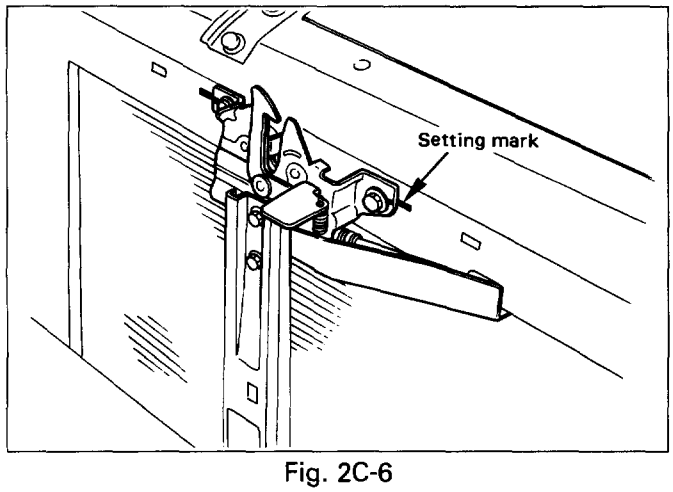

Fig. 2C-6

5. **Engine hood lock assembly**
   - Apply setting marks to the hood lock assembly and body prior to removal.

INSTALLATION

To install, follow the removal steps in reverse order noting the following points:

1. Reroute the control cable to its original position, and check and see if the lock assembly and control lever work normally.
2. Tighten the hood lock assembly fixing bolts to the specified torque.

Tightening torque	N·m(lb·in)	10 (87)

RADIATOR GRILLE AND FRONT END LOWER PANEL

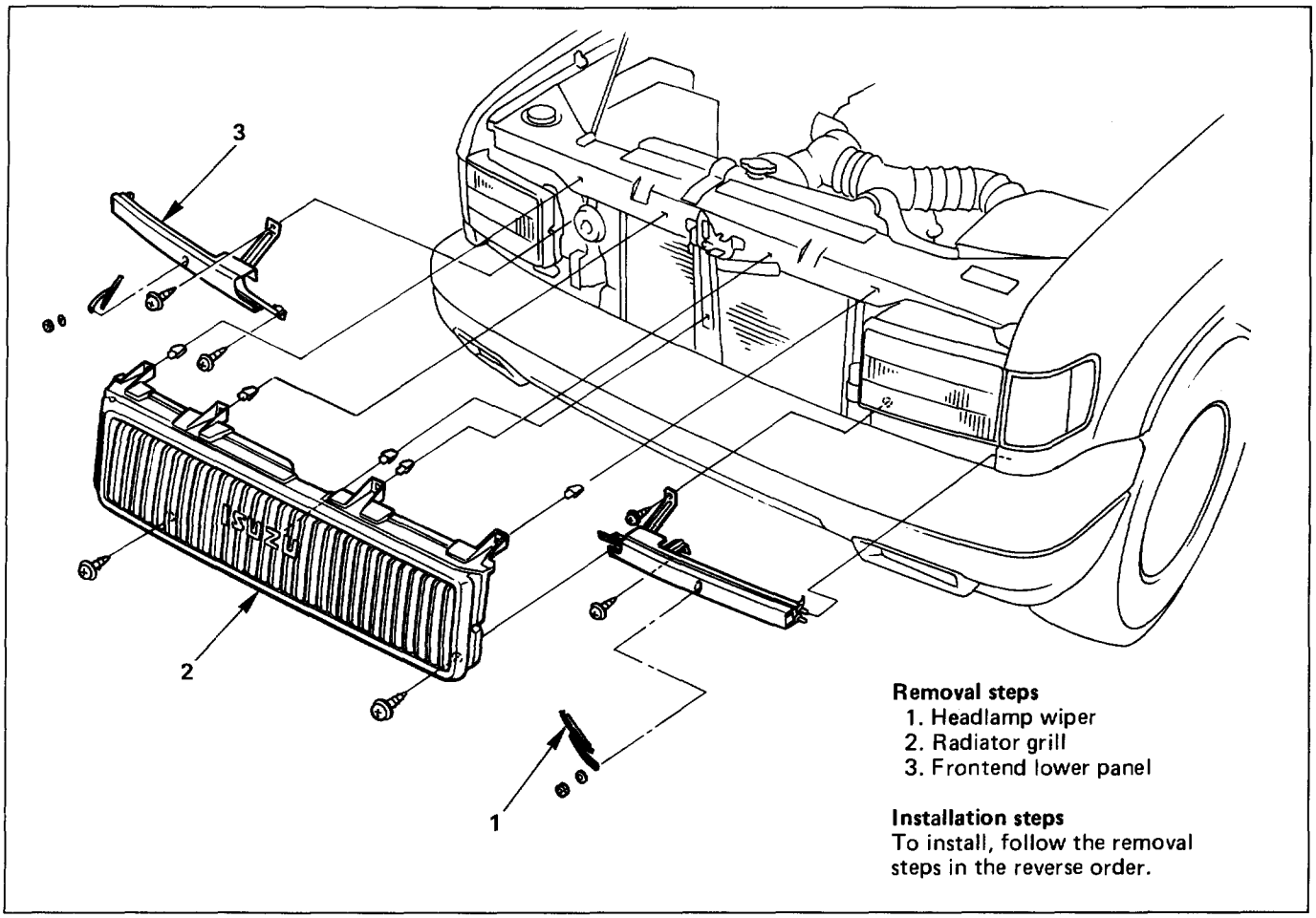

Fig. 2C-7

REMOVAL (Fig. 2C-7)

Preparation:
- Open the hood.
- Support the hood.

1. **Headlamp wiper**
   - Refer to "Headlamp wiper removal" in section 8.
2. **Radiator grille (Fig. 2C-8)**
   - Raise the clips on the radiator grille.
3. **Front end lower panel**
   - Remove two fixing screws and remove the panel from the fender.

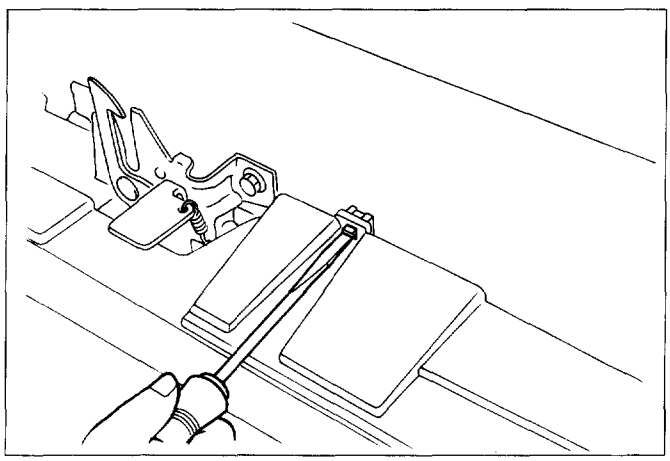

Fig. 2C-8

INSTALLATION

To install, follow the removal steps in reverse order.

1. Install the radiator grille clips remaining on the body side in the radiator grille, and then install the radiator grille on the body.

FRONT FENDER PANEL

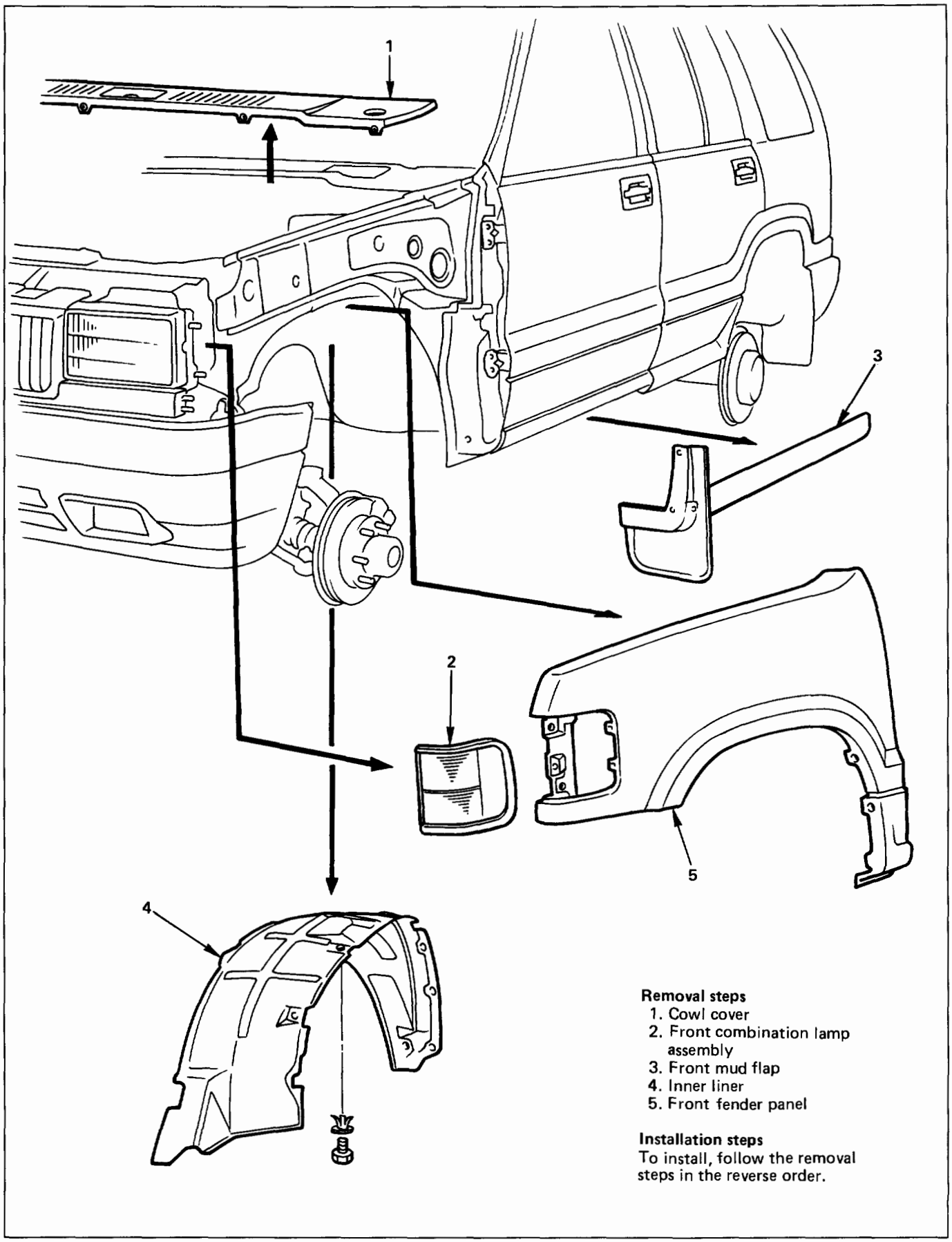

Removal steps
1. Cowl cover
2. Front combination lamp assembly
3. Front mud flap
4. Inner liner
5. Front fender panel

Installation steps
To install, follow the removal steps in the reverse order.

Fig. 2C-9

REMOVAL (Fig. 2C-5)

Preparation:
- Open the hood.
- Support the hood.

1. **Cowl cover**
   - Refer to "Cowl cover removal" in this section.
2. **Front combination lamp assembly**
   - Disconnect fixing screw and connector.
3. **Front mud flap**
   - Disconnect three fixing screws and four clips.
4. **Inner liner**
5. **Front fender panel (Fig. 2C-10)**
   - Disconnect ten fixing bolts and two nuts.

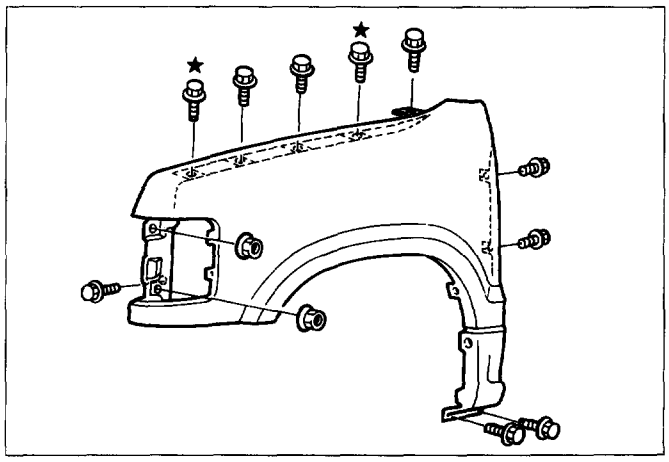

Fig. 2C-10

INSTALLATION

To install, follow the removal steps in reverse order noting the following points:

1. Tighten the front fender panel fixing bolts to the specified torque. (Fig. 2C-10)

Tightening torque N·m (lb·in)	9 (78) ★ 7 (61)

BODY MOUNTING

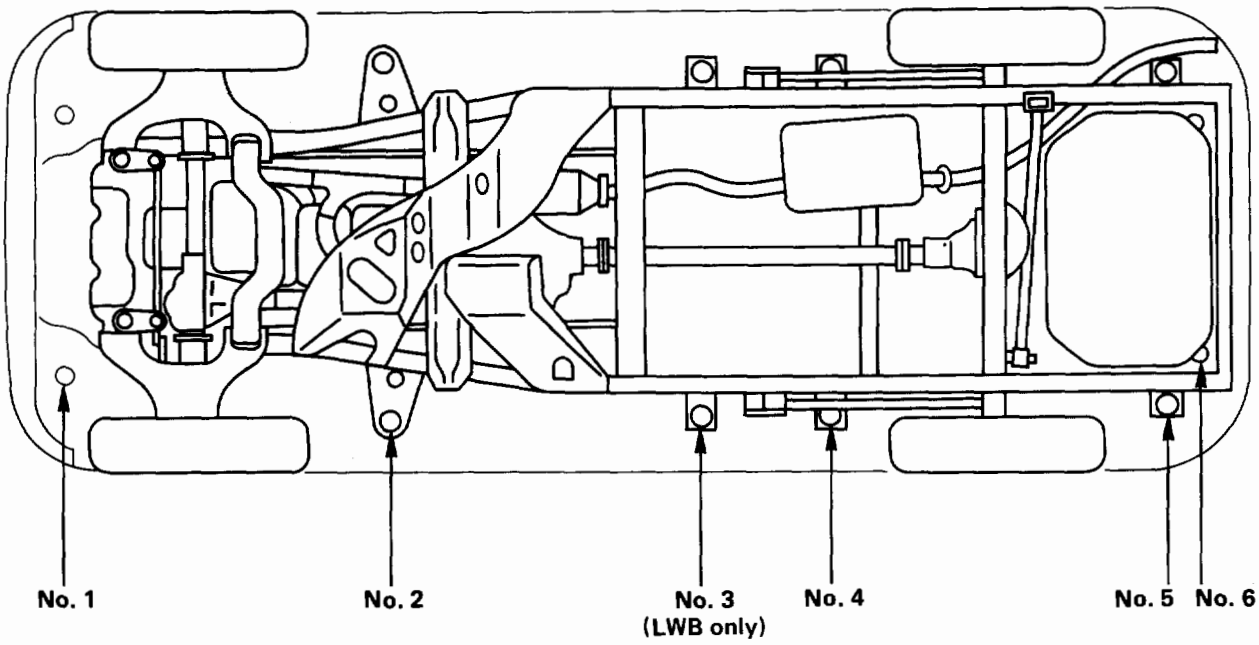

N·m(lb·ft)

No. 1 mounting

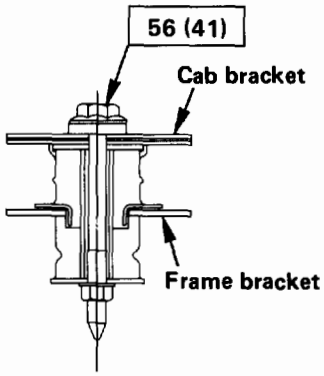

No. 2 mounting

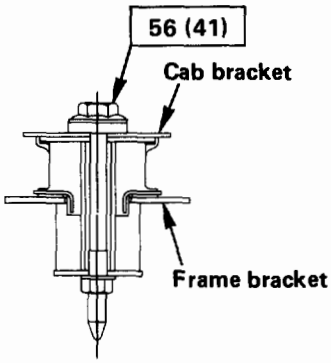

No. 3 mounting (LWB only)

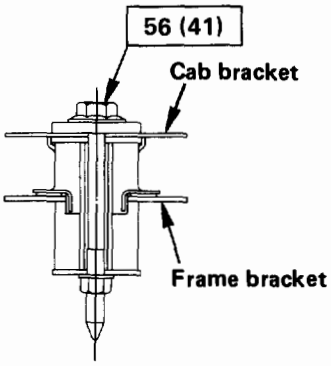

No. 4 mounting (LWB)

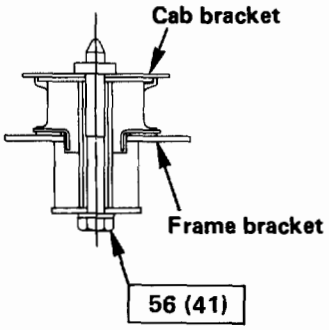

No. 4 mounting (SWB)

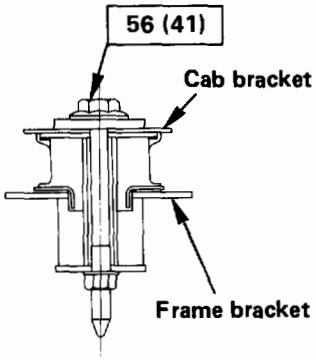

No. 5, 6 mounting

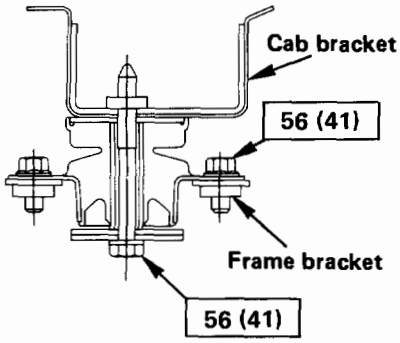

Fig. 2C-11

BODY MOUNTING

REMOVAL (No. 1 — No. 2)

Preparation:

1. Remove the front bumper.
2. Jack up the vehicle by the frame.
3. Support the front side sill (Fig. 2C-12) and rear axle (Fig. 2C-13) with stands. Further, support the front jack up point with a jack. (Fig. 2C-14)

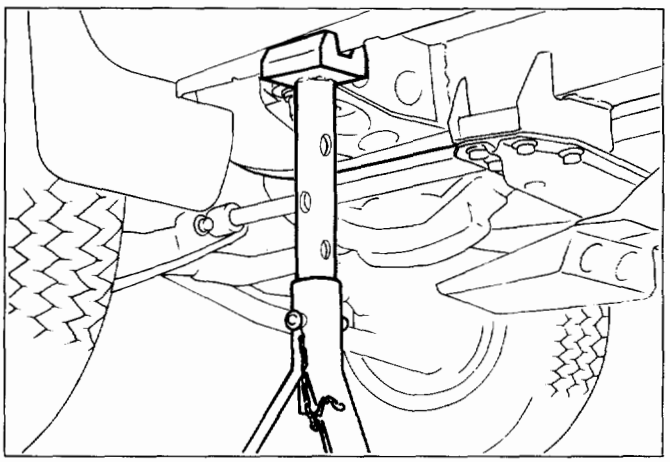

Fig. 2C-12

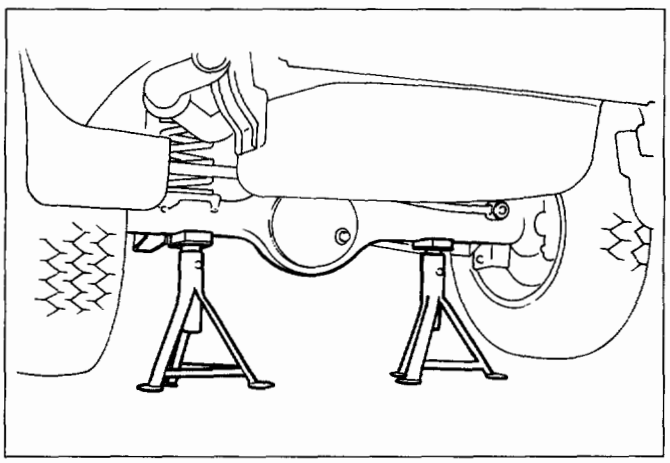

Fig. 2C-13

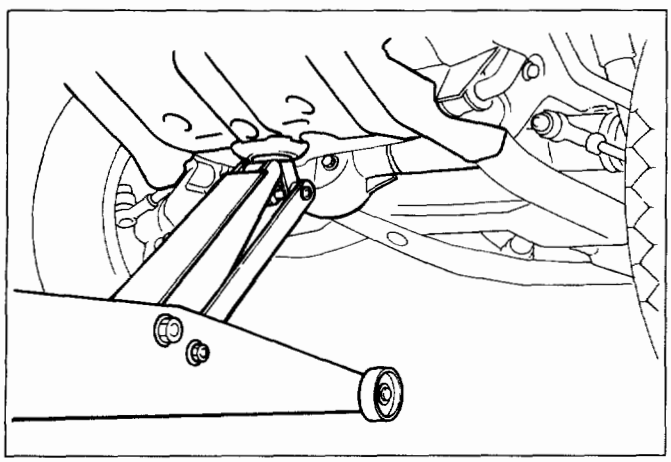

Fig. 2C-14

4. Remove the mounting bolts (No. 1 — 4) on either side.
   - No. 1
     Hold in check not to turn from the inside of the front fender.
   - No. 2
     Remove the front door sill plate and dash side trim panel, turn over the floor carpet and hold the bolt in check not to turn.
   - No. 3 (LWB only)
     Remove the rear door sill plate and center pillar lower trim cover, turn over the floor carpet and hold the bolt in check not to turn.
   - No. 4 (SWB)
     Remove the luggage side trim cover, turn over the floor carpet and hold the bolt in check not to turn.
   - No. 4 (LWB)
     Remove the bolt from under the frame.
5. Loosen the mounting bolts (No. 5 — 6) on either side.
6. Remove the frame side mounting and washer.
7. Gently lower the jack supporting the front axle until the cab side mounting can be removed.

1. Remove the cab side mounting

- Be sure to use a splice bar around the mounting to be removed. (Fig. 2C-15).

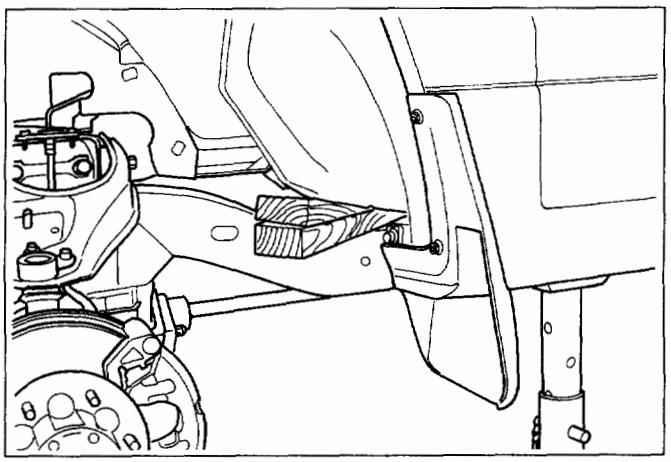

Fig. 2C-15

REMOVAL (No. 3 — No. 6)

Preparation:

1. Remove the rear bumper.
2. Jack up the vehicle by the frame.
3. Support the rear side sill (Fig. 2C-16) and frame (Fig. 2C-17) stands, and support the rear axle with a jack.

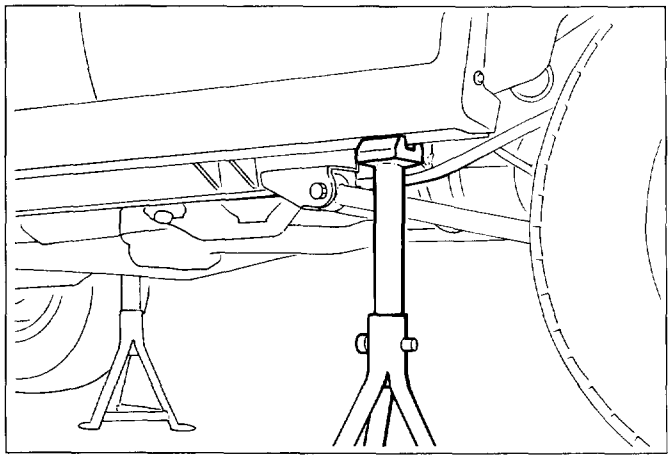

Fig. 2C-16

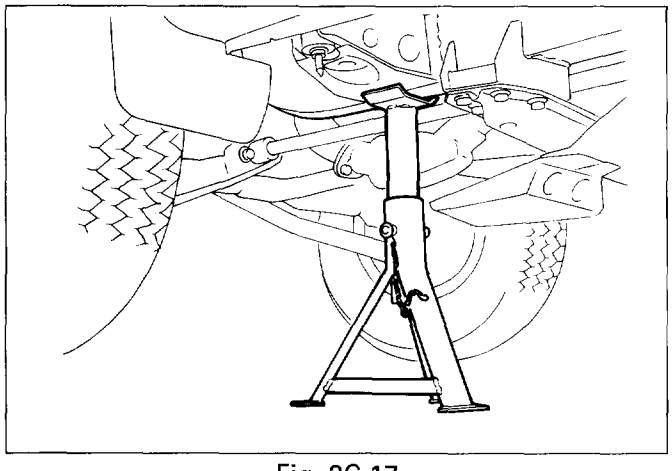

Fig. 2C-17

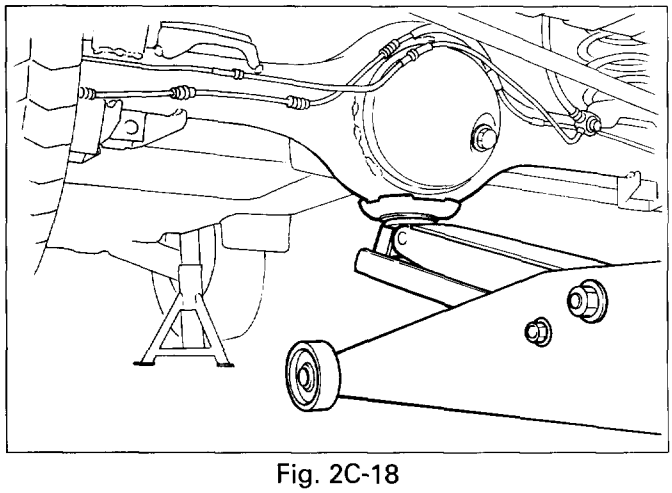

Fig. 2C-18

4. Remove the mounting bolts (No. 1 – 3) on either side.
   - No. 3 (LWB only)
     Remove the rear door sill plate and center pillar lower trim cover, turn over the floor carpet and hold the bolt in check not to turn.
   - No. 4 (SWB)
     Remove the luggage side trim cover, turn over the floor carpet and hold the bolt in check not to turn.
   - No. 4 (LWB) and No. 5 – 6
5. Remove the frame side mounting and washer.
6. Gently lower the jack supporting the rear axle until the cab side mounting, can be removed.

1. **Remove the cab side mounting.**
   - Be sure to use a splice bar around the mounting to be removed.
   - As for No. 5 and 6, remove the frame side bracket fixing bolts after lowering the frame gently. (Fig. 2C-19)

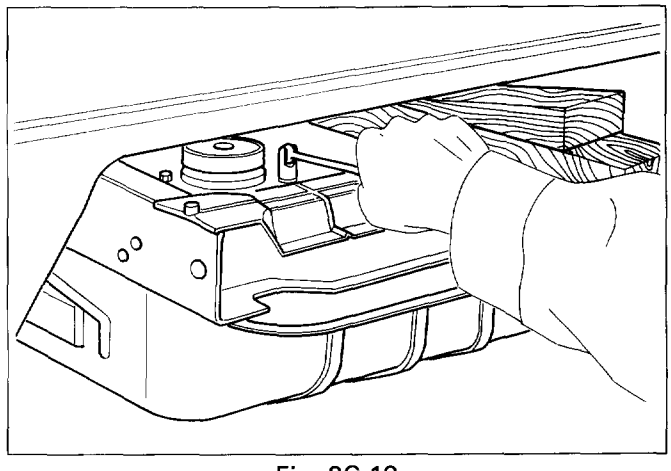

Fig. 2C-19

INSTALLATION

To install, follow the removal steps in reverse order, noting the following points:

1. Tighten each mounting bolt to the specified torque.

Tightening torque N·m(lb·ft)	56 (41)

MEMO

STEERING, SUSPENSION WHEELS AND TIRES

CONTENTS

Diagnosis ..... Section 3
Front End Alignment ..... Section 3A
Power Steering Gear and Pump ..... Section 3B1
Steering Linkage ..... Section 3B3
Front Suspension ..... Section 3C
Rear Suspension ..... Section 3D
Wheels and Tires ..... Section 3E
Supplemental Restraint System Steering Wheel and Column ..... Section 3F4

SECTION 3

DIAGNOSIS

CONTENTS

General Description 3-1
General Diagnosis 3-2
Power Steering System Diagnosis 3-5
Power Steering Pump Diagnosis 3-6
Steering Column Diagnosis 3-7
Tire Diagnosis 3-9

GENERAL DESCRIPTION

Since the problems in steering, suspension, wheels and tires involve several systems, they must all be considered when diagnosing a complaint. To identify the symptom, always road test the vehicle first. Proceed with the following preliminary inspections and correct any defects which are found.

1. Inspect tires for proper pressure and uneven wear.
2. Raise vehicle on a hoist and inspect front and rear suspension and steering linkage for loose or damaged parts.
3. Spin front wheels. Inspect for out-of-round tires, out-of-balance tires, loose and/or rough wheel bearings.

GENERAL DIAGNOSIS

Condition	Possible Cause	Correction
Vehicle Pulls	1. Mismatched or uneven tires.	Replace tire.
	2. Tires not adequately inflated.	Adjust tire pressure.
	3. Broken or sagging springs.	Replace spring.
	4. Radial tire lateral force.	Replace tire.
	5. Improper wheel alignment.	Adjust wheel alignment.
	6. Brake dragging in one wheel.	Repair brake.
	7. Loose, bent or broken front or rear suspension parts.	Tighten or replace the appropriate suspension part(s).
	8. Faulty shock absorbers.	Replace shock absorber.
Abnormal or Excessive Tire Wear	1. Sagging or broken spring.	Replace spring.
	2. Tire out of balance.	Balance or replace tire.
	3. Improper wheel alignment.	Check front end alignment.
	4. Faulty shock absorber.	Replace shock absorber.
	5. Hard driving.	Replace tire.
	6. Overloaded vehicle.	Replace tire and reduce load.
	7. Tires not rotated periodically.	Replace or rotate tire.
	8. Worn or loose road wheel bearings.	Replace wheel bearing.
	9. Wobbly wheel or tires.	Replace wheel or tire.
	10. Tires not adequately inflated.	Adjust the pressure.
Wheel Tramp or Hop	1. Blister or bump on tire.	Replace tire.
	2. Improper shock absorber operation.	Replace shock absorber.
Shimmy, Shake or Vibration	1. Tire or wheel out of balance.	Balance wheels or replace tire/or wheel.
	2. Loose wheel bearings.	Replace wheel bearing.
	3. Worn steering linkage ball joints.	Replace ball joints.
	4. Worn upper or lower end ball joints.	Replace ball joints.
	5. Excessive wheel runout.	Repair or replace wheel and/or tire.
	6. Blister or bump on tire.	Replace tire.
	7. Excessive loaded radial runout of tire/wheel assembly.	Replace tire or wheel.
	8. Improper wheel alignment.	Check wheel alignment.
	9. Loose or worn steering linkage.	Tighten or replace steering linkage.
	10. Loose steering gear.	Tighten housing bolts.
	11. Tires not adequately inflated.	Adjust tire pressure.
	12. Loose, bent or broken front or rear suspension parts.	Tighten or replace the appropriate suspension parts.
	13. Faulty shock absorber.	Replace shock absorber.
	14. Hub bearing preload misadjustment.	Adjust preload.
Hard Steering	1. Bind in steering linkage ball studs, upper or lower end ball joint.	Replace ball joint.
	2. Improper wheel alignment.	Check wheel alignment.
	3. Steering gear misadjustment.	Check and adjust pinion torque.
	4. Tire not adequately inflated.	Inflate tires to proper pressure.
	5. Bind in steering column or shaft.	Repair or replace.
	6. Improper power steering system operation.	Repair or replace. Refer to "Power steering system diagnosis"

Condition	Possible Cause	Correction
Too Much Play In Steering	1. Wheel bearings worn.	Replace wheel bearings.
	2. Loose steering gear or linkage.	Retighten or repair.
	3. Steering gear misadjustment.	Inspect and adjust steering gear preload.
	4. Worn or loose steering shaft universal joint.	Retighten or replace steering shaft.
	5. Worn steering linkage ball joints.	Replace ball joints.
	6. Worn upper or lower end ball joints.	Replace ball joints.
Poor Steering Wheel Returnability	1. Bind in steering linkage ball joints.	Replace ball joints.
	2. Bind in upper or lower end ball joints.	Replace ball joints.
	3. Bind in steering column and shaft.	Repair or replace.
	4. Bind in steering gear.	Check and repair steering gear.
	5. Improper wheel alignment.	Adjust wheel alignment.
	6. Tires not adequately inflated.	Adjust pressure.
	7. Loose steering wheel nut.	Retighten.
	8. Worn wheel bearing.	Replace.
Abnormal Noise	1. Worn, sticky or loose upper or lower end ball joint, steering linkage ball joints or drive axle joints.	Replace.
	2. Faulty shock absorbers.	Replace.
	3. Worn upper or lower control arm bushing.	Replace.
	4. Loose stabilizer bar.	Retighten bolts or replace bushings.
	5. Loose wheel nuts.	Tighten nuts. Check for elongated wheel nut holes. Replace wheel if required.
	6. Loose suspension bolts or nuts.	Retighten suspension bolts or nuts.
	7. Broken or otherwise damaged wheel bearings.	Replace wheel bearing.
	8. Broken suspension springs.	Replace spring.
	9. Loose steering gear.	Retighten mounting bolt.
	10. Faulty steering gear.	Check and adjust steering gear.
Wandering or Poor Steering Stability	1. Mismatched or unevenly worn tires.	Replace tire or inflate tires to proper pressure.
	2. Loose steering linkage ball joints.	Replace ball joints.
	3. Faulty shock absorbers.	Replace shock absorber.
	4. Loose stabilizer bar.	Tighten or replace stabilizer bar or bushings.
	5. Broken or sagging springs.	Replace spring (pairs).
	6. Steering gear misadjustment.	Check or adjust steering gear.
	7. Improper wheel alignment.	Adjust wheel alignment.

Condition	Possible Cause	Correction
Erratic Steering When Braking	1. Worn wheel bearings. 2. Broken or sagging springs. 3. Leaking caliper. 4. Warped discs. 5. Badly worn brake pads. 6. Tires are inflated unequally.	Replace wheel bearings. Replace spring (pairs). Repair or replace caliper. Replace brake disc. Replace brake pads. Inflate tires to proper pressure.
Low or Uneven Trim Height	1. Broken or sagging springs. 2. Vehicle overloaded. 3. Incorrect springs.	Replace springs (In pairs) Reduce load. Adjust or replace torsion bar.
Suspension Bottoms	1. Vehicle overloaded. 2. Faulty shock absorber. 3. Incorrect, broken or sagging springs.	Reduce load. Replace shock absorber Replace springs.
Body Leans	1. Loose stabilizer bar. 2. Faulty shock absorber, struts or mounting. 3. Broken or sagging springs. 4. Vehicle overloaded.	Tighten stabilizer bar bolts or replace bushings. Replace shock absorber. Replace springs (In pairs) Reduce load.
Cupped Tires	1. Worn wheel bearings. 2. Excessive tire or wheel run-out. 3. Worn ball joints. 4. Tire out of balance.	Replace wheel bearing. Replace tire or wheel. Replace ball joints. Adjust tire balance.

POWER STEERING SYSTEM DIAGNOSIS

HISSING NOISE

There is some noise in all power steering systems. One of the most common is a hissing sound when the steering wheel is fully turned and the car is not moving. This noise will be most evident when the wheel is operated while the brakes are applied. There is no relationship between this noise and steering performance. Do not replace the valve unless the "hissing" noise is extremely objectionable. A replacement valve will also have a slight noise, and is not always a cure for the condition.

Condition	Possible Cause	Correction
Rattle or Chucking Noise	1. Pressure hose touching other parts of vehicle.	Adjust hose position. Do not bend tubing by hand.
	2. Tie rod ends loose.	Tighten or replace tie rod end.
	3. Loose steering gear mounting.	Tighten steering gear mounting.
	4. Steering gear misadjustment.	Check and adjust steering gear preload.
Poor Return of Steering Wheel to Center	1. Improper front wheel alignment.	Adjust front wheel alignment.
	2. Wheel bearing worn.	Replace front wheel bearing.
	3. Tie rod end binding.	Replace tie rod end.
	4. Ball joint binding.	Replace ball joint.
	5. Tight or frozen steering shaft bearing.	Replace steering assembly.
	6. Steering gear misadjustment.	Adjust the steering gear.
	7. Sticky or plugged steering gear valve.	Repair or replace steering gear valve.
	8. Entry of air in the power steering system.	Bleed the system.
Momentary Increase In Effort When Turning Wheel Fast To Right or Left	1. High internal leakage.	Repair steering gear.
	2. Power steering fluid level low.	Replenish fluid.
Steering Wheel Surges or Jerks When Turning Especially During Parking	1. Insufficient pump pressure.	Repair pump assembly.
	2. Sticky steering gear valve.	Repair or replace steering gear.
	3. Power steering fluid level low.	Replenish fluid.
Excessive Wheel Kick Back or Loose Steering	1. Air in system.	Bleed hydraulic system.
	2. Tie rod end loose.	Tighten tie rod end.
	3. Wheel bearing worn.	Replace wheel bearing.
Hard Steering or Lack or Power Assist	1. Sticky steering gear valve.	Repair or replace steering gear valve.
	2. Insufficient pump pressure.	Repair pump assembly.
	3. Excessive internal pump leakage.	Repair pump assembly.
	4. Excessive internal steering gear leakage.	Repair steering gear
	5. Power steering fluid level low.	Replenish fluid.

POWER STEERING PUMP DIAGNOSIS

Foaming milky power steering fluid, low fluid level, and possible low pressure can be caused by air in the fluid, or loss of fluid due to internal pump leakage. Check for leak and correct. Bleed the system. Extremely cold temperatures will cause air bubbles in the system if the fluid level is low. If the fluid level is correct and pump still foams, remove pump from vehicle and check housing for cracks. If housing is cracked, replace pump housing.

Condition	Possible Cause	Correction
Low Pressure Due to Steering Pump	1. Relief valve sticking or inoperative. 2. Side plate not flat against cam ring. 3. Extreme wear of cam ring. 4. Scored side plate or rotor. 5. Vanes sticking in rotor slots. 6. Cracked or broken side plate. 7. High internal leakage.	Replace relief valve. Replace side plate. Replace cam ring. Replace side plate or rotor. Repair or replace vanes and rotor. Replace side plate. Repair internal leakage.
Low Pressure Due to Steering Gear	1. Scored housing bore.	Replace housing
Growling Noise In Steering Pump	1. Excessive back pressure in hoses or steering unit caused by restriction. 2. Scored side plate or rotor. 3. Worn cam ring.	Repair steering unit or pump. Replace side plate or rotor. Replace cam ring.
Groaning Noise In Steering Pump	1. Air in the fluid. 2. Low fluid level. 3. Pump mounting loose.	Bleed hydraulic system. Replenish fluid. Tighten mounting bolt.
Rattling Noise In Steering Pump	1. Vanes sticking in rotor slots. 2. Vane improperly installed.	Repair or replace vanes and rotor. Repair rotor and vane.
Swishing Noise In Steering Pump	1. Damaged relief valve.	Replace relief valve.
Whining Noise In Steering Pump	1. Scored side plate and vanes.	Replace side plate and vanes.

STEERING COLUMN DIAGNOSIS

LOCK SYSTEM

Condition	Possible Cause	Correction
Will Not Unlock	1. Damaged lock cylinder. 2. Damaged sector. 3. Damaged park lock cable.	Replace lock cylinder. Replace lock cylinder. Replace park lock cable.
Will Not Lock	1. Lock spring broken or worn. 2. Damaged lock cylinder. 3. Ignition switch stuck. 4. Park lock cable damaged.	Replace lock cylinder. Replace lock cylinder. Repair or replace ignition switch. Replace park lock cable.
Key Cannot be Removed in "OFF-LOCK"	1. Ignition switch is not set correctly. 2. Damaged lock cylinder. 3. Faulty shift lock mechanism.	Correct ignition switch. Replace lock cylinder. Repair or replace the shift lock mechanism.

COLUMN

Condition	Possible Cause	Correction
Noise in Column	1. Universal joint loose. 2. Shaft lock snap ring not seated. 3. Universal joint not lubricated.	Tighten joint. Place snap ring in proper position. Lubricate universal joint.

TURN SIGNAL SWITCH

This diagnosis covers mechanical problems only. See Section 8 for turn signal switch electrical diagnosis.

Condition	Possible Cause	Correction
Turn Signal Will Not Stay In Turn Position	1. Foreign material or loose parts preventing movement of yoke. 2. Broken or missing detent or canceling spring.	Repair or replace signal switch. Replace signal switch.
Turn Signal Will Not Cancel	1. Loose switch mounting screws. 2. Switch or anchor bosses broken. 3. Broken, missing or out of position detent, return or canceling spring. 4. Worn canceling cam.	Tighten mounting screws. Replace turn signal switch. Replace turn signal switch. Replace turn signal switch.
Turn Signal Difficult To Operate	1. Turn signal switch arm loose. 2. Yoke broken or distorted. 3. Loose or misplaced springs. 4. Foreign parts and/or material. 5. Loose turn signal switch mounting screws.	Tighten arm screw. Replace turn signal switch. Replace turn signal switch. Repair turn signal switch. Tighten mounting screws.
Turn Signal Will Not Indicate Lane Change	1. Broken lane change pressure pad or spring hanger. 2. Broken, missing or misplaced lane change spring. 3. Base of wire damaged.	Replace turn signal switch. Replace turn signal switch. Replace turn signal switch.
Hazard Switch Cannot Be Turned Off	1. Foreign material between hazard switch to turn signal switch body.	Repair or replace hazard switch.
No Turn Signal Lights	1. Electrical failure in chassis harness. 2. Inoperative turn signal flasher unit. 3. Loose chassis harness connector.	Refer to Section 8 "Electrical Diagnosis". Replace flasher unit. Repair loose connector.
Front or Rear Turn Signal Lights Not Flashing	1. Burned-out or damaged turn signal bulb. 2. High resistance connection to ground at bulb socket. 3. Loose chassis harness connector.	Replace bulb. Repair bulb socket. Repair loose connector.

TIRE DIAGNOSIS

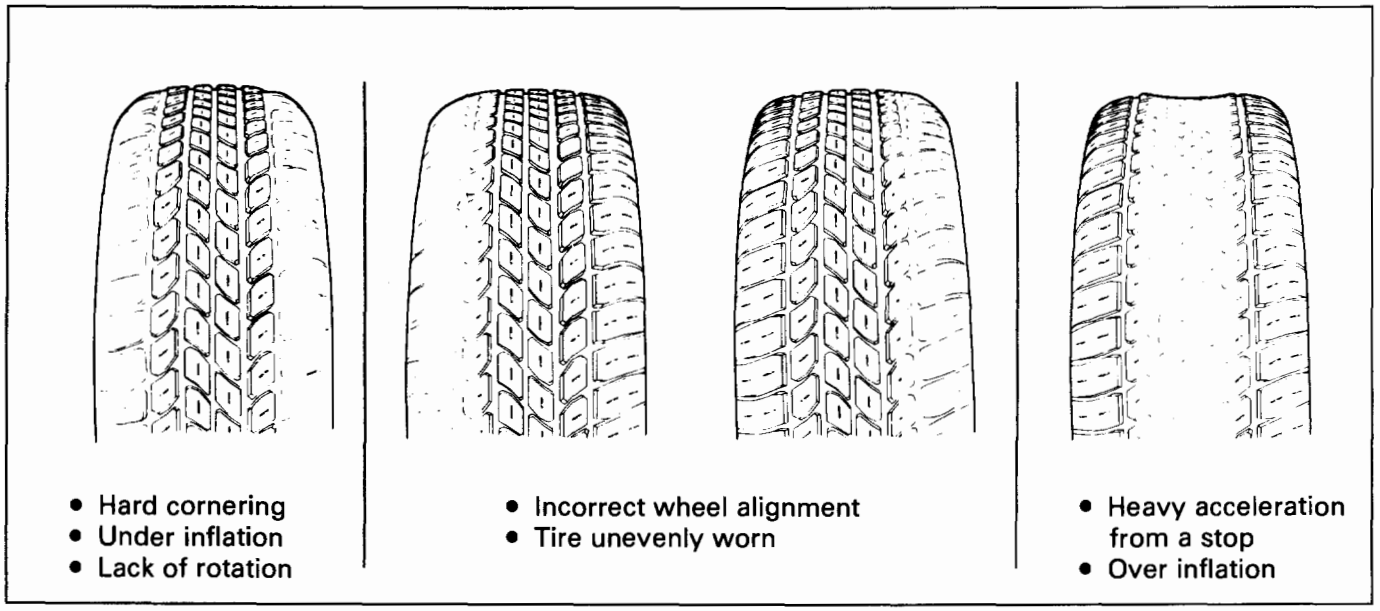

Fig. 3-1

IRREGULAR AND PREMATURE WEAR (Fig. 3-1)

Irregular and/or premature wear has many causes. Some of them are incorrect inflation pressures, lack of tire rotation, poor driving habits or improper wheel alignment. Incorrect inflation is common cause of tire premature wear.

NOTE:
Due to their design, radial tires tend to wear faster in the shoulder area, particularly on the front tires. This makes regular rotation especially necessary. After rotation, be sure to check wheel nut torque, and set tire pressures.

TIRE ROTATION (Fig. 3-2)

Tire rotation is recommended to equalize wear for longer tire life.

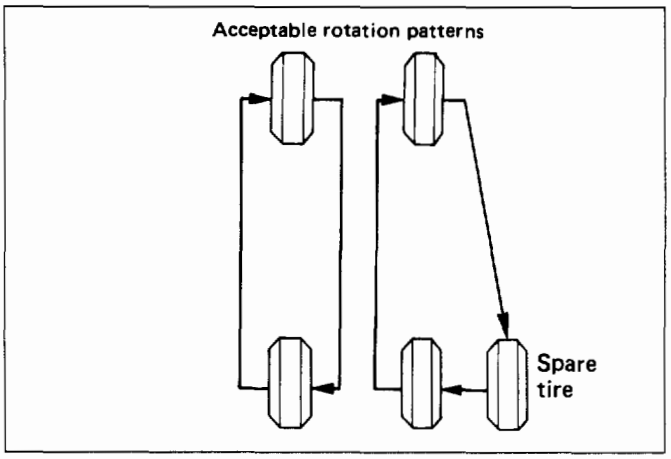

Fig. 3-2

If the following conditions are noted, rotate the tires:

- Front tire wear is different from rear.
- Uneven wear exists across the tread of any tire.
- Left and right front tire wear is unequal.
- Left and right rear tire wear is unequal.

Check wheel alignment if the following conditions are noted:

- Left and right front tire wear is unequal.
- Wear is uneven across the tread of any front tire.
- Front tire treads have a scuffed appearance with "feather" edges on one side of the tread ribs or blocks.

TREAD WEAR INDICATORS (Fig. 3-3)

The original equipment tires have built-in tread wear indicators to show when tires need replacement. These indicators may appear as wide bands. When the indicators appear in two or more grooves at three locations, tire replacement is recommended.

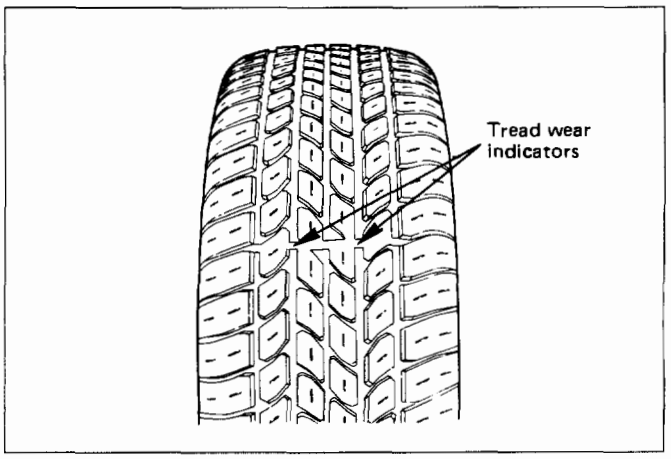

Fig. 3-3

RADIAL TIRE WADDLE (Fig. 3-4)

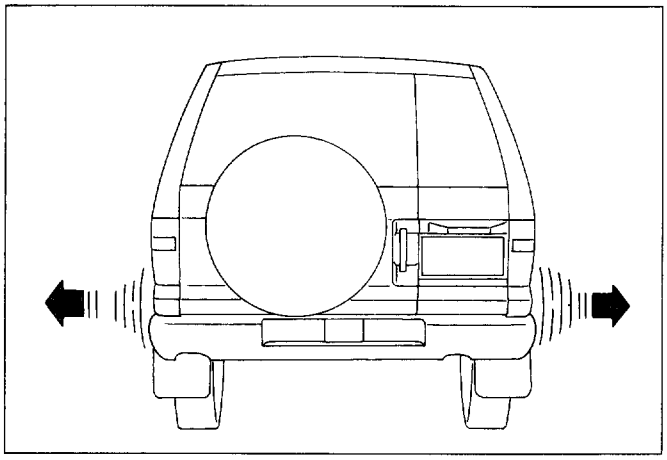

Fig. 3-4

Waddle is side-to-side movement at the front and/or rear of the car. It can be caused by the steel belt not being straight within the tire, or by excessive lateral runout of the tire or wheel. It is most noticeable at low speed, about 8 to 48 km/h (5 to 30 mph). It may also cause rough ride at 80 to 113 km/h (50 to 70 mph).

The car can be road tested to see which end of the car has the faulty tire. If the tire causing the waddle is on the rear, the rear end of the car will "waddle". From the driver's seat, it feels as if someone is pushing on the side of the car.

If the faulty tire is on the front, the waddle is more easily seen. The front sheet metal appears to be moving back and forth. It feels as if the driver's seat is the pivot point in the car.

Another more time-consuming method of determining the faulty tire is substituting tire and wheel assemblies that are known to be good. Follow these steps:

1. Drive the car to determine if the waddle is coming from the front or rear.
2. Install tire and wheel assemblies known to be good (from a similar car) in place of those on the end of the car which is waddling. If the waddle cannot be isolated to front or rear, start with the rear tires.
3. Road test again. If improvement is noted, install the original tire and wheel assemblies one at a time until the faulty tire is found. If no improvement is noted, install tires known to be good in place of all four. Then, install the originals one at a time until the faulty tire is found.

RADIAL TIRE LEAD/PULL (Fig. 3-5)

"Lead/Pull" is vehicle deviation from a straight path, on a level road with no pressure on the steering wheel.

Lead is usually caused by:

1. Poorly manufactured radial tires.
2. Uneven brake adjustment.
3. Wheel alignment.

The way in which a tire is built can produce lead in a car. An example of this is placement of the belt. Off-center belts on radial tires can cause the tire to develop a side force while rolling straight down the road and the tire will tend to roll like a cone.

The "Radial Tire Lead/Pull Correction" chart (Fig. 3-5) should be used to make sure that front wheel alignment is not mistaken for tire lead.

Rear tires will not cause lead/pull.

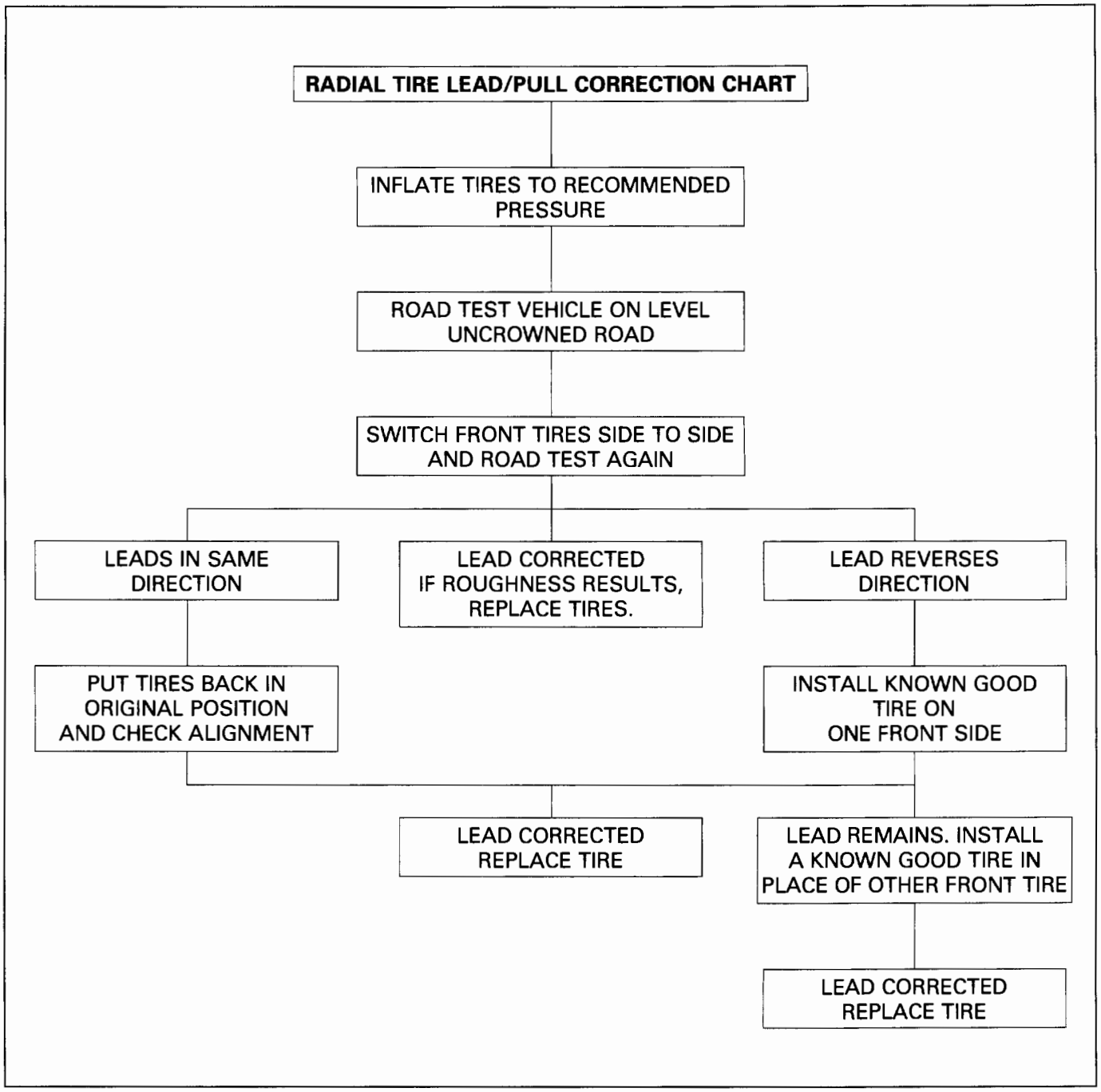
RADIAL TIRE LEAD/PULL CORRECTION CHART
INFLATE TIRES TO RECOMMENDED PRESSURE
ROAD TEST VEHICLE ON LEVEL UNCROWNED ROAD
SWITCH FRONT TIRES SIDE TO SIDE AND ROAD TEST AGAIN
LEADS IN SAME DIRECTION
LEAD CORRECTED IF ROUGHNESS RESULTS, REPLACE TIRES.
LEAD REVERSES DIRECTION
PUT TIRES BACK IN ORIGINAL POSITION AND CHECK ALIGNMENT
INSTALL KNOWN GOOD TIRE ON ONE FRONT SIDE
LEAD CORRECTED REPLACE TIRE
LEAD REMAINS. INSTALL A KNOWN GOOD TIRE IN PLACE OF OTHER FRONT TIRE
LEAD CORRECTED REPLACE TIRE

Fig. 3-5

MEMO

SECTION 3A

FRONT END ALIGNMENT

CAUTION:
When fasteners are removed, always reinstall them at the same location from which they were removed. If a fastener needs to be replaced, use the correct part number fastener for that application. If the correct part number fastener is not available, a fastener of equal size and strength (or stronger) may be used. Fasteners that are not reused, and those requiring thread locking compound will be called out. The correct torque value must be used when installing fasteners that require it. If the above conditions are not followed, parts or system damage could result.

CONTENTS

General Description 3A-1
Definition of Terms 3A-2
On-Vehicle Service 3A-3
Inspection 3A-3
Trim Height Adjustment 3A-3
Caster Adjustment 3A-3
Camber Adjustment 3A-4
Toe-in Adjustment 3A-5
Maximum Steering Angle Adjustment 3A-5
Main Data and Specifications 3A-6
General Specifications 3A-6
Torque Specifications 3A-6

GENERAL DESCRIPTION

"Front End Alignment" refers to the angular relationship between the front wheels, the front suspension attaching parts and the ground.
Proper front end alignment must be maintained in order to insure efficient steering, good directional stability and to prevent abnormal tire wear.
The most important factors of front end alignment are wheel toe-in, wheel camber and axle caster.

DEFINITION OF TERMS

CAMBER (Fig. 3A-1)

Camber is the inward or outward tilting of the front wheels from the vertical. When the wheels tilt outward at the top, the camber is positive (+). When the wheels tilt inward at the top, the camber is negative(−). The amount of tilt measured in degrees from the vertical is called the camber angle.

If camber is extreme or unequal between the wheels, improper steering and excessive tire wear will result. Negative camber causes wear on the inside of the tire, while positive camber causes wear to the outside.

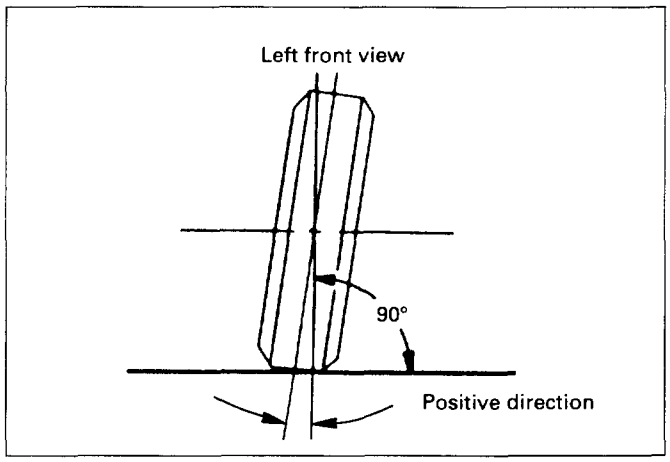

Fig. 3A-1

CASTER (Fig. 3A-2)

Caster is the tilting of the wheel axis either forward or backward from the vertical (when viewed from the side of the vehicle). A backward tilt is positive(+) and a forward tilt is negative(−).

On the short and long arm type suspension you cannot see a caster angle without a special instrument, but if you look straight down from the top of the upper control arm to the ground, the ball joints do not line up (fore and aft) when a caster angle other than 0 degree is present. With a positive angle, the lower ball joint would be slightly ahead (toward the front of the vehicle) of the upper ball joint center line.

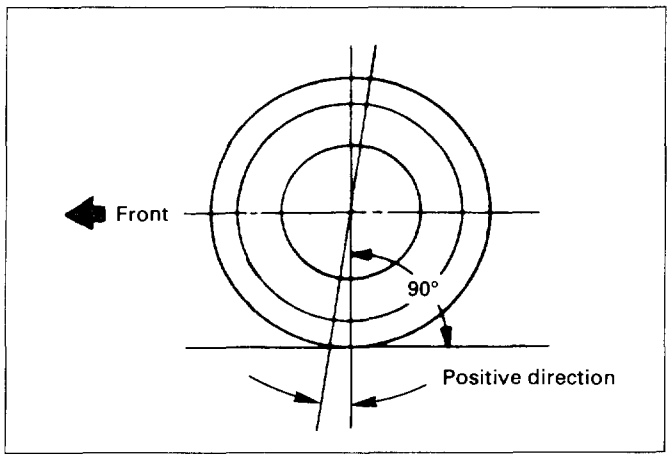

Fig. 3A-2

TOE-IN (Fig. 3A-3)

Toe-in is the turning of the front wheels. The actual amount of toe-in is normally a fraction of a degree. Toe-in is measured from the center of the tire treads or from the inside of the tires. The purpose of toe-in is to insure parallel rolling of the front wheels and to offset any small deflections of the wheel support system which occurs when the vehicle is rolling forward. Incorrect toe-in results in excessive toe-in and unstable steering. Toe-in is the last alignment to be set in the front end alignment procedure.

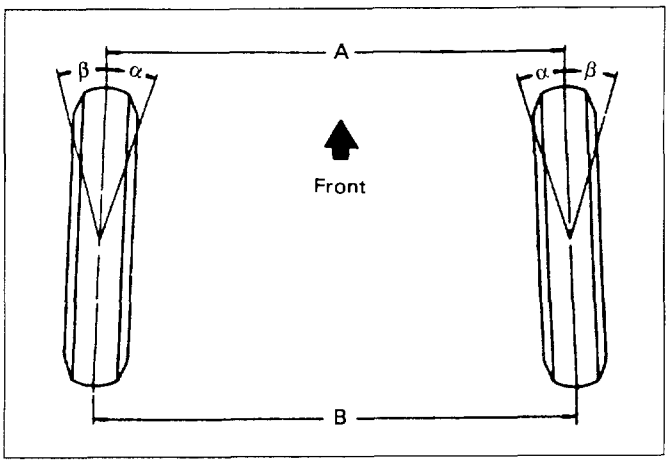

Fig. 3A-3

ON-VEHICLE SERVICE

INSPECTION

Before making any adjustments affecting caster, camber or toe-in, the following front end inspection should be made.

INSPECT

1. Tires for proper inflation pressure. Refer to "Wheels and Tires" in section 3E.
2. Front wheel bearings for proper adjustment. Refer to "Front Wheel Drive" in section 4C.
3. Ball joints, tie rod ends and relay rods. If excessive looseness is noted, correct before adjusting. Refer to "Steering Linkage" in section 3B3.
4. Wheel and tires for run-out. Refer to "Wheels and Tires" in section 3E.
5. Trim height. If not within specifications, the correction must be made before adjusting caster.
6. Steering gear for looseness at the frame.
7. Shock absorbers for leaks or any noticeable noise.
   Refer to "Front Suspension" in section 3C.
8. Control arms or stabilizer bar attachment for looseness. Refer to "Front Suspension" in section 3C.
9. Alignment equipment. Follow the manufacturer's instructions.
10. Level of the vehicle. The vehicle must be on a level surface.

TRIM HEIGHT ADJUSTMENT

Adjust the trim height by means of the adjusting bolt on the height control arms (Fig. 3A-4 and 5).

CAUTION:
When adjusting front end alignment, be sure to begin with trim height as trim height adjustment may change other adjusted alignments.

1. Check and adjust the tire inflation pressures.
2. Park the vehicle on a level ground and move the front of the vehicle up and down several times to settle the suspension.
3. Make necessary adjustment with the adjusting bolt on the height control arms.

WHEEL ALIGNMENT SPECIFICATION

Trim height (Z)	129 mm (5.08 in)

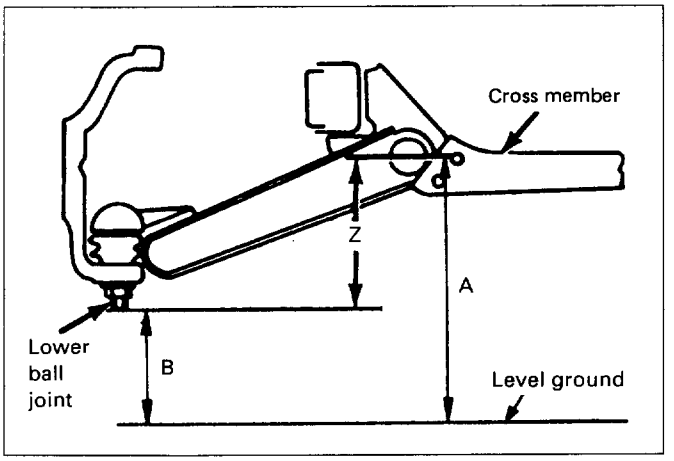

Fig. 3A-4

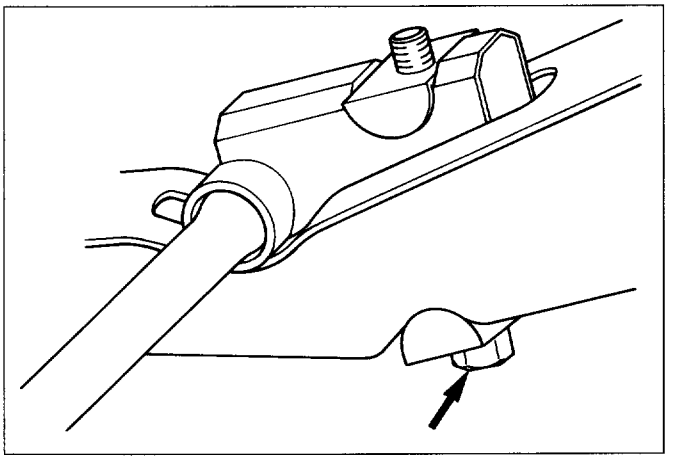

Fig. 3A-5

CASTER ADJUSTMENT

The caster angle can be adjusted by means of the caster shims installed between the chassis frame and fulcrum pins (Fig. 3A-6 and 7).

WHEEL ALIGNMENT SPECIFICATION

Caster angle	LWB	2°10′ ± 45′
	SWB	2° ± 45′

CAUTION:
Left and right side to be equal within 30′

NOTE:
Difference of the caster shim front/rear thickness shall be 3.6 mm (0.142 in) or less. Overall thickness of caster shim and camber shim shall be 10.8 mm (0.425 in) or less.

- Tighten the fulcrum pin bolt to the specified torque.

Torque	N·m (lb·ft)	152 (112)

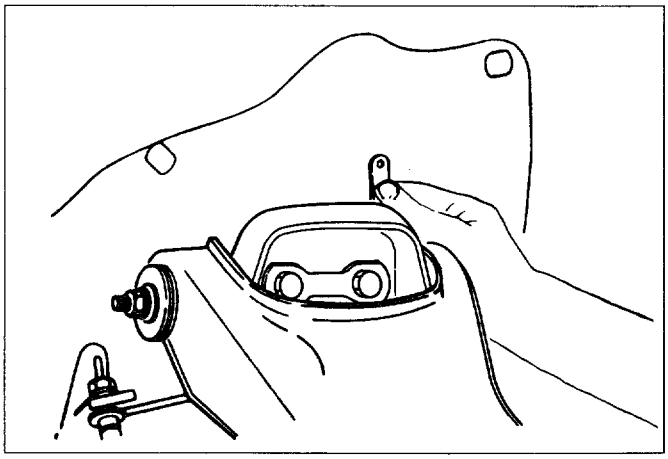

Fig. 3A-6

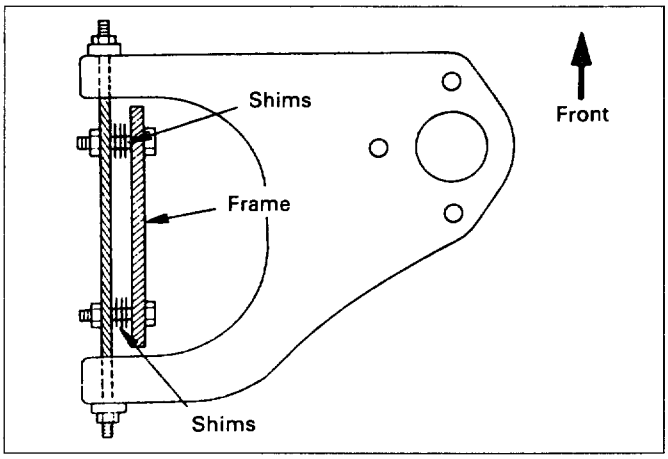

Fig. 3A-7

CAMBER ADJUSTMENT

The camber angle can be adjusted by means of the camber shims installed in position between the chassis frame and fulcrum pins (Fig. 3A-8 and 9).

WHEEL ALIGNMENT SPECIFICATION

Camber angle	0° ± 30′
King pin inclination	12° 30′ ± 30′

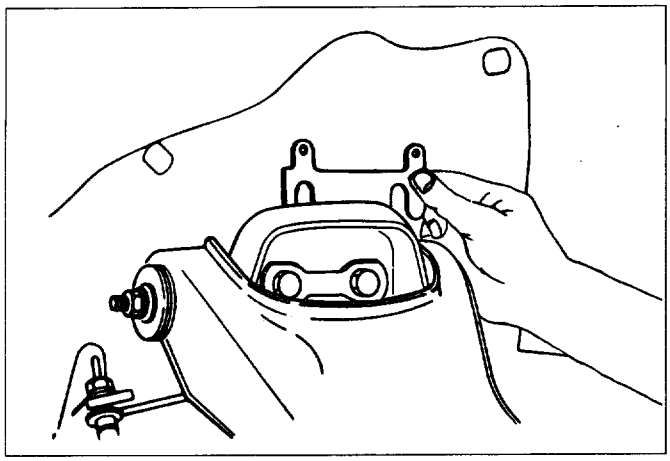

Fig. 3A-8

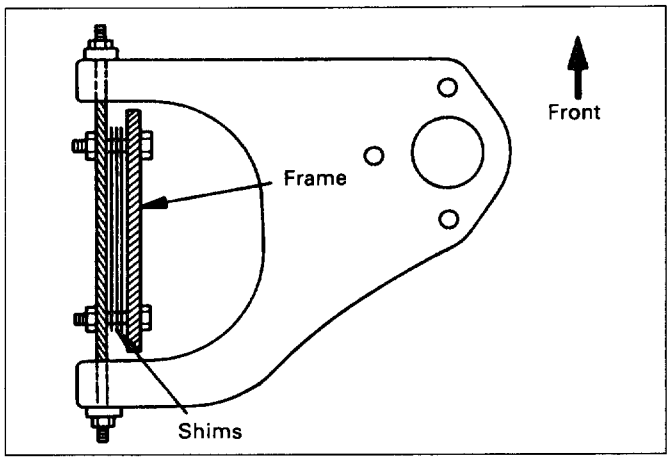

Fig. 3A-9

CAUTION:
Left and right side to be equal within 30′

NOTE:
Overall thickness of caster shim and camber shim shall be 10.8 mm (0.425 in) or less.

- Tighten the fulcrum pin bolt to the specified torque.

Torque	N·m (lb·ft)	152 (112)

	Position of shims		Camber angle	Caster angle
	Front side	Rear side		
Caster shim	When added	When removed	Decreases	Decreases
	When removed	When added	Increases	Increases
	———	When removed	Unchanged	Decreases
	———	When added	Unchanged	Increases
Camber shim	When added		Decreases	Unchanged
	When removed		Increases	Unchanged

TOE-IN ADJUSTMENT

1. To adjust the toe-in angle, loosen the lock nuts on the outer track rods and turn the outer track rods. Turn both rods the same amount, to keep the steering wheel centered (Fig. 3A-10).

WHEEL ALIGNMENT SPECIFICATIONS

Toe-in	mm (in)	0 ± 2 (0 ± 0.08)

2. Tighten the lock nut to the specified torque.

Torque	N·m (lb·ft)	118 (87)

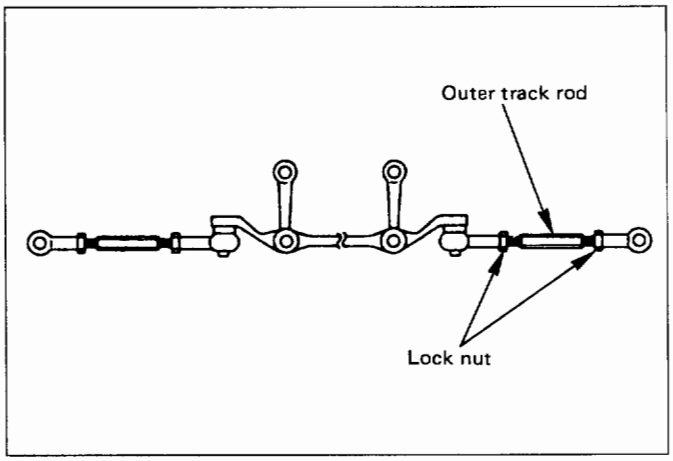

Fig. 3A-10

MAXIMUM STEERING ANGLE ADJUSTMENT

The maximum steering angle of the front wheels can be adjusted with the stopper bolts under the frame side members (Fig. 3A-11).

1. Position each front wheel on the turning radius gauge in a straight-ahead position.
2. Set the parking brake firmly.
3. Adjust the inside wheel angle of each side with the stopper bolts.
   NOTE: • The maximum protruding length (L) of stopper bolt from the lock nut should be 10 mm or less (Fig. 3A-12)
4. Similarly adjust the inside wheel angle of the other side with stopper bolt.

WHEEL ALIGNMENT SPECIFICATION

Inside wheel	$34^{\circ}\ ^{+0^{\circ}}_{-2^{\circ}}$
Outside wheel	32°

NOTE:
Maximum steering angles should be set after adjusting front wheel alignment.

5. If the stopper between the lower link end and the knuckle comes ahead of the stopper bolt (Fig. 3A-13), adjust the stopper bolt so that inner stopper bolt touches the drop arm (relay lever).
6. Tighten the lock nut to the specified torque.

Torque	N·m (lb·ft)	23 (17)

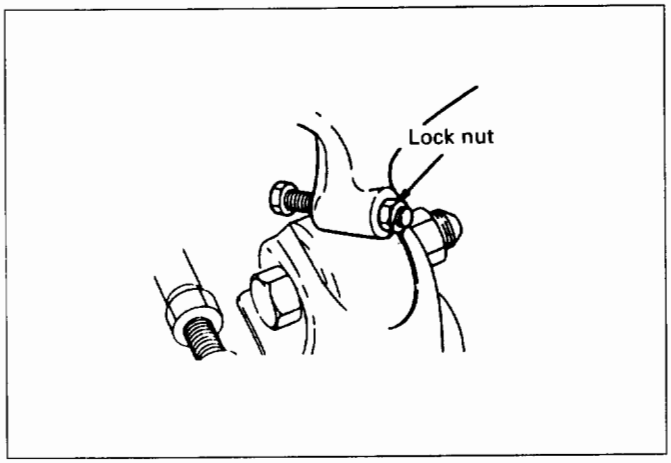

Fig. 3A-11

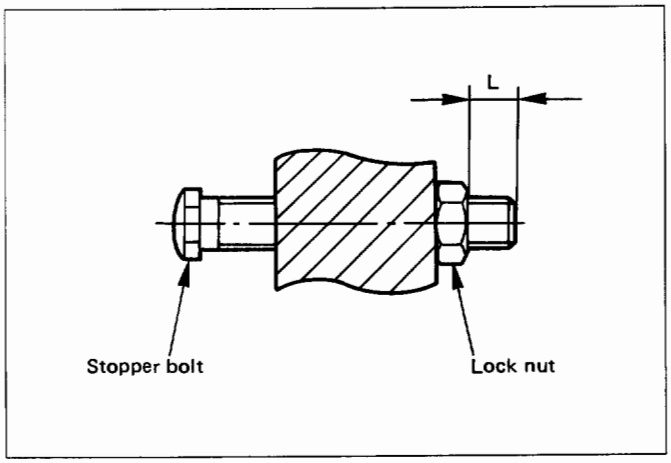

Fig. 3A-12

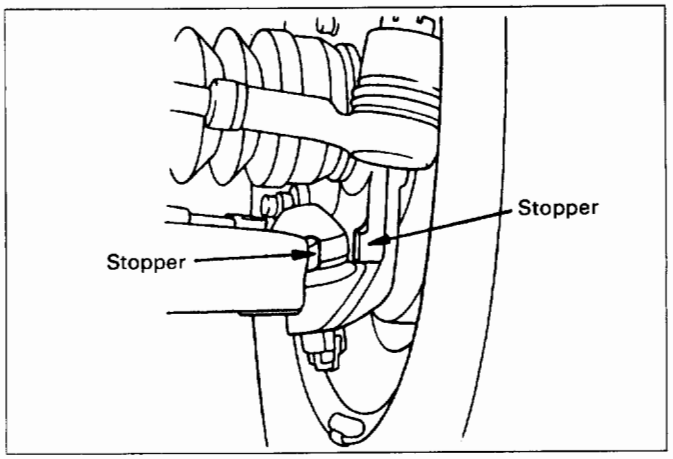

Fig. 3A-13

MAIN DATE AND SPECIFICATION

GENERAL SPECIFICATION

Caster		2° 10′ ± 45′(LWB) 2° ± 45′ (SWB)
Camber		0° ± 30′
King pin inclination		12° 30′ ± 30′
Toe-in	mm (in)	0 ± 2 (0 ± 0.08)
Max. steering angle	(inside)	$34^{\circ}\ ^{+0^{\circ}}_{-2^{\circ}}$
	(outside)	32°

TORQUE SPECIFICATION

N·m (lb·ft)

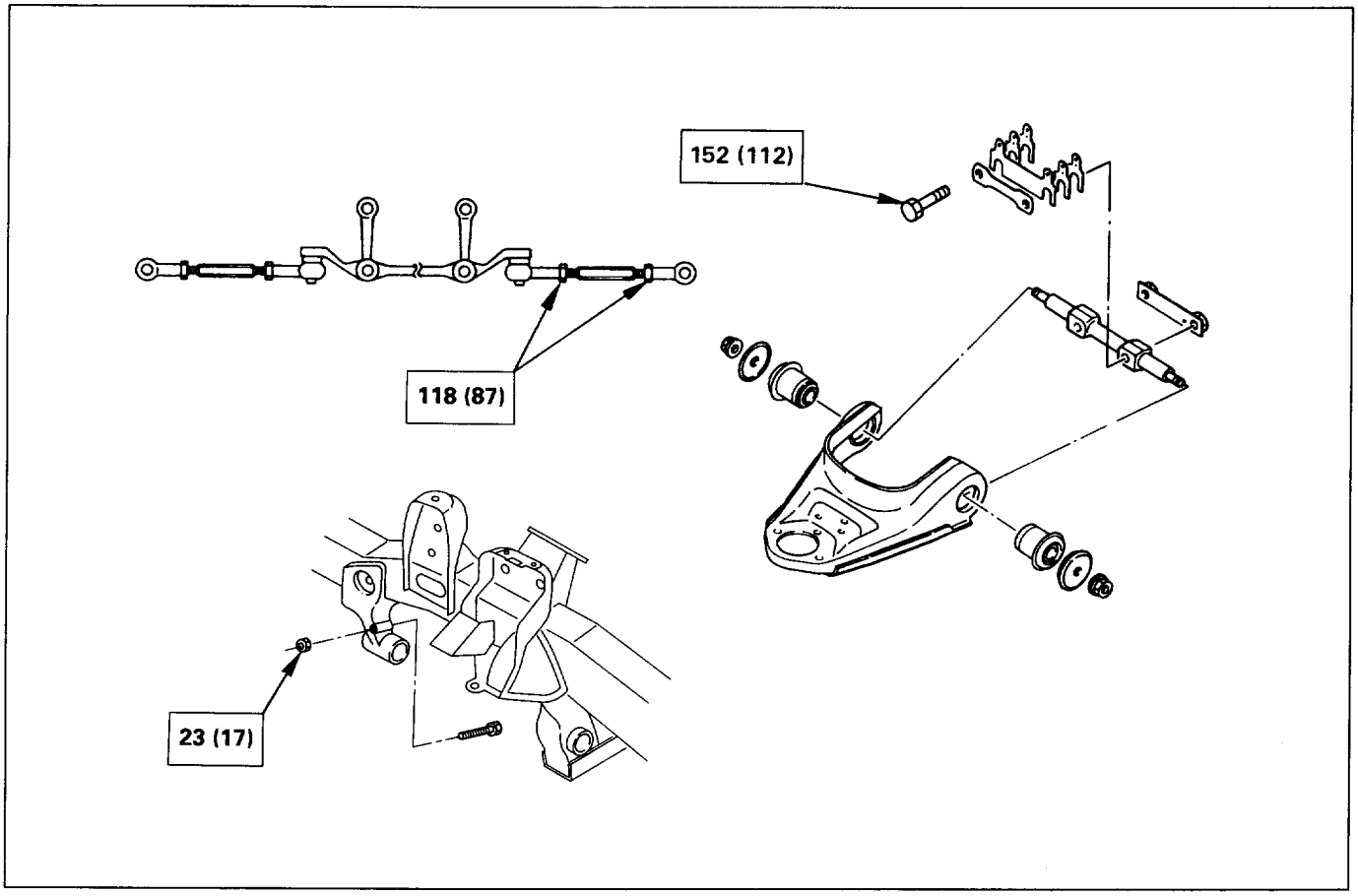

Fig. 3A-14

SECTION 3B1

POWER STEERING GEAR AND PUMP

CAUTION:
When fasteners are removed, always reinstall them at the same location from which they were removed. If a fastener needs to be replaced, use the correct part number fastener for that application. If the correct part number fastener is not available, a fastener of equal size and strength (or stronger) may be used. Fasteners that are not reused, and those requiring thread locking compound, will be called out. The correct torque value must be used when installing fasteners that require it. If the above conditions are not followed, parts or system damage could result.

CONTENTS

General Description 3B1- 1
Power Steering Gear 3B1- 1
Hydraulic Pump 3B1- 1
Pressure Switch 3B1- 1
Power Steering System Test 3B1- 3
On-Vehicle Service 3B1- 4
Maintenance 3B1- 4
Fluid Level 3B1- 4
Bleeding The Power Steering System 3B1- 4
Bleeding Procedure 3B1- 4
Flushing The Power Steering System 3B1- 4
Steering Wheel Free Play Adjustment 3B1- 5
Steering Gear 3B1- 6
Power Steering Pump 3B1- 8
Unit Repair 3B1- 9
Steering Gear 3B1- 9
Power Steering Pump 3B1- 14
Main Data and Specifications 3B1- 17
General Specifications 3B1- 17
Torque Specifications 3B1- 17
Special Tools 3B1- 18

GENERAL DESCRIPTION

The hydraulic power steering system consists of a pump, an oil reservoir, a steering gear, a pressure hose and a return hose.

POWER STEERING GEAR

The power steering gear has a recirculating ball system which acts as a rolling thread between the worm shaft and the rack piston. When the worm shaft is turned right, the rack piston moves up in gear. Turning the worm shaft left moves the rack piston down in gear. The rack piston teeth mesh with the sector, which is part of the sector shaft.
Turning the worm shaft turns the sector shaft, which turns the wheels through the steering linkage.
The control valve in the steering gear directs the power steering fluid to either side of the rack piston. The rack piston converts the hydraulic pressure into a mechanical force. If the steering system becomes damaged and loses hydraulic pressure, the vehicle can be controlled manually (Fig. 3B1-1).

HYDRAULIC PUMP

The hydraulic pump is vane-type design. The submerged pump has housing and internal parts that are inside the reservoir and operate submerged in oil. There are two bore openings at the rear of the pump housing. The larger opening contains the cam ring, pressure plate, thrust plate, rotor and vane assembly, and end plate. The smaller opening contains the pressure line union, flow control valve and spring (Fig. 3B1-2).

PRESSURE SWITCH

When hydraulic pressure reaches 3920 ± 690 kPa (570 ± 100 psi), the pressure switch closes causing Engine Control Module (ECM) to actuate the idle air control valve to prevent the overload-induced engine speed down. The switch opens when hydraulic pressure drops to 2970 ± 560 kPa (430 ± 80 psi).

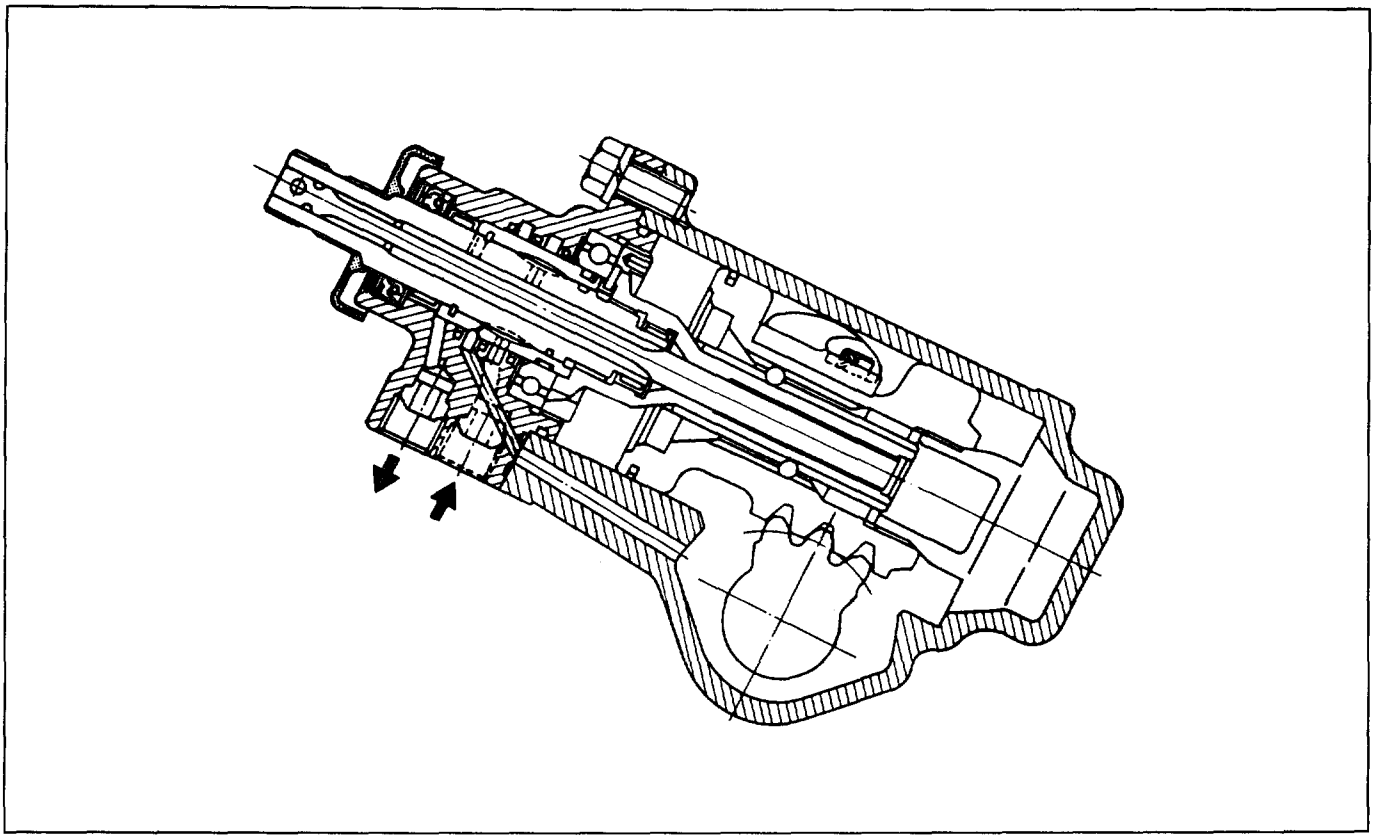

Fig. 3B1-1

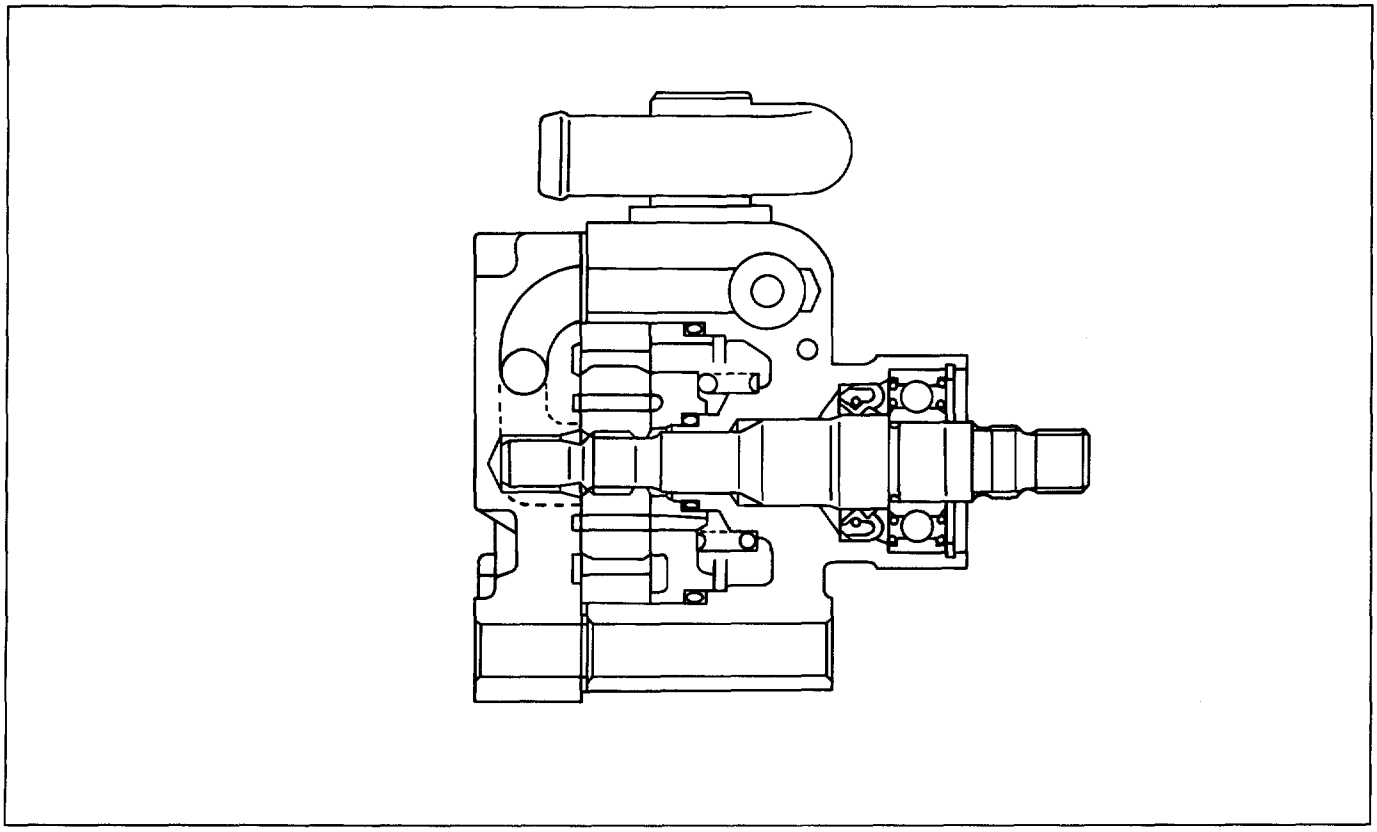

Fig. 3B1-2

POWER STEERING SYSTEM TEST

TEST PROCEDURE

Test of fluid pressure in the power steering system is performed to determine whether or not the oil pump and power steering unit are functioning normally.
The power steering system test is method used to identify and isolate hydraulic circuit difficulties. Prior to performing this test, the following inspections and corrections, if necessary, must be made.

INSPECT

- Pump reservoir for proper fluid level.
- Pump belt for proper tension.
- Pump driver pulley condition.

1. Place a container under the pump to catch the fluid when disconnecting or connecting the hoses.
2. With the engine NOT running, disconnect the pressure hose at the power steering pump and install Power Steering tester (Fig. 3B1-3).
   The gage must be between the shutoff valve and pump. Open the shutoff valve.
   Tester: J-29877-A
   Adapter: J-39213
3. Check the fluid level. Fill the reservoir with power steering fluid, to the "Full" mark. Start the engine and, momentarily holding steering wheel against stop, check the connections at tester for leakage.
4. Bleed the system. Refer to "Bleeding the Power Steering System".
5. Start the engine and check the pump fluid level. And power steering fluid if required. When the engine is at normal operating temperature, increase engine speed to 1500 rpm.

CAUTION:
Do not leave shutoff valve fully closed for more than 5 seconds, as the pump could become damaged internally.

6. Fully close the shutoff valve. Record the highest pressures.
   - If the pressure recorded is within 9300–9800 kPa (1350–1420 psi), the pump is functioning within its specifications.
   - If the pressure recorded is higher than 9800 kPa (1420 psi), the valve in the pump is defective.
   - If the pressure recorded is lower than 9300 kPa (1350 psi), the valve or the rotating group in the pump is defective.
7. If the pump checks within specifications, leave the valve open and turn (or have someone else turn) the steering wheel fully in both directions. Record the highest pressures and compare with the maximum pump pressure recorded in step 6. If this pressure cannot be built in either (or one) side of the gear, the gear is leaking internally and must be disassembled and repaired.
8. Shut the engine off, remove the testing gage, reconnect the pressure hose, check the fluid level and make the needed repairs.
9. If the problem still exists, the steering and front suspension must be thoroughly examined.

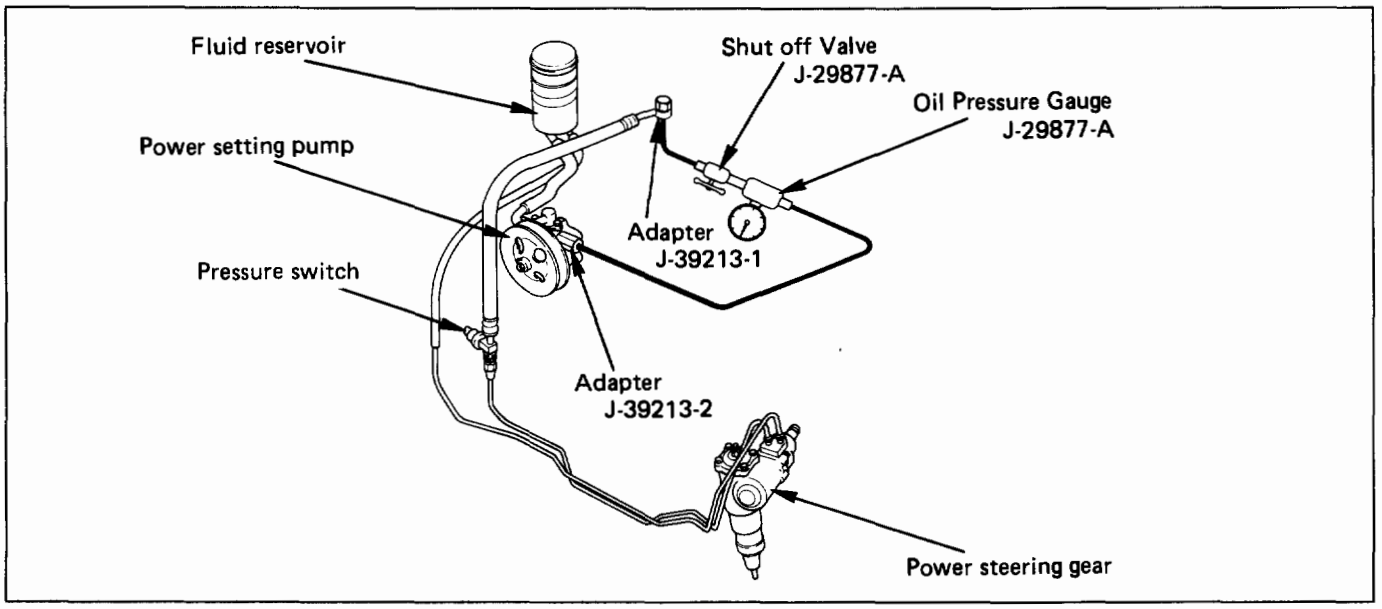

Fig. 3B1-3

ON-VEHICLE SERVICE

MAINTENANCE

The hydraulic system should be kept clean and fluid level in the reservoir should be checked at regular intervals and fluid added when required. Refer to "MAINTENANCE AND LUBRICATION" in section 0B of the manual for type of fluid to be used and intervals for filling.

If the system contains some dirt, flush it as detailed later in this section. If it is exceptionally dirty, both the pump and the gear must be completely disassembled before further usage.

All tubes, hoses, and fittings should be inspected for leakage at regular intervals. Fittings must be tight. Make sure the clips, clamps and supporting tubes and hoses are in place and properly secured.

Power steering hoses and lines must not be twisted, kinked or tightly bent. Air in the system will cause spongy action and noisy operation. When a hose is disconnected or when fluid is lost, for any reason, the system must be bled after refilling. Refer to "Bleeding the Power Steering System" in this section.

FLUID LEVEL

1. Run the engine until the power steering fluid reaches normal operating temperature, about 55°C (130°F), then shut the engine off.
2. Check the level of fluid in the reservoir.
3. If the fluid level is low, add power steering fluid as specified in "MAINTENANCE AND LUBRICATION" in Section 0B to the proper level and install the receiver cap.
4. When checking the fluid level after the steering system has been serviced, air must be bled from the system. Refer to "Bleeding the Power Steering System" in this section.

BLEEDING THE POWER STEERING SYSTEM

When a power steering pump or gear has been installed, or an oil line has been disconnected, the air that has entered the system must be bled out before the vehicle is operated. If air is allowed to remain in the power steering fluid system, noisy and unsatisfactory operation of the system may result.

BLEEDING PROCEDURE

When bleeding the system, and any time fluid is added to the power steering system, be sure to use only power steering fluid as specified in "MAINTENANCE AND LUBRICATION" in section 0B.

1. Fill the pump fluid reservoir to the proper level and let the fluid settle for at least two minutes.
2. Start the engine and let it run for a few seconds. Do not turn the steering wheel. Then turn the engine off.
3. Add fluid if necessary.
4. Repeat the above procedure until the fluid level remains constant after running the engine.
5. Raise the front end of the vehicle so that the wheels are off the ground.
6. Start the engine. Slowly turn the steering wheel right and left, lightly contacting the wheel stops.
7. Add power steering fluid if necessary.
8. Lower the vehicle and turn the steering wheel slowly from lock to lock.
9. Stop the engine. Check the fluid level and refill as required.
10. If the fluid is extremely foamy, allow the vehicle to stand a few minutes and repeat the above procedure.

INSPECT

- Belt for tightness.
- Pulley for looseness or damage. The pulley should not wobble with the engine running.
- Hoses so they are not touching any other parts of the vehicle.
- Fluid level and fill to the proper level.

FLUSHING THE POWER STEERING SYSTEM

1. Raise the front end of the vehicle off the ground until the wheels are free to turn.
2. Remove the fluid return line at the pump inlet connector and plug the connector port on the pump.
   Position the line toward a large container to catch the draining fluid.
3. While running the engine at idle, fill the reservoir with new power steering fluid. Turn the steering wheel in both directions. DO NOT contact wheel stops or hold the wheel in a corner, or fluid will stop and the pump will be in pressure relief mode. A sudden overflow from the reservoir may develop if the wheel is held at a stop.
4. Install all the lines and hoses. Fill the system with new power steering fluid and bleed the system as described in "Bleeding The Power Steering System". Operate the engine for about 15 minutes.
   Remove the pump return line at the pump inlet and plug the connection on the pump. While refilling the reservoir, check the draining fluid for contamination. If foreign material is still evident, replace all lines, disassemble and clean or replace the power steering system components. Do not re-use any drained power steering fluid.

STEERING WHEEL FREE PLAY ADJUSTMENT

INSPECTION (Fig. 3B1-4)

1. With the tires in the straight-ahead position, check the amount of steering wheel play by turning the wheel in both directions until the tires begin to move.

NOTE:
The wheel free play should be checked with the engine running.

Free play mm (in)	0 — 30 (0 — 1.18)

2. Also check the steering wheel for play and looseness in mount by moving it back and forth and sideways. While driving, check for hard steering, steering shimmy and tendency to pull to one side.

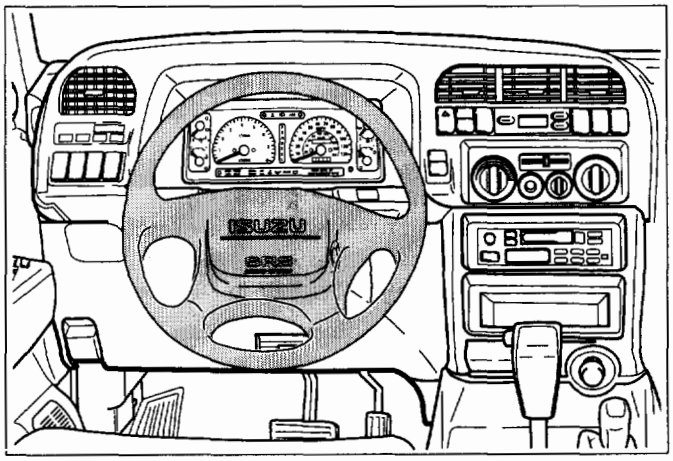

Fig. 3B1-4

ADJUSTMENT (Fig. 3B1-5)

1. Align the front wheels properly in the straight ahead position.
2. Loosen the lock nut on the adjusting screw of the steering gear.
3. Turn the adjust screw clockwise to decrease free play or counter-clockwise to increase.
4. After check of specified free play, tighten the lock nut to specified torque.

Torque N·m (lb·ft)	41 (30)

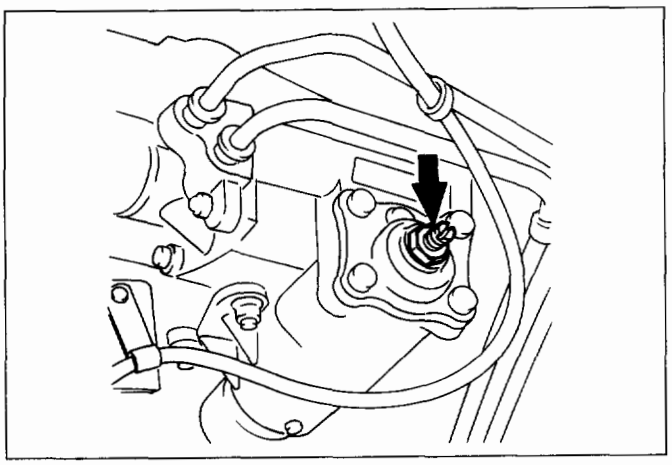

Fig. 3B1-5

STEERING GEAR

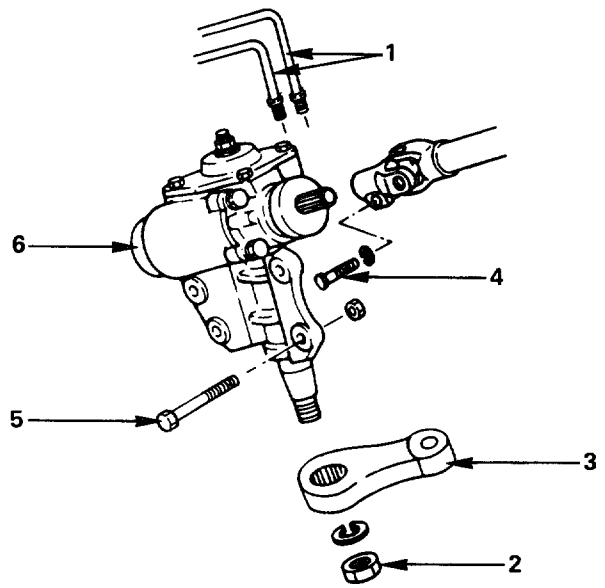

Removal steps
1. Pipe
2. Nut
3. Pitman arm
4. Coupling clamp bolt
5. Gear box mounting bolt and nut
6. Gear box

Installation steps
To install, follow the removal steps in the reverse order.

Fig. 3B1-6

REMOVAL

Preparation:
- Remove the stone guard.
- Remove the lower fan shroud. Refer to "Engine cooling" in section 6B1.
- Disconnect stabilizer bar at the stabilizer links. Loosen stabilizer bracket fixing nuts.

1. **Pipe**
2. **Nut**
3. **Pitman arm (Fig. 3B1-7)**
   Pitman arm remover: J-29107

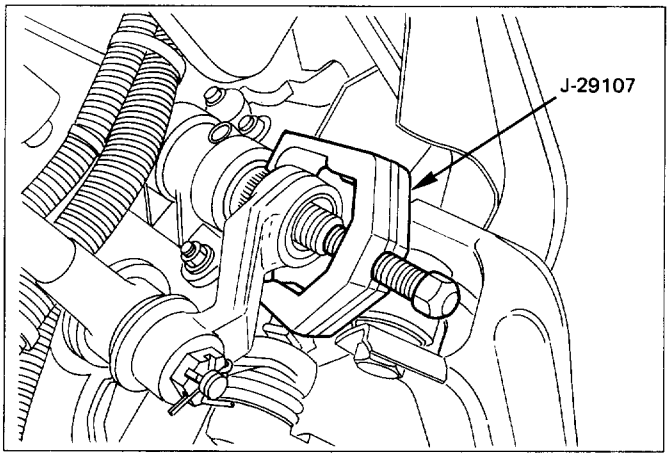

Fig. 3B1-7

4. **Coupling clamp bolt (Fig. 3B1-8)**
   - Make a setting mark across the coupling flange and worm shaft to ensure reassembly of the parts in the original position.

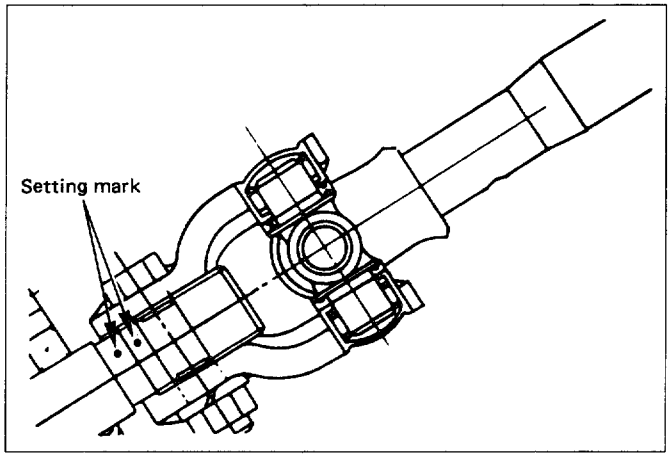

Fig. 3B1-8

5. **Gear box mounting bolt and nut**
   - Push the stabilizer bar aside and remove the bolts and nuts (Fig. 3B1-9).
6. **Gear box**

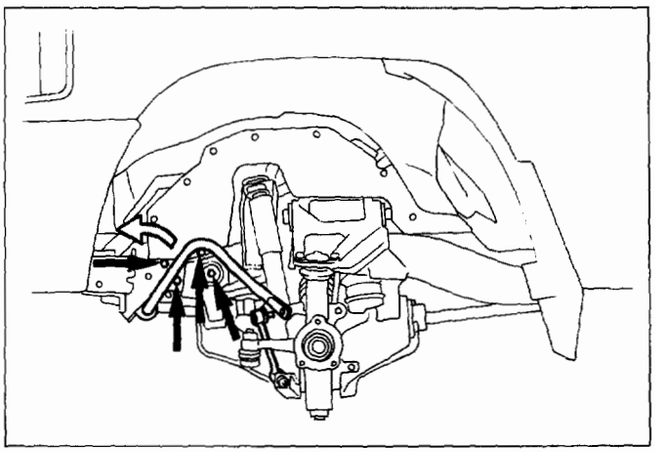

Fig. 3B1-9

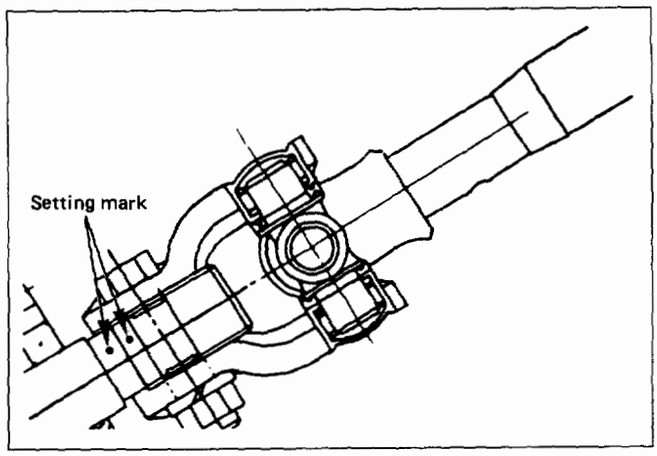

Fig. 3B1-10

INSTALLATION

6. Gear box (Fig. 3B1-10)

- Align the setting marks made at removal.

5. Gear box mounting bolt and nut

Torque N·m (lb·ft)	44 (33)

4. Coupling clamp bolt

Torque N·m (lb·ft)	25 (18)

3. Pitman arm (Fig. 3B1-11)

- Align the notched tooth.

2. Nut

Torque N·m (lb·ft)	216 (159)

1. Pipe

Torque N·m (lb·ft)	44 (33)

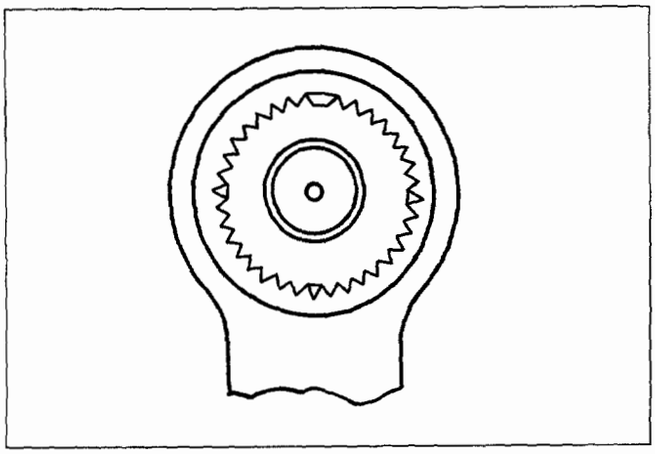

Fig. 3B1-11

POWER STEERING PUMP

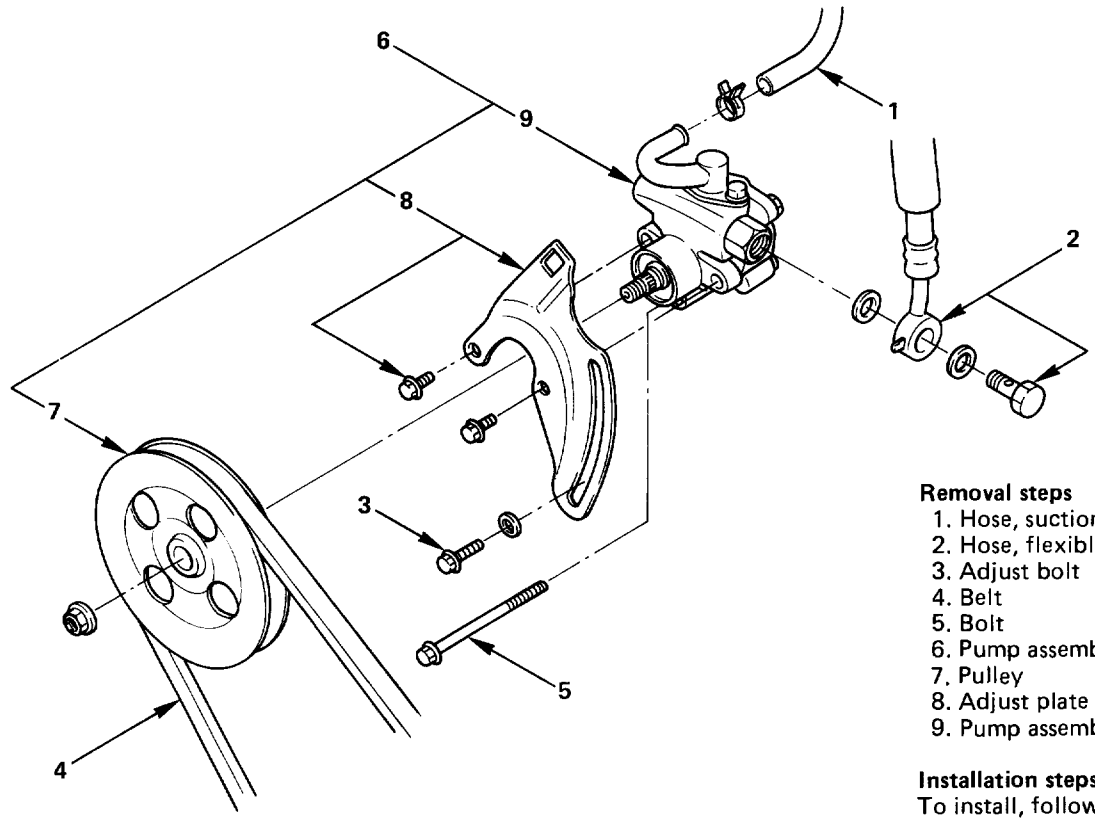

Removal steps
1. Hose, suction
2. Hose, flexible
3. Adjust bolt
4. Belt
5. Bolt
6. Pump assembly and pulley
7. Pulley
8. Adjust plate
9. Pump assembly

Installation steps
To install, follow the removal steps in the reverse order.

Fig. 3B1-12

REMOVAL

Preparation: • Place a drain pan below the pump.

1. **Hose, suction**
2. **Hose, flexible**
3. **Adjust bolt**
4. **Belt**
5. **Bolt**
6. **Pump assembly and pulley**
7. **Pulley**
8. **Adjust plate**
9. **Pump assembly**

INSTALLATION

9. **Pump assembly**
8. **Adjust plate**

Torque N·m (lb·ft)	56 (41)

7. **Pulley**

Torque N·m (lb·ft)	78 (58)

6. **Pump assembly and pulley**
5. **Bolt**

Torque N·m (lb·ft)	46 (34)

4. **Belt**
3. **Adjust bolt**
   • After adjusting drive belt tension, tighten bolt to specified torque.

Torque N·m (lb·ft)	46 (34)

2. **Hose, flexible**

Torque N·m (lb·ft)	54 (40)

1. **Hose, suction**
   • Fill and bleed the system. Refer to "Bleeding the Power Steering System" in this section.

UNIT REPAIR

STEERING GEAR

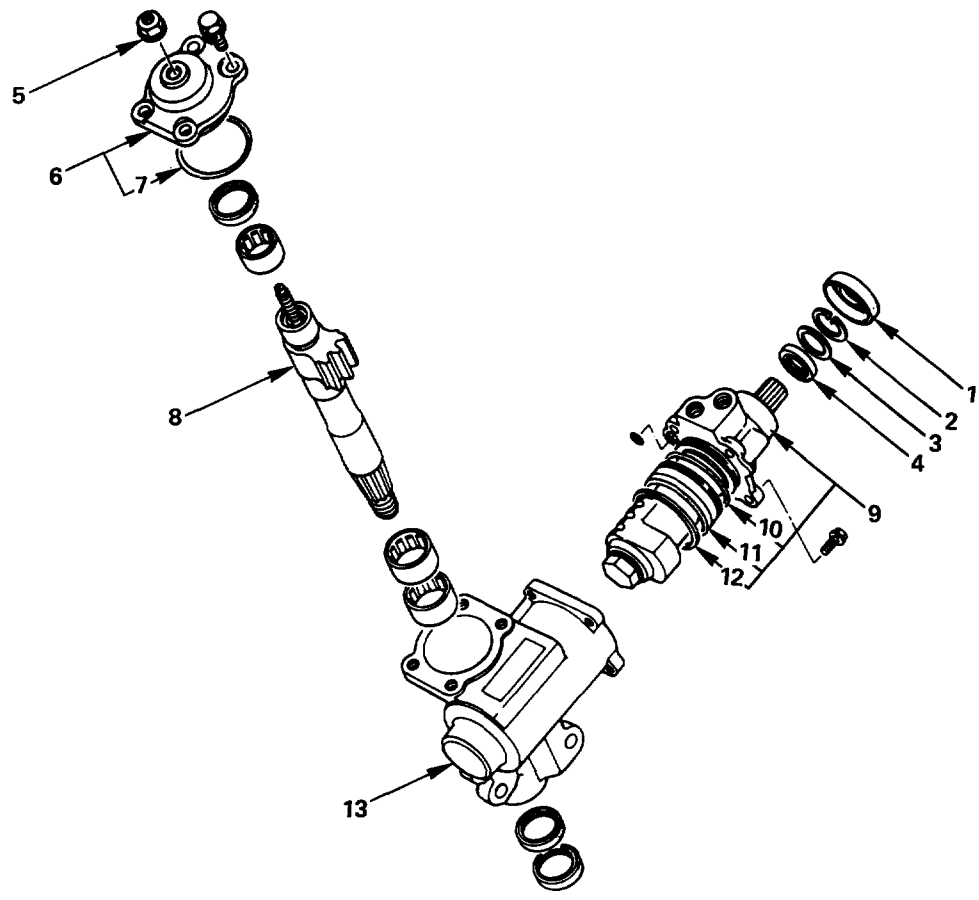

Disassembly steps
1. Dust cover
2. Retaining ring
3. Back up ring
4. Oil seal
5. Lock nut
6. Top cover assembly
7. O-ring
8. Sector shaft
9. Ball-nut and valve housing assembly
10. O-ring
11. Seal ring
12. O-ring
13. Gear box

Reassembly steps
To reassemble, follow the disassembly steps in the reverse order.

Fig. 3B1-13

DISASSEMBLY

CAUTION:
Do not clamp the steering gear assembly in a vise by the power cylinder housing.

1. **Dust cover**
2. **Retaining ring**
3. **Back up ring**
4. **Oil seal**
   1) Clean the faces of the extended stub shaft.
   2) Plug the hose fitting on the inlet side.
   3) Remove the oil seal by blowing compressed air through the hole in the outlet side (Fig. 3B1-14).

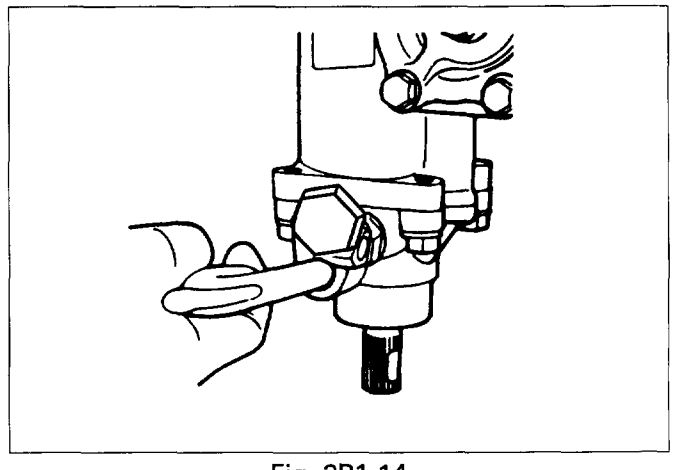

Fig. 3B1-14

5. **Lock nut**
   - Remove the adjusting screw lock nut and turn the adjusting screw counter-clockwise to remove the preload between the sector gear and the rack piston, then remove the top cover bolts.
6. **Top cover assembly (Fig. 3B1-15)**
   - Holding the top cover stationary, turn the adjusting screw clockwise to raise and free to cover, then remove the cover.

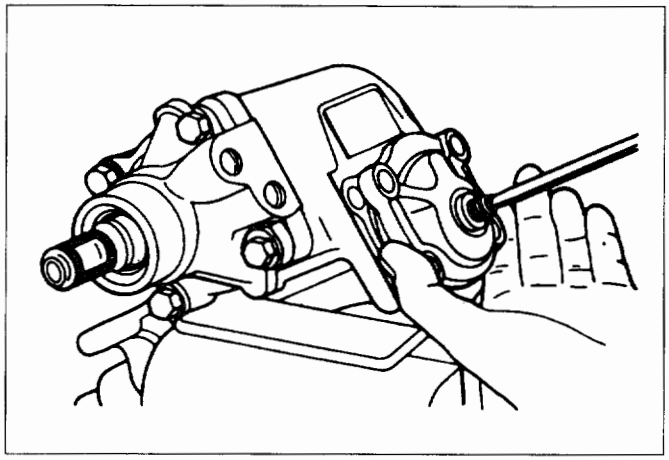

Fig. 3B1-15

7. **O-ring**
8. **Sector shaft (Fig. 3B1-16)**
   - Bring the stub shaft into straight-ahead position. Do not force the sector shaft off the gear box with a hammer or other impact tools.
9. **Ball-nut and valve housing assembly (Fig. 3B1-17)**
   - It is strongly advisable to always keep the ball nut and valve housing assembly in a horizontal position, or the rack piston will fall off onto the end of the worm, causing the rack piston to slip out of the worm shaft and the balls to fall out.
10. **O-ring**
11. **Seal ring**
12. **O-ring**
13. **Gear box**

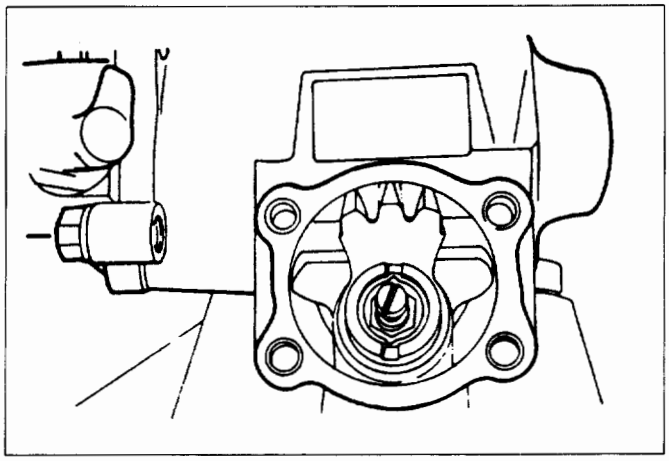

Fig. 3B1-16

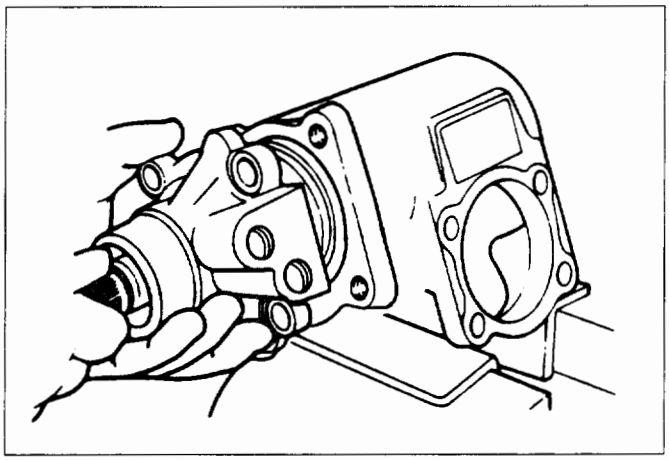

Fig. 3B1-17

INSPECTION AND REPAIR

Inspect the following parts for wear, damage or any other abnormal conditions.

- Bearing
- Ball-nut and valve housing
- Sector shaft
- Top cover
- Gear box
- Needle bearing
- Dust seal
- Seal ring
- Gasket

Ball-nut rotation (Fig. 3B1-18)

Hold the ball nut and valve housing assembly vertically and see if the ball-nut lowers by turning smoothly. If the ball-nut does not lower smoothly, check the worm shaft for bending and foreign matter.

NOTE:
When testing the ball nut and valve housing assembly, do not let it travel all the way to the end of worm shaft, or damage to the ball tubes will result.

- Check sector shaft outside diameter (Fig. 3B1-19).

Limit	mm (in)	31.7 (1.25)

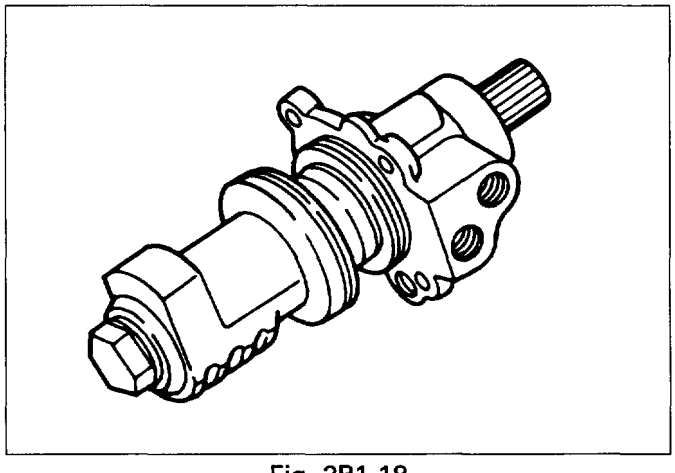

Fig. 3B1-18

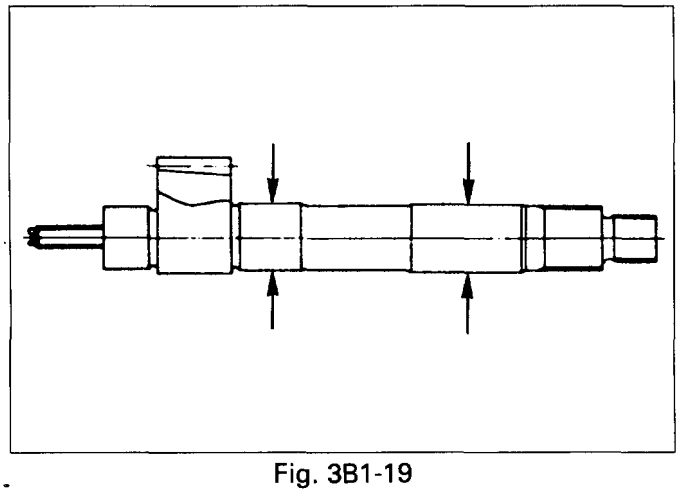

Fig. 3B1-19

Seal ring setting (Fig. 3B1-20)

- Note the setting direction. Always install a new part.
- Apply a thin coat of power steering fluid to lip of each part.

Dust seal setting (Fig. 3B1-20)

- Note the setting direction. Always install a new part.
- Apply a thin coat of power steering fluid to lip of each part.

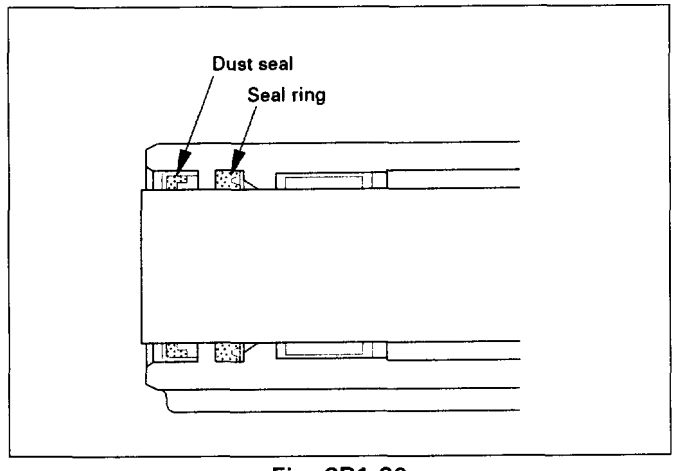

Fig. 3B1-20

Gasket setting (Fig. 3B1-21)

- Note the setting direction.
- Apply a thin coat of power steering fluid to lip of each part.

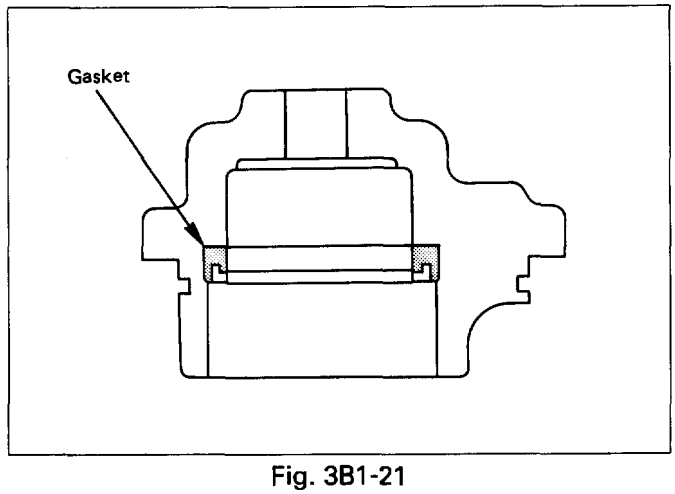

Fig. 3B1-21

REASSEMBLY

13. Gear box

12. O-ring (Fig. 3B1-22)

- Apply a thin coat of power steering fluid.
- Be sure to discard used part, and always use new part for installation.

11. Seal ring (Fig. 3B1-22)

- Apply a thin coat of power steering fluid.
- Be sure to discard used part, and always use new part for installation.

10. O-ring (Fig. 3B1-22)

- Apply a thin coat of power steering fluid.
- Be sure to discard used part, and always use new part for installation.

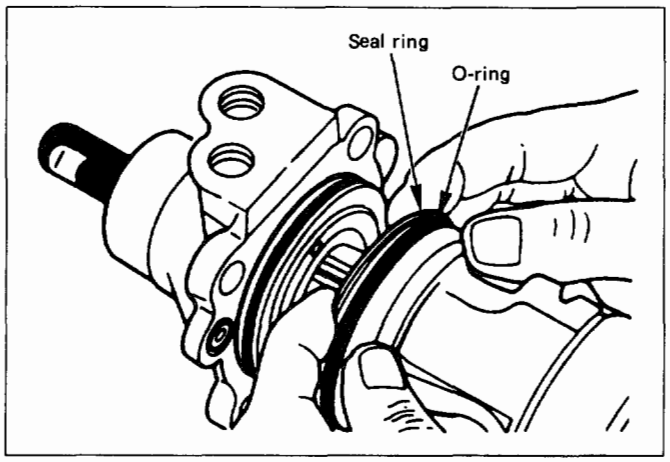

Fig. 3B1-22

9. Ball-nut and valve housing assembly

1) It is strongly advisable to always keep the ball screw and valve housing assembly in a horizontal position (avoid holding it vertically), or the rack piston will fall off onto the end of the worm, causing the rack piston to slip out of the worm shaft and ball to fall out (Fig. 3B1-23).
2) Be careful not to drop the O-ring into the valve housing.
3) Tighten the valve housing retaining bolts to the specified torque.

Torque	N·m (lb·ft)	47 (35)

8. Sector shaft

1) Tape the sector shaft serrations to protect the seal ring from damage.
2) Align the center tooth of ball nut with that of the sector shaft (Fig. 3B1-24).

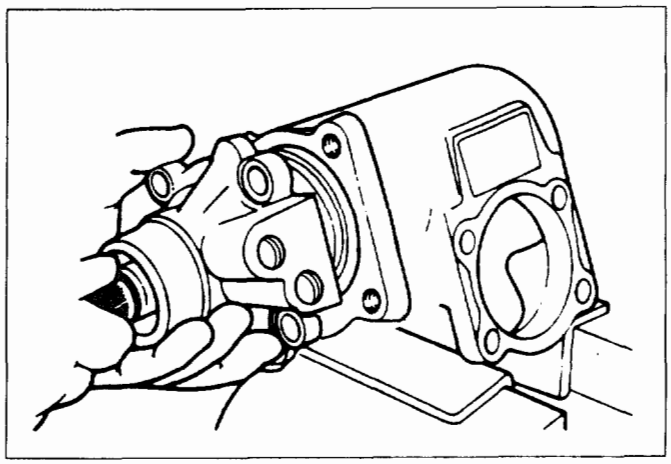

Fig. 3B1-23

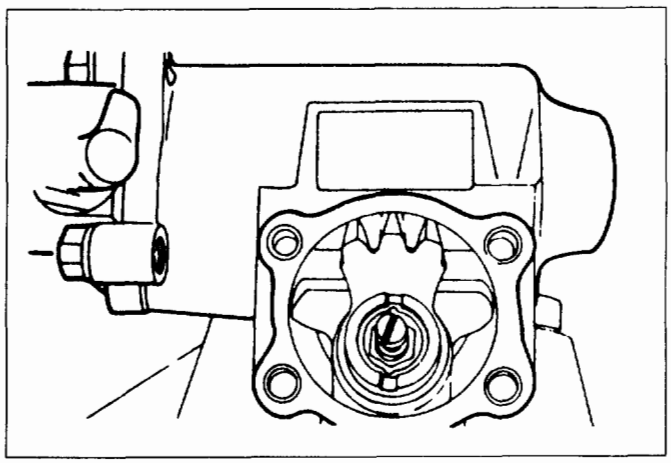

Fig. 3B1-24

7. O-ring

6. Top cover assembly

Torque	N·m (lb·ft)	47 (35)

5. Lock nut

Adjust the backlash between the worm gear and the ball nut (Fig. 3B1-25).

1) With the worm gear rotating, set it to the straight ahead position.
2) Set the worm shaft preload to below 10kg·cm with the sector shaft adjusting screw.
3) Measure the worm shaft preload with the worm gear turned 450° both to the right and to the left.
   The worm gear preload in these positions should be 2-4kg·cm lower than in the straight ahead position.
4) Lock the sector shaft adjusting screw with the lock nut.

Lock nut torque	N·m (lb·ft)	41 (30)

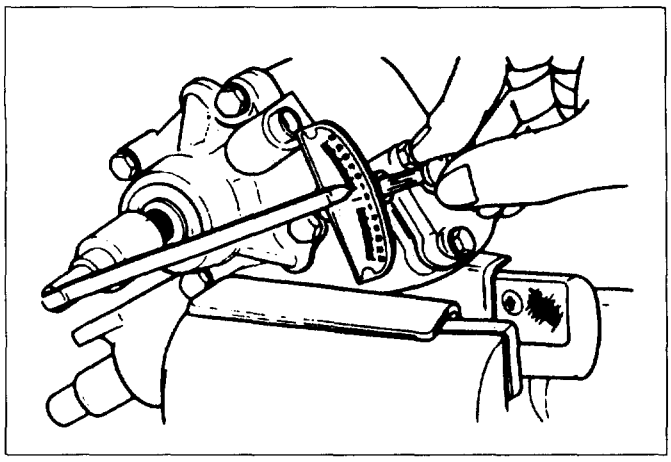

Fig. 3B1-25

4. **Oil seal (Fig. 3B1-26)**
   - Apply a thin coat of power steering fluid to lip of each part.

   Installer: J-26508

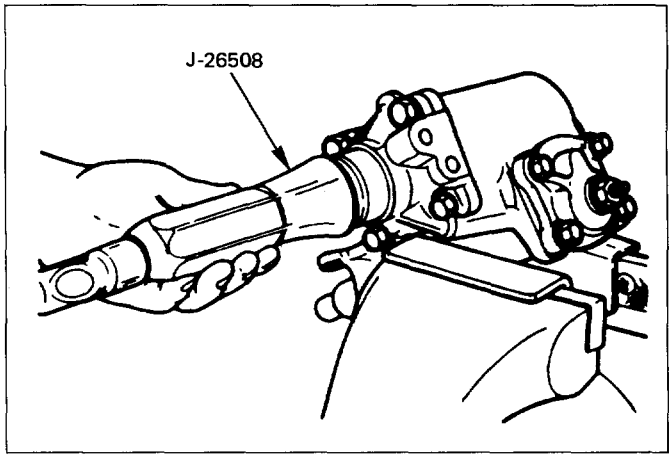

Fig. 3B1-26

3. **Back up ring**
   - Position the chamfered face (outer circumference) towards the oil seal.
2. **Retaining ring**
   - Position the chamfered face (outer circumference) towards the oil seal.
1. **Dust cover**

POWER STEERING PUMP

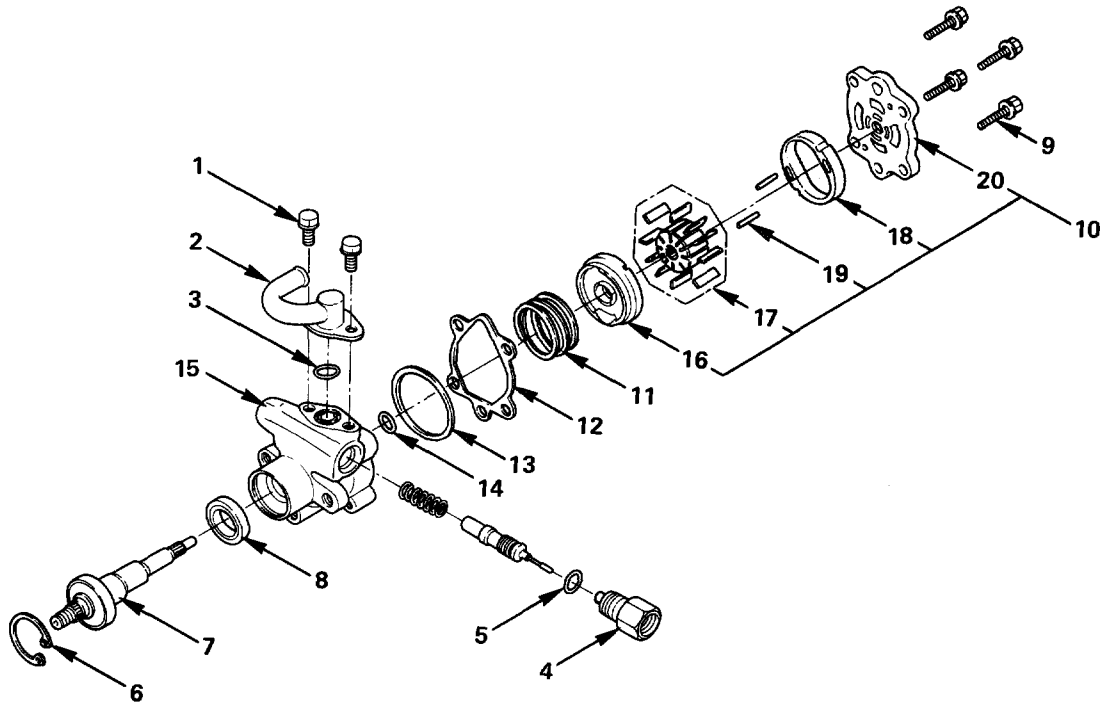

Desassembly steps

1. Bolt
2. Pipe, suction
3. O-ring
4. Connector
5. O-ring
6. Retaining ring
7. Shaft assembly
8. Oil seal
9. Bolt
10. Rear housing assembly and pump cartridge
11. Spring
12. Gasket
13. O-ring
14. O-ring
15. Front housing
16. Side plate
17. Rotor and vane
18. Cam
19. Pin
20. Rear housing

Reassembly steps
To reassemble, follow the disassembly steps in the reverse order.

Fig. 3B1-27

DISASSEMBLY

Preparation: • Clean oil pump with solvent (plug its discharge and suction port to prevent the entry of solvent). Be careful not to expose the oil seal of shaft assembly to solvent.

1. **Bolt**
2. **Pipe, suction**
3. **O-ring**
4. **Connector**
5. **O-ring**
6. **Retaining ring**
7. **Shaft assembly**
8. **Oil seal**

CAUTION:
When removing the oil seal, be careful not to damage the housing.

9. **Bolt**
10. **Rear housing assembly and pump cartridge**
11. **Spring**
12. **Gasket**
13. **O-ring**
14. **O-ring**
15. **Front housing**
16. **Side plate**
17. **Rotor and vane**
18. **Cam**
19. **Pin**
20. **Rear housing**

INSPECTION AND REPAIR

Make all necessary adjustments, repairs, and part replacements if wear, damage, or other problems are discovered during inspection.

Rotor (Fig. 3B1-28)

Check that the groove in the vane is free from excessive wear and that the vane slides smoothly.
When part replacement becomes necessary, the pump cartridge should be replaced as a subassembly.

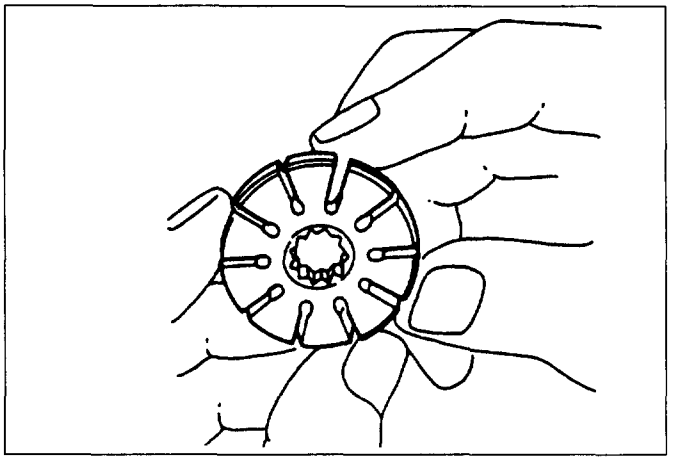

Fig. 3B1-28

Vane (Fig. 3B1-29)

Sliding faces of the vane should be free from wear. (Particularly the curved face at the tip in contact with the cam should be free from wear and distortion).
When part replacement becomes necessary, the pump cartridge should be replaced as a subassembly.

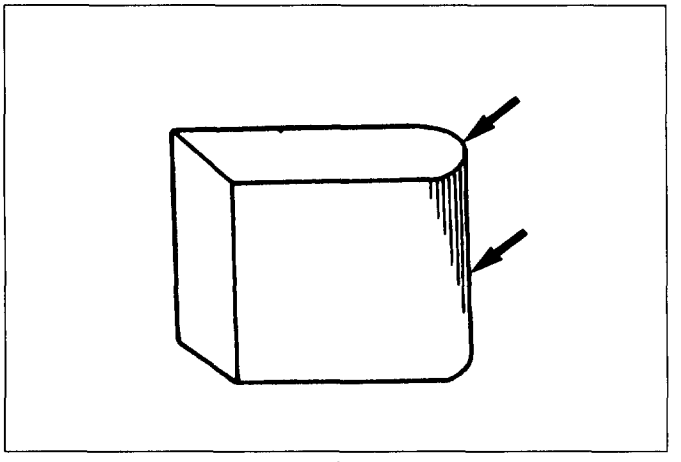

Fig. 3B1-29

Cam

The inner face of the arm should have a trace of uniform contact without a sign of step wear.
When part replacement becomes necessary, the pump cartridge should be replaced as a subassembly.

Side plate

The sliding faces of parts must be free from step wear (more than 0.01 mm), which can be felt by the finger nail.
The parts with minor scores may be reused after lapping the face.

Valve

The sliding face of the valve must be free from burrs and damage.
The parts with minor scores may be reused after smoothing with emery cloth (#800 or finer).

Shaft

Oil seal sliding faces must be free from a step wear which can be felt by the finger nail.
Needle bearing fitting face must be free from disintegration and wear.

O-ring, oil seal, retaining ring

Be sure to discard used parts, and always use new parts for installation. Prior to installation, lubricate all seals and rings with power steering fluid.

REASSEMBLY

20. Rear housing

19. Pin

18. Cam

17. Rotor and vane

- Install the rotor with punch mark facing the front housing (Fig. 3B1-30).
- Install the vanes with curved face in contact with the inner wall of the cam (Fig. 3B1-31).

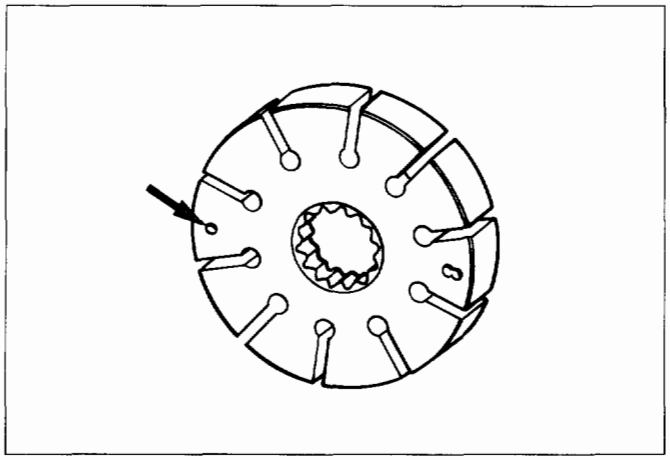

Fig. 3B1-30

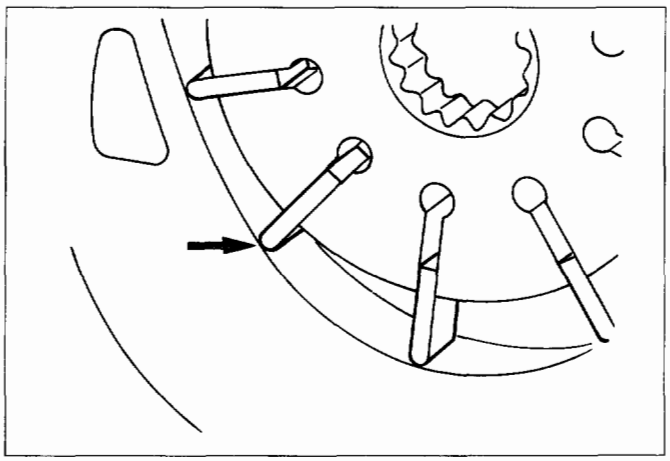

Fig. 3B1-31

16. Side plate

CAUTION:
When installing side plate, be careful not to damage its inner surface. Damaged side plate may cause poor pump performance, pump seizure or oil leakage.

15. Front housing

14. O-ring
- Be sure to discard used parts, and always use new parts for installation.

13. O-ring
- Be sure to discard used parts, and always use new parts for installation.

12. Gasket
- Be sure to discard used parts, and always use new parts for installation.

11. Spring

10. Rear housing and pump cartridge

9. Bolt

Torque N·m (lb·ft)	37 (27)

8. Oil seal

CAUTION:
When installing the oil seal, be careful not to damage the oil seal contacting surface of the housing.
- Be sure to discard used parts, and always use new parts for installation.

7. Shaft assembly

6. Retaining ring

5. O-ring
- Be sure to discard used parts, and always use new parts for installation.

4. Connector

Torque N·m (lb·ft)	74 (54)

3. O-ring
- Be sure to discard used parts, and always use new parts for installation.

2. Pipe, suction

1. Bolt

Torque N·m (lb·ft)	16 (12)

MAIN DATA AND SPECIFICATIONS

GENERAL SPECIFICATIONS

Steering unit	
Type	Integral, ball screw
Gear ratio	15.8 : 1
Oil pump	
Type	Vane
Operating fluid	ATF DEXRON®-III

TORQUE SPECIFICATIONS

N·m (lb·ft)

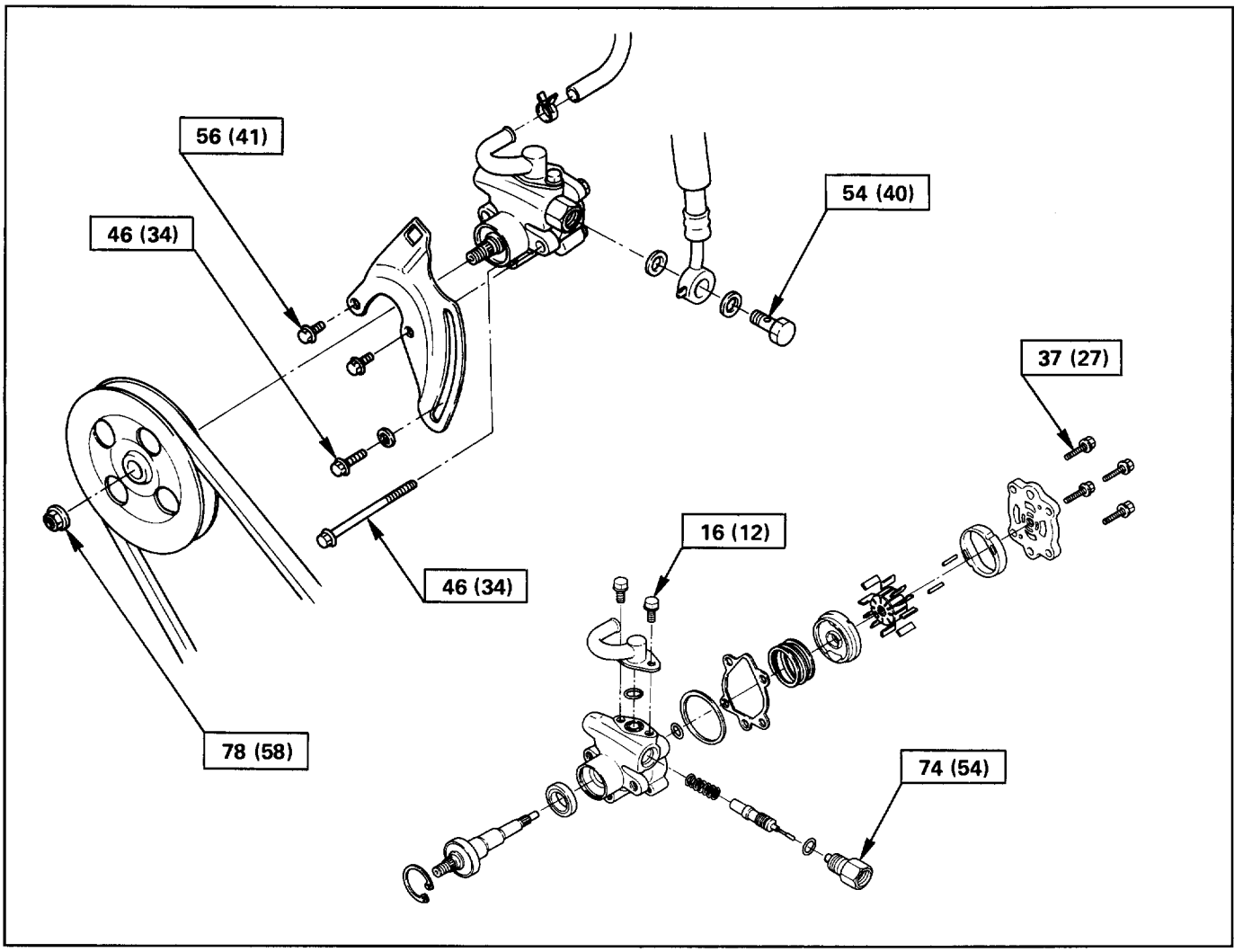

Fig. 3B1-32

TORQUE SPECIFICATIONS (Cont'd)

N·m (lb·ft)

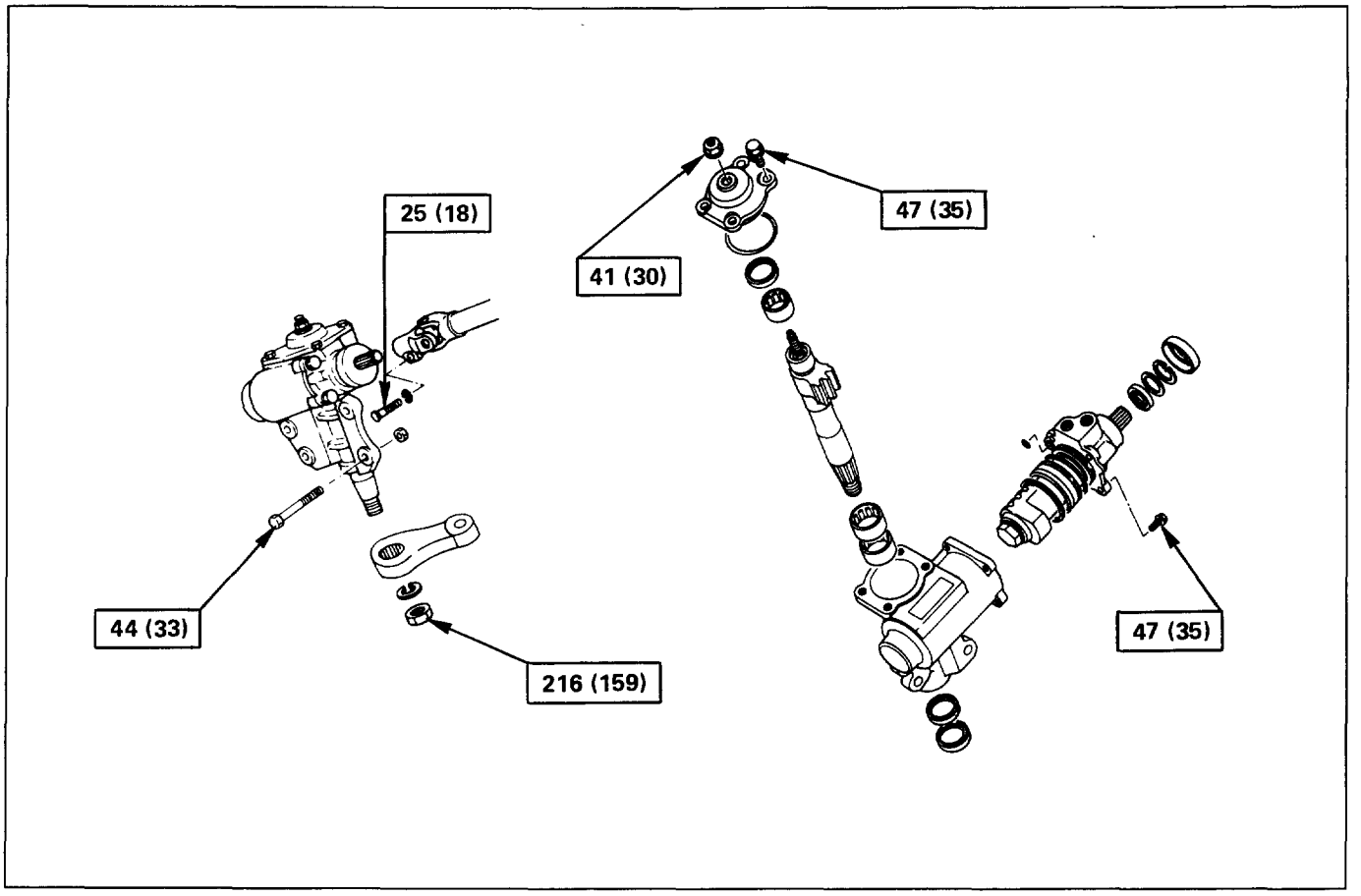

Fig. 3B1-33

SPECIAL TOOLS

ILLUSTRATION	TOOL NO. TOOL NAME
	J-29877-A Tester: Power steering
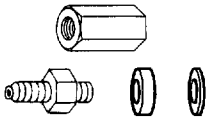	**J-39213** Adapter: Power steering tester
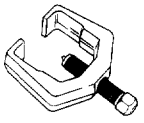	**J-29107** Remover: Pitman arm

ILLUSTRATION	TOOL NO. TOOL NAME
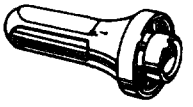	**J-26508** Installer; Extension housing oil seal

SECTION 3B3

STEERING LINKAGE

CAUTION:
When fasteners are removed, always reinstall them at the same location from which they were removed. If a fastener needs to be replaced, use the correct part number fastener for that application. If the correct part number fastener is not available, a fastener of equal size and strength (or stronger) may be used. Fasteners that are not reused, and those requiring thread locking compound, will be called out. The correct torque value must be used when installing fasteners that require it. If the above conditions are not followed, parts or system damage could result.

CONTENTS

General Description **3B3-1**
On-Vehicle Service **3B3-2**
Center Track Rod Assembly **3B3-2**
Outer Track Rod Assembly **3B3-4**
Relay Lever **3B3-6**
Main Data and Specifications **3B3-8**
Torque Specifications **3B3-8**
Special Tools **3B3-8**

GENERAL DESCRIPTION

The steering linkage consists of a pitman arm, relay lever, center track rod and two adjustable outer track rods.
When the steering wheel is turned, the gear rotates the pitman arm which forces the center track rod to one side. The outer track rods, connected to the center track rod by ball studs, transfer the steering force to the wheels. The outer track rods are adjustable and are used for toe-in adjustments. The center track rod is supported by the pitman arm and relay lever. The relay lever pivots on a support attached to the frame.
The overall condition of the steering linkage affects steering performance. If parts are bent, damaged, worn or poorly lubricated, improper and possibly dangerous steering action will result.
Whenever any steering linkage components are replied or replaced, check the steering geometry and front end alignment. Refer to Front End Alignment (Sec. 3A).

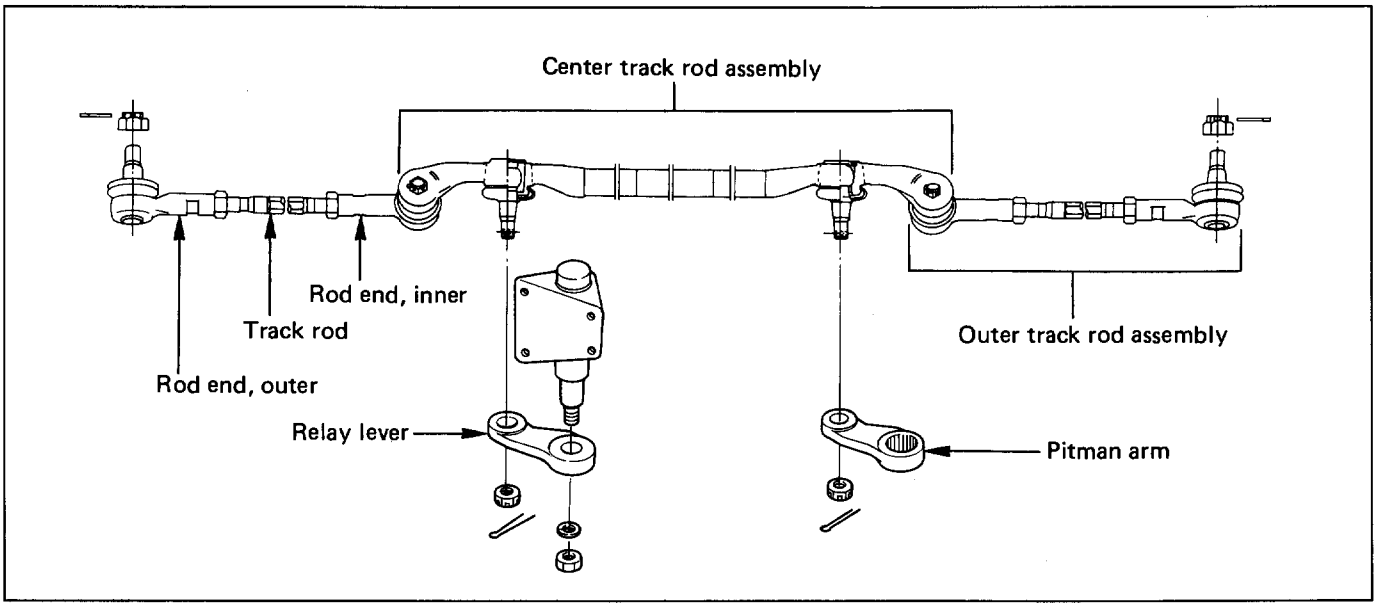

Fig. 3B3-1

ON-VEHICLE SERVICE

CENTER TRACK ROD ASSEMBLY

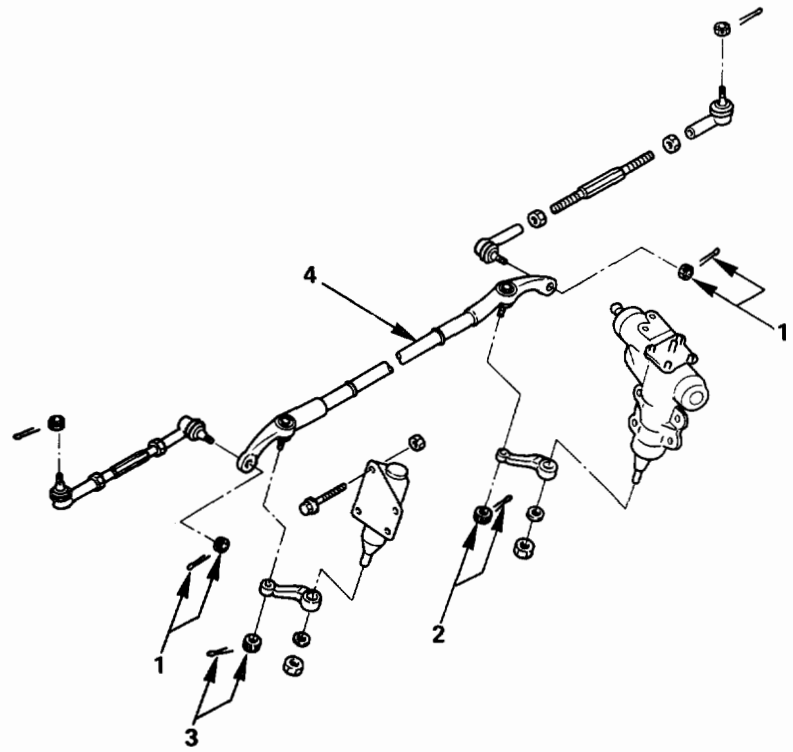

Removal stpe
1. Nut and cotter pin
2. Nut and cotter pin, pitman arm
3. Nut and cotter pin, relay lever
4. Center track rod assembly

Installation steps
To install, follow the removal steps in the reverse order.

Fig. 3B3-2

REMOVAL

Preparation: • Raise the vehicle and support the frame with suitable safety stands.

1. **Nut and cotter pin**
   - Disconnect outer track rod assembly from the center track rod (Fig. 3B3-3).

Remover: J-36831

CAUTION:
Be careful not to break the ball joint boot.

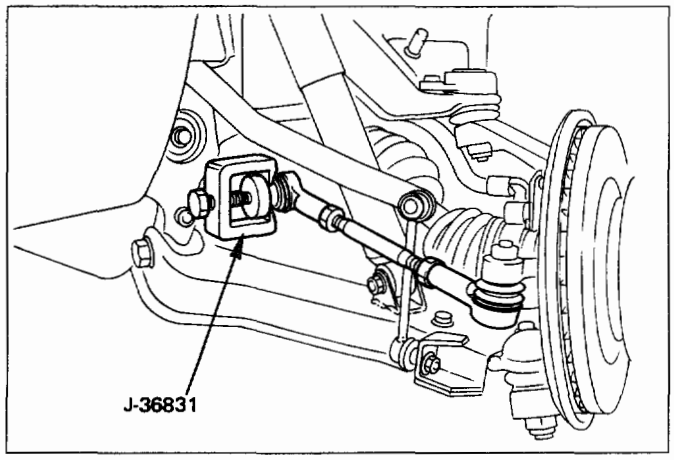

Fig. 3B3-3

2. **Nut and cotter pin, pitman arm**
   - Remove pitman arm from the center track rod (Fig. 3B3-4).

Remover: J-36831

CAUTION:
Be careful not to break the ball joint boot.

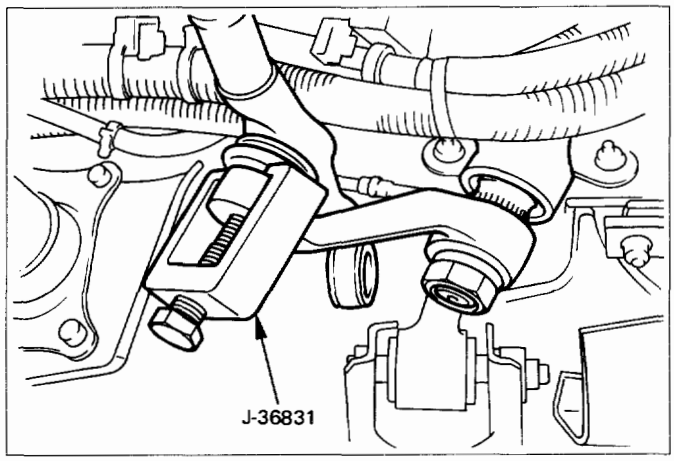

Fig. 3B3-4

3. **Nut and cotter pin, relay lever**
   - Remove relay lever from the center track rod (Fig. 3B3-5).

Remover: J-36831

CAUTION:
Be careful not to break the ball joint boot.

4. **Center track rod assembly**

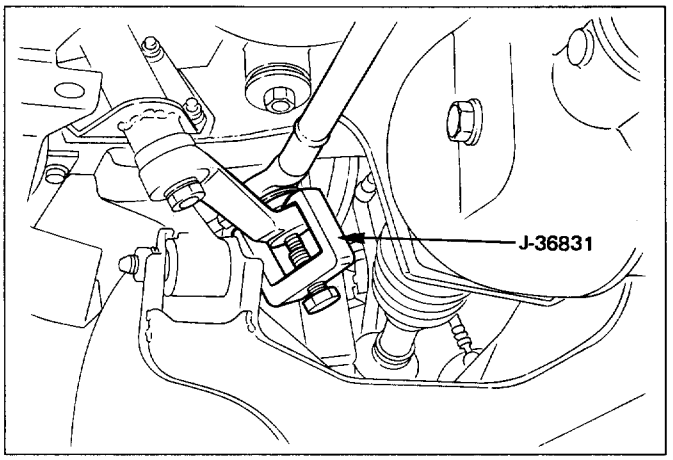

Fig. 3B3-5

INSPECTION AND REPAIR

Make necessary correction or parts replacement if wear, damage, corrosion, bending, deteriorations or any other abnormal condition are found through inspection.
Check the following parts.
- Ball joint (Boot, screws and tapered surfaces)

INSTALLATION

4. **Center track rod assembly**
3. **Nut and cotter pin, relay lever**
   - Tighten the nut to the specified torque, with just enough additional torque to align cotter pin holes. Install new cotter pin.

Torque N·m (lb·ft)	59 (43)

2. **Nut and cotter pin, pitman arm**
   - Tighten the nut to the specified torque, with just enough additional torque to align cotter pin holes. Install new cotter pin.

Torque N·m (lb·ft)	98 (72)

1. **Nut and cotter pins**
   - Tighten the nut to the specified torque, with just enough additional torque to align cotter pin holes. Install new cotter pin.

Torque N·m (lb·ft)	98 (72)

OUTER TRACK ROD ASSEMBLY

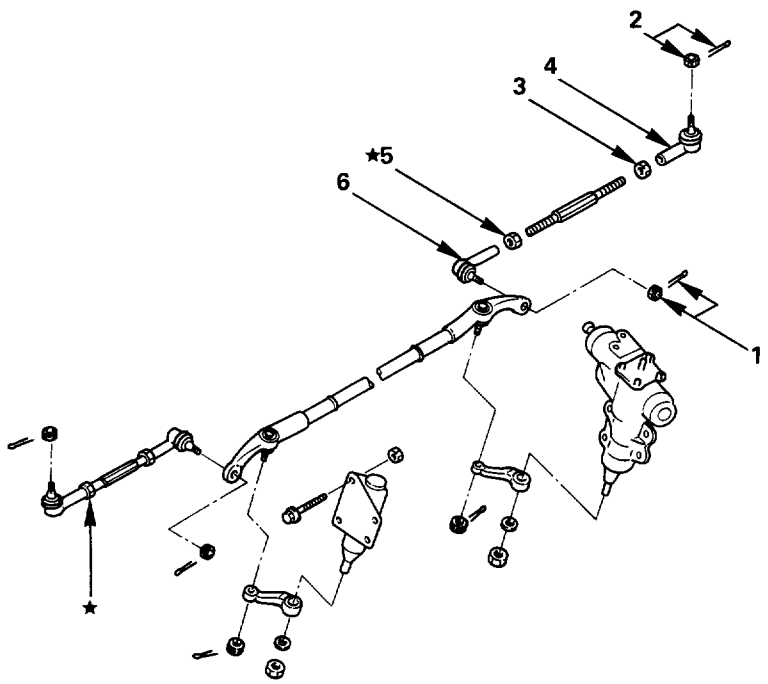

Removal steps
1. Nut and cotter pin, center track rod
2. Nut and cotter pin, knuckle arm
3. Lock nut, outer
4. Rod end assembly, outer
5. Lock nut, inner
6. Rod end assembly, inner

Installation steps
To install, follow the removal steps in the reverse order.

★ The screw is threaded counterclockwise.

Fig. 3B3-6

REMOVAL

Preparation: • Remove wheel and tire assembly. Refer to "Wheels and tires" in section 3E.

1. **Nut and cotter pin, center track rod**
   - Disconnect outer track rod assembly at the center track rod (Fig. 3B3-7).

Remover: J-36831

CAUTION:
Be careful not to break the ball joint boot.

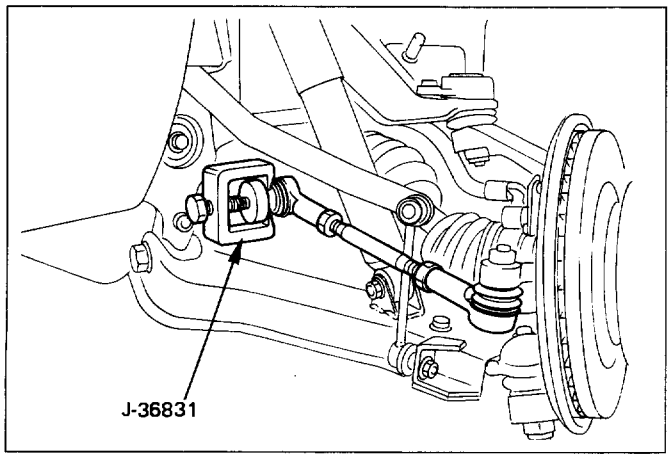

Fig. 3B3-7

2. **Nut and cotter pin, knuckle arm**
   - Remove outer track rod assembly from the knuckle arm (Fig. 3B3-8).

Remover: J-36831

CAUTION:
Be careful not to break the ball joint boot.

3. **Lock nut, outer**

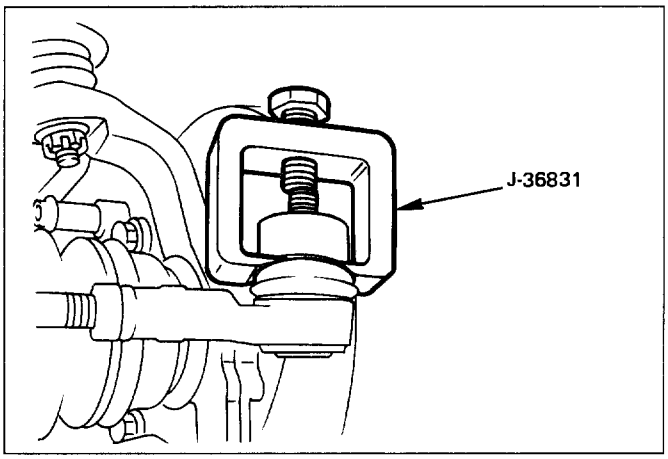

Fig. 3B3-8

4. **Rod end assembly, outer (Fig. 3B3-9)**
   - Apply setting marks to ensure reassembly of the parts in their original position.

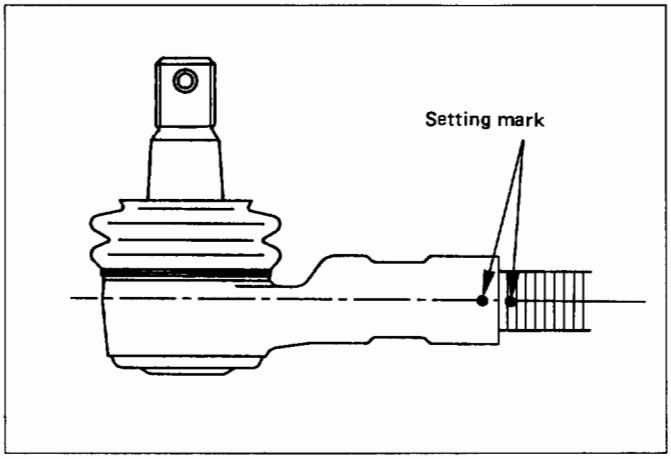

Fig. 3B3-9

5. **Lock nut, inner**
   NOTE:
   In either outer rod, the screw on the right side of the vehicle is threaded counterclockwise.
6. **Rod end, inner (Fig. 3B3-10)**
   - Apply setting marks to ensure reassembly of the parts in their original position.

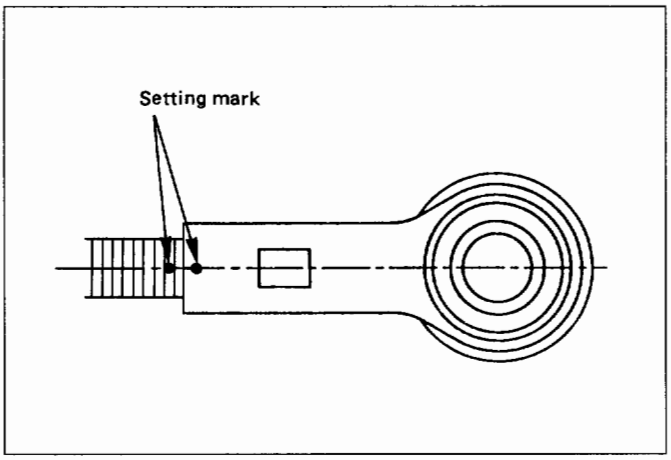

Fig. 3B3-10

INSPECTION AND REPAIR

Make necessary correction or parts replacement if wear, damage, corrosion, bending, deteriorations or any other abnormal condition are found through inspection.
Check the following parts.
- Rod end assembly
- Ball joint (Boot, screws and tapered surfaces)

INSTALLATION

6. **Rod end, inner**
   - Align the setting marks applied during disassembly.
5. **Lock nut, inner**

Torque N·m (lb·ft)	118 (87)

NOTE:
In either outer rod, the screw on the right side of the vehicle is threaded counterclockwise.

4. **Rod end assembly, outer**
   - Align the setting marks applied during disassembly.
3. **Lock nut, outer**

Torque N·m (lb·ft)	118 (87)

2. **Nut and cotter pin, knuckle arm**
   - Tighten the nut to the specified torque, with just enough additional torque to align cotter pin holes. Install new cotter pin.

Torque N·m (lb·ft)	98 (72)

1. **Nut and cotter pin, center track rod**
   - Tighten the nut to the specified torque, with just enough additional torque to align cotter pin holes. Install new cotter pin.

Torque N·m (lb·ft)	98 (72)

NOTE:
If replacing the track rod, adjust the new track rod length (Fig. 3B3-11).

Rod length mm (in)	328.3 (12.93)

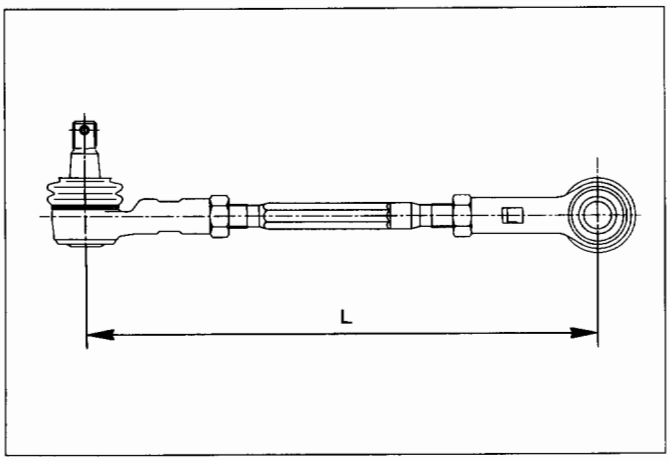

Fig. 3B3-11

NOTE:
Adjust the toe-in. Refer to "Front End Alignment" in section 3A.

RELAY LEVER

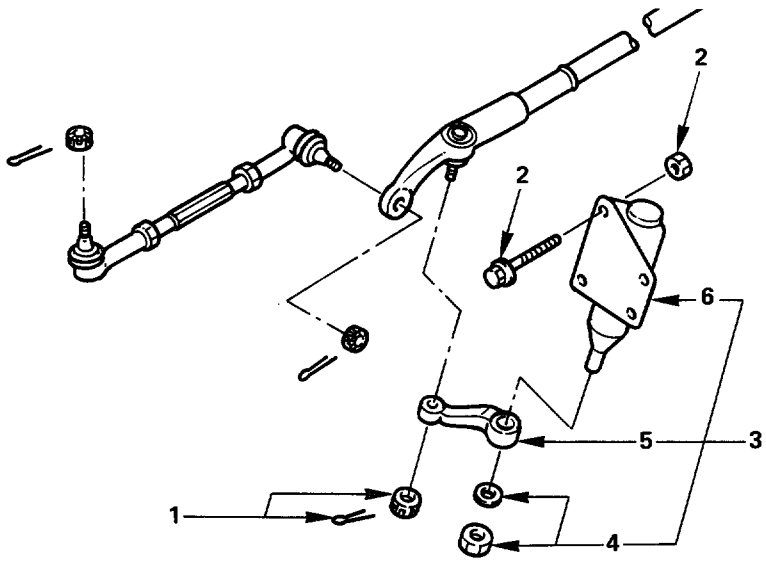

Removal steps
1. Nut and cotter pin
2. Bolt and nut
3. Relay lever and bracket
4. Nut and washer
5. Relay lever
6. Bracket

Installation steps
To install, follow the removal steps in the reverse order.

Fig. 3B3-12

REMOVAL

Preparation: • Raise the vehicle and support the frame with suitable safety stands.

1. **Nut and cotter pin**
   - Disconnect relay lever at the center track rod (Fig. 3B3-13).

Remover: J-36831

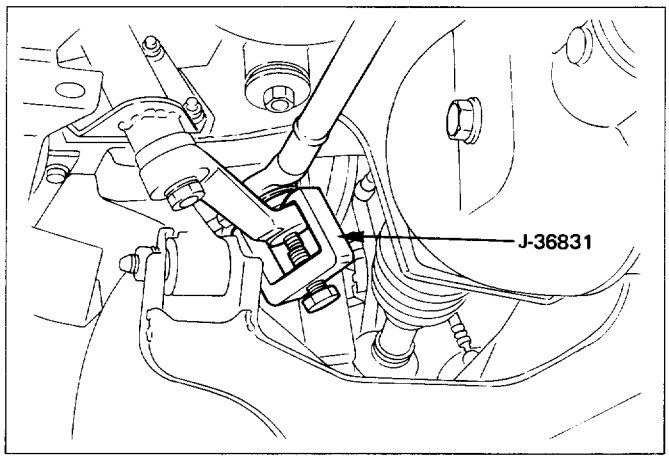

Fig. 3B3-13

2. **Bolt and nut**
   - Push the stabilizer bar aside and remove the bolts and nuts (Fig. 3B3-14).
3. **Relay lever and bracket**
4. **Nut and washer**

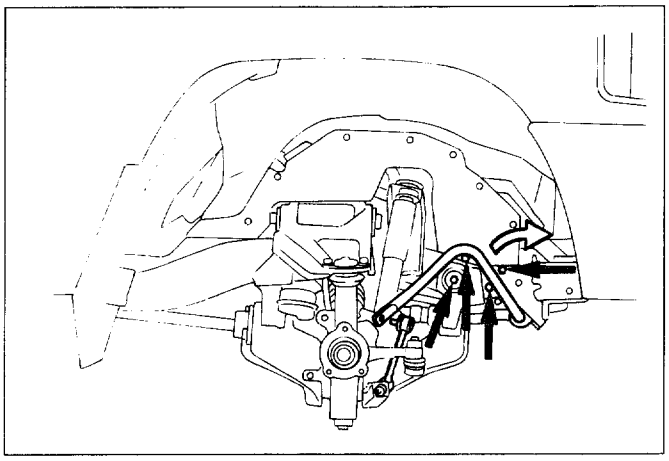

Fig. 3B3-14

5. **Relay lever**
   - Remove relay lever from the bracket (Fig. 3B3-15).

Remover: J-22912-01

6. **Bracket**

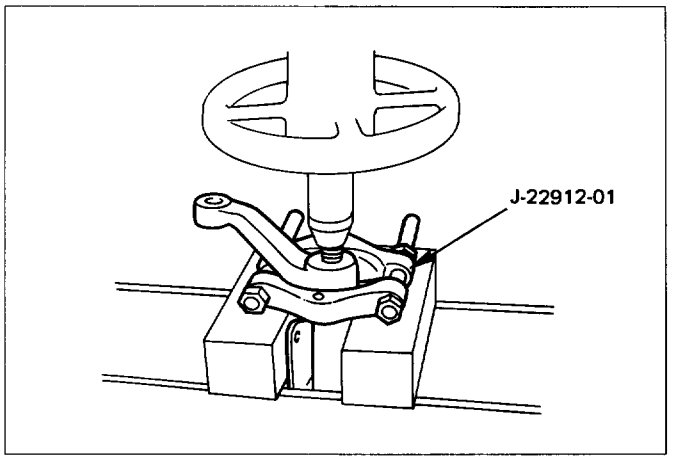

Fig. 3B3-15

INSTALLATION

6. **Bracket**
5. **Relay lever**
4. **Nut and washer**

Torque N·m (lb·ft)	118 (87)

3. **Relay lever and bracket**
2. **Bolt and nut**

Torque N·m (lb·ft)	44 (33)

1. **Nut and cotter pin**
   - Tighten the nut to the specified torque, with just enough additional torque to align cotter pin holes. Install new cotter pin.

Torque N·m (lb·ft)	59 (43)

MAIN DATA AND SPECIFICATIONS

TORQUE SPECIFICATIONS

N·m (lb·ft)

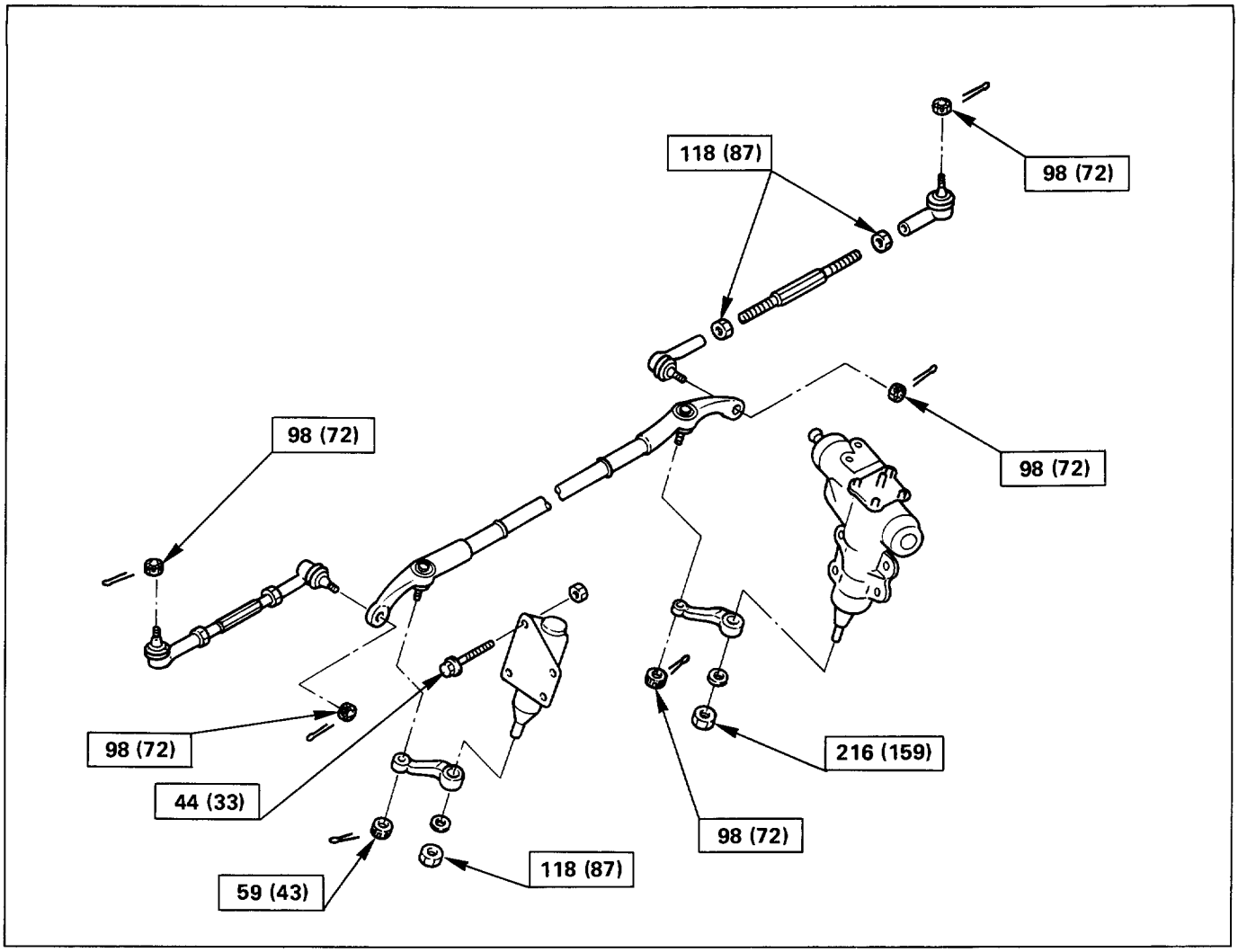

Fig. 3B3-16

SPECIAL TOOLS

ILLUSTRATION	TOOL NO. TOOL NAME
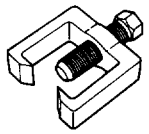	**J-36831** Tie rod end remover

ILLUSTRATION	TOOL NO. TOOL NAME
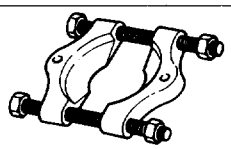	**J-22912-01** Relay lever remover

SECTION 3C

FRONT SUSPENSION

CAUTION:
When fasteners are removed, always reinstall them at the same location from which they were removed. If a fastener needs to be replaced, use the correct part number fastener for that application. If the correct part number fastener is not available, a fastener of equal size and strength (or stronger) may be used. Fasteners that are not reused, and those requiring thread locking compound, will be called out. The correct torque value must be used when installing fasteners that require it. If the above conditions are not followed, parts or system damage could result.
Refer to section 3A in this manual for the wheel alignment procedure.

CONTENTS

General Description 3C- 1
On-Vehicle Service 3C- 3
Shock Absorber 3C- 3
Stabilizer Bar 3C- 4
Torsion Bar 3C- 5
Knuckle 3C- 7
Upper Control Arm 3C- 10
Lower Control Arm 3C- 13
Upper Ball Joint 3C- 16
Lower Ball Joint 3C- 18
Main Data and Specifications 3C- 20
General Specifications 3C- 20
Torque Specifications 3C- 21
Special Tools 3C- 22

GENERAL DESCRIPTION

The front suspension is designed to allow each wheel to compensate for changes in the road surface level without greatly affecting the opposite wheel. Each wheel is independently connected to the frame by a steering knuckle, ball joint assemblies, and upper and lower control arms. The front wheels are held in proper relationship to each other by two outer track rods which are connected to steering arms on the knuckles and to a center track rod.
All models have a front suspension system consisting of control arms, stabilizer bar, shock absorber and a torsion bar. The front end of the torsion bar is attached to the lower control arm. The rear of the torsion bar is mounted into a height control arm at the crossmember. Vehicle trim height is controlled by adjusting this arm.
Shock absorbers are mounted between the brackets on the frame and the lower control arms. The lower portion of each shock absorber is attached to the lower control arm by a bolt and nut. The upper portion of each shock absorber extends through a frame bracket and is secured with two rubber bushings, three retainers and a nut.
Ball joint assemblies are bolted to the outer end of the upper and lower control arm and are attached to the steering knuckle by nuts and cotter pins.
The inner ends of the upper control arm have pressed in bushings. Bolts, passing through the bushing, attach the control arm to the frame. The inner ends of the lower control arm are attached to the frame by bolts passing through the bushings, which are pressed in the frame.
Side roll of the front suspension is controlled by a spring steel stabilizer bar. It is mounted in rubber bushings, which are held to the crossmember by brackets. The ends of the stabilizer bar are connected to the lower control arms by links.

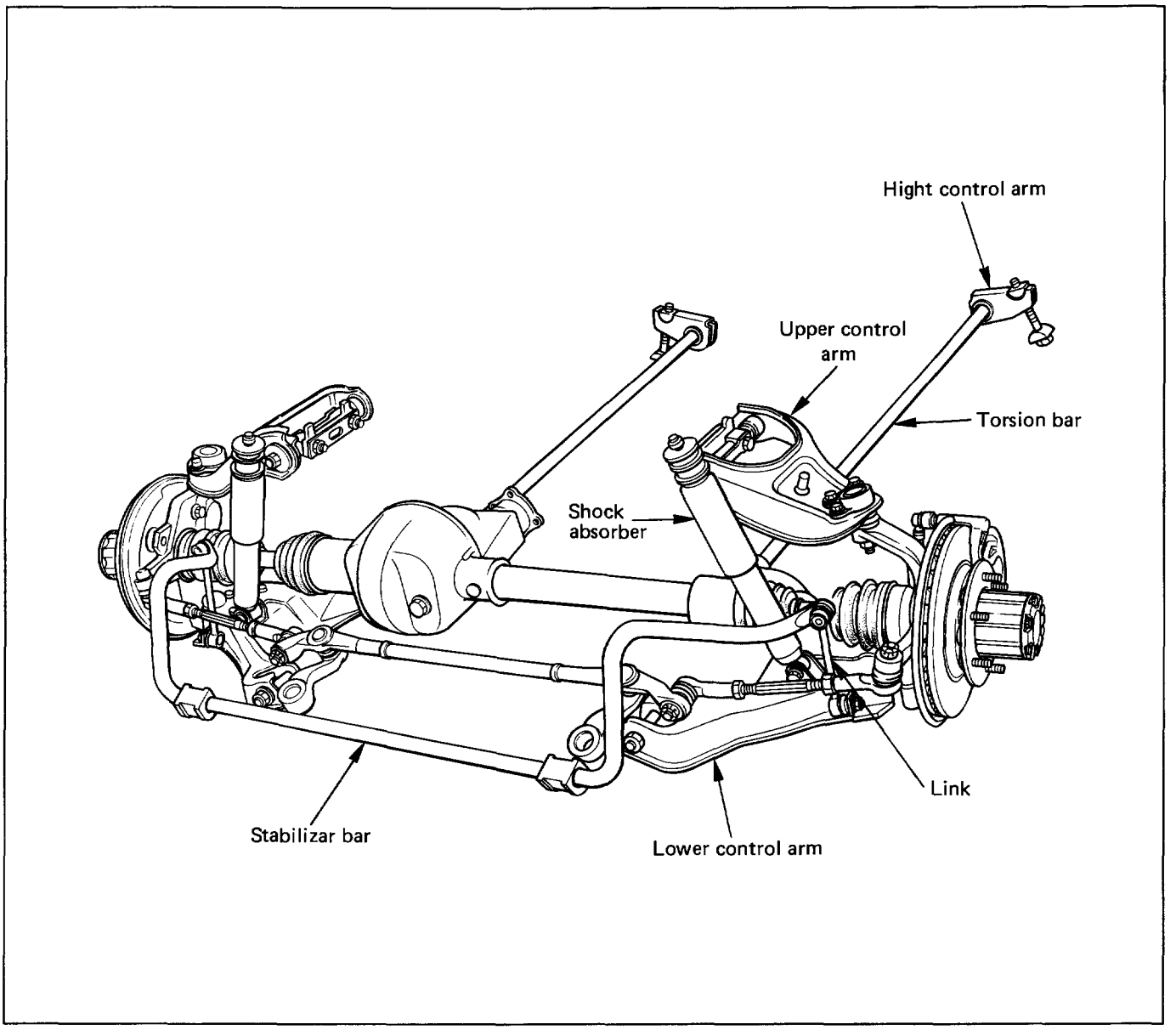
Hight control arm
Upper control arm
Torsion bar
Shock absorber
Link
Stabilizar bar
Lower control arm

Fig. 3C-1

ON-VEHICLE SERVICE

SHOCK ABSORBER

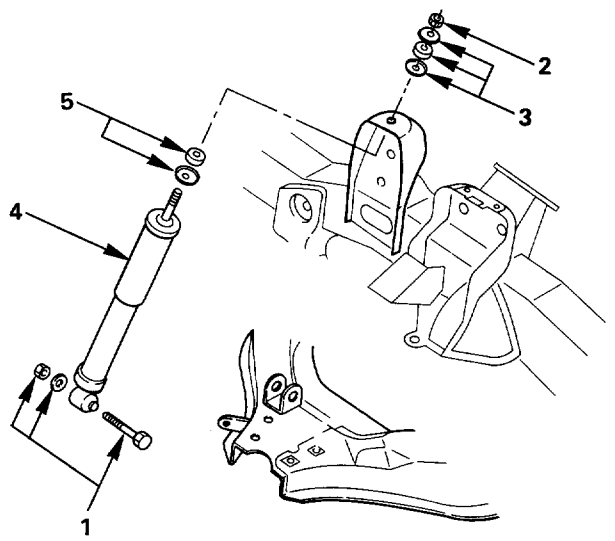

Removal steps
1. Bolt, nut and washer
2. Nut
3. Rubber bushing and washer
4. Shock absober
5. Rubber bushing and washer

Installation steps
To install, follow the removal steps in the reverse order.

Fig. 3C-2

REMOVAL

Preparation:
- Raise the vehicle and support it with suitable safety stands.
- Remove wheel and tire assembly. Refer to "Wheels and Tires" in section 3E.

1. **Bolt, nut and washer**
2. **Nut**
3. **Rubber bushing and washer**
4. **Shock absorber**
5. **Rubber bushing and washer**

INSPECTION AND REPAIR

Make necessary correction or parts replacement if wear, damage, corrosion or any other abnormal condition are found through inspection.
- Shock absorber
- Rubber bushing

INSTALLATION

5. **Rubber bushing and washer**
4. **Shock absorber**
3. **Rubber bushing and washer**
2. **Nut**

Torque	N·m (lb·ft)	20 (14)

1. **Bolt, nut and washer**

Torque	N·m (lb·ft)	82 (61)

STABILIZER BAR

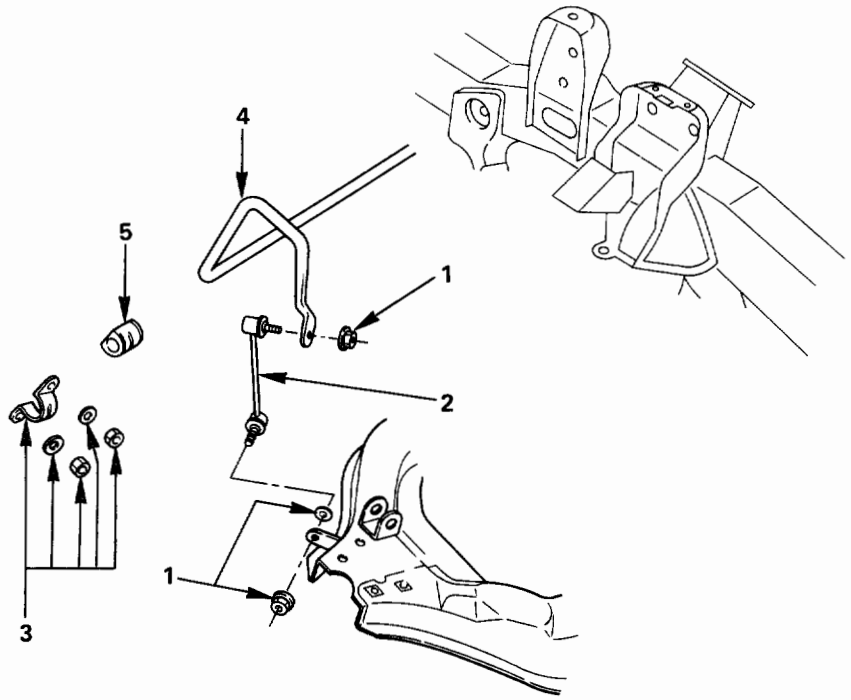

Removal steps
1. Nut and washer
2. Link
3. Bracket
4. Stabilizer bar
5. Rubber bushing

Installation steps
To install, follow the removal steps in the reverse order.

Fig. 3C-3

REMOVAL

Preparation:
- Raise the vehicle and support the frame with suitable safety stands.
- Remove the stone guard.
- Remove wheel and tire assembly. Refer to "Wheels and Tires" in section 3E.

1. Nut and washer

CAUTION:
Be careful not to break the ball joint boot.

2. Link

3. Bracket

4. Stabilizer bar

5. Rubber bushing

INSPECTION AND REPAIR

Make necessary correction or parts replacement if wear, damage, corrosion or any other abnormal condition are found through inspection.
- Stabilizer bar
- Rubber bushing
- Link ball joint

INSTALLATION

5. Rubber bushing

4. Stabilizer bar

3. Bracket

Torque N·m (lb·ft)	22 (16)

2. Link

1. Nut and washer

Torque N·m (lb·ft)	50 (37)

TORSION BAR

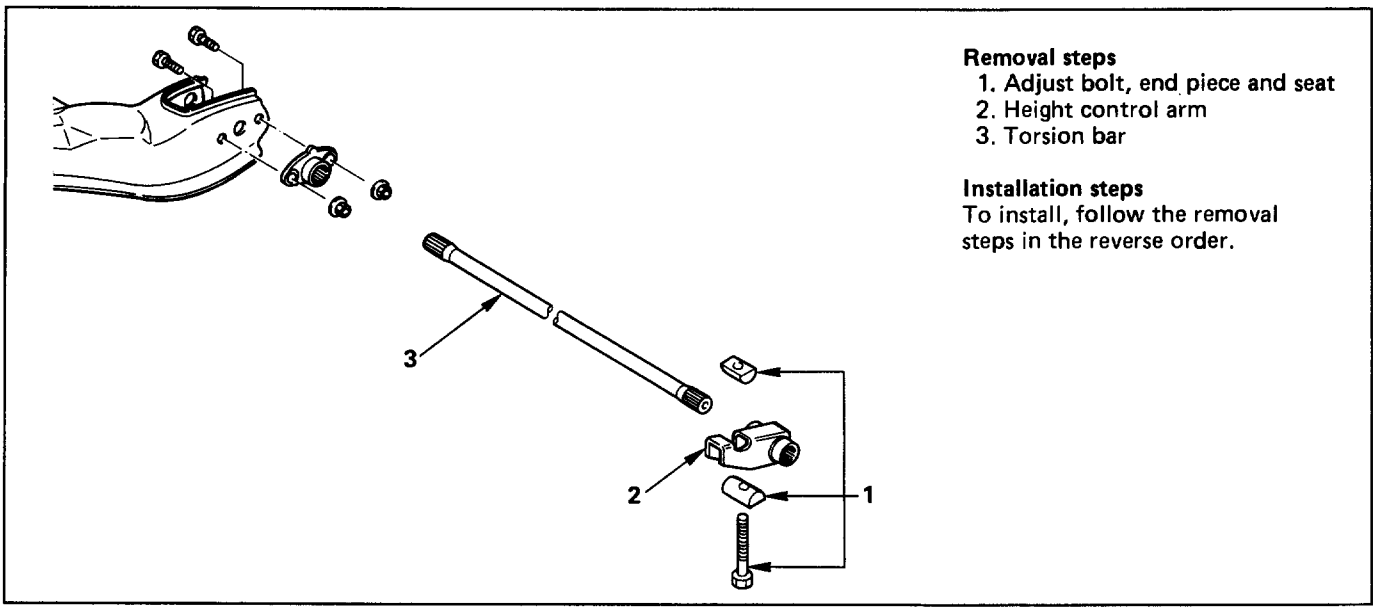

Removal steps
1. Adjust bolt, end piece and seat
2. Height control arm
3. Torsion bar

Installation steps
To install, follow the removal steps in the reverse order.

Fig. 3C-4

REMOVAL

Preparation: • Raise the vehicle and support the frame with suitable safety stands.

1. **Adjust bolt, end piece and seat (Fig. 3C-5)**
   - Apply the setting marks to the adjust bolt and end piece.

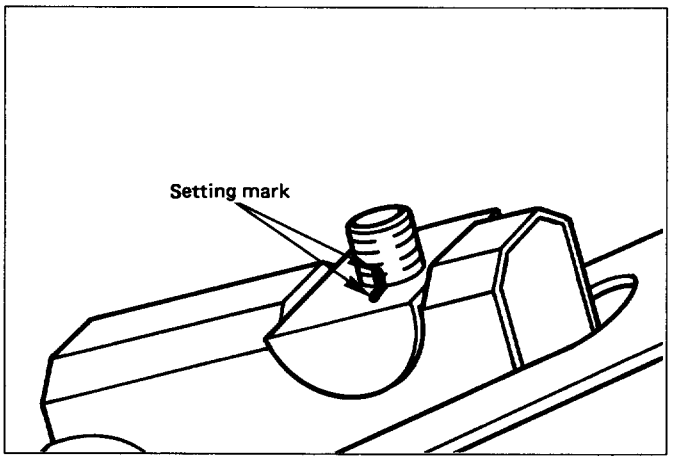

Fig. 3C-5

2. **Height control arm (Fig. 3C-6)**
   - Apply the setting marks to the height control arm and torsion bar.
3. **Torsion bar (Fig. 3C-7)**
   - Apply the setting marks to the torsion bar and lower control arm.

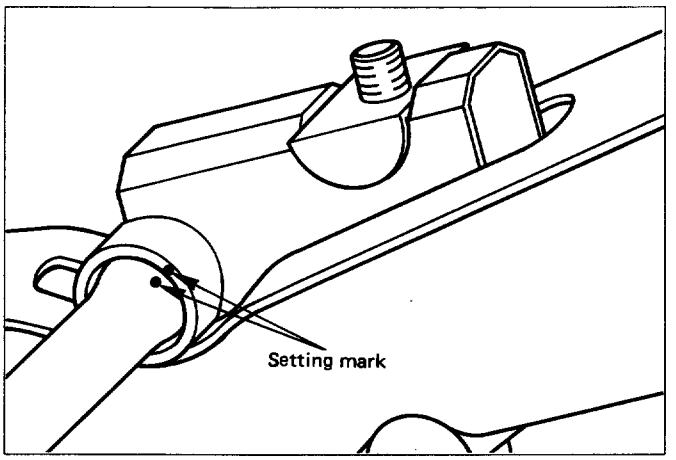

Fig. 3C-6

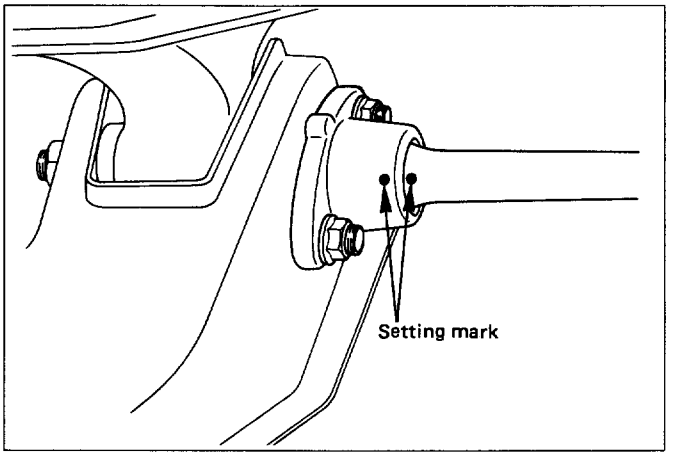

Fig. 3C-7

INSPECTION AND REPAIR

Make necessary correction or parts replacement if wear, damage, corrosion or any other abnormal condition are found through inspection.

Check the following parts:

- Torsion bar
- Height control arm
- Adjust bolt
- Rubber seat

INSTALLATION

3. Torsion bar

- Make sure the bars are on their correct respective sides (Fig. 3C-8).
- Apply grease to the serrated portions.
- Align the setting marks (Fig. 3C-9).

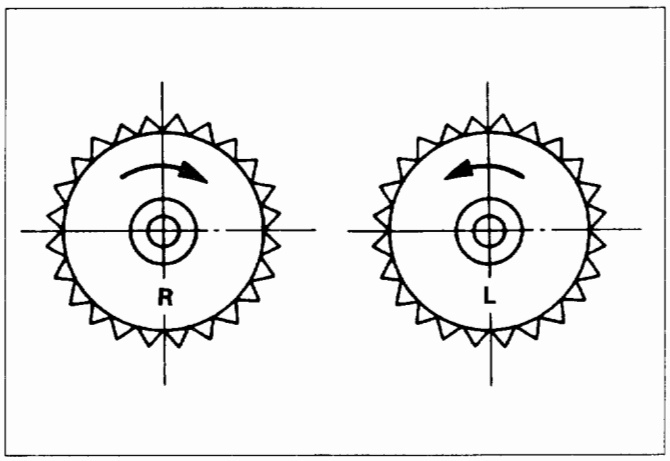

Fig. 3C-8

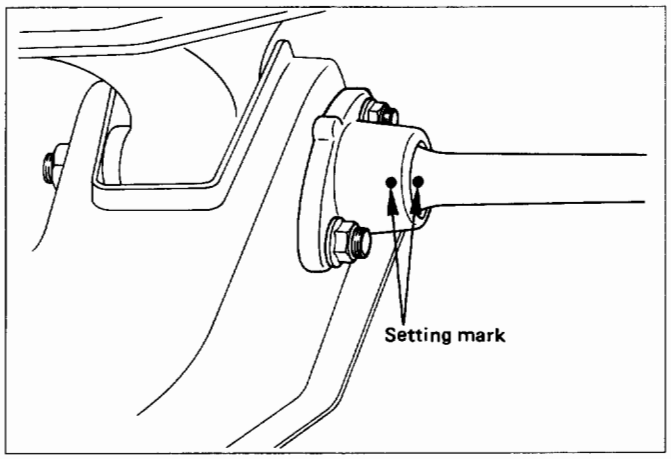

Fig. 3C-9

2. Height control arm

- Apply grease to the portion that fits into the bracket.
- Align the setting marks (Fig. 3C-10).
- Apply grease to the bolt portion of the end piece.
- Apply grease to the portion of the seat that fits into the bracket (Fig. 3C-11).
- Apply grease to the serrated portions.

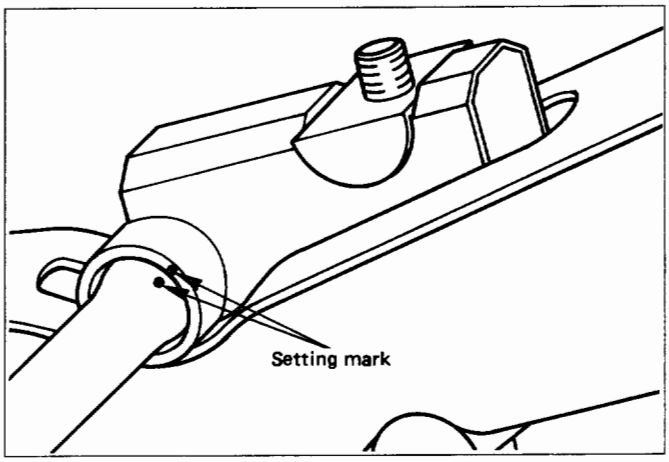

Fig. 3C-10

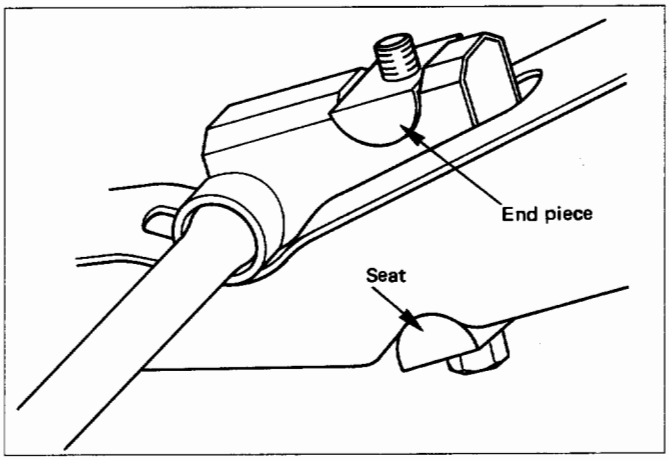

Fig. 3C-11

1. Adjust bolt and seat (Fig. 3C-12)

- Turn the adjust bolt to the setting mark applied during disassembly.

NOTE:

Adjust the trim height. Refer to "Front End Alignment" in section 3A.

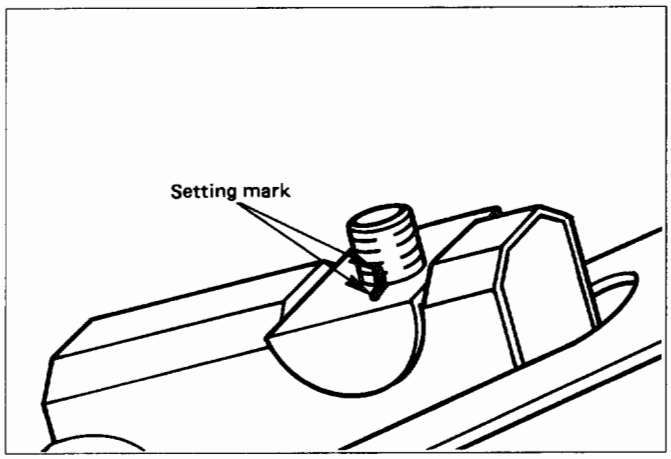

Fig. 3C-12

KNUCKLE

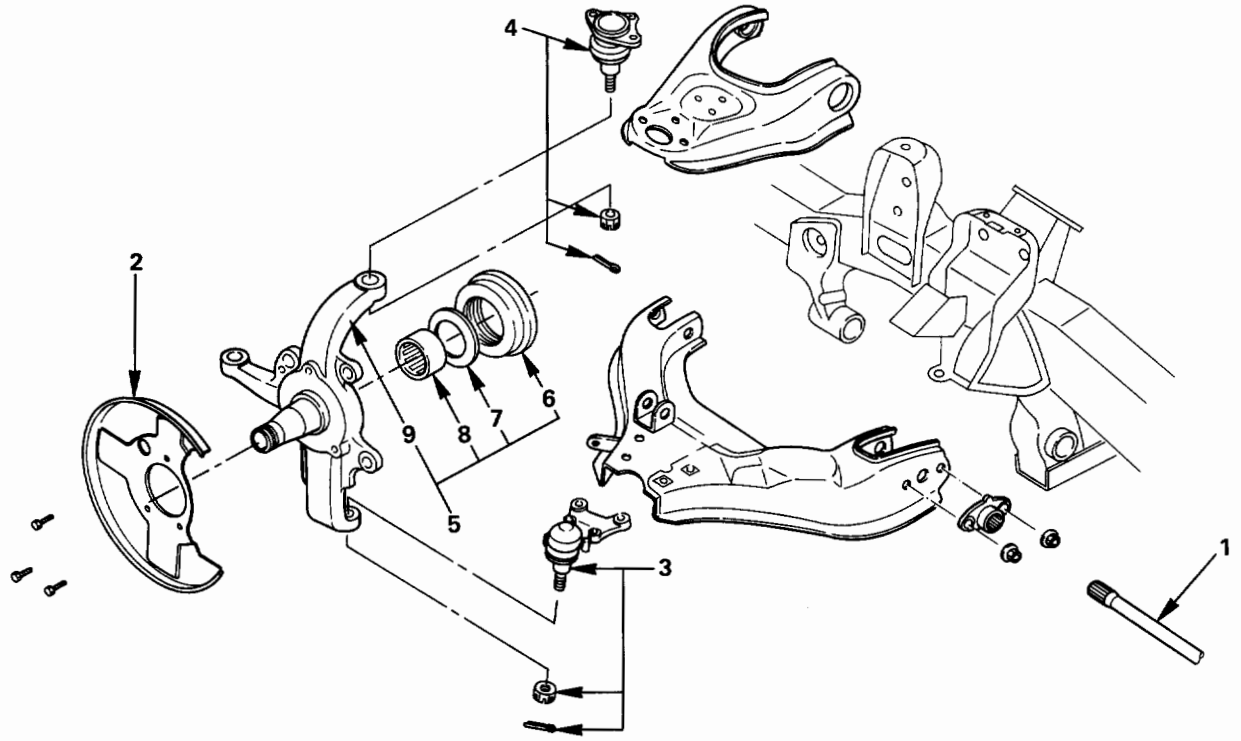

Removal steps
1. Torsion bar
2. Back plate
3. Lower ball joint
4. Upper ball joint
5. Knuckle assembly
6. Oil seal
7. Thrust washer
8. Needle bearing
9. Knuckle

Installation steps
To install, follow the removal steps in the reverse order.

Fig. 3C-13

REMOVAL

Preparation:
- Raise the vehicle and support the frame with suitable safety stands.
- Remove wheel and tire assembly. Refer to "Wheels and Tires" in section 3E.
- Remove the brake caliper. Refer to"Brakes" in section 5.
- Remove the hub assembly. Refer to "Hub and Disk" in section 4C.
- Remove outer track rod from the knuckle. Refer to "Steering Linkage" in section 3B3.
- Remove the speed sensor (If equipped with antilock brake system) from the knuckle.

1. **Torsion bar**
   - Loosen torsion bar by height control arm adjust bolt.
   - Refer to "Torsion bar" in this section.
2. **Back plate**
3. **Lower ball joint (Fig. 3C-14)**

   Remover: J-29107

   CAUTION:
   Be careful not to break the ball joint boot.
4. **Upper ball joint (Fig. 3C-15)**

   Remover: J-36831

   CAUTION:
   Be careful not to break the ball joint boot.
5. **Knuckle assembly**

6. **Oil seal**
7. **Washer**
8. **Needle bearing (Fig. 3C-16)**
   Remover: J-23907
9. **Knuckle**

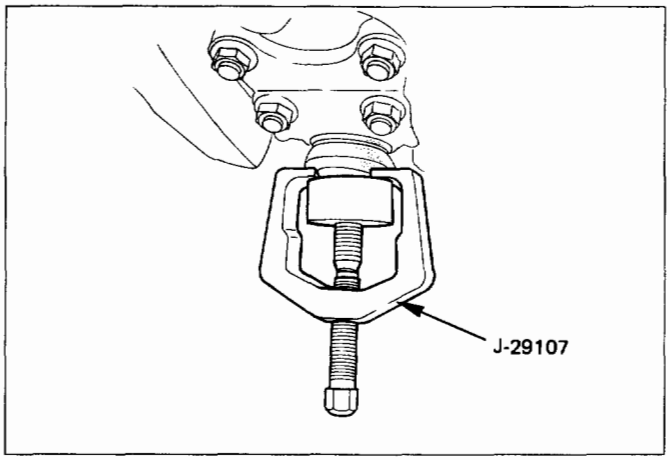

Fig. 3C-14

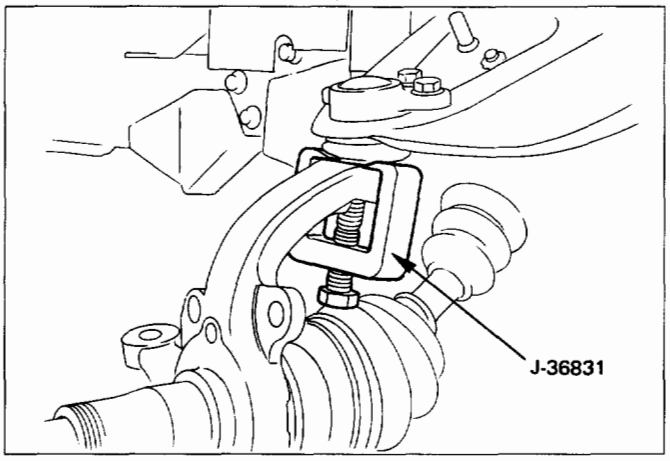

Fig. 3C-15

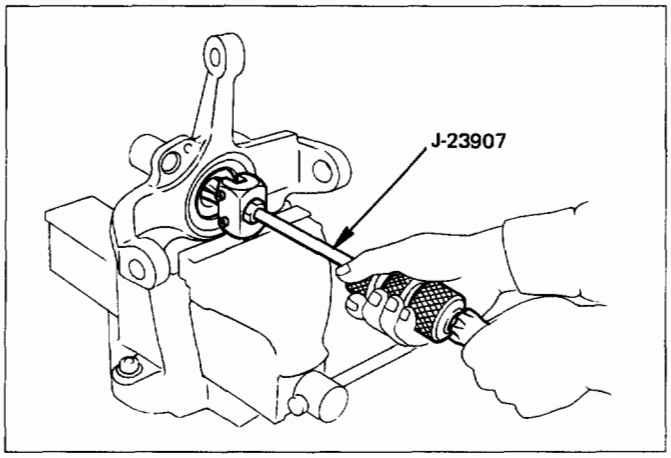

Fig. 3C-16

INSPECTION AND REPAIR

Make necessary correction or parts replacement if wear, damage, corrosion or any other abnormal condition are found through inspection.

Check the following parts:

- Knuckle
- Knuckle arm
- Needle bearing
- Thrust washer

INSTALLATION

9. **Knuckle**
8. **Needle bearing (Fig. 3C-17)**
   - Before installation, apply appropriate amount of multipurpose type grease to the new bearing (Approx. 5 g).

Installer: J-36838 and J-8092

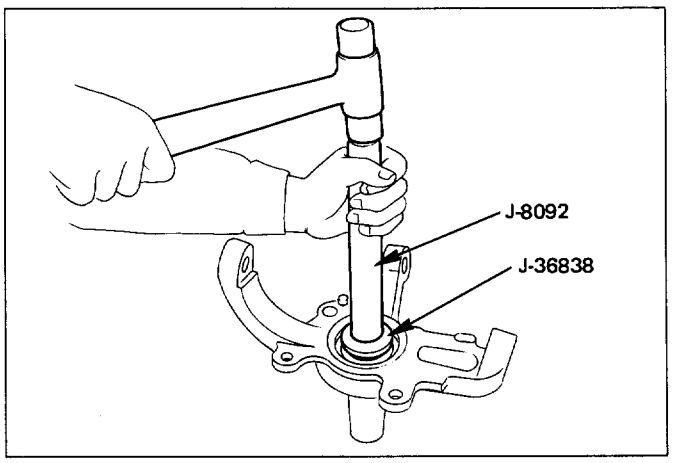

Fig. 3C-17

7. **Washer**
   - Apply multipurpose type grease to the thrust washer, and install it with chamfered side facing knuckle.
6. **Oil seal**
   - Use a new oil seal, and apply multipurpose type grease to the area surrounded by the lip (approx. 2 g).
   - After fitting the oil seal to the installer, drive it to the knuckle using a hammer or bench press until the tool front face contacts with the thrust washer (Fig. 3C-18).

Installer: J-36837 and J-8092

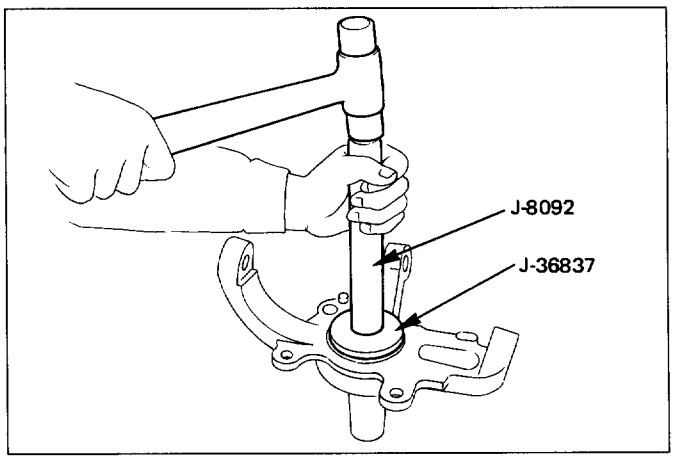

Fig. 3C-18

5. **Knuckle assembly**
4. **Upper ball joint**
   - Tighten the nut to the specified torque, with just enough additional torque to align cotter pin holes. Install new cotter pin.

Torque	N·m (lb·ft)	98 (72)

3. **Lower ball joint**
   - Tighten the nut to the specified torque, with just enough additional torque to align cotter pin holes. Install new cotter pin.

Torque	N·m (lb·ft)	147 (108)

2. **Back plate**
1. **Torsion bar**
   - Refer to "Torsion bar" in this section.

NOTE:
Adjust the trim height. Refer to "Front End Alignment" in section 3A.

UPPER CONTROL ARM

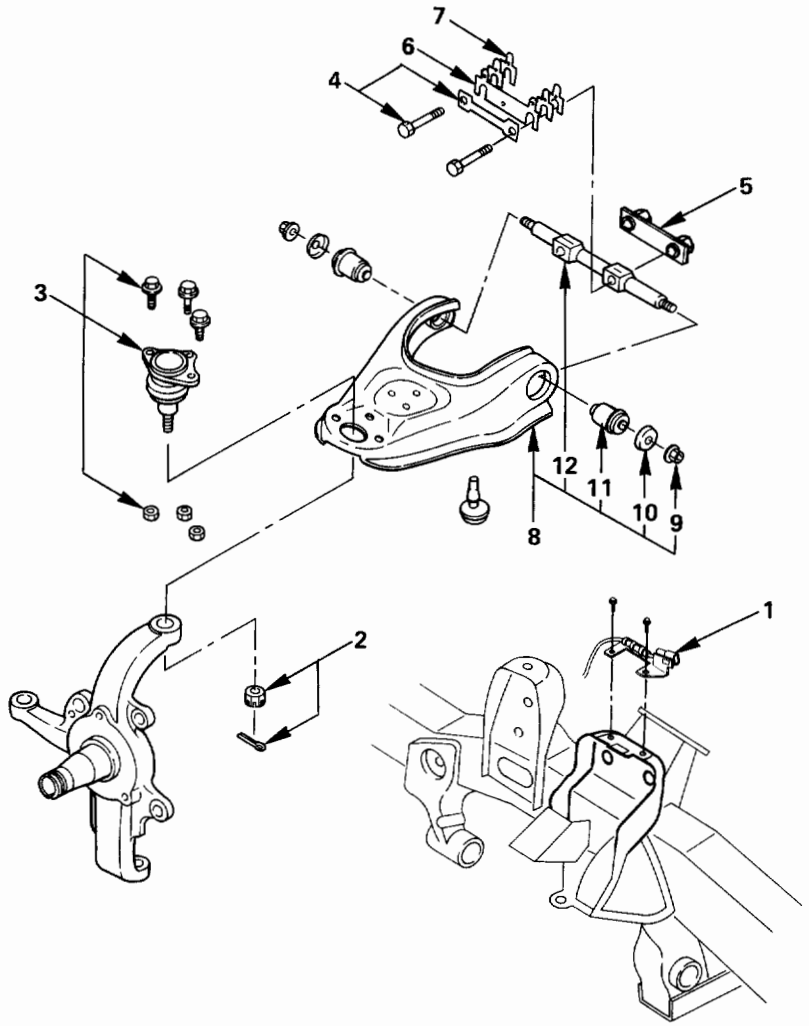

Removal steps
1. Speed sensor cable (If equipped with antilock brake system)
2. Nut and cotter pin
3. Upper ball joint
4. Bolt and plate
5. Nut assembly
6. Camber shims
7. Caster shims
8. Upper control arm assembly
9. Nut
10. Plate
11. Bushing
12. Fulcrum pin

Installation steps
To install, follow the removal steps in the reverse order.

Fig. 3C-19

REMOVAL

Preparation:
- Raise the vehicle and support the frame with suitable safety stands.
- Remove wheel and tire assembly. Refer to "Wheels and Tires" in section 3E.
- Remove the brake caliper and disconnect brake pipe. Refer to "Brakes" in section 5.
- Support lower control arm with a jack.

1. **Speed sensor cable (If equipped with antilock brake system)**
2. **Nut and cotter pin (Fig. 3C-20)**
   - Remove the upper ball joint from the knuckle.

Remover: J-36831

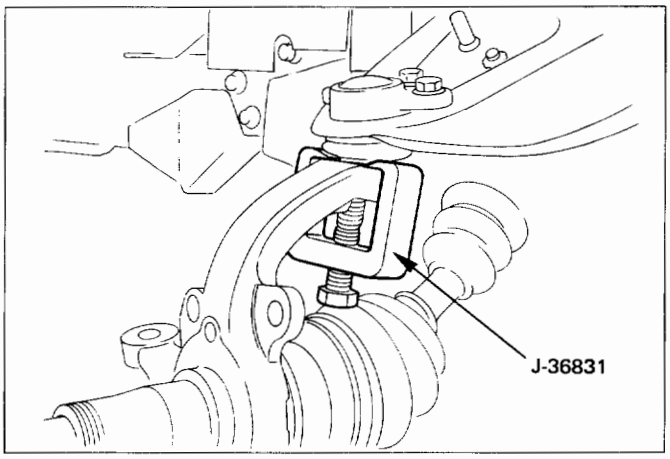

Fig. 3C-20

CAUTION:
Be careful not to break the ball joint boot.

3. **Upper ball joint**
4. **Bolt and plate**
5. **Nut assembly**
6. **Camber shims**
   - Note the positions and number of shims.
7. **Caster shims**
   - Note the positions and number of shims.
8. **Upper control arm assembly**
9. **Nut**
10. **Plate**
11. **Bushing (Fig. 3C-21 and 3C-22)**

Remover: J-29755

12. **Fulcrum pin**

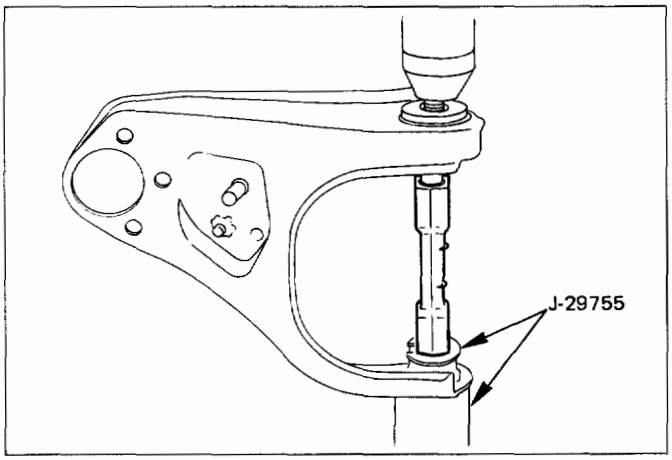

Fig. 3C-21

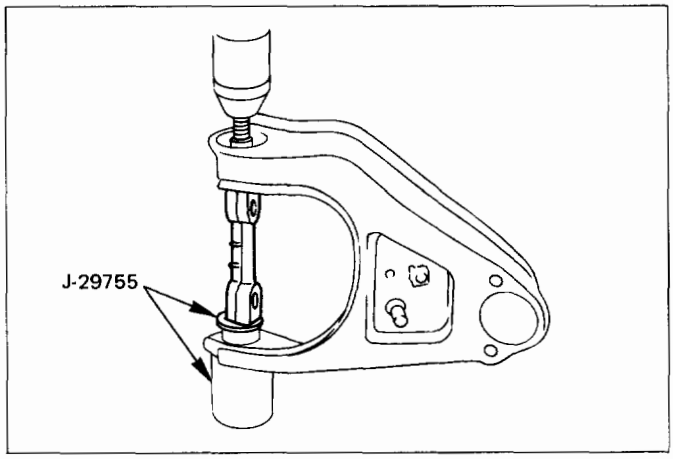

Fig. 3C-22

INSPECTION AND REPAIR

Make necessary parts replacement if wear, damage, corrosion or any other abnormal conditions are found through inspection.
Check the following parts:

- Upper control arm
- Bushing
- Fulcrum pin

INSTALLATION

12. **Fulcrum pin**
11. **Bushing (Fig. 3C-23 and 3C-24)**

Installer: J-29755 and J-39376

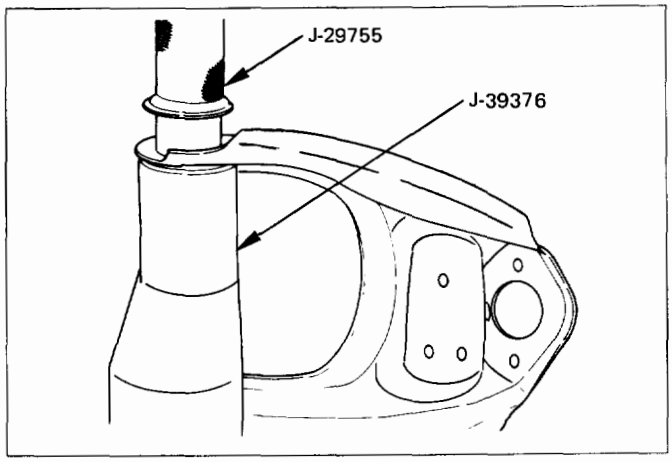

Fig. 3C-23

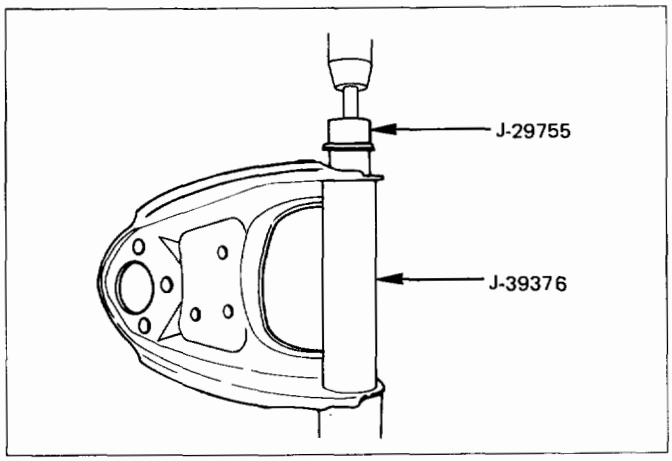

Fig. 3C-24

10. **Plate**
9. **Nut**
   - Tighten fulcrum pin nut finger-tight.

NOTE:
Torque fulcrum pin nut after adjusting buffer clearance (Fig. 3C-25)

Buffer clearance (T) mm (in)	20 (0.79)

Torque N·m (lb·ft)	108 (80)

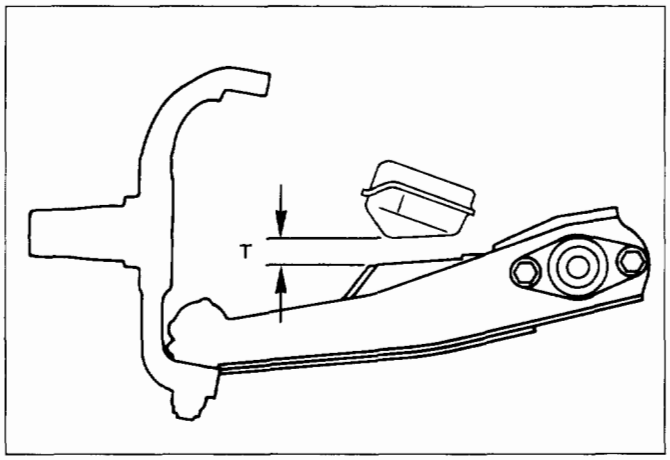

Fig. 3C-25

8. **Upper control arm assembly (Fig. 3C-26)**
   - Install with the fulcrum pin projections turned inward.
7. **Caster shims (Fig. 3C-27)**
   - Install the caster shims between the chassis frame and fulcrum pin.
6. **Camber shims (Fig. 3C-27)**
   - Install the camber shims between the chassis frame and fulcrum pin.

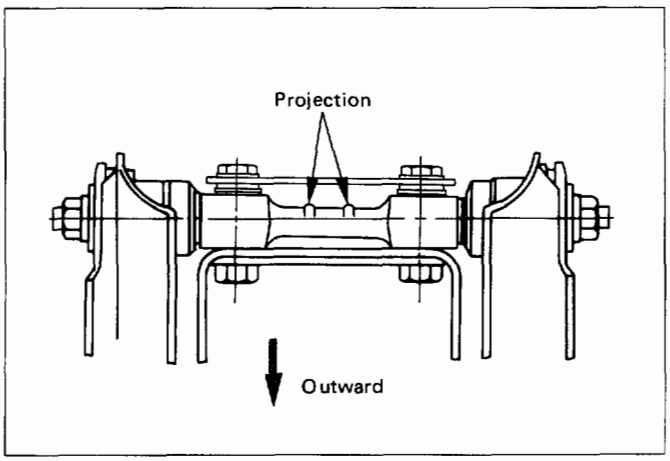

Fig. 3C-26

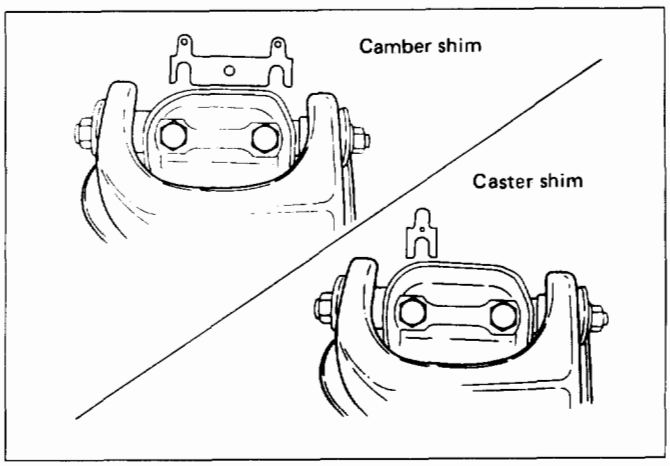

Fig. 3C-27

5. **Nut assembly**
4. **Bolt and plate**

Torque N·m (lb·ft)	152 (112)

3. **Upper ball joint**

Torque N·m (lb·ft)	57 (42)

2. **Nut and cotter pin**
   - Tighten the nut to the specified torque, with just enough additional torque to align cotter pin holes. Install new cotter pin.

Torque N·m (lb·ft)	98 (72)

1. **Speed sensor cable (If equipped with ABS)**

LOWER CONTROL ARM

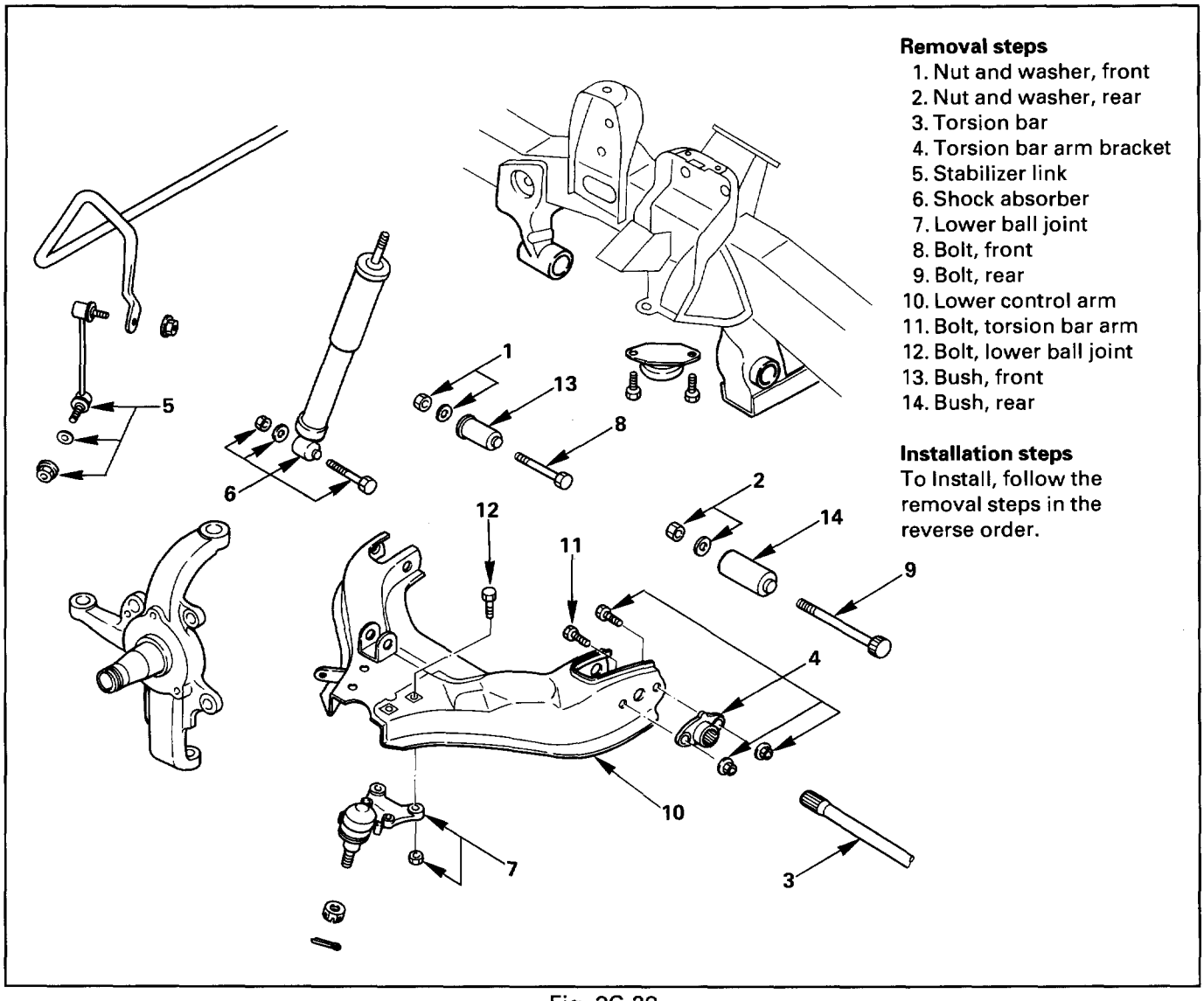

Removal steps

1. Nut and washer, front
2. Nut and washer, rear
3. Torsion bar
4. Torsion bar arm bracket
5. Stabilizer link
6. Shock absorber
7. Lower ball joint
8. Bolt, front
9. Bolt, rear
10. Lower control arm
11. Bolt, torsion bar arm
12. Bolt, lower ball joint
13. Bush, front
14. Bush, rear

Installation steps

To Install, follow the removal steps in the reverse order.

Fig. 3C-28

REMOVAL

Preparation:

- Raise the vehicle and support the frame with suitable safety stands.
- Remove wheel and tire assembly. Refer to "Wheels and Tires" in section 3E.
- Remove the outer track rod from the knuckle. Refer to "Steering linkage" in section 3B3.
- Remove the retaining ring from the front axle driving shaft to release the shaft from hub. Refer to "Front axle" in section 4C.
- Support lower control arm with a jack.

1. **Nut and washer, front**
2. **Nut and washer, rear**
3. **Torsion bar**
   - Refer to "Torsion bar" in this section.
4. **Torsion bar arm bracket**
5. **Stabilizer link**
   - Disconnect the link at the lower control arm.
6. **Shock absorber**
   - Remove the shock absorber lower end from the lower control arm.
7. **Lower ball joint**
   - Remove the lower ball joint from the lower control arm.
8. **Bolt, front**

9. **Bolt, rear**
10. **Lower control arm**
11. **Bolt, torsion bar arm**
12. **Bolt, lower ball joint**
13. **Bushing, front (Fig. 3C-29 and 3C-30)**
    Remover: J-36833
14. **Bushing, rear (Fig. 3C-31 and 3C-32)**
    Remover: J-36834

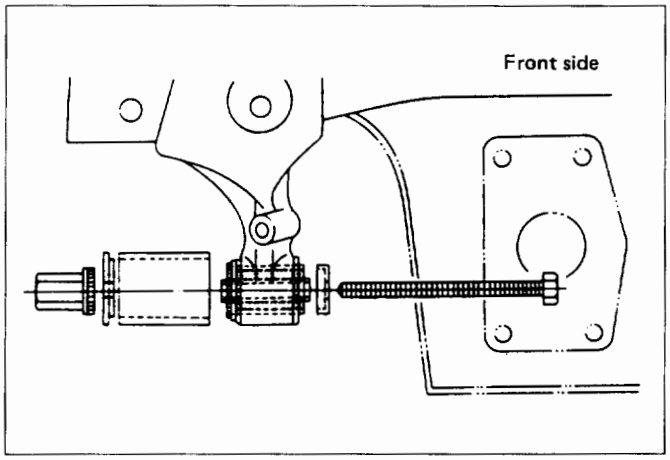

Fig. 3C-29

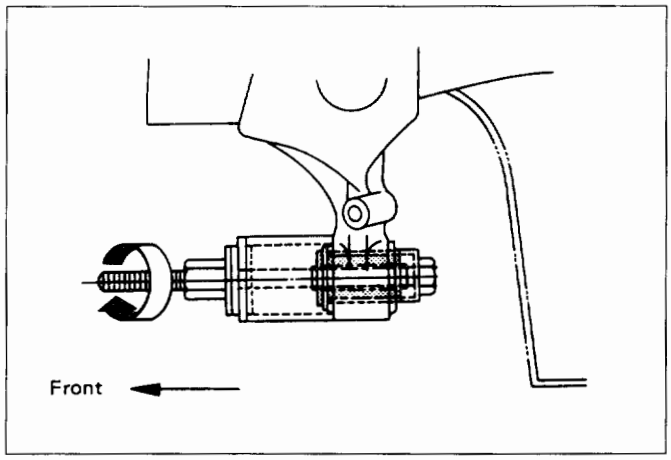

Fig. 3C-30

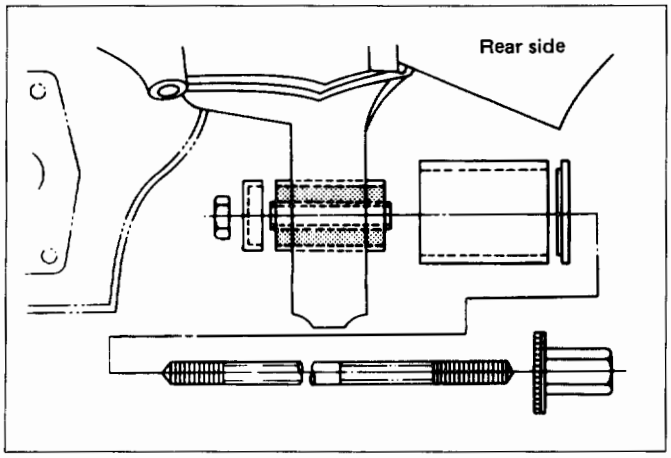

Fig. 3C-31

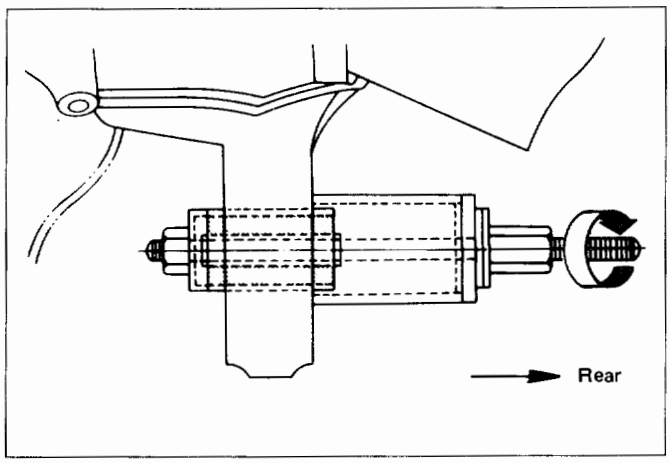

Fig. 3C-32

INSPECTION AND REPAIR

Make necessary correction or parts replacement if wear, damage, corrosion or any other abnormal condition are found through inspection.
Check the following parts:

- Lower control arm
- Bushing

INSTALLATION

14. Bushing, rear (Fig. 3C-33)

Installer: J-36834

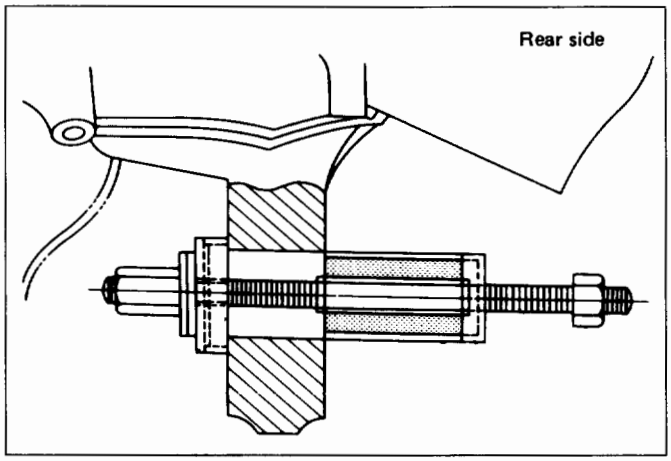

Fig. 3C-33

13. Bushing, front (Fig. 3C-34)

Installer: J-36833

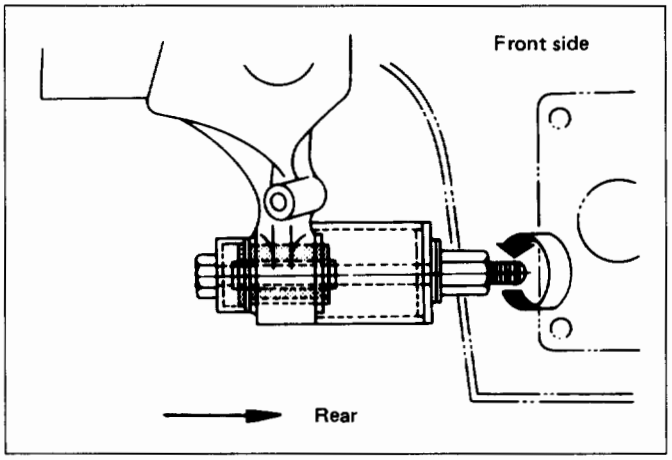

Fig. 3C-34

12. Bolt, lower ball joint

11. Bolt, torsion bar arm

10. Lower control arm

9. Bolt, rear

8. Bolt, front

7. Lower ball joint

Torque	N·m (lb·ft)	103 (76)

6. Shock absorber

Torque	N·m (lb·ft)	82 (61)

5. Stabilizer link

Torque	N·m (lb·ft)	50 (37)

4. Torsion bar arm bracket

Torque	N·m (lb·ft)	116 (85)

3. Torsion bar

- Refer to "Torsion bar" in this section.

2. Nut and washer, rear

- Tighten lower link nut finger-tight.

NOTE:
Torque lower control arm nut after adjusting buffer clearance (Fig. 3C-35).

Buffer clearance (T)	mm (in)	20 (0.79)

Torque	N·m (lb·ft)	196 (145)

1. Nut and washer, front

- Tighten lower link nut finger-tight.

NOTE:
Torque lower control arm nut after adjusting buffer clearance (Fig. 3C-35).

Buffer clearance (T)	mm (in)	20 (0.79)

Torque	N·m (lb·ft)	157 (116)

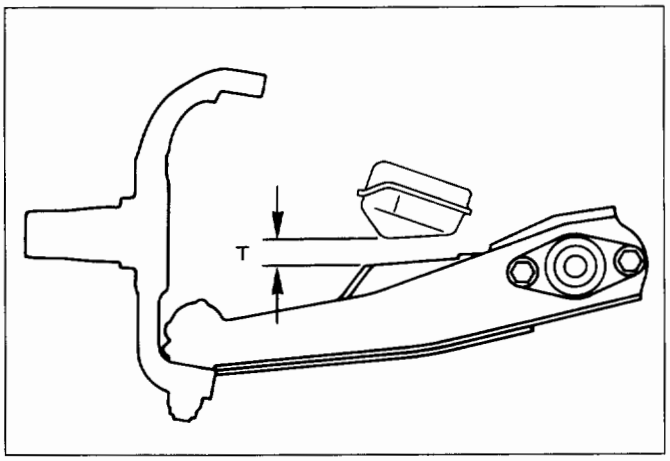

Fig. 3C-35

NOTE:
Adjust the trim height. Refer to "Front End Alignment" in section 3A.

UPPER BALL JOINT

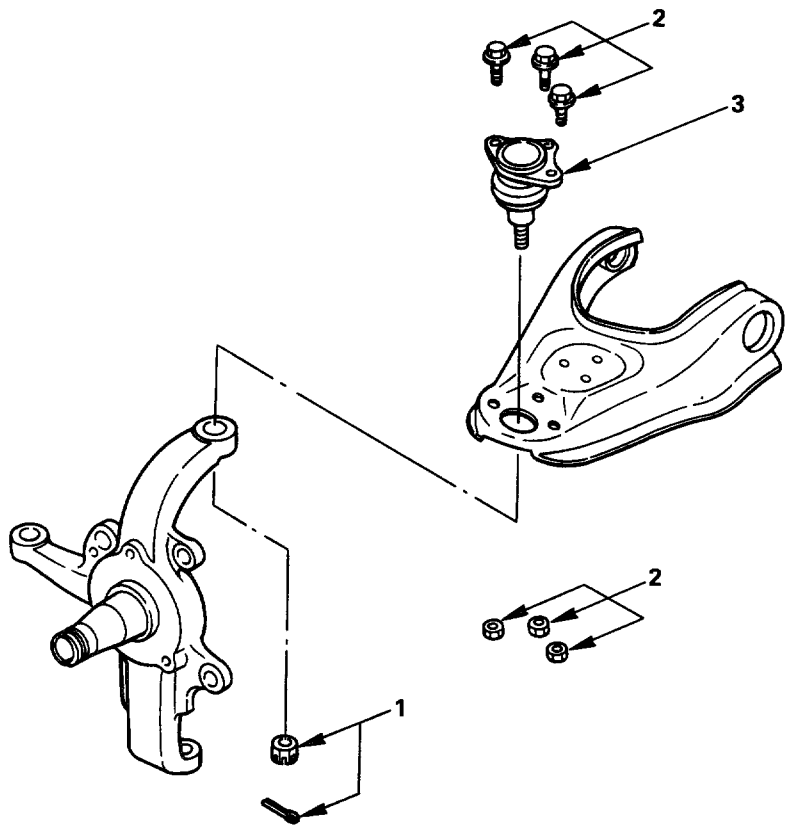

Removal steps
1. Nut and cotter pin
2. Bolt and nut
3. Upper ball joint

Installation steps
To install, follow the removal steps in the reverse order.

Fig. 3C-36

REMOVAL

Preparation:
- Raise the vehicle and support the frame with suitable safety stands.
- Remove the speed sensor from the knuckle (If equipped with antilock brake system).

1. **Nut and cotter pin**
   - Remove the upper ball joint from the knuckle (Fig. 3C-37).

Remover: J-36831

CAUTION:
Be careful not to break the ball joint boot.

2. **Bolt and washer**
3. **Upper ball joint**

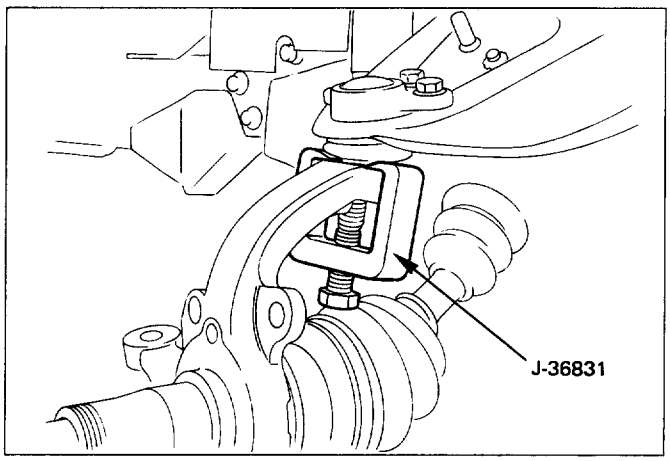

Fig. 3C-37

INSPECTION AND REPAIR

Make necessary parts replacement if wear, damage, corrosion or any other abnormal conditions are found through inspection.

- Inspect the lower end boot for damage or grease leak. Move the ball joint as shown in the figure to confirm its normal movement (Fig. 3C-38).
  Inspect screw/taper area of ball for flaws.
  If any defects are found by the above inspections, replace the ball joint assembly with new one.

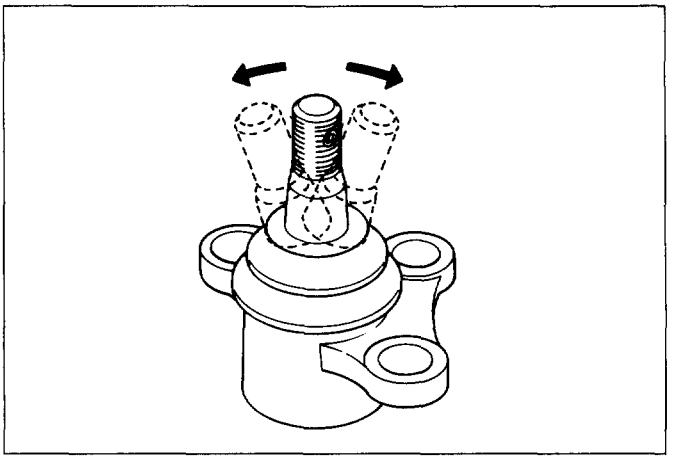

Fig. 3C-38

- After moving the ball joint 4 or 5 times, attach nut then measure the preload (Fig. 3C-39).

Starting torque N·m (lb·ft)	0.5 - 3.2 (0.4 - 2.4)

If the above limits specified are exceeded, replace the ball joint assembly.

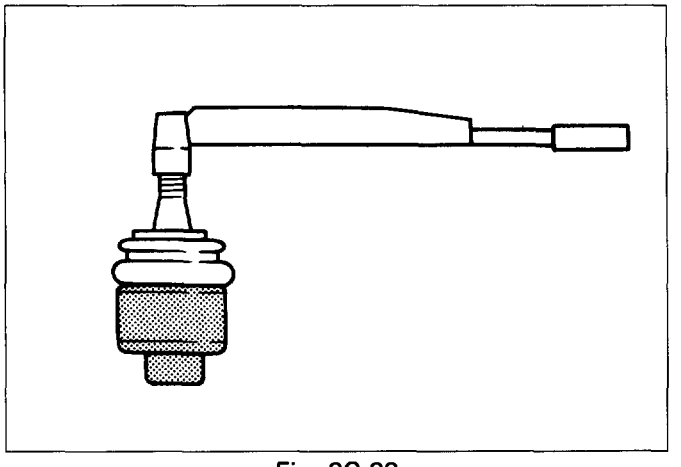

Fig. 3C-39

INSTALLATION

3. Upper ball joint

2. Bolt and nut

Torque N·m (lb·ft)	57 (42)

1. Nut and cotter pin

- Tighten the nut to the specified torque with just enough additional torque to align cotter pin holes. Install new cotter pin.

Torque N·m (lb·ft)	98 (72)

LOWER BALL JOINT

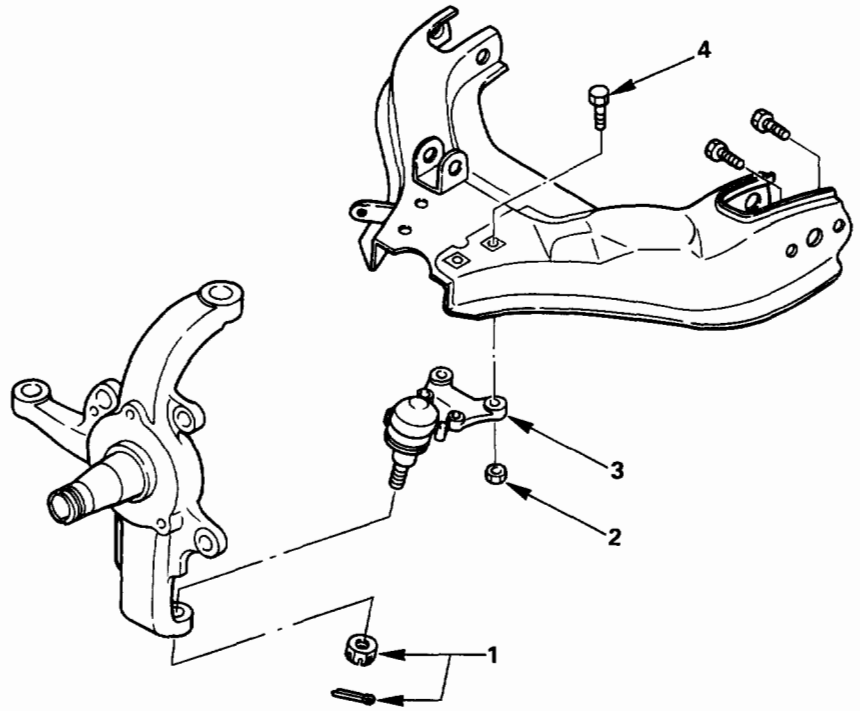

Removal steps
1. Nut and cotter pin
2. Nut
3. Lower ball joint
4. Bolt

Installation steps
To install, follow the removal steps in the reverse order.

Fig. 3C-40

REMOVAL

Preparation:
- Raise the vehicle and support the frame with suitable safety stands.
- Remove wheel and tire assembly. Refer to "Wheels and Tires" in section 3E.
- Remove the outer track rod from the knuckle. Refer to "Steering linkage" in section 3B3.
- Remove the retaining ring from the front axle driving shaft to release the shaft from hub. Refer to "Front axle" in section 4C.
- Support lower control arm with a jack.

1. Nut and cotter pin
- Remove the lower ball joint from the knuckle (Fig. 3C-41).

Remover: J-29107

CAUTION:
Be careful not to break the ball joint boot.

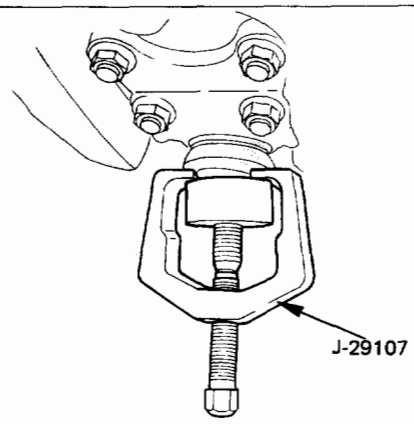

Fig. 3C-41

2. Nut

3. Lower ball joint

4. Bolt

INSPECTION AND REPAIR

Make necessary parts replacement if wear, damage, corrosion or any other abnormal condition are found through inspection.

- Inspect the lower end boot for damage or grease leak. Move the ball joint as shown in the figure to confirm its normal movement (Fig. 3C-42).
  Inspect screw/taper area of ball for flaws.
  If any defects are found by the above inspections, replace the ball joint assembly with new one.

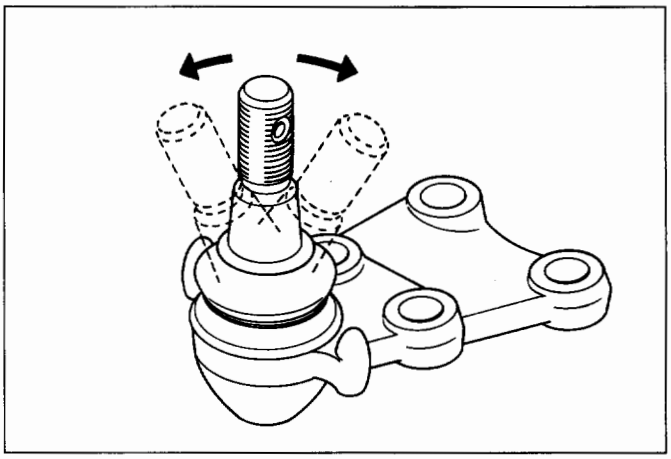

Fig. 3C-42

- After moving the ball joint 4 or 5 times, attach nut the measure the preload (Fig. 3C-43).

Starting torque	N.m (lb.ft)	0.5 - 6.4 (0.4 - 4.7)

If the above limits specified are exceeded, replace the ball joint assembly.

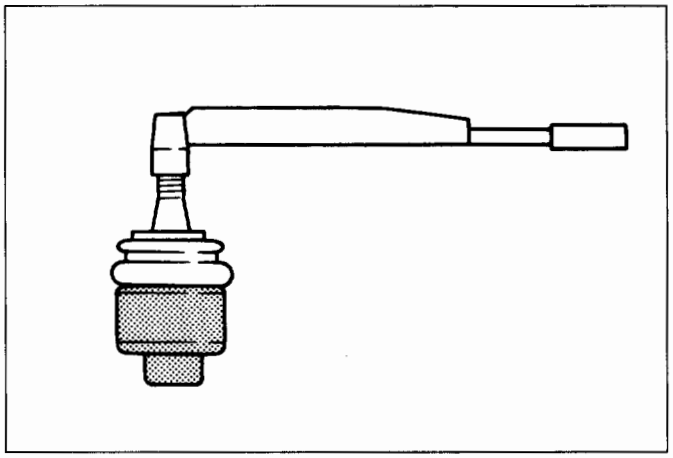

Fig. 3C-43

INSTALLATION

4. **Bolt**
3. **Lower ball joint**
2. **Nut**

Torque	N·m (lb·ft)	103 (76)

1. **Nut and cotter pin**
   - Tighten the nut to the specified torque with just enough additional torque to align cotter pin holes. Install new cotter pin.

Torque	N·m (lb·ft)	147 (108)

MAIN DATA AND SPECIFICATIONS

GENERAL SPECIFICATIONS

Front suspension Type		Independent wishbone arms, torsion bar spring with stabilizer bar.
Torsion bar spring Length Diameter	 mm (in) mm (in)	 1217 (47.9) LWB: 26.6 (1.05), SWB: 29.0 (1.14)
Front shock absorber Type Piston diameter Stroke Compressed length Extended length	 mm (in) mm (in) mm (in) mm (in)	 Hydraulic, double acting, telescopic 30.0 (1.18) 130.0 (5.12) 390.0 (15.35) 260.0 (10.24)
Stabilizer bar Diameter	 mm (in)	 LWB: 26.0 (1.02), SWB: 28.0 (1.10)

TORQUE SPECIFICATIONS

N·m (lb·ft)

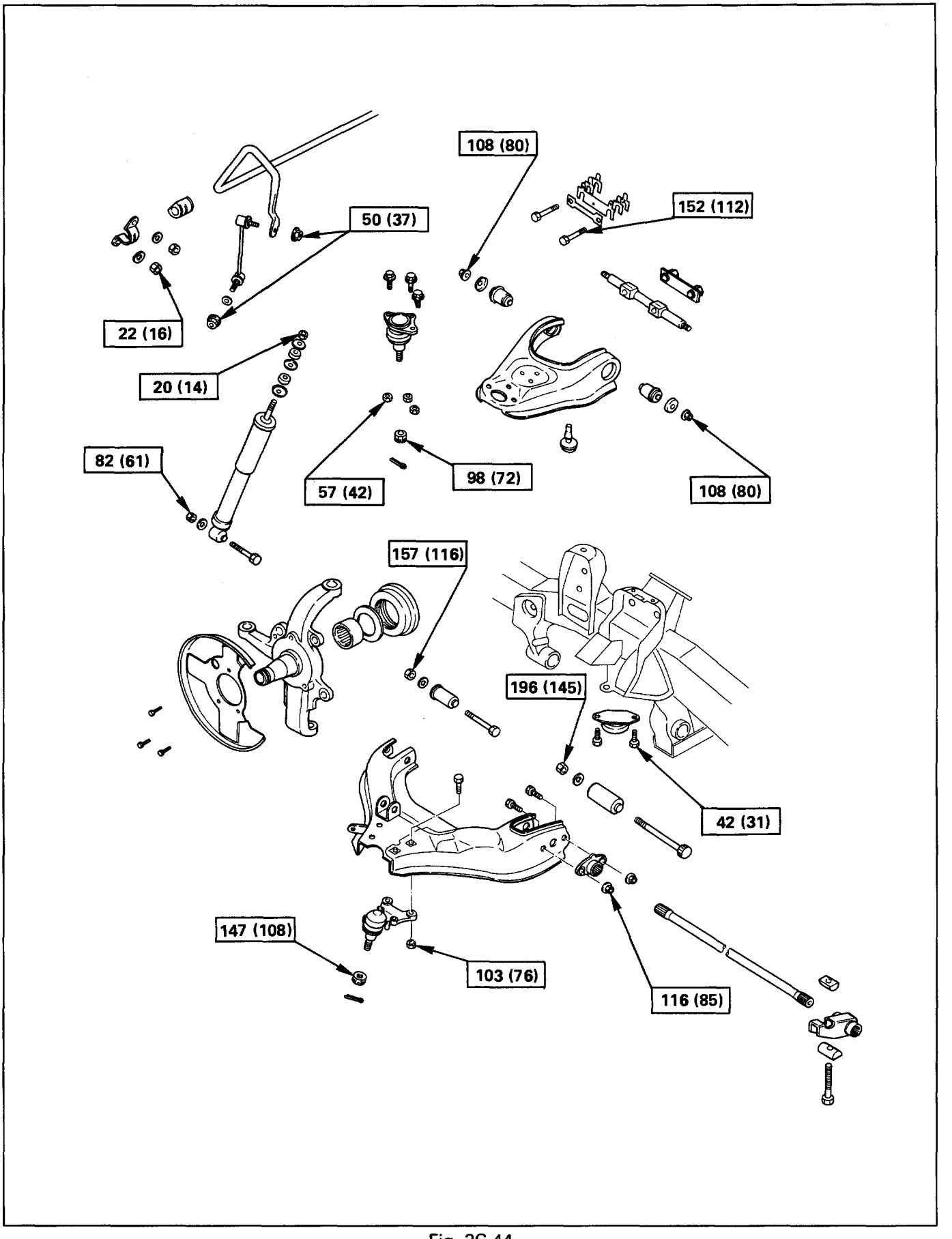

Fig. 3C-44

SPECIAL TOOLS

ILLUSTRATION	TOOL NO. TOOL NAME
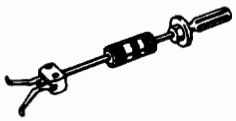	**J-23907** Remover: Needle bearing
	J-36838 Installer: Needle bearing
	J-8092 Grip
	J-36837 Installer: Oil seal
	J-39376 Installer: Upper arm bushing

ILLUSTRATION	TOOL NO. TOOL NAME
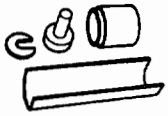	**J-29755** Remover and Installer Upper arm bushing
	J-36833 Remover and Installer kit: Lower arm front bushing
	J-36834 Remover and Installer kit: Lower arm rear bushing
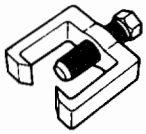	**J-36831** Tie rod end remover
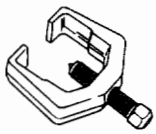	**J-29107** Lower end remover

SECTION 3D

REAR SUSPENSION

CAUTION:
When fasteners are removed, always reinstall them at the same location from which they were removed. If a fastener needs to be replaced, use the correct part number fastener for that application. If the correct part number fastener is not available, a fastener of equal size and strength (or stronger) may be used. Fasteners that are not reused, and those requiring thread locking compound, will be called out. The correct torque value must be used when installing fasteners that require it. If the above conditions are not followed, parts or system damage could result.

CONTENTS

General Description 3D- 2
On-Vehicle Service 3D- 3
  Coil Spring 3D- 3
  Shock Absorber 3D- 5
  Trailing Link 3D- 6
  Center Link 3D- 8
  Lateral Rod 3D-10
  Stabilizer Bar 3D-11
Main Data and Specifications 3D-12
  General Specifications 3D-12
  Torque Specifications 3D-13
Special Tools 3D-13

GENERAL DESCRIPTION

The rear suspension is a 4-link, coil spring type suspension with a stabilizer bar, consisting of two trailing links, center link, lateral rod, shock absorber, and stabilizer. In this suspension, the links are specially arranged to enable the rear axle to move freely, thereby expanding suspension stroke, reducing friction, and improving lateral rigidity and roll control. All these result in improved stability, riding comfort, and rough road maneuverability.

Each link connects the axle housing with the frame through a runner bushing. The axle housing is supported by the trailing links and center link longitudinally and by the lateral rod latitudinally.

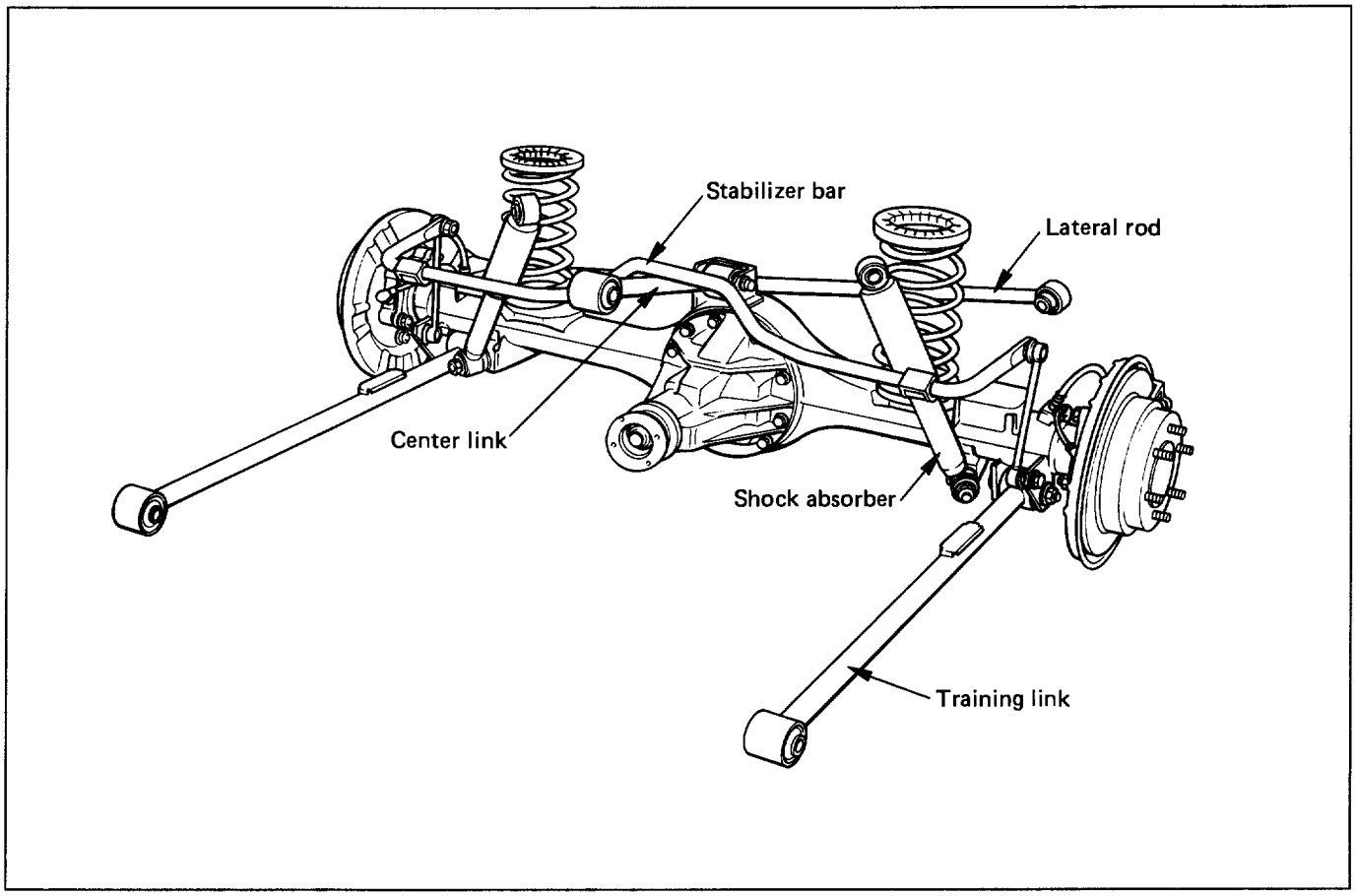

Fig. 3D-1

ON-VEHICLE SERVICE

COIL SPRING

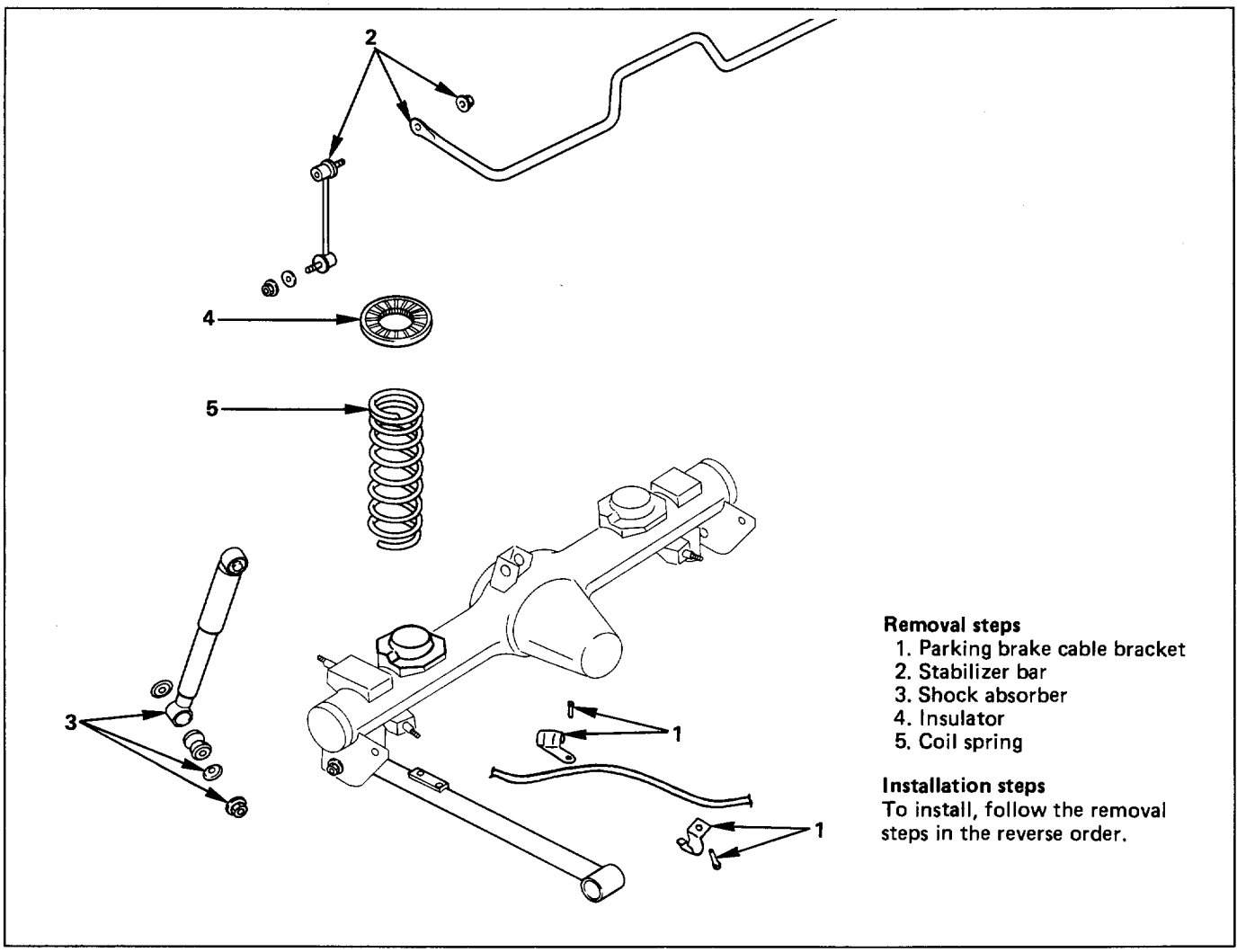

Fig. 3D-2

REMOVAL

Preparation:
- Raise the vehicle and support the frame with suitable safety stands.
- Support the rear axle case with a jack.

1. **Parking brake cable bracket**
   - Remove the parking brake cable from the trailing link.
2. **Stabilizer bar**
   - Disconnect the stabilizer bar at the stabilizer link.
3. **Shock absorber**
   - Remove the shock absorber from the axle case.
4. **Insulator**
5. **Coil spring**
   - Remove the insulator and coil spring while lowering the rear axle case.

CAUTION:
Be sure not to let the brake hose, parking brake cable, and breather hose extend to their full length.

INSPECTION AND REPAIR

Make necessary correction or parts replacement if wear, damage, corrosion or any other abnormal condition are found through inspection.
- Coil spring
- Insulator

INSTALLATION

5. **Coil spring**
   - Make sure that the coil spring is installed in the proper position (Fig. 3D-3).
   - Fit the end of the coil spring to the coil spring seat and mount the coil spring on the rear axle case (Fig. 3D-4).

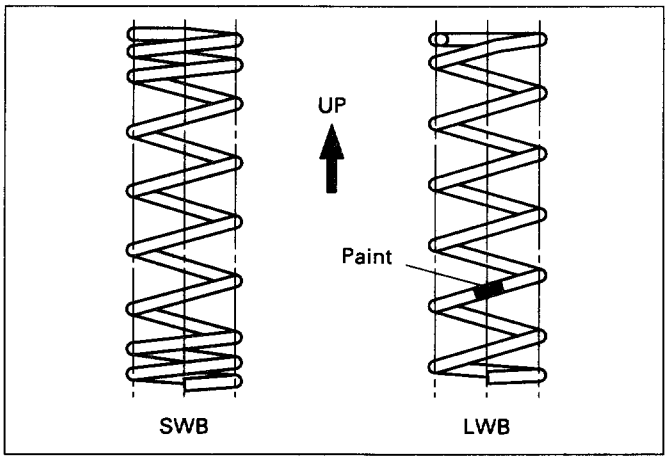

Fig. 3D-3

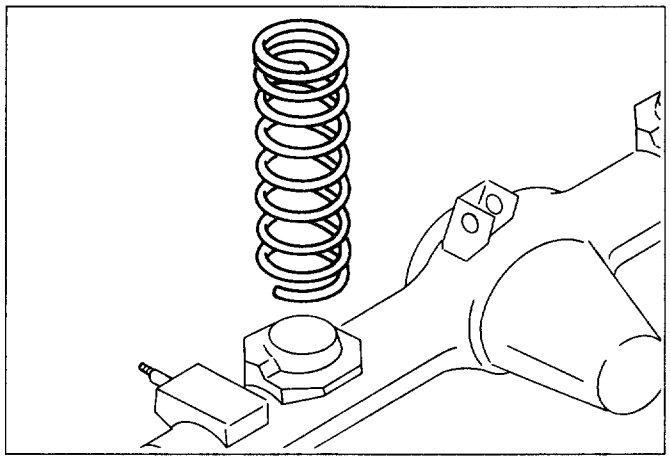

Fig. 3D-4

4. **Insulator**
   - Install the insulator on the coil spring. Jack up the axle case gently with the top of the coil spring set to the spring seat on the frame side (Fig. 3D-5).

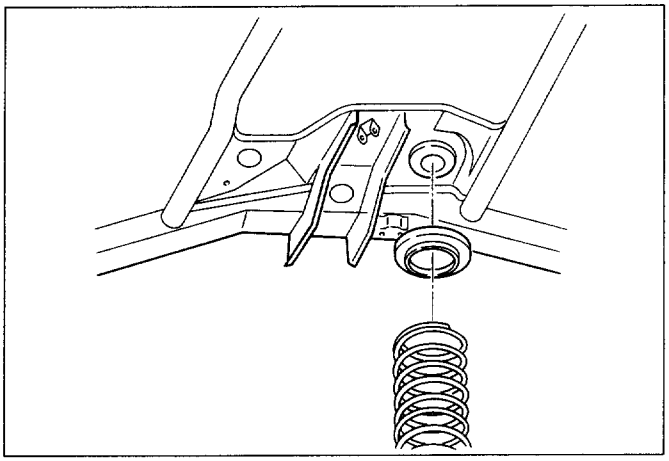

Fig. 3D-5

3. **Shock absorber**
   - Tighten the nut lightly, and retighten to the specified torque after the vehicle is at curb height.

NOTE:
When mounting shock absorber, be sure not to use grease on bushings or any other nearby part.

Torque	N·m (lb·ft)	78 (58)

2. **Stabilizer bar**

Torque	N·m (lb·ft)	50 (37)

1. **Parking brake cable bracket**

SHOCK ABSORBER

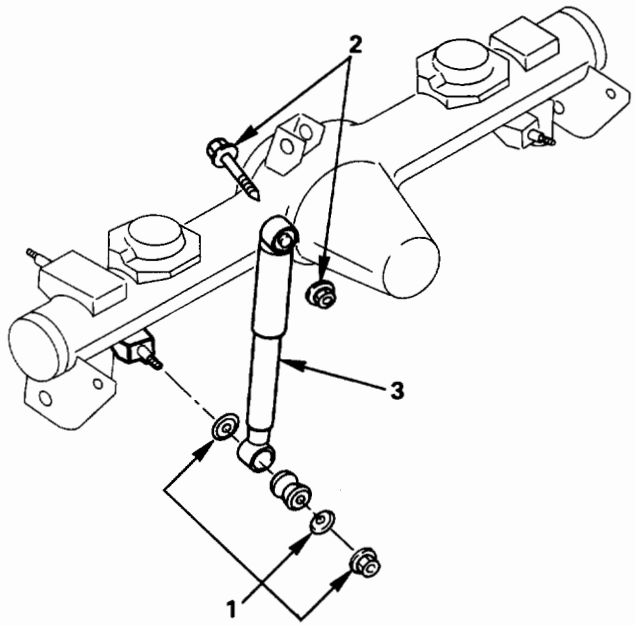

Removal steps
1. Nut and washer
2. Bolt and nut
3. Shock absorber

Installation steps
To install, follow the removal steps in the reverse order.

Fig. 3D-6

REMOVAL

1. **Nut and washer**
2. **Bolt and nut**
3. **Shock absorber**

INSPECTION AND REPAIR

Make necessary correction or parts replacement if wear, damage, corrosion or any other abnormal condition are found through inspection.

- Shock absorber
- Rubber bushing (Axle side)

NOTE:
When mounting rubber bushings, be sure not to use grease on bushings or any other nearby part.

INSTALLATION

3. **Shock absorber**

NOTE:
When mounting shock absorber, be sure not to use grease on bushings or any other nearby part.

2. **Bolt and nut**

NOTE:
Tighten the bolt and nut lightly, and retighten to the specified torque after the vehicle is at curb height.

Torque	N·m (lb·ft)	95 (70)

1. **Nut and washer**

NOTE:
Tighten the nut lightly, and retighten to the specified torque after the vehicle is at curb height.

Torque	N·m (lb·ft)	78 (58)

TRAILING LINK

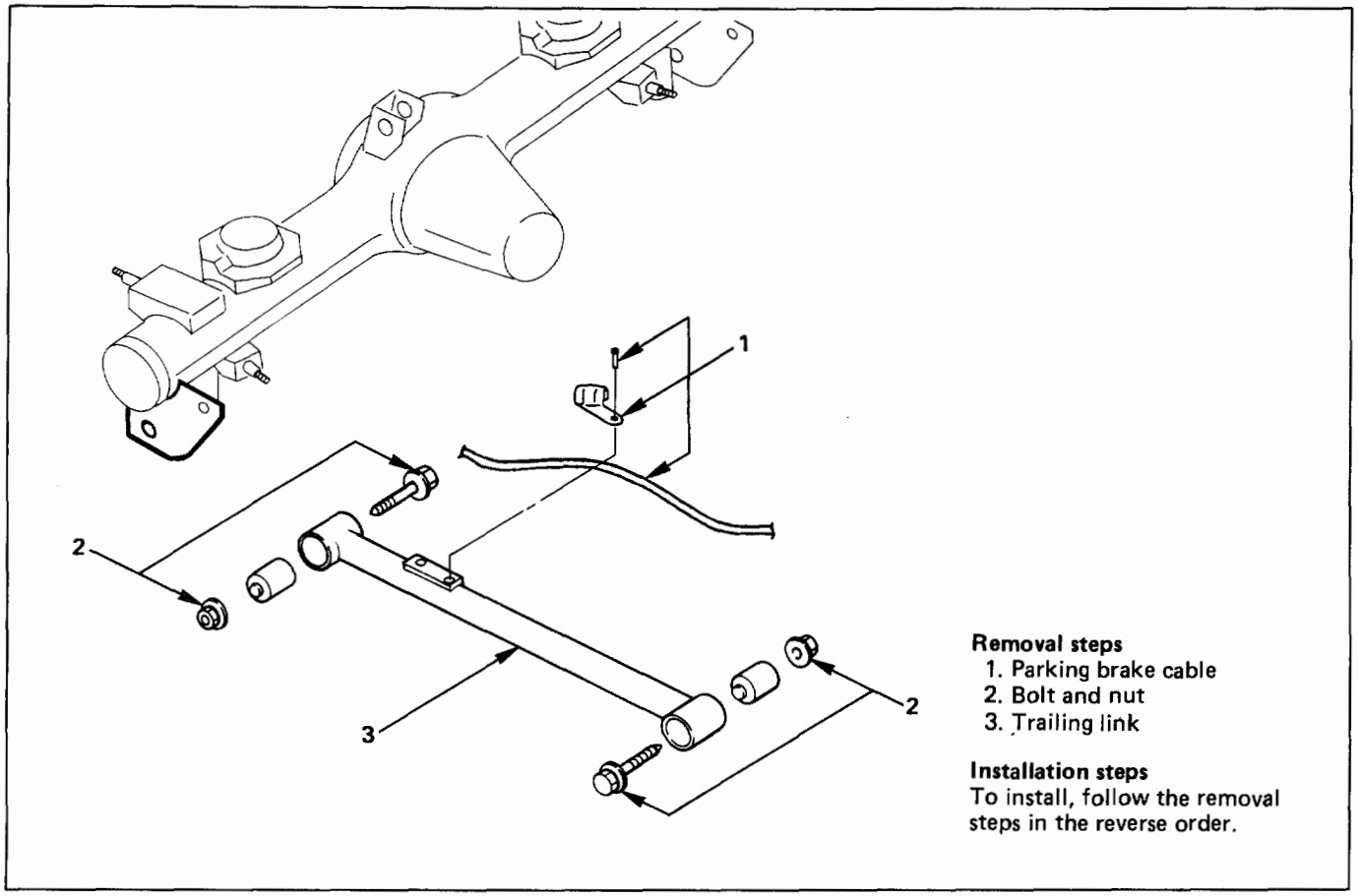

Removal steps
1. Parking brake cable
2. Bolt and nut
3. Trailing link

Installation steps
To install, follow the removal steps in the reverse order.

Fig. 3D-7

REMOVAL

1. **Parking brake cable**
   - Remove the parking brake cable from the trailing link.
2. **Bolt and nut**
3. **Trailing link**

INSPECTION AND REPAIR

Make necessary correction or parts replacement if wear, damage, corrosion or any other abnormal condition are found through inspection.

1. Trailing link
2. Rubber bushing
   - Remove the rubber bushing (Fig. 3D-8).

Remover: J-39214

   - Install the rubber bushing (Fig. 3D-9).

Installer : J-39214

NOTE:
When mounting rubber bushings, be sure not to use grease on bushings or any other nearby part.

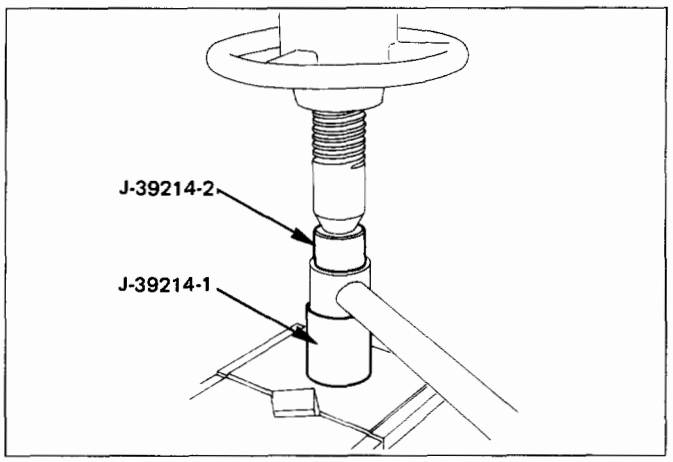

Fig. 3D-8

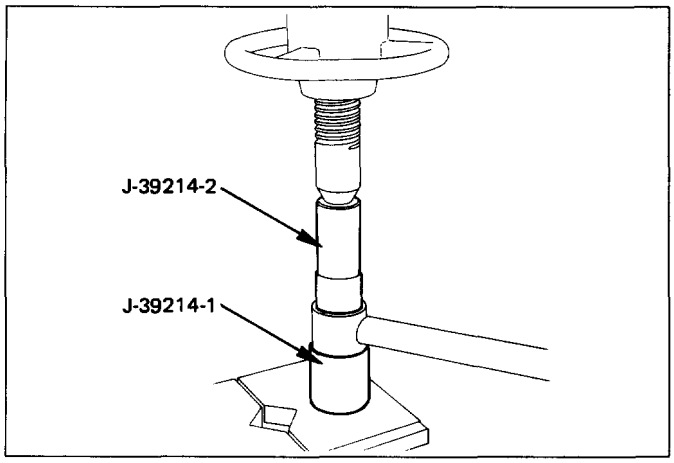

Fig. 3D-9

INSTALLATION

3. Trailing link

- Make sure that the trailing link is in its correct position (Fig. 3D-10).

NOTE:
When mounting trailing link, be sure not to use grease on bushings or any other nearby part.

2. Bolt and nut

NOTE:
Tighten the bolts and nuts lightly, and retighten to the specified torque after the vehicle is at curb height.

Torque N·m (lb·ft)	137 (101)

1. Parking brake cable

CAUTION:
The parking brake cable should not be overstrained or slackened.

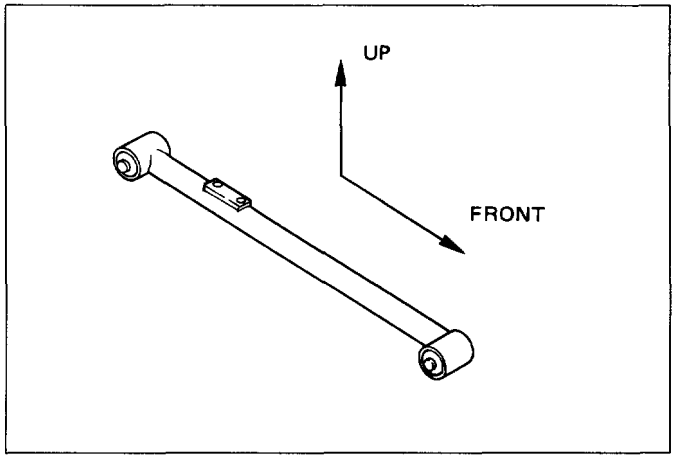

Fig. 3D-10

CENTER LINK

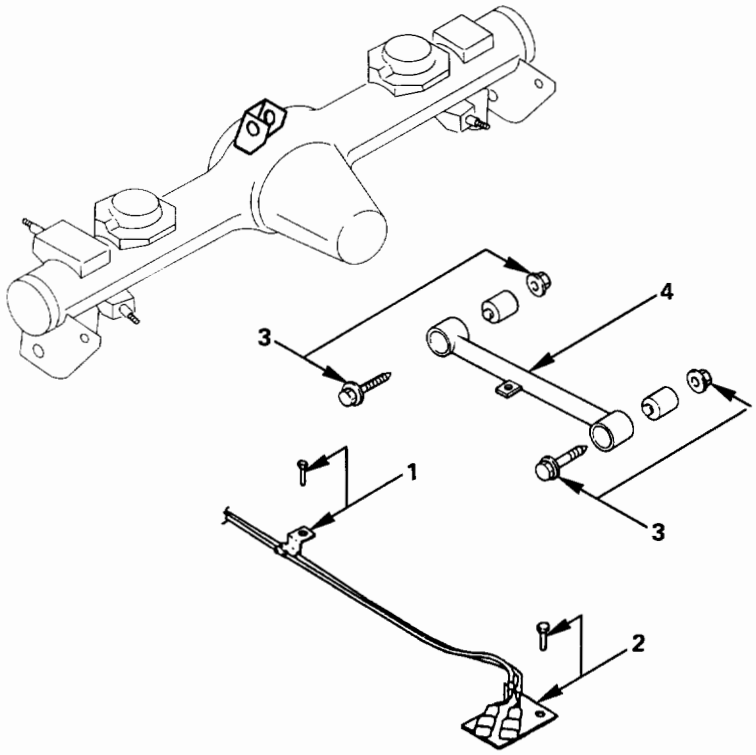

Removal steps
1. Speed sensor cable
   - If equipped with Antilock Brake System (ABS)
2. Speed sensor cable bracket (If equipped with ABS)
3. Bolt and nut
4. Center link

Installation steps
To install, follow the removal steps in the reverse order.

Fig. 3D-11

REMOVAL

1. **Speed sensor cable (If equipped with ABS)**
   - Remove the speed sensor cable from the center link.
2. **Speed sensor cable bracket (If equipped with ABS)**
   - Remove the speed sensor cable bracket from the frame.
3. **Bolt and nut**
4. **Center link**

INSPECTION AND REPAIR

Make necessary correction or parts replacement if wear, damage, corrosion or any other abnormal condition are found through inspection.

1. Center link
2. Rubber bushing
   - Remove the rubber bushing (Fig. 3D-12).

Remover : J-39214

   - Install the rubber bushing (Fig. 3D-13).

Installer : J-39214

NOTE:
When mounting rubber bushings, be sure not to use grease on bushings or any other nearby part.

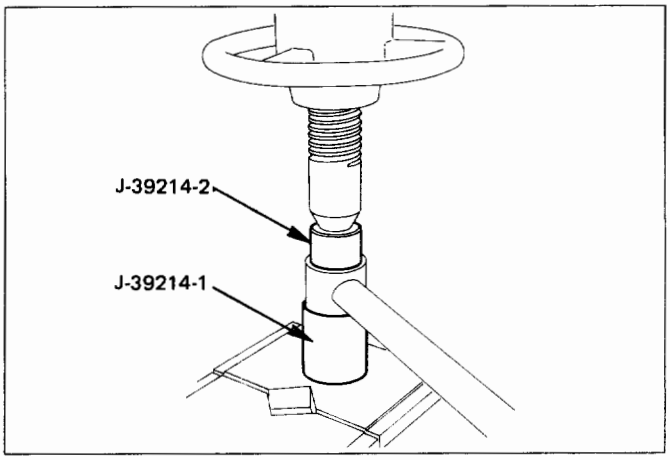

Fig. 3D-12

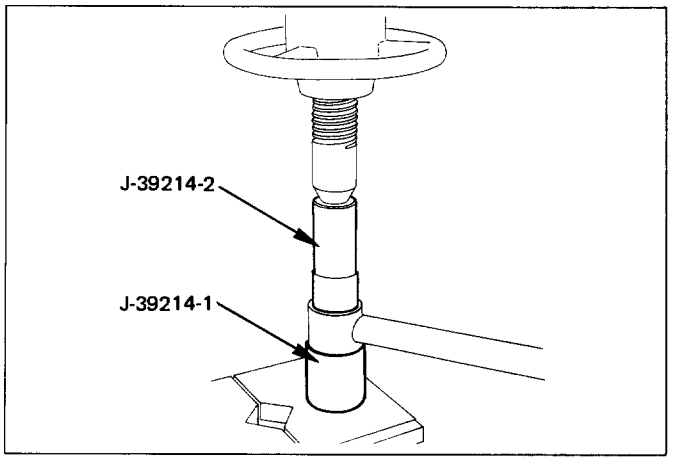

Fig. 3D-13

INSTALLATION

4. Center link

- Make sure that the center link is in its correct position (Fig. 3D-14).

NOTE:
When mounting center link, be sure not to use grease bushings or any other nearby part.

3. Bolt and nut

NOTE:
Tighten the bolts and nuts lightly, and retighten to the specified torque after the vehicle is at curb height.

Torque N·m (lb·ft)	137 (101)

2. Speed sensor cable bracket

1. Speed sensor cable

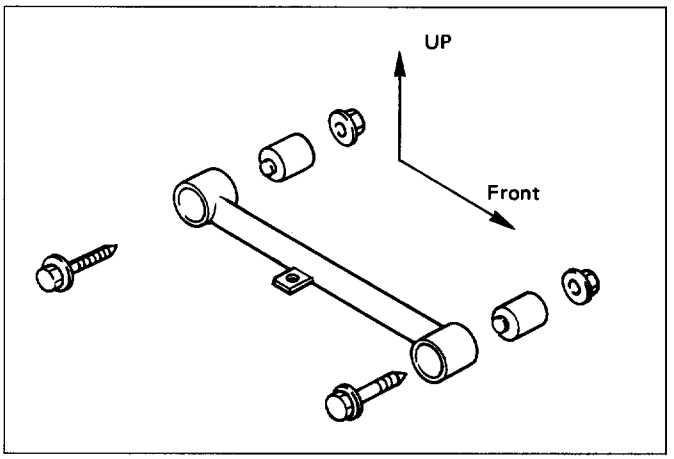

Fig. 3D-14

LATERAL ROD

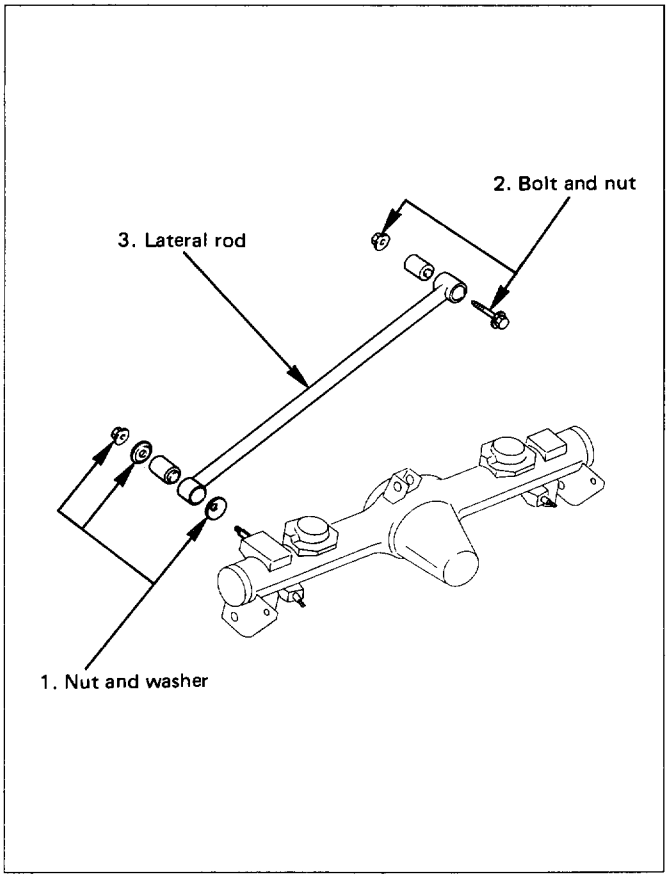

Fig. 3D-15

REMOVAL

1. **Nut and washer**
2. **Bolt and nut**
3. **Lateral rod**

INSPECTION AND REPAIR

Make necessary correction or parts replacement if wear, damage, corrosion or any other abnormal condition are found through inspection.

1. **Lateral rod**
2. **Rubber bushing (Frame side)**
   - Remove the rubber bushing (Frame side) (Fig. 3D-16).

Remover: J-39215

   - Install the rubber bushing (Frame side) (Fig. 3D-17).

Installer: J-39215

NOTE:
When mounting rubber bushings, do not use grease on bushings or any other nearby parts.

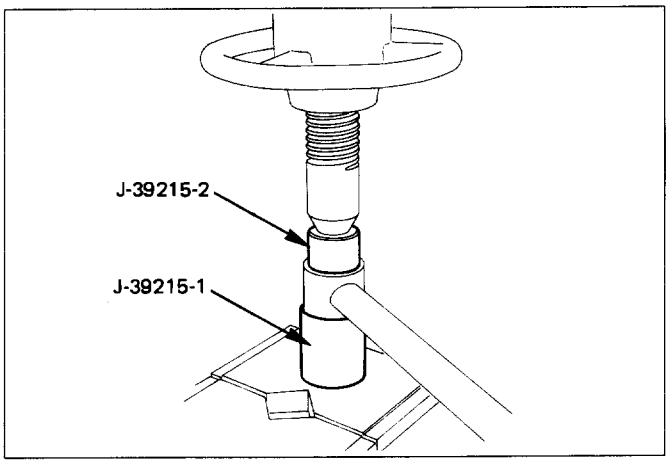

Fig. 3D-16

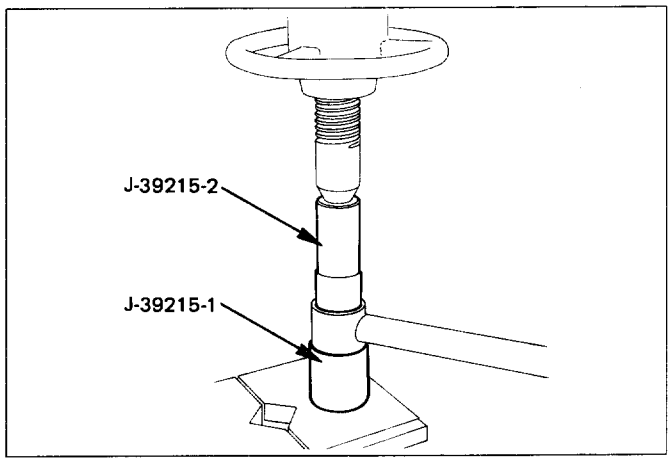

Fig. 3D-17

3. **Rubber bushing (Axle side)**
   - Remove the rubber bushing (Axle side) (Fig. 3D-18).

Remover: J-39792

   - Install the rubber bushing (Axle side) (Fig. 3D-19).

Installer: J-39792

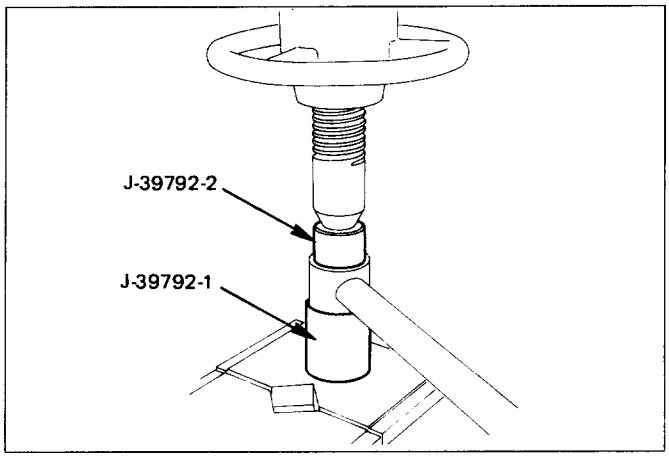

Fig. 3D-18

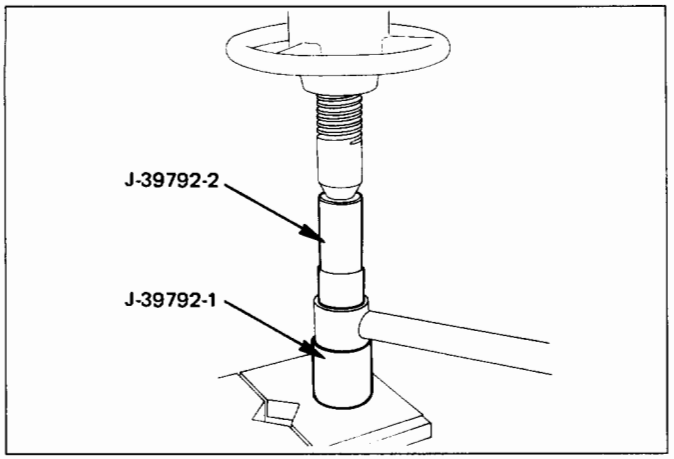

Fig. 3D-19

INSTALLATION

3. Lateral rod

- Make sure that the lateral rod is in its correct position (Fig. 3D-20).

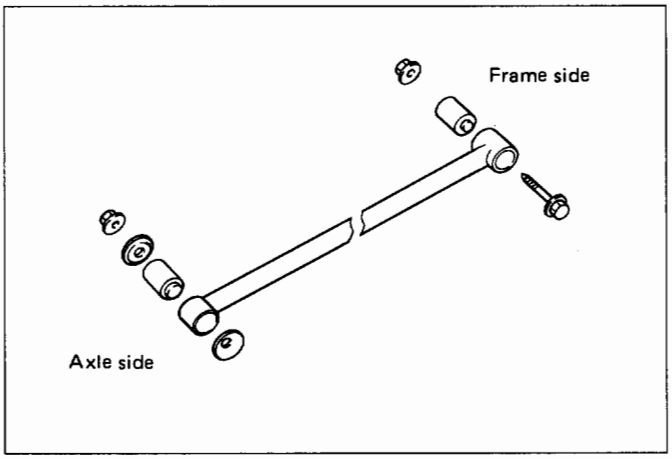

Fig. 3D-20

NOTE:
When mounting lateral rod, be sure not to use grease on bushings or any other nearby part.

2. Bolt and nut

NOTE:
Tighten the bolt and nut lightly, and retighten to the specified torque after the vehicle is at curb height.

	Torque N·m (lb·ft)	137 (101)

1. Nut and washer

NOTE:
Tighten the nut lightly, and retighten to the specified torque after the vehicle is at curb height.

	Torque N·m (lb·ft)	78 (58)

STABILIZER BAR

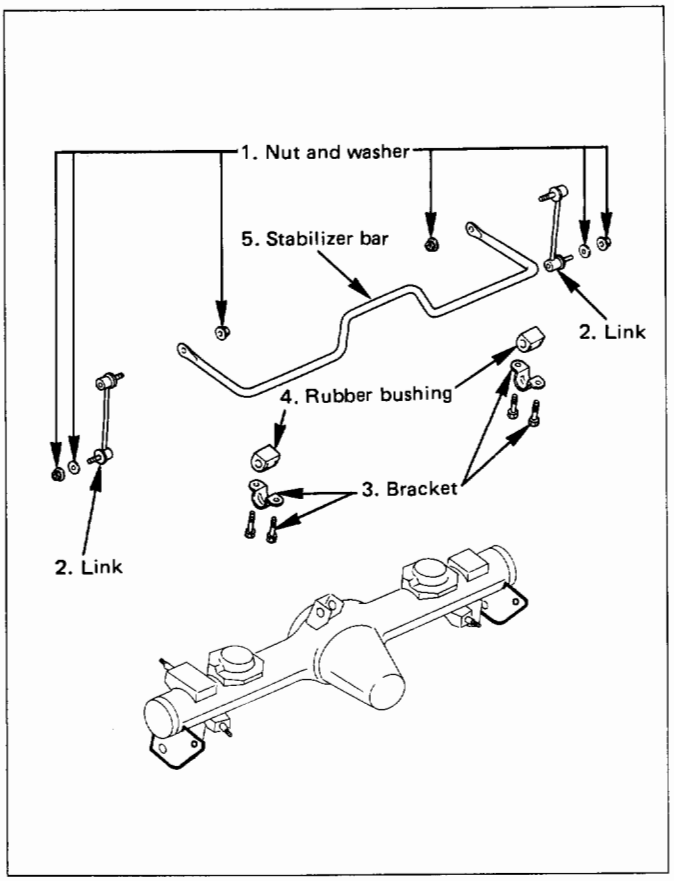

Fig. 3D-21

REMOVAL

Preparation:
- Raise the vehicle and support the frame with suitable safety stands.
- Remove wheel and tire assembly. Refer to "Wheels and tires" in section 3E.

1. Nut and washer

2. Link

CAUTION:
Be careful not to break the ball joint boot.

3. Bracket

4. Rubber bushing

5. Stabilizer bar

INSPECTION AND REPAIR

Make necessary correction or parts replacement if wear, damage, corrosion or any other abnormal condition are found through inspection.

- Stabilizer bar
- Rubber bushing
- Link ball joint

INSTALLATION

5. **Stabilizer bar**
4. **Rubber bushing**
3. **Bracket**

Torque	N·m (lb·ft)	22 (16)

2. **Link**
1. **Nut and washer (Fig. 3D-22)**

Torque	N·m (lb·ft)	50 (37)

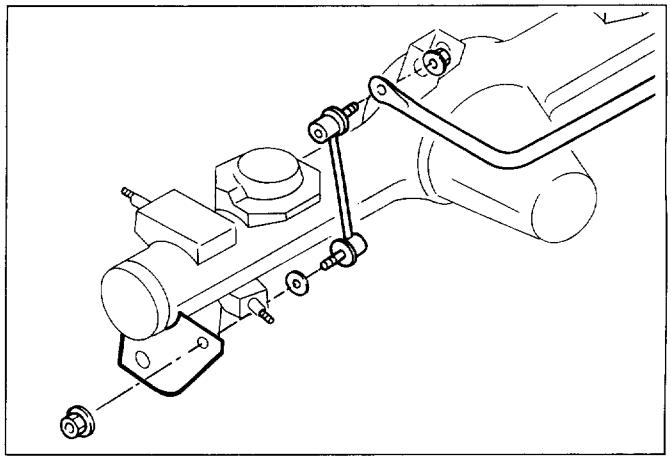

Fig. 3D-22

MAIN DATA AND SPECIFICATIONS

GENERAL SPECIFICATIONS

Rear suspension Type		4-Link, coil spring type with stabilizer bar.	
Coil spring		LWB	SWB
Free length	mm(in)	402 (15.83)	408.5 (16.08)
Spring diameter	mm(in)	12.7 (0.5)	10.2 – 13.4 (0.40 – 0.53)
Coil diameter (inner)	mm(in)	105 (4.13)	105 (4.13)
Effective No. of turns		5.32	7.52
Total No. of turns		6.82	9.02
Shock absorber Type		Hydraulic, double acting, telescopic	
Piston diameter	mm(in)	25.0 (0.98)	
Stroke	mm(in)	175 (6.89)	170 (6.69)
Extended length	mm(in)	489 (19.25)	
Compressed length	mm(in)	314 (12.36)	319 (12.56)
Stabilizer bar Diameter		19.0 (0.75)	

TORQUE SPECIFICATIONS

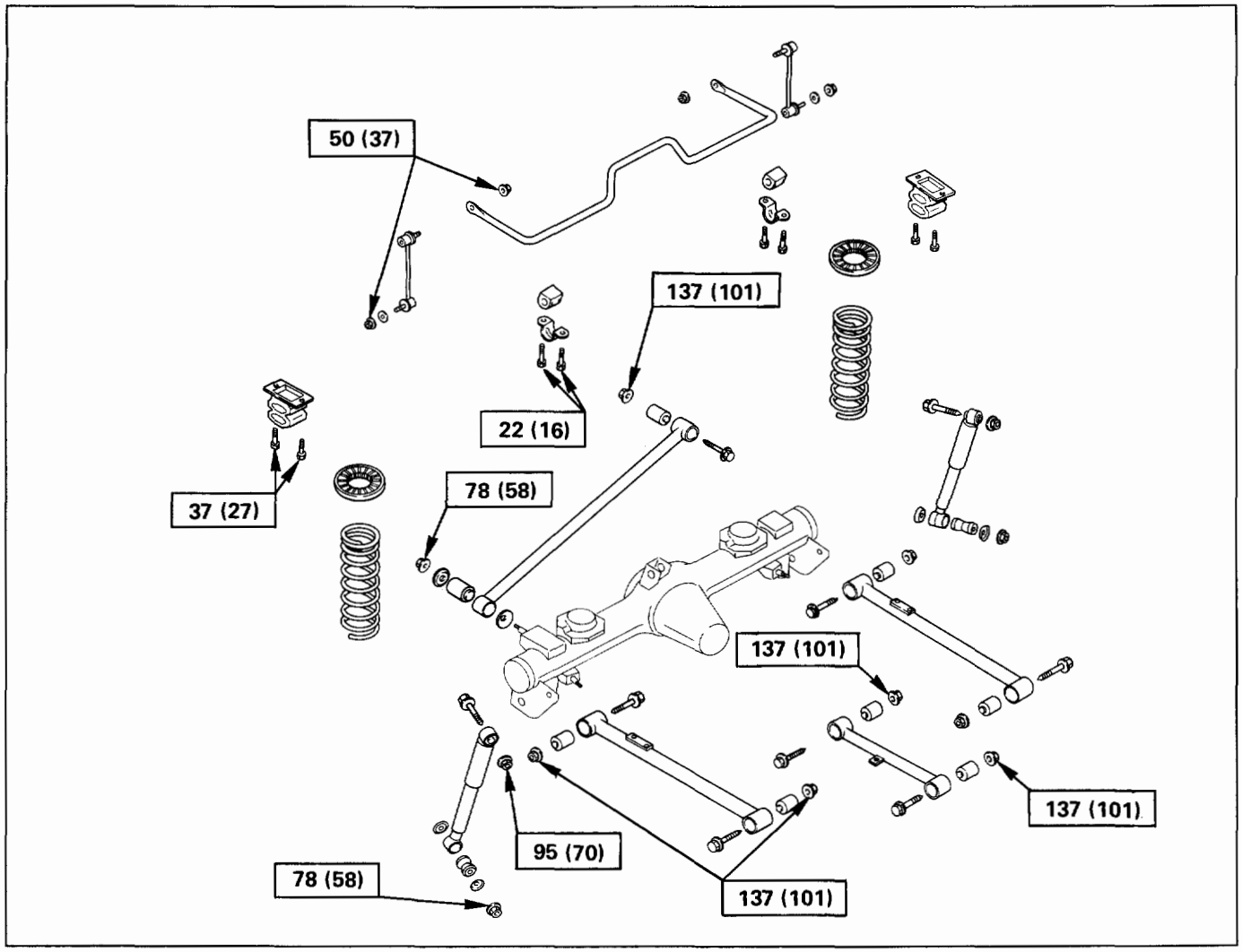

Fig. 3D-23

SPECIAL TOOLS

ILLUSTRATION	TOOL NO. TOOL NAME
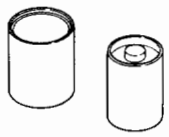	**J-39214** Remover and Installer: Trailing center link bushing
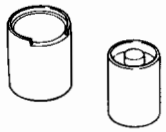	**J-39792** Remover and Installer: Lateral rod bushing (axle side)

ILLUSTRATION	TOOL NO. TOOL NAME
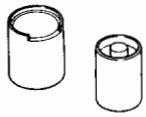	**J-39215** Remover and Installer: Lateral rod bushing

MEMO

SECTION 3E

WHEELS AND TIRES

CAUTION:
When fasteners are removed, always reinstall them at the same location from which they were removed. If a fastener needs to be replaced, use the correct part number fastener for that application. If the correct part number fastener is not available, a fastener of equal size and strength (or stronger) may be used. Fasteners that are not reused, and those requiring thread locking compound, will be called out. The correct torque value must be used when installing fasteners that require it. If the above conditions are not followed, parts or system damage could result.

CONTENTS

General Description 3E-1
Diagnosis 3E-2
  Irregular and Premature Wear 3E-2
  Inflation of Tires 3E-3
  Diagnosis List 3E-3
On-Vehicle Service 3E-6
  Wheels 3E-6
Unit Repair 3E-7
  Tires 3E-7
  Wheels 3E-7
  General Balance Procedure 3E-8
  Balancing Wheel and Tire 3E-8
Main Data and Specifications 3E-9
  General Specifications 3E-9
  Torque Specifications 3E-9

GENERAL DESCRIPTION

Replacement wheels or tires must be equivalent to the originals in load capacity, specified dimension and mounting configuration. Improper size or type may affect bearing life, brake performance, speedometer/odometer calibration, vehicle ground clearance and tire clearance to the body and chassis.

All model are equipped with metric sized tubeless steel belted radial tires. Correct tire pressures and driving habits have an important influence on tire life. Heavy cornering, excessively rapid acceleration and unnecessary sharp braking increase premature and uneven wear.

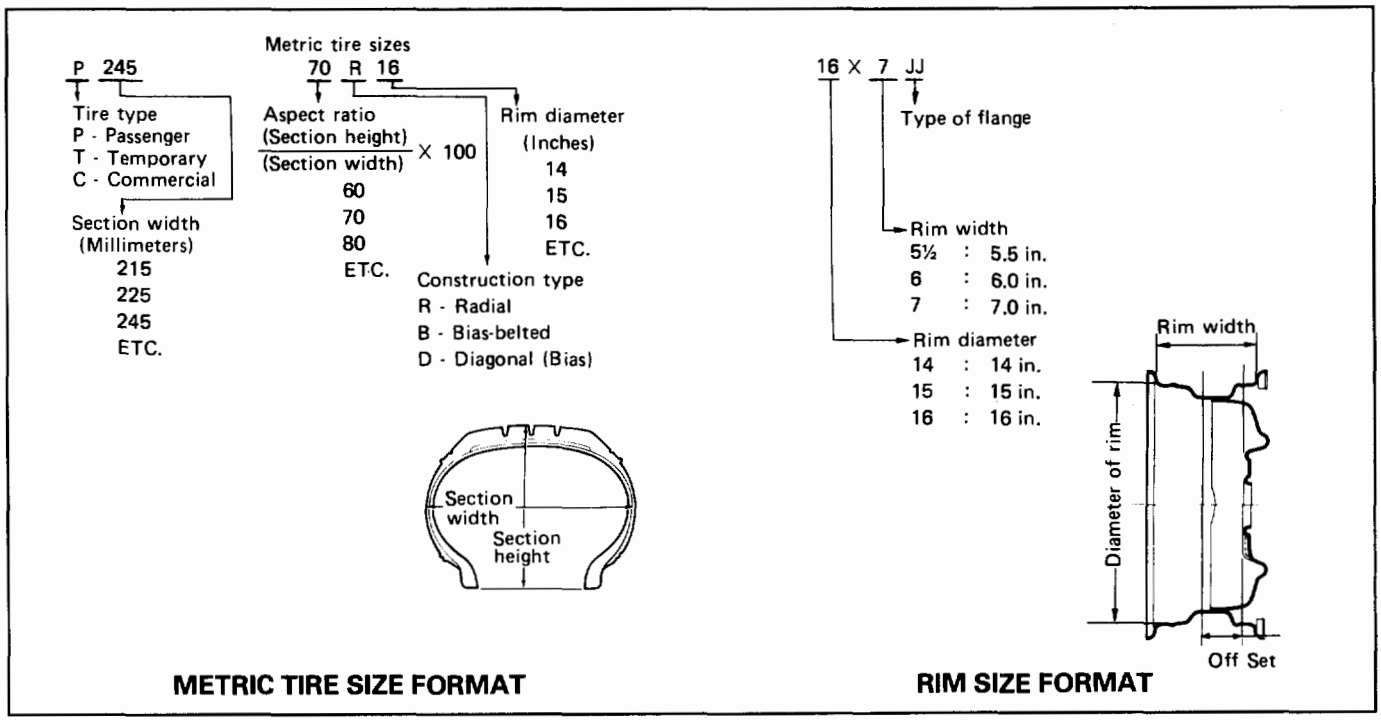

Fig. 3E-1

DIAGNOSIS

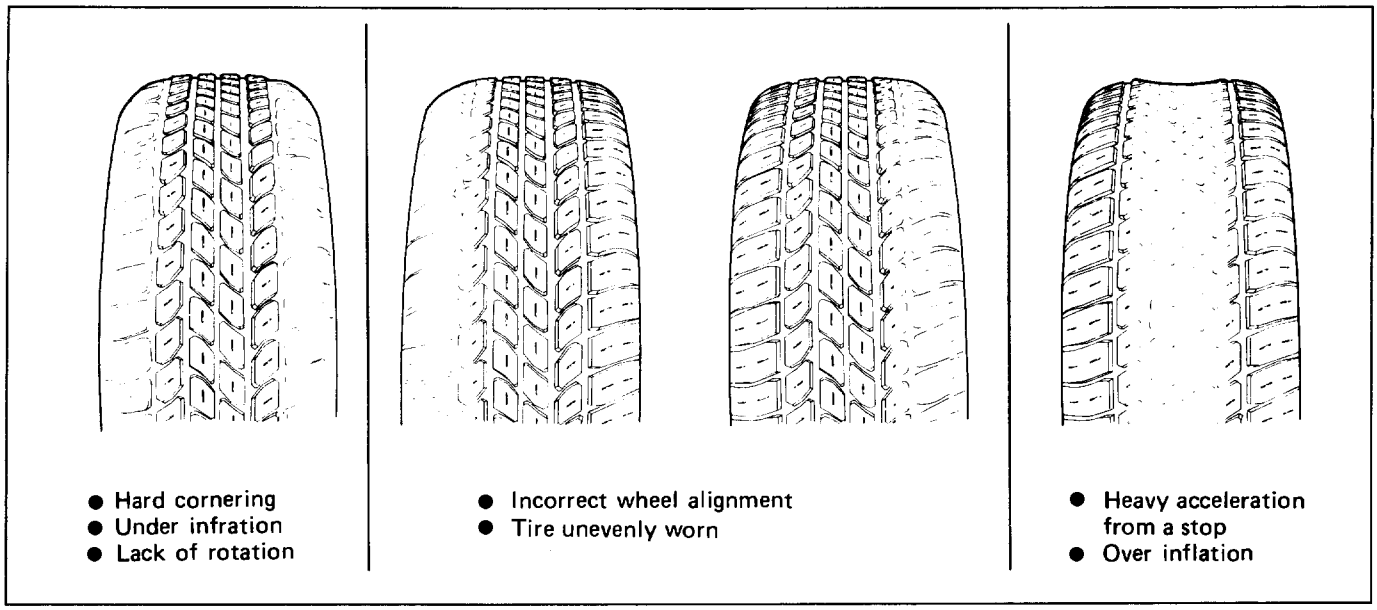

Fig. 3E-2

IRREGULAR AND PREMATURE WEAR (Fig. 3E-2)

Irregular and/or premature wear has many causes. Some of them are incorrect inflation pressures, lack of tire rotation, poor driving habits or improper wheel alignment. Incorrect inflation is common cause of tire premature wear.

NOTE:
Due to their design, radial tires tend to wear faster in the shoulder area, particularly on the front tires. This makes regular rotation especially necessary. After rotation, be sure to check wheel nut torque, and set tire pressures.

TIRE ROTATION

Tire rotation is recommended to equalize wear for longer tire life (Fig. 3E-3).

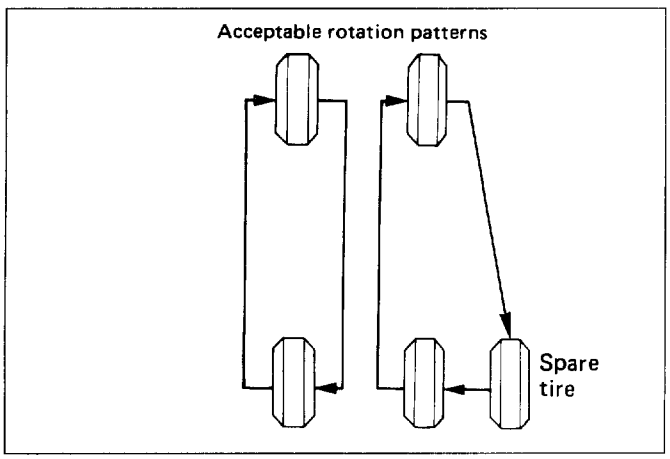

Fig. 3E-3

If the following conditions are noted, rotate the tires:

- Front tire wear is different from rear.
- Uneven wear exists across the tread of any tire.
- Left and right front tire wear is unequal.
- Left and right rear tire wear is unequal.

Check wheel alignment if the following conditions are noted:

- Left and right front tire wear is unequal.
- Wear is uneven across the tread of any front tire.
- Front tire treads have a scuffed appearance with "feather" edges on one side of the tread ribs or blocks.

TREAD WEAR INDICATORS (Fig. 3E-4)

The original equipment tires have built-in tread wear indicators to show when tires need replacement. These indicators may appear as wide bands. When the indicators appear in two or more grooves at three locations, tire replacement is recommended.

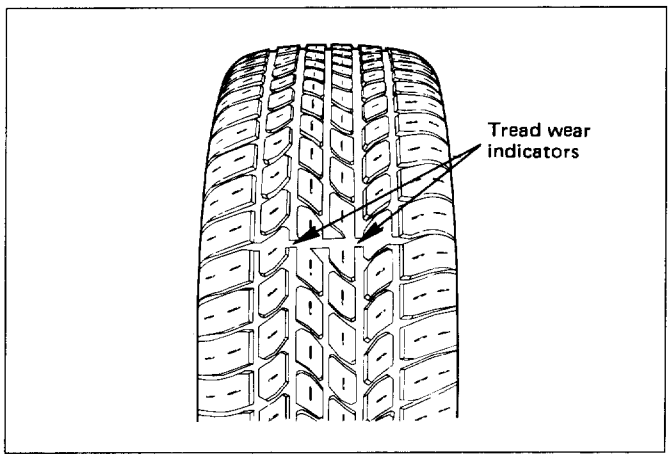

Fig. 3E-4

INFLATION OF TIRES

Tire pressure, in cold condition (after vehicle has set for three hours or more, and driven less than one mile), should be checked monthly or before any extended trip. Tire pressure increases approximately 15% when the tires become hot during driving. Tire pressure specification is shown on the label located on the left door lock pillar (Fig. 3E-5).

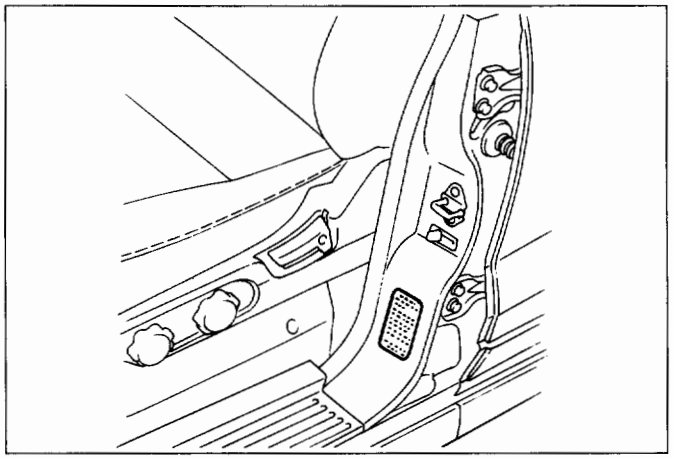

Fig. 3E-5

NOTE:
Check the tire pressure whenever irregular wear is found. Tire inflation greatly affects tire wear. If the alignment check does not reveal any alignment problems, check the condition of the shock absorbers and wheel/tire balance.

DIAGNOSIS LIST

If the following conditions are noted, rotation is required.

1. Front tire wear is different from rear.
2. Uneven wear exists across the tread of any tire.
3. Left and right front tire wear is unequal.
4. Left and right rear tire wear is unequal.

If the following conditions are noted, check the wheel alignment.

1. Left and right front tire wear is unequal.
2. Uneven wear exists across the tread of any tire.
3. Front tire treads have scuffed appearance with "feather" edges on one side of tread ribs or blocks.
4. There is cupping, flat spotting etc.

Higher than recommended pressure can cause:

1. Hard ride.
2. Poor steering stability.
3. Rapid and uneven wear at center of the tread.

Lower than recommended pressure can cause:

1. Tire squeal on turns.
2. Hard steering.
3. Rapid and uneven wear on the edges of the tread.
4. Tire rim bruises and rupture.
5. Tire cord breakage.
6. High tire temperatures.
7. Reduced handling.
8. Reduced fuel economy.

Unequal pressure on same axle can cause:

1. Uneven braking
2. Steering lead.
3. Reduced handling.
4. Swerve on acceleration

Typical examples of abnormal tire tread wear and major causes:

CAUTION: Similar wear patterns can be caused by worn suspension parts, misalignment or wheels and tires, and other suspension related problems.

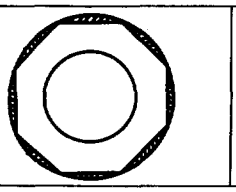

Spotty wear — wear localized on shoulder sections, and in an extreme cases, the tire becomes polygonal in shape.

- Tire or wheel out of round or distorted.
- Hub or knuckle out of round or distorted.
- Play in hub bearings or ball joint
- Rotating parts out of balance

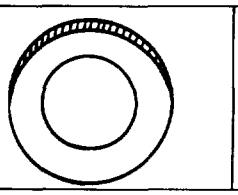

Tread wear one-sided

- Rotating parts out of balance
- Tire or wheel out of round
- Hub or knuckle out of round or distorted

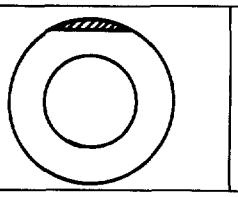

Localized tread wear

- Once spotty wear develops in tread due to hard braking or abrupt starting, localized wear tends to be promoted.

Fig. 3E-6

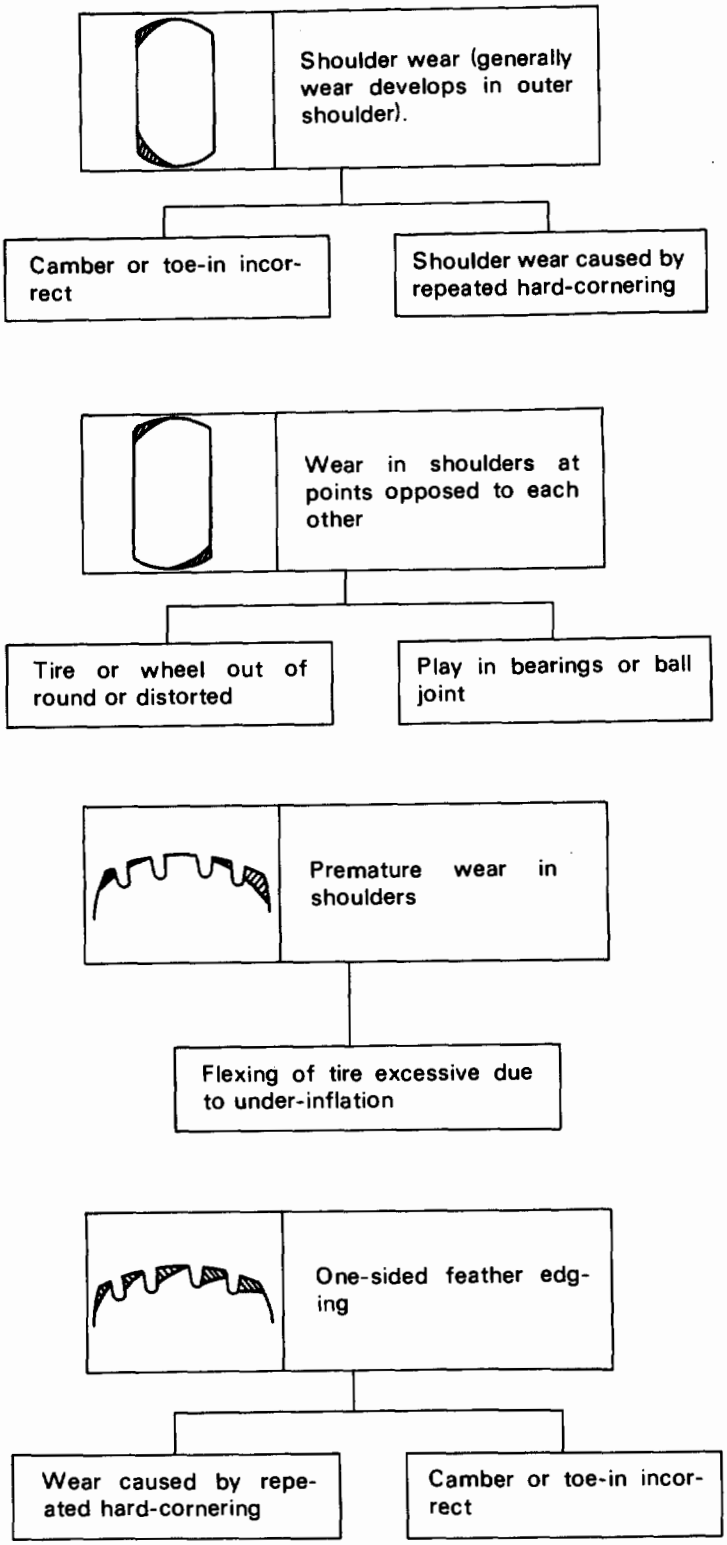
Shoulder wear (generally wear develops in outer shoulder).
Camber or toe-in incorrect
Shoulder wear caused by repeated hard-cornering
Wear in shoulders at points opposed to each other
Tire or wheel out of round or distorted
Play in bearings or ball joint
Premature wear in shoulders
Flexing of tire excessive due to under-inflation
One-sided feather edging
Wear caused by repeated hard-cornering
Camber or toe-in incorrect

Fig. 3E-7

ON-VEHICLE SERVICE

WHEELS

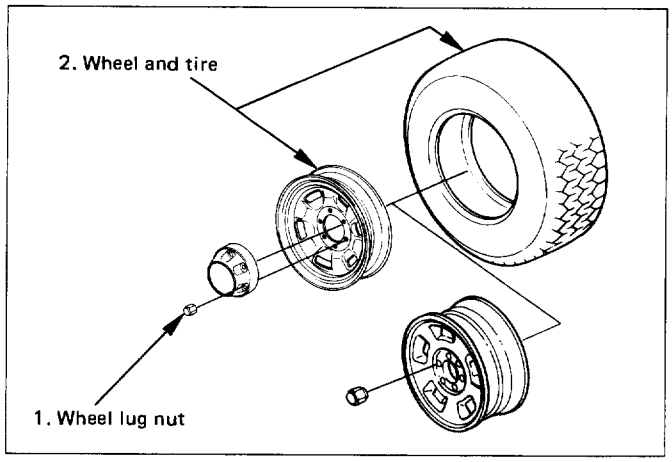

Fig. 3E-8

REMOVAL

1. **Wheel lug nut**
   - Loosen wheel nut by approximately 180° (half a rotation) and raise the vehicle. Then remove the nuts.
2. **Wheel and tire**

NOTE:
Never use heat to loosen a tight wheel lug nut. The application of heat to the hub can shorten the life of the wheel and may cause damage to wheel bearings.

INSTALLATION

2. **Wheel and tire**
1. **Wheel lug nut**
   - Tighten the wheel lug nuts to the specified torque in numerical order (Fig. 3E-9).

Torque N·m (lb·ft)	118 (87)

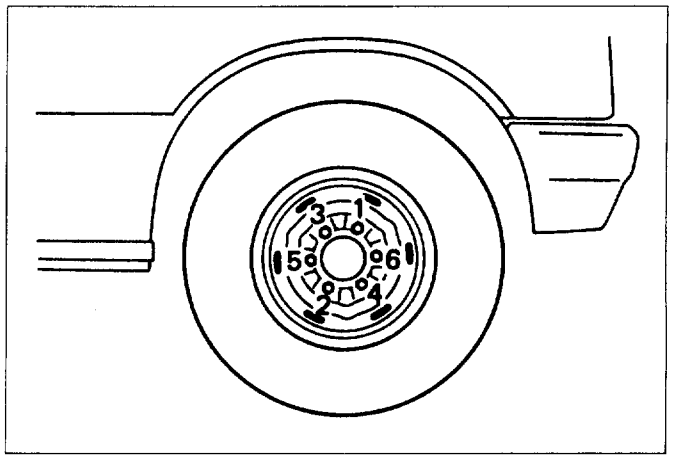

Fig. 3E-9

CAUTION:
Before installing wheels, remove any build-up of corrosion on the wheel mounting surface and brake disc mounting surface by scraping and wire brushing. Installing wheels without good metal-to-metal contact at mounting surfaces can cause wheel nuts to loosen, which can later allow a wheel to come off while the vehicle is moving.

NOTE:
Valve caps should be on the valve stems to keep dust and water out.

UNIT REPAIR

TIRES

REPLACEMENT

When replacement is necessary, the original metric the size should be used. Most metric tire sizes do not have exact corresponding alphanumeric tire sizes. It is recommended that new tires be installed in pairs on the same axle. If necessary to replace only one tire, it should be paired with tire having the most tread, to equalize braking traction.

CAUTION:
Do not mix different types of tires such as radial, bias and bias-belted tires except in emergencies, because vehicle handling may be seriously affected and may result in loss of control.

TIRE DISMOUNTING

Remove valve cap on valve step and deflate the tire. Then use a tire changing machine to mount or dismount tires.
Follow the equipment manufacturer's instruction. Do not use hand tools or tire lever alone to change tires as they may damage the tire beads or wheel rim.

TIRE MOUNTING

Rim bead seats should be cleaned with a wire brush or coarse steel wool to remove lubricants, and light rust. Before mounting a tire, the bead area should be well lubricated with an approved tire lubricant.
After mounting, inflate the tire to 196kPa (28 psi) so that beads are completely seated. Inflate the air to specified pressure and install valve cap to the stem.

WARNING:
Never stand over tire when inflating. Bead may break when bead snaps over rim's safety hump and cause serious personal injury.
Never exceed 240 kPa (35 psi) pressure when inflating. If 240 kPa (35 psi) pressure will not seat beads, deflate, re-lubricate and re-inflate. Over inflation may cause the bead to break and cause serious personal injury.

TIRE REPAIR

There are many different materials on the market used to repair tires.
Manufacturers have published detailed instructions on how and when to repair tires. These instructions can be obtained from the tire manufacturer if they are not included with the repair kit.

WHEELS

REPLACEMENT

Damaged wheels and wheels with excessive run-out must be replaced.

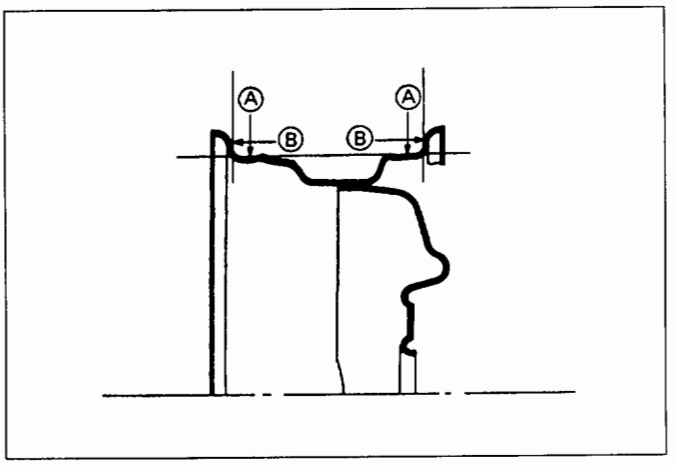

Fig. 3E-10

Wheel run-out at rim

	Steel	Aluminum
Ⓐ Vertical play: Less than mm (in)	1.5 (0.059)	0.7 (0.028)
Ⓑ Horizontal play: Less than mm (in)	1.5 (0.059)	0.7 (0.028)

GENERAL BALANCE PROCEDURE

Deposits of mud, etc. must be cleaned from the inside of the rim.

The tire should be inspected for the following: match mount paint marks, bent rims, bulges, irregular tire wear, proper wheel size and inflation pressure. Then balance according to the equipment manufacturer's recommendations.

There are two types of wheel and tire balance.

Static balance is the equal distribution of weight around the wheel.

Assemblies that are statically unbalanced cause a bouncing action called tramp. This condition will eventually cause uneven tire wear (Fig. 3E-11).

Dynamic balance is the equal distribution of weight on each side of the wheel center-line so that when the tire spins there is no tendency for the assembly to move from side to side. Assemblies that are dynamically unbalanced may cause shimmy (Fig. 3E-12).

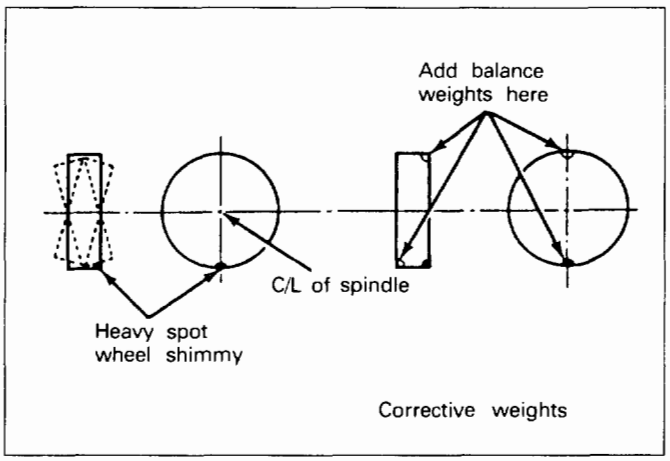

Fig. 3E-11

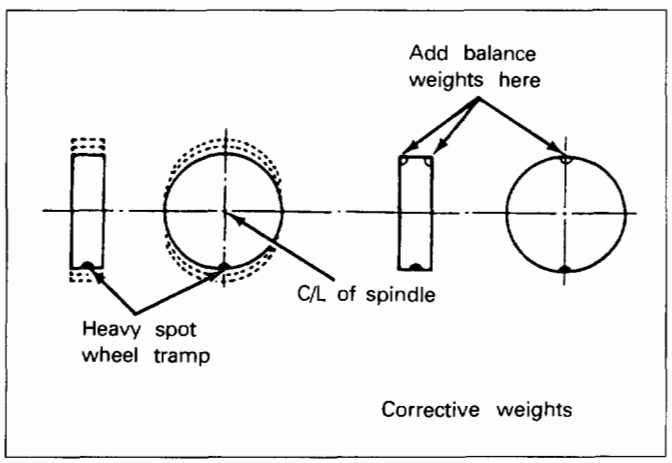

Fig. 3E-12

WARNING
Stones should be removed from the tread to avoid operator injury during spin balancing and to obtain a good balance.

BALANCING WHEEL AND TIRE ON-VEHICLE BALANCING

On-Vehicle balancing methods vary with equipment and tool manufacturers. Be sure to follow each manufacturer's instructions during balancing operation.

OFF-VEHICLE BALANCING

Most electronic off-vehicle balancers are more accurate than the on-vehicle spin balancers. They are easy to use and give a dynamic balance. Although they do not correct for drum or disc unbalance (as on-vehicle spin balancing does), they are very accurate (Fig. 3E-13).

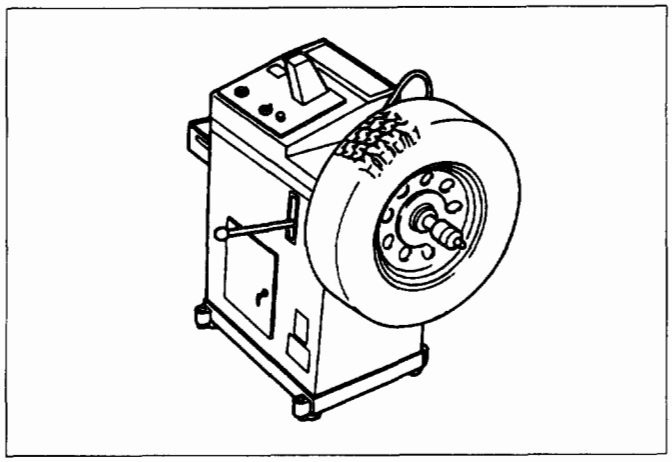

Fig. 3E-13

MAIN DATA AND SPECIFICATIONS

GENERAL SPECIFICATIONS

Wheels		
Size		16 x7JJ
Offset	mm (in)	38.0 (1.50)
P.C.D., wheel studs	mm (in)	139.7 (5.50)
Standard tire		
Size		P245/70R16
Pressure		
Front	kPa (psi)	210 (30)
Rear	kPa (psi)	240 (35)

TORQUE SPECIFICATIONS

N·m (lb·ft)

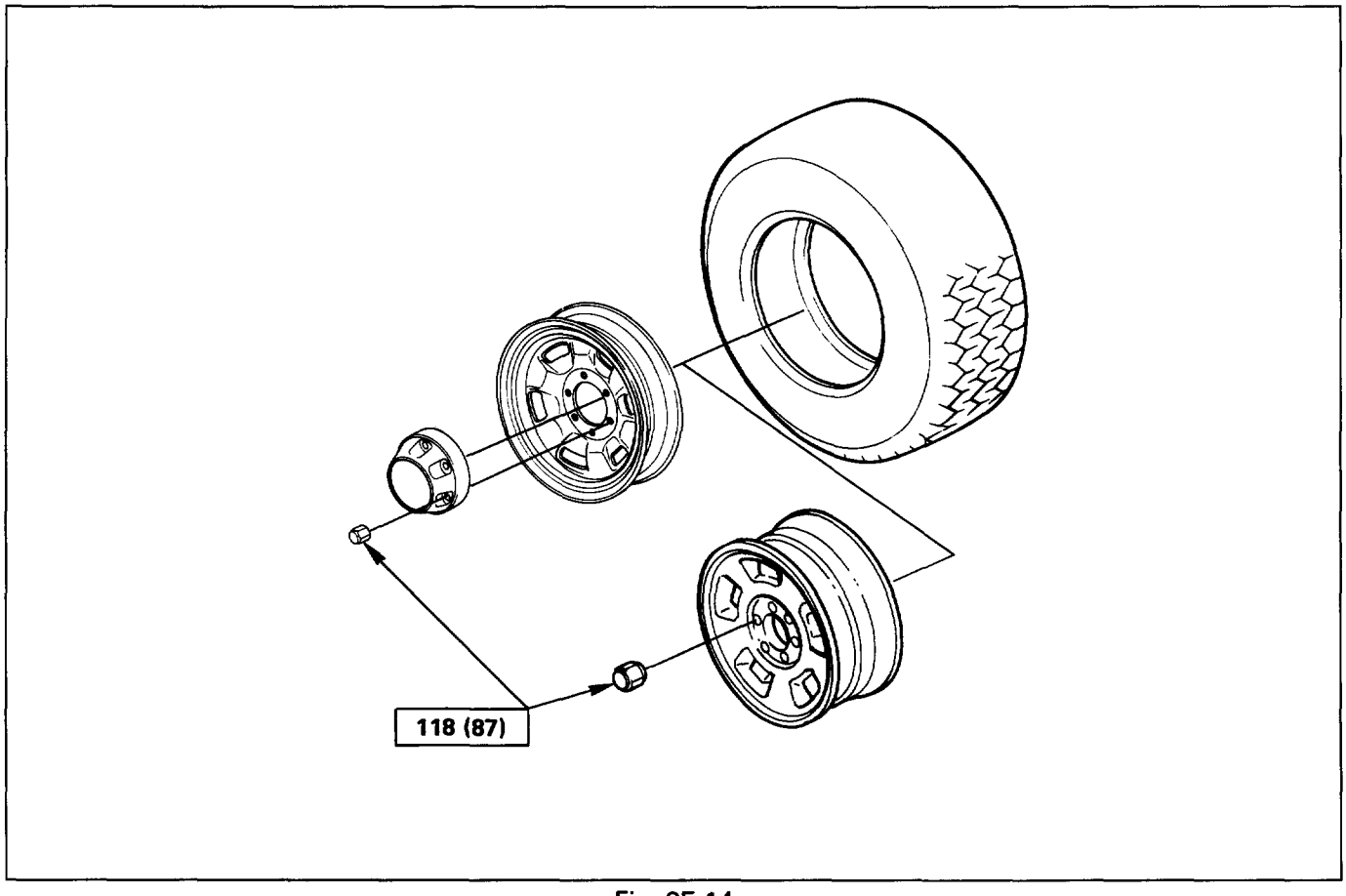

Fig. 3E-14

MEMO

SECTION 3F4

SUPPLEMENTAL RESTRAINT SYSTEM STEERING WHEEL & COLUMN

CAUTION:

When fasteners are removed, always reinstall them at the same location from which they were removed. If a fastener needs to be replaced, use the correct part number fastener for that application. If the correct part number fastener is not available, a fastener of equal size and strength (or stronger) may be used. Fasteners that are not reused, and those requiring thread locking compound, will be called out. The correct torque value must be used when installing fasteners that require it. If the above conditions are not followed, parts or system damage could result.

CONTENTS

General Description 3F4– 1
On-Vehicle Service 3F4– 2
Special Service Precaution 3F4– 2
Inflator Module Replacement 3F4– 3
Steering Wheel Replacement 3F4– 4
Combination Switch Replacement 3F4– 7
Lock Cylinder Replacement 3F4–10
Steering Column Replacement 3F4–13
Main Data and Specifications 3F4–17
Torque Specifications 3F4–17
Special Tools 3F4–17

GENERAL DESCRIPTION

WARNING

TO AVOID DEPLOYMENT WHEN TROUBLE-SHOOTING THE SRS SYSTEM, DO NOT USE ELECTRICAL TEST EQUIPMENT, SUCH AS BATTERY-POWERED OR A/C-POWERED VOLT-METER, OHMMETER, ETC., OR ANY TYPE OF ELECTRICAL EQUIPMENT OTHER THAN SPE-CIFIED IN THIS MANUAL. DO NOT USE A NON-POWERED PROBE-TYPE TESTER.

INSTRUCTION IN THIS MANUAL MUST BE FOLLOWED CAREFULLY, OTHERWISE PER-SONAL INJURY MAY RESULT.

This steering wheel and column repair section covers the Supplemental Restraint System (SRS) steering column. The following repair procedures are specific to SRS Components. When servicing a vehicle equipped with Supplemental Restraint System, pay close attention to all WARNINGS and CAUTIONS.

For detailed explanation about SRS, refer to Section 9J "SUPPLEMENTAL RESTRAINT SYSTEM (SRS)" of this manual.

The steering column has three important features in addition to the steering function:

1. The column is energy absorbing, designed to compress in a front-end collision to minimize the possibility of injury to the driver of the vehicle.
2. The ignition switch and lock are mounted conveniently on the column.
3. With the column mounted lock, the ignition and steering operation can be locked to prevent theft of the vehicle.

The column may be disassembled and reassembled. To insure the energy absorbing action, it is important that the specified screws, bolts and nuts be used only as designated and that they are tightened to the specified torque.

When the column is removed from the vehicle, a sharp blow on the end of steering shaft or shift lever, leaning on the column assembly, or dropping the assembly could shear or loosen the fasteners that maintain column rigidity.

ON-VEHICLE SERVICE

SPECIAL SERVICE PRECAUTIONS

CAUTION:

Safe handling of Inflator modules requires following the procedures described below for both live and deployed modules.

WARNING

SAFETY PRECAUTIONS MUST BE FOLLOWED WHEN HANDLING A DEPLOYED INFLATOR MODULE (AIR BAG). AFTER DEPLOYMENT, THE INFLATOR MODULE (AIR BAG) SURFACE MAY CONTAIN A SMALL AMOUNT OF SODIUM HYDROXIDE, A BY-PRODUCT OF THE DEPLOYMENT REACTION, THAT IS IRRITATING TO THE SKIN AND EYES. MOST OF THE POWDER ON THE INFLATOR MODULE (AIR BAG) IS HARMLESS. AS A PRECAUTION, WEAR GLOVES AND SAFETY GLASSES WHEN HANDLING A DEPLOYED INFLATOR MODULE (AIR BAG), AND WASH YOUR HANDS WITH MILD SOAP AND WATER AFTERWARDS.

WHEN CARRYING A LIVE INFLATOR MODULE (AIR BAG), MAKE SURE THE BAG AND TRIM COVER ARE POINTED AWAY FROM YOU. NEVER CARRY AN INFLATOR MODULE (AIR BAG) BY THE WIRES OR CONNECTOR ON THE UNDERSIDE OF MODULE. IN THE CASE OF AN ACCIDENTAL DEPLOYMENT, THE BAG WILL THEN DEPLOY WITH MINIMAL CHANCE OF INJURY. WHEN PLACING A LIVE INFLATOR MODULE (AIR BAG) ON A BENCH OR OTHER SURFACE, ALWAYS FACE THE BAG AND TRIM COVER UP, AWAY FROM THE SURFACE.

NEVER REST A STEERING COLUMN ASSEMBLY ON THE STEERING WHEEL WITH THE INFLATOR MODULE (AIR BAG) FACE DOWN AND COLUMN VERTICAL. THIS IS NECESSARY SO THAT A FREE SPACE IS PROVIDED TO ALLOW THE INFLATOR MODULE (AIR BAG) TO EXPAND IN THE UNLIKELY EVENT OF ACCIDENTAL DEPLOYMENT. OTHERWISE, PERSONAL INJURY COULD RESULT.

For detailed explanation about SRS, refer to Section 9J "SUPPLEMENTAL RESTRAINT SYSTEM (SRS)" of this manual.

SRS CONNECTORS

CAUTION:

Double-lock type yellow color connectors are used for supplemental restraint system-air bag circuit.

When removing the cable harness, disconnect the connector by unlocking at two places, outside ① and inside ②. In such a case, do not pull the cables. Otherwise, cable disconnection may occur.

When connect the double lock type SRS connector, insert the connector completely and lock at outside. Imperfect locking may cause malfunction of SRS circuit. (Fig. 3F4-1)

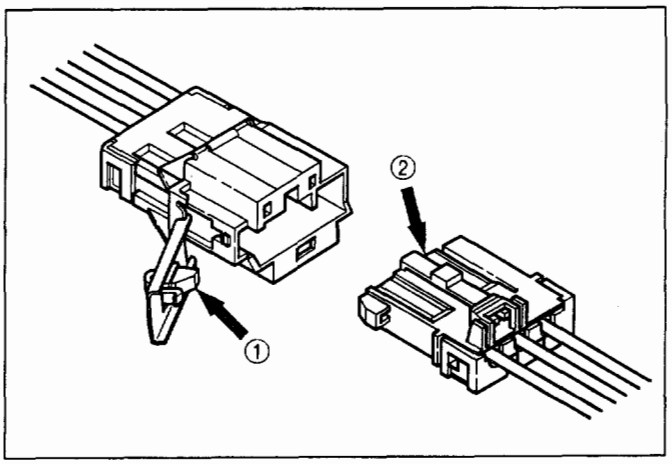

Fig. 3F4-1

INFLATOR MODULE REPLACEMENT

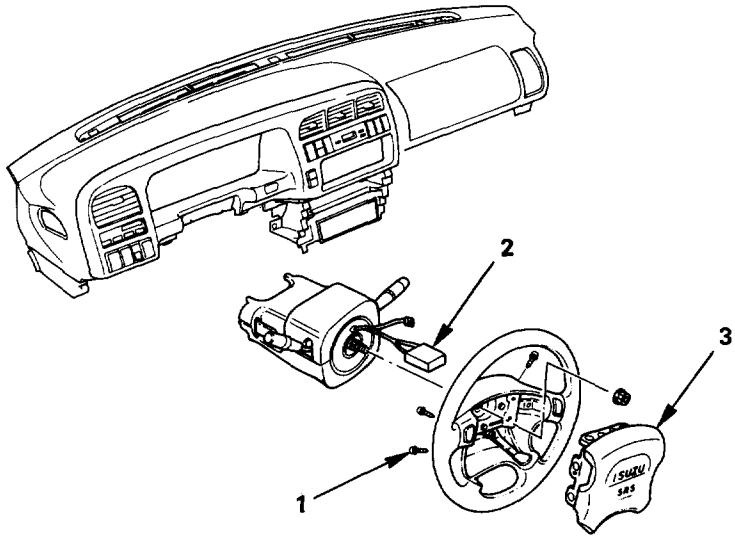

Removal steps
1. Fixing bolt
2. Module connector
3. Inflator module

Installation steps
To install, follow the removal steps in the reverse order.

Fig. 3F4-2

REMOVAL

Preparation:
- Turn the steering wheel so that the vehicle's wheels are pointing straight ahead.
- Turn the ignition switch to "LOCK".
- Disconnect the battery "–" terminal cable, and wait at least 5 minutes.
- Disconnect the yellow 3way SRS connector located under the steering column.

1. **Fixing bolt**
   - Loosen the inflator module fixing bolt from behind the steering wheel assembly using a TORX® driver or equivalent until the inflator module can be released from steering assembly (Fig. 3F4-3).
2. **Module connector**
   - Disconnect the yellow 2way SRS connector located behind the inflator module (Fig. 3F4-4).
3. **Inflator module**

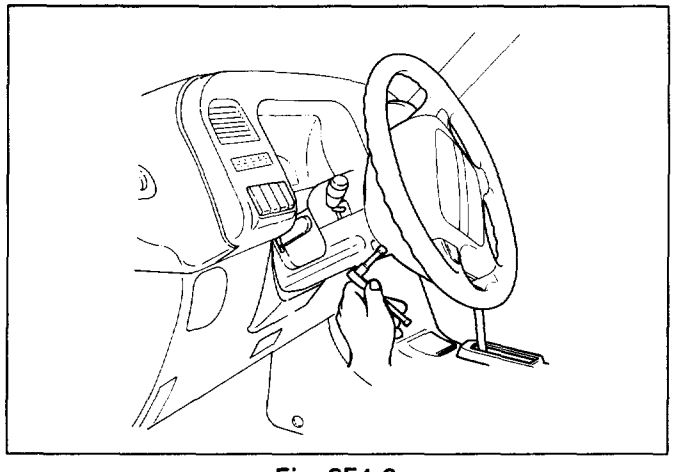

Fig. 3F4-3

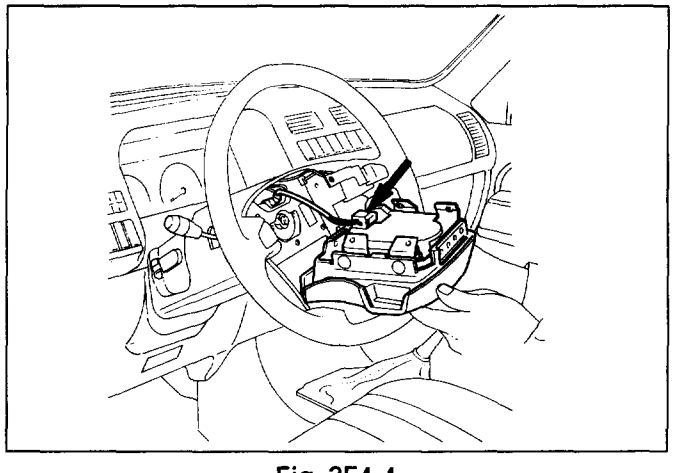

Fig. 3F4-4

INSPECTION AND REPAIR

WARNING

THE INFLATOR MODULE SHOULD ALWAYS BE CARRIED WITH THE URETHANE COVER AWAY FROM YOUR BODY AND SHOULD ALWAYS BE LAID ON A FLAT SURFACE WITH THE URETHANE SIDE UP. THIS IS NECESSARY BECAUSE A FREE SPACE IS PROVIDED TO ALLOW THE AIR CUSHION TO EXPAND IN THE UNLIKELY EVENT OF ACCIDENTAL DEPLOYMENT. OTHERWISE, PERSONAL INJURY MAY RESULT (FIG. 3F4-5).

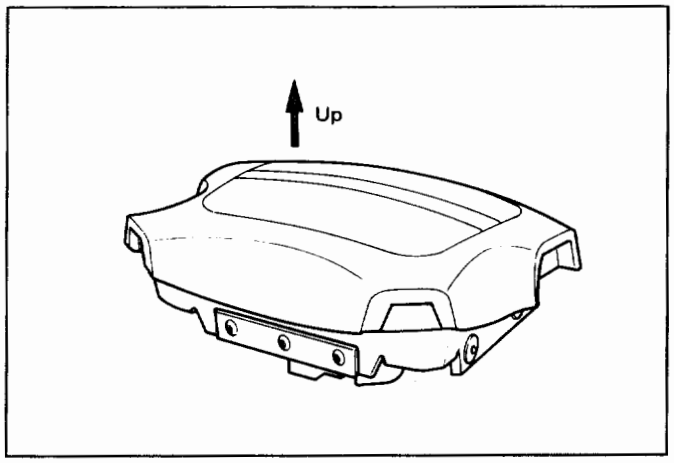

Fig. 3F4-5

The Inflator module consists of a cover, air bag, inflator, and retainer. Inspect the Inflator module mainly for the following:

1) Check for holes, cracks, severe blemishes and deformation on the cover.
2) Check that the retainer is not deformed.
3) Check for defects such as damage and breakage in the lead wire of the squib.

If an abnormality is found as the result of the inspection, replace the Inflator module with a new one.

INSTALLATION

3. **Inflator module**
2. **Module connector**
   - Support the module and carefully connect the module connector.

   NOTE:

   Pass the lead wire through the tabs on the plastic cover (wire protector) of inflator to prevent lead wire from being pinched.

1. **Fixing bolt**
   - Secure the module with one bolt to relieve weight on the connector wire.
   - Tighten bolts to specified sequence as figure (Fig. 3F4-6).

Torque	N·m (lb·in.)	8 (69)

   - Connect the yellow 3way SRS connector located under the steering column.

- Connect the battery "–" terminal cable.
- Set ignition to "ON" while watching warning light. Light should flash 7 times and then go off. If lamp does not operate correctly, refer to Section 9J.

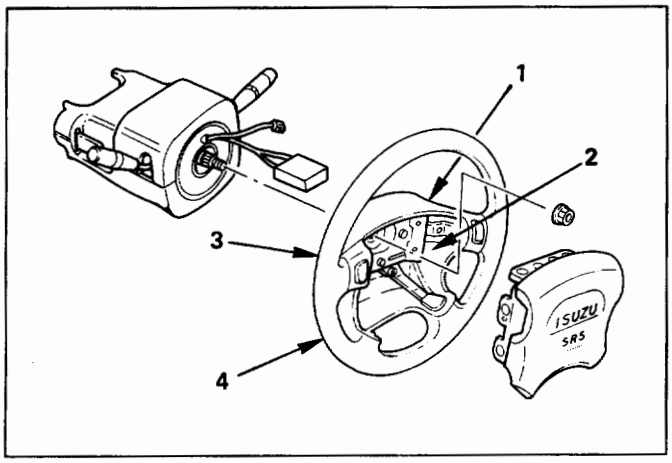

Fig. 3F4-6

STEERING WHEEL REPLACEMENT

CAUTION:

Once the steering column is removed from the vehicle, the column is extremely susceptible to damage. Dropping the column assembly on its end could collapse the steering shaft or loosen the slide block which maintains column rigidity. Leaning on the column assembly could cause the jacket to bend or deform. Any of the above damage could impair the column's collapsible design. If it is necessary to remove the steering wheel, use only the specified steering wheel puller. Under no conditions should the end of the shaft be hammered upon, as hammering could loosen slide block which maintains column rigidity.

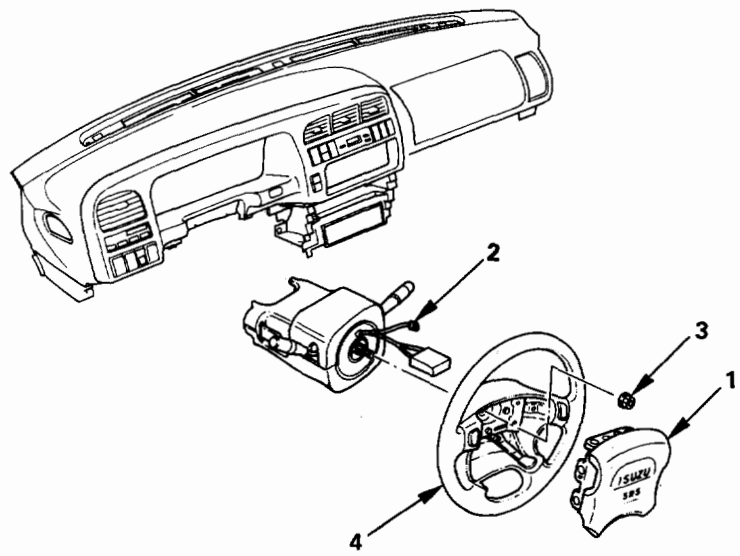

Removal steps
1. Inflator module
2. Horn lead
3. Steering wheel fixing nut
4. Steering wheel

Installation steps
To install, follow the removal steps in the reverse order.

Fig. 3F4-7

REMOVAL

Preparation:
- Turn the steering wheel so that the vehicle's wheels are pointing straight ahead.
- Turn the ignition switch to "LOCK".
- Disconnect the battery "–" terminal cable, and wait at least 5 minutes.
- Disconnect the yellow 3way SRS connector located under the steering column.

1. Inflator module

- Loosen the inflator module fixing bolt from behind the steering wheel assembly using a TORX® driver or equivalent until the inflator module can be released from steering assembly (Fig. 3F4-8).

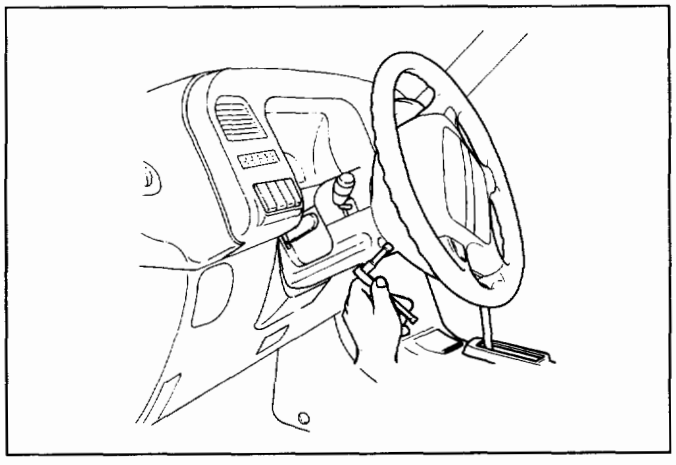

Fig. 3F4-8

- Disconnect the yellow 2way SRS connector located behind the inflator module.

WARNING
THE INFLATOR MODULE SHOULD ALWAYS BE CARRIED WITH THE URETHANE COVER AWAY FROM YOUR BODY AND SHOULD ALWAYS BE LAID ON A FLAT SURFACE WITH THE URETHANE SIDE UP. THIS IS NECESSARY BECAUSE A FREE SPACE IS PROVIDED TO ALLOW THE AIR CUSHION TO EXPAND IN THE UNLIKELY EVENT OF ACCIDENTAL DEPLOYMENT. OTHERWISE, PERSONAL INJURY MAY RESULT (FIG.3F4-9).

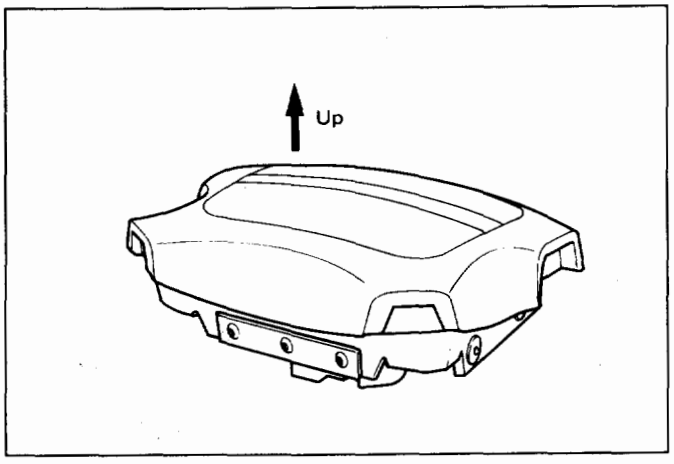

Fig. 3F4-9

2. **Horn lead**
3. **Steering wheel fixing nut**
4. **Steering wheel**
   - Apply a setting mark across the steering wheel and shaft so parts can be reassembled in their original position (Fig. 3F4-10)
   - Use special tool. Remove the steering wheel. Move the tires to the straight ahead position before removing the steering wheel (Fig. 3F4-11).

Steering wheel remover : J-29752

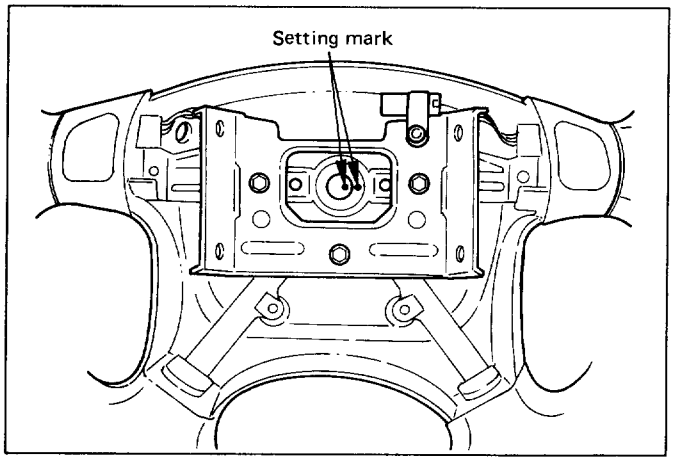

Fig. 3F4-10

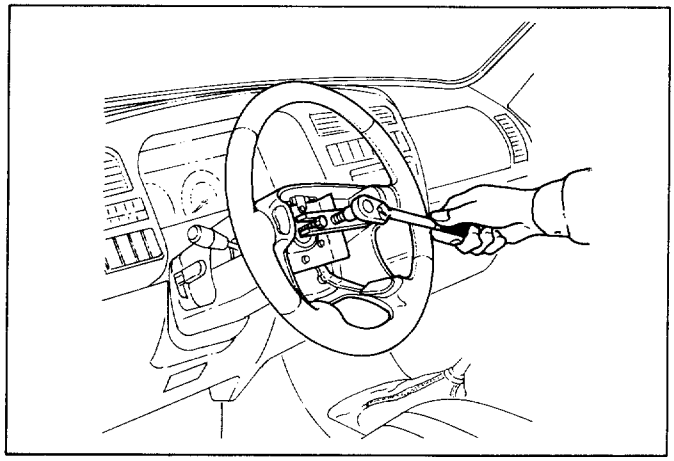

Fig. 3F4-11

CAUTION:

Never apply force to the steering wheel in direction of the shaft by using a hammer or other impact tools in an attempt to remove the steering wheel. The steering shaft is designed as an energy absorbing unit.

INSTALLATION

4. **Steering wheel**
   - Align the setting marks made when removing.

CAUTION:

Never apply force to the steering wheel in direction of the shaft by using a hammer or other impact tools in an attempt to remove the steering wheel. The steering shaft is designed as an energy absorbing unit.

3. **Steering wheel fixing nut**
   - Tighten the steering wheel fixing nut to the specified torque.

Torque	N·m (lb·ft)	34 (25)

2. **Horn lead**
1. **Inflator module**
   - Support the module and carefully connect the module connector.

NOTE:

Pass the lead wire through the tabs on the plastic cover (wire protector) of inflator to prevent lead wire from being pinches.

- Secure the module with one bolt to relieve weight on the connector wire.
- Tighten bolts to specified sequence as figure (Fig. 3F4-12).

Torque	N·m (lb·in)	8 (69)

- Connect the yellow 3way SRS connector located under the steering column.
- Connect the battery "–" terminal cable.
- Set ignition to "ON" while watching warning light. Light should flash 7 times and then go off. If lamp does not operate correctly, refer to Section 9J.

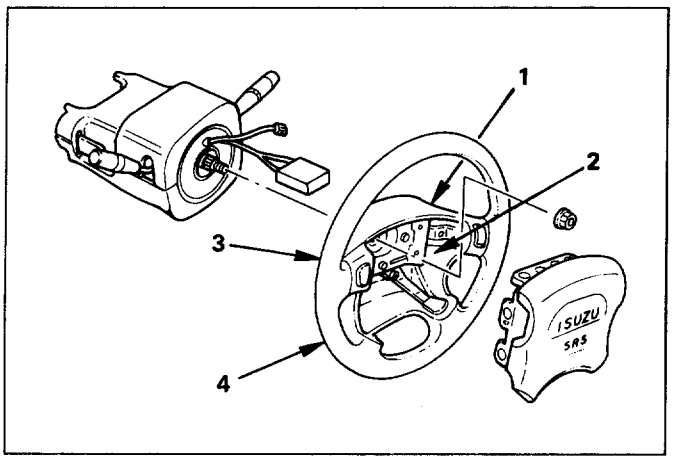

Fig. 3F4-12

COMBINATION SWITCH REPLACEMENT

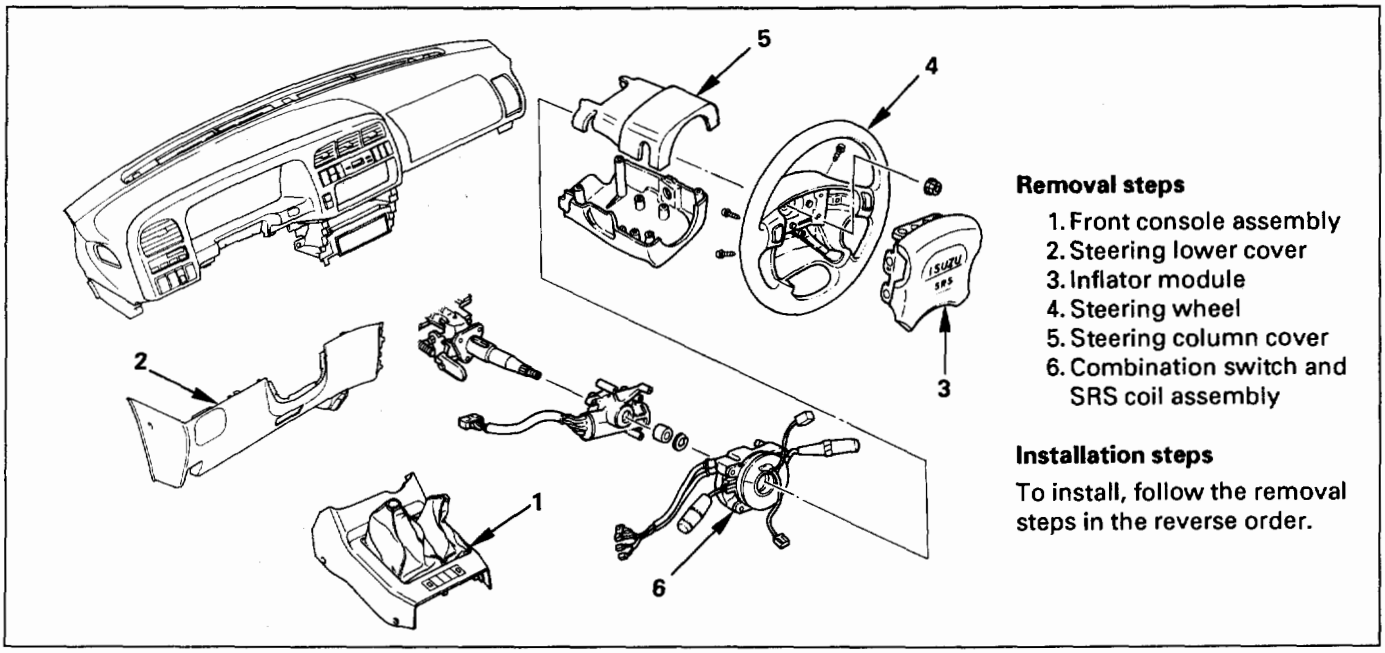

Removal steps

1. Front console assembly
2. Steering lower cover
3. Inflator module
4. Steering wheel
5. Steering column cover
6. Combination switch and SRS coil assembly

Installation steps

To install, follow the removal steps in the reverse order.

Fig. 3F4-13

REMOVAL

Preparation:
- Turn the steering wheel so that the vehicle's wheels are pointing straight ahead.
- Turn the ignition switch to "LOCK".
- Disconnect the battery "–" terminal cable, and wait at least 5 minutes.
- Disconnect the yellow 3way SRS connector located under the steering column.

CAUTION:
The wheels of the vehicle must be straight ahead and the steering column in the "LOCK" position before disconnecting the steering wheel. Failure to do so will cause the coil assembly to become uncentered which will cause damage to the coil assembly.

1. **Front console assembly**
   - Remove the transmission (for M/T) and transfer control lever knob.
   - Disconnect the wiring harness connectors.
2. **Steering lower cover**
   - Remove the engine hood opening lever.
3. **SRS module (Fig.3F4-14 and 15)**
   - Loosen the inflator module fixing bolt from behind the steering wheel assembly using a TORX® driver or equivalent until the inflator module can be released from steering assembly.
   - Disconnect the yellow 2way SRS connector located behind the inflator module.

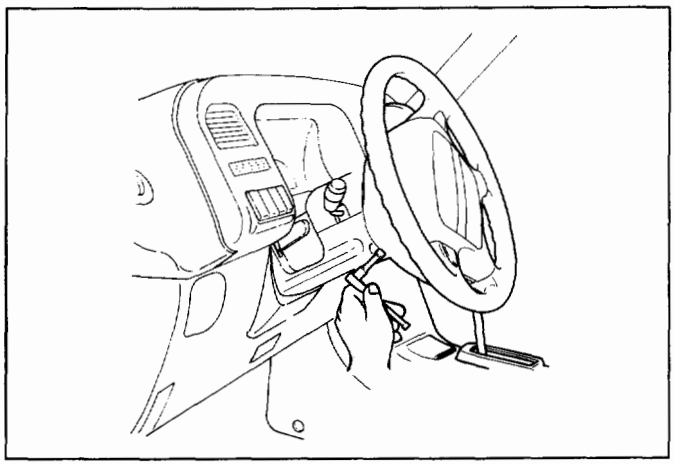

Fig. 3F4-14

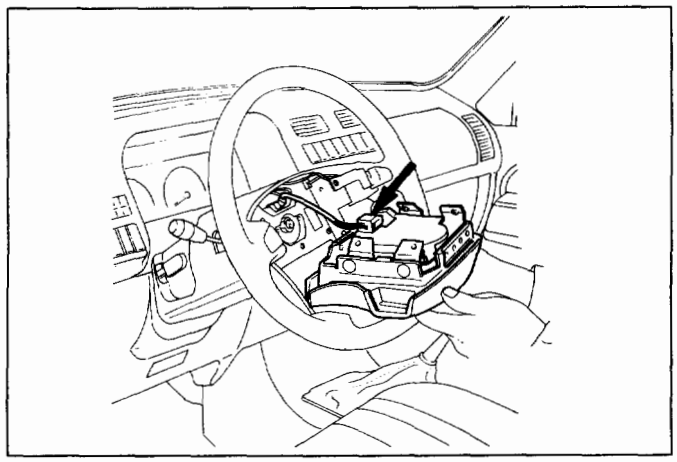

Fig. 3F4-15

WARNING

THE INFLATOR MODULE SHOULD ALWAYS BE CARRIED WITH THE URETHANE COVER AWAY FROM YOUR BODY AND SHOULD ALWAYS BE LAID ON A FLAT SURFACE WITH THE URETHANE SIDE UP. THIS IS NECESSARY BECAUSE A FREE SPACE IS PROVIDED TO ALLOW THE AIR CUSHION TO EXPAND IN THE UNLIKELY EVENT OF ACCIDENTAL DEPLOYMENT. OTHERWISE, PERSONAL INJURY MAY RESULT (FIG. 3F4-16).

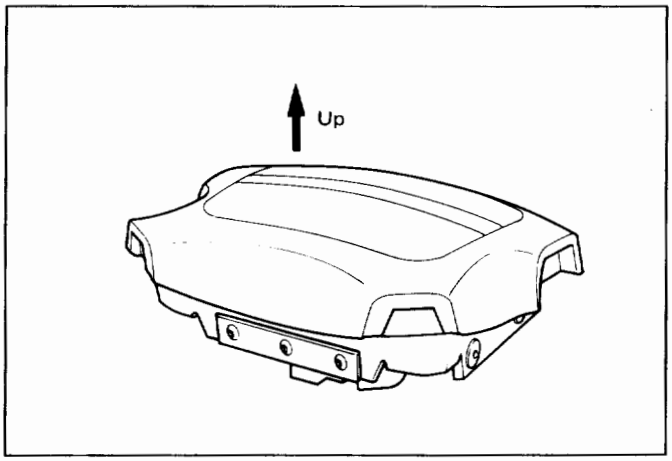

Fig. 3F4-16

4. **Steering wheel**
   - Apply a setting mark across the steering wheel and shaft so parts can be reassembled in their original position (Fig. 3F4-17)
   - Use special tool. Remove the steering wheel. Move the tires to the straight ahead position before removing the steering wheel (Fig. 3F4-18).

Steering wheel remover : J-29752

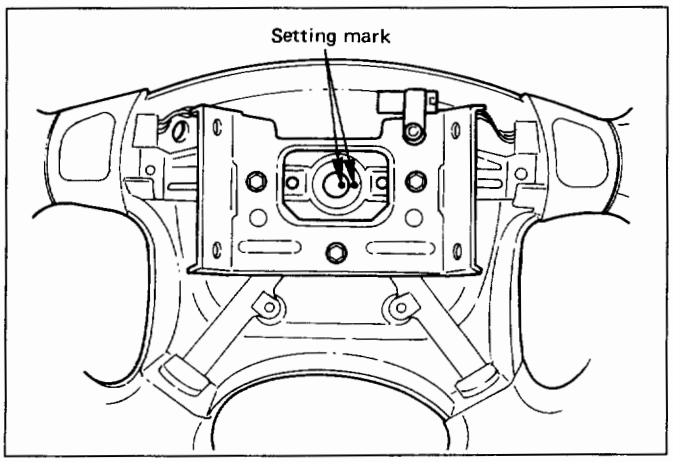

Fig. 3F4-17

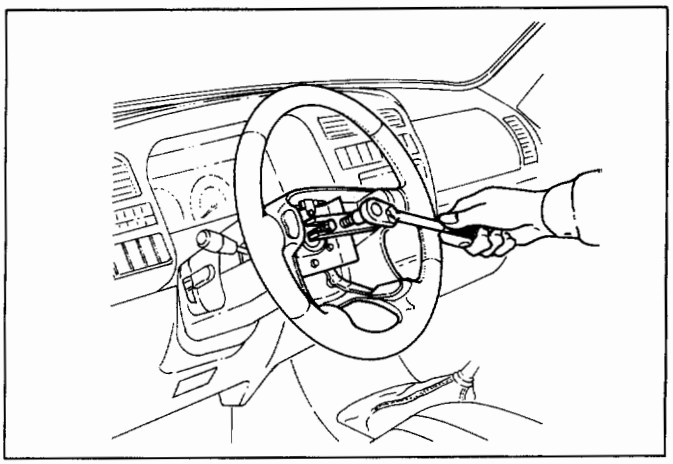

Fig. 3F4-18

CAUTION:

Never apply force to the steering wheel in direction of the shaft by using a hammer or other impact tools in an attempt to remove the steering wheel. The steering shaft is designed as an energy absorbing unit.

5. **Steering column cover**
6. **Combination switch and SRS coil assembly**
   - Disconnect the wiring harness connectors located under the steering column.
   - Remove the combination switch assembly with SRS coil (Fig. 3F4-19).

NOTE:

The SRS coil is a part of the combination switch assembly, which can not be replaced separately. Therefore, be sure not to remove the SRS coil from the combination switch assembly.

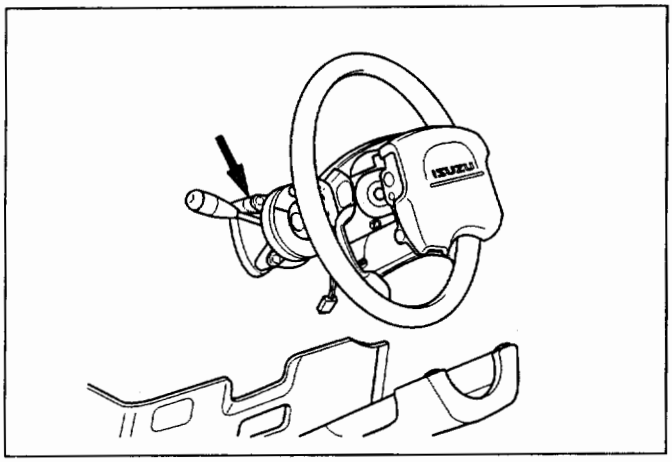

Fig. 3F4-19

INSTALLATION

6. Combination switch and SRS coil assembly

- After installation of combination switch assembly, connect the combination switch wiring harness connector and the SRS 3way connector located under the steering column.
- Turn the SRS coil clockwise to full, return about 3 turns and align the neutral mark (Fig.3F4-20).

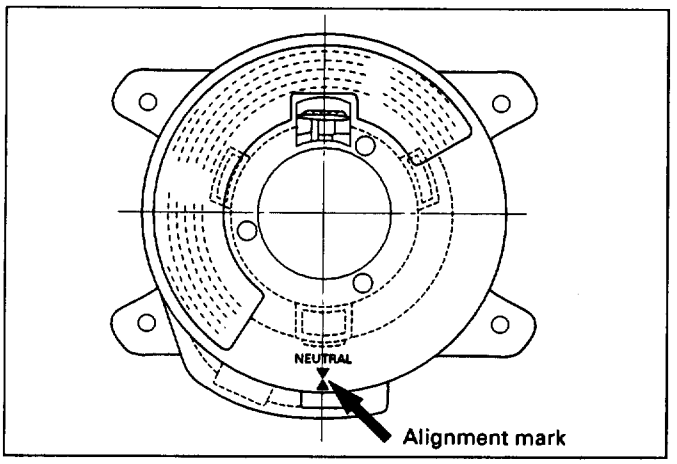

Fig. 3F4-20

CAUTION:

When turning the SRS coil clockwise to full, stop turning if resistance is felt. Forced further turning may damage to the cable in the SRS coil.

5. Steering column cover

- When installing the steering column cover, be sure to wire (through each harness) as illustrated so that the harnesses starter switch, combination switch and SRS coil may not catch wiring (Fig. 3F4-21).

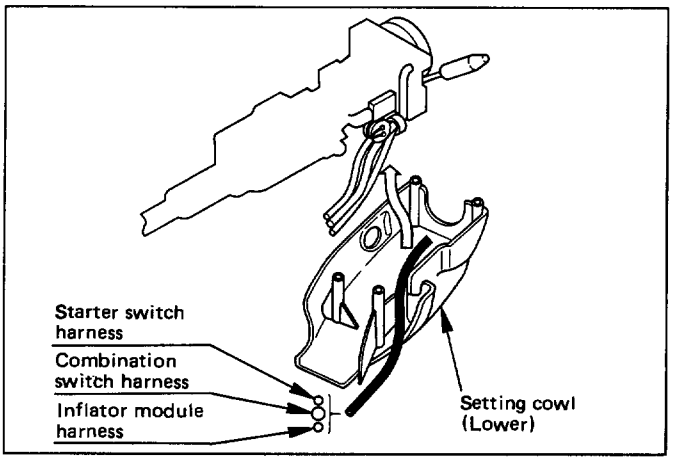

Fig. 3F4-21

4. Steering wheel

- Align the setting marks made when removing.

CAUTION:

Never apply force to the steering wheel in direction of the shaft by using a hammer or other impact tools in an attempt to remove the steering wheel. The steering shaft is designed as an energy absorbing unit.

- Tighten the steering wheel fixing nut to the specified torque.

Torque	N·m (lb·ft)	34 (25)

3. SRS module

- Support the module and carefully connect the module connector.

NOTE:

Pass the lead wire through the tabs on the plastic cover (wire protector) of inflator to prevent lead wire from being pinched.

- Secure the module with one bolt to relieve weight on the connector wire.
- Tighten bolts to specified sequence as figure (Fig. 3F4-22).

Torque	N·m (lb·in)	8 (69)

2. Steering lower cover

- Install the engine hood opening lever.

1. Front console assembly

- Install the transmission (for M/T) and transfer control lever knob.
- Install the wiring harness connectors.

- Connect the battery "–" terminal cable.
- Set ignition to "ON" while watching warning light.
- Light should flash 7 times and then go off. If lamp does not operate correctly, refer to Section 9J.

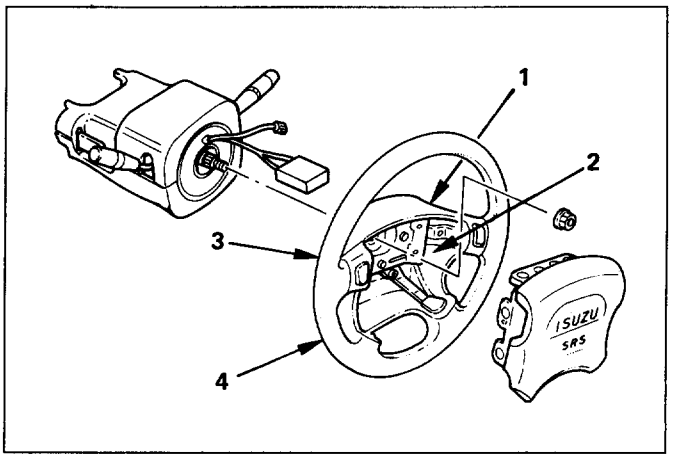

Fig. 3F4-22

LOCK CYLINDER REPLACEMENT

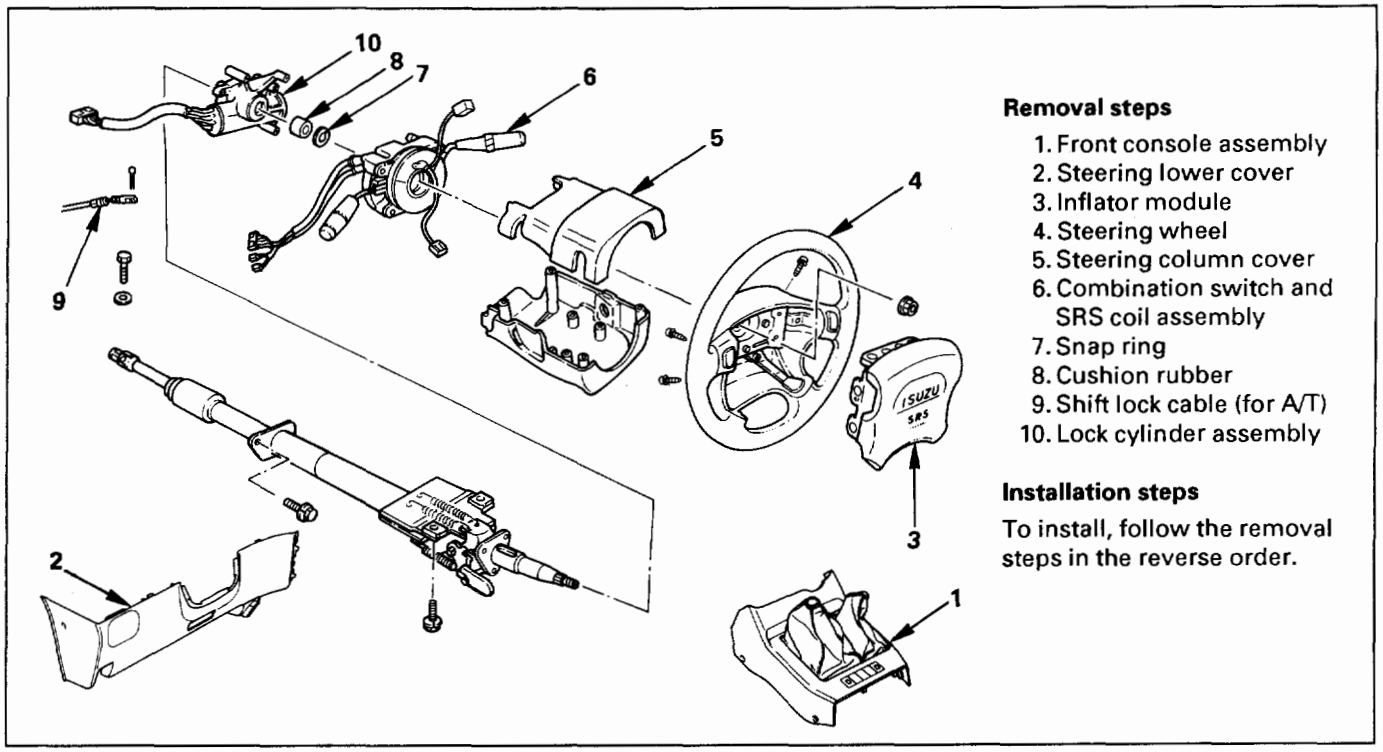

Removal steps

1. Front console assembly
2. Steering lower cover
3. Inflator module
4. Steering wheel
5. Steering column cover
6. Combination switch and SRS coil assembly
7. Snap ring
8. Cushion rubber
9. Shift lock cable (for A/T)
10. Lock cylinder assembly

Installation steps

To install, follow the removal steps in the reverse order.

Fig. 3F4-23

REMOVAL

Preparation:
- Turn the steering wheel so that the vehicle's wheels are pointing straight ahead.
- Turn the ignition switch to "LOCK".
- Disconnect the battery "–" terminal cable, and wait at least 5 minutes.
- Disconnect the yellow 3way SRS connector located under the steering column.

CAUTION:
The wheels of the vehicle must be straight ahead and the steering column in the "LOCK" position before disconnecting the steering wheel. Failure to do so will cause the coil assembly to become uncentered which will cause damage to the coil assembly.

1. **Front console assembly**
   - Remove the transmission (for M/T) and transfer control lever knob.
   - Disconnect the wiring harness connectors.
2. **Steering lower cover**
   - Remove the engine hood opening lever.
3. **SRS module**
   - Loosen the inflator module fixing bolt from behind the steering wheel assembly using a TORX® driver or equivalent until the inflator module can be released from steering assembly.
   - Disconnect the yellow 2way SRS connector located behind the inflator module.
4. **Steering wheel**
   - Apply a setting mark across the steering wheel and shaft so parts can be reassembled in their original position (Fig. 3F4-24)
   - Use special tool. Remove the steering wheel. Move the tires to the straight ahead position before removing the steering wheel (Fig. 3F4-25).

Steering wheel remover : J-29752

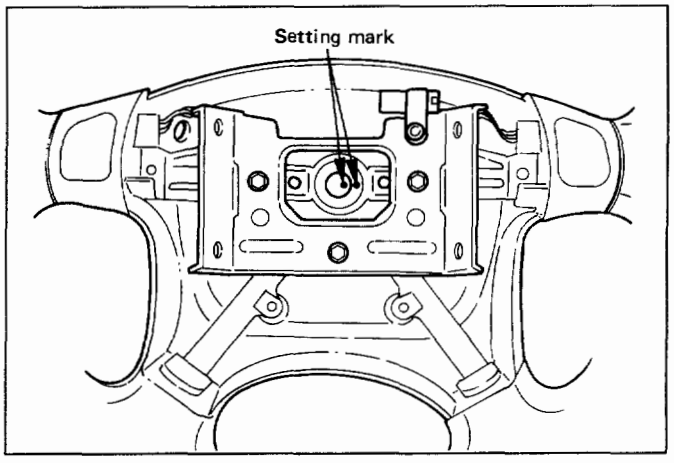

Fig. 3F4-24

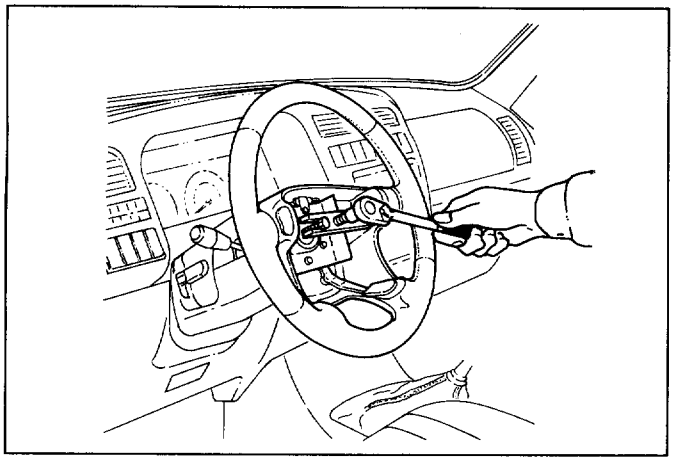

Fig. 3F4-25

CAUTION:

Never apply force to the steering wheel in direction of the shaft by using a hammer or other impact tools in an attempt to remove the steering wheel. The steering shaft is designed as an energy absorbing unit.

WARNING

THE INFLATOR MODULE SHOULD ALWAYS BE CARRIED WITH THE URETHANE COVER AWAY FROM YOUR BODY AND SHOULD ALWAYS BE LAID ON A FLAT SURFACE WITH THE URETHANE SIDE UP. THIS IS NECESSARY BECAUSE A FREE SPACE IS PROVIDED TO ALLOW THE AIR CUSHION TO EXPAND IN THE UNLIKELY EVENT OF ACCIDENTAL DEPLOYMENT. OTHERWISE, PERSONAL INJURY MAY RESULT (FIG.3F4-26).

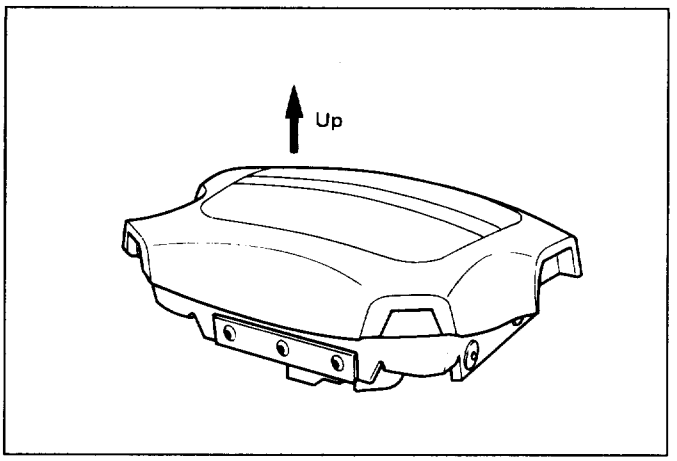

Fig. 3F4-26

5. **Steering column cover**
6. **Combination switch and SRS coil assembly**
   - Disconnect the wiring harness connectors located under the steering column.
   - Remove the combination switch assembly with SRS coil (Fig. 3F4-27).

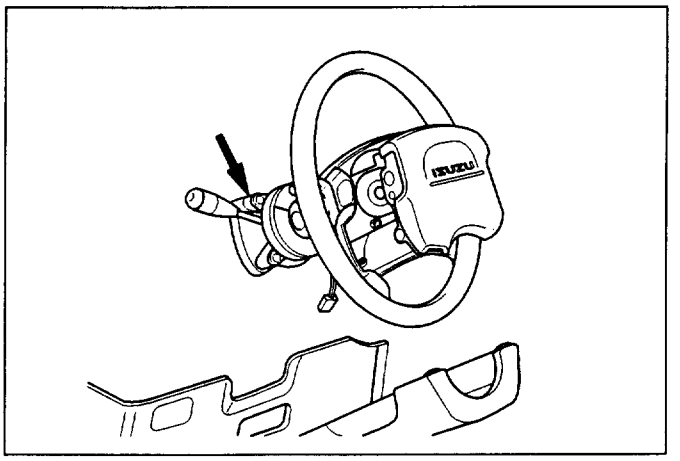

Fig. 3F4-27

NOTE:

The SRS coil is a part of the combination switch assembly, which can not be replaced separately. Therefore, be sure not to remove the SRS coil from the combination switch assembly.

7. **Snap ring**
8. **Cushion rubber**
9. **Shift lock cable (for A/T)**
10. **Lock cylinder assembly**
    - Disconnect the starter switch harness connector located under the steering column.

INSTALLATION

10. **Lock cylinder assembly**
9. **Shift lock cable (for A/T)**
8. **Cushion rubber**
7. **Snap ring**
6. **Combination switch and SRS coil assembly**
   - After installation of combination switch assembly, connect the combination switch wiring harness connector and the SRS 3way connector located under the steering column.
   - Turn the SRS coil clockwise to full, return about 3 turns and align the neutral mark (Fig.3F4-28).

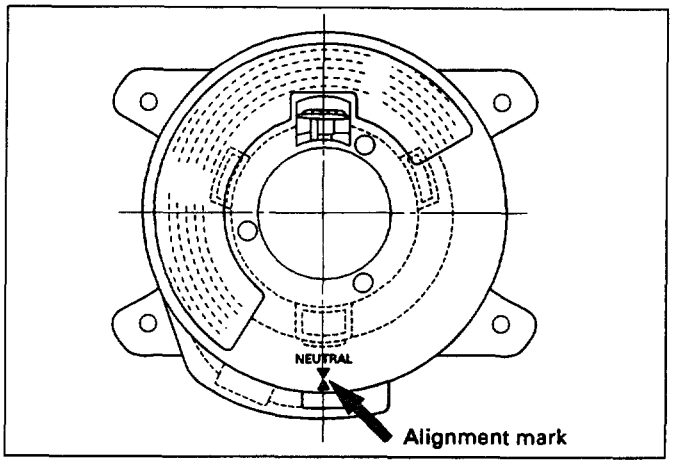

Fig. 3F4-28

CAUTION:

When turning the SRS coil clockwise to full, stop turning if resistance is felt. Forced further turning may damage to the cable in the SRS coil.

5. **Steering column cover**
   - When installing the steering column cover, be sure to wire (through each harness) as illustrated so that the harnesses starter switch, combination switch and SRS coil may not catch wiring (Fig. 3F4-29).

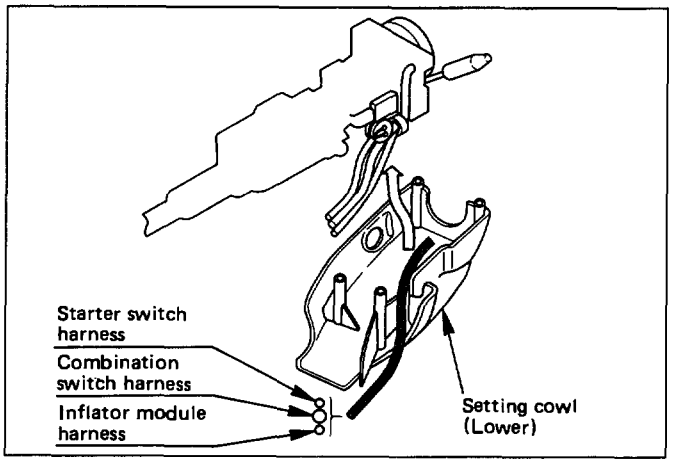

Fig. 3F4-29

4. **Steering wheel**
   - Align the setting marks made when removing.

CAUTION:

Never apply force to the steering wheel in direction of the shaft by using a hammer or other impact tools in an attempt to remove the steering wheel. The steering shaft is designed as an energy absorbing unit.

- Tighten the steering wheel fixing nut to the specified torque.

Torque	N·m (lb·ft)	34 (25)

3. **Inflator module**
   - Support the module and carefully connect the module connector.

NOTE:

Pass the lead wire through the tabs on the plastic cover (wire protector) of inflator to prevent lead wire from being pinched.

- Secure the module with one bolt to relieve weight on the connector wire.
- Tighten fixing bolts to specified sequence as figure (Fig. 3F4-30).

Torque	N·m (lb·in)	8 (69)

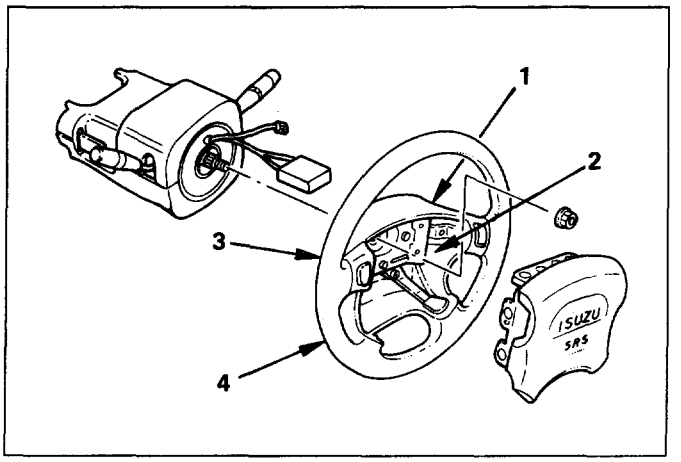

Fig. 3F4-30

2. **Steering lower cover**
   - Install the engine hood opening lever.
1. **Front console assembly**
   - Connect the wiring harness connectors.
   - Install the transmission (for M/T) and transfer control lever knob.

- Connect the yellow 3way SRS connector located under the steering column.
- Connect the battery "–" terminal cable.

SYSTEM INSPECTION

- Set ignition to "ON" while watching warning light.
- Light should flash 7 times and then go off. If lamp does not operate correctly, refer to Section 9J.

STEERING COLUMN REPLACEMENT

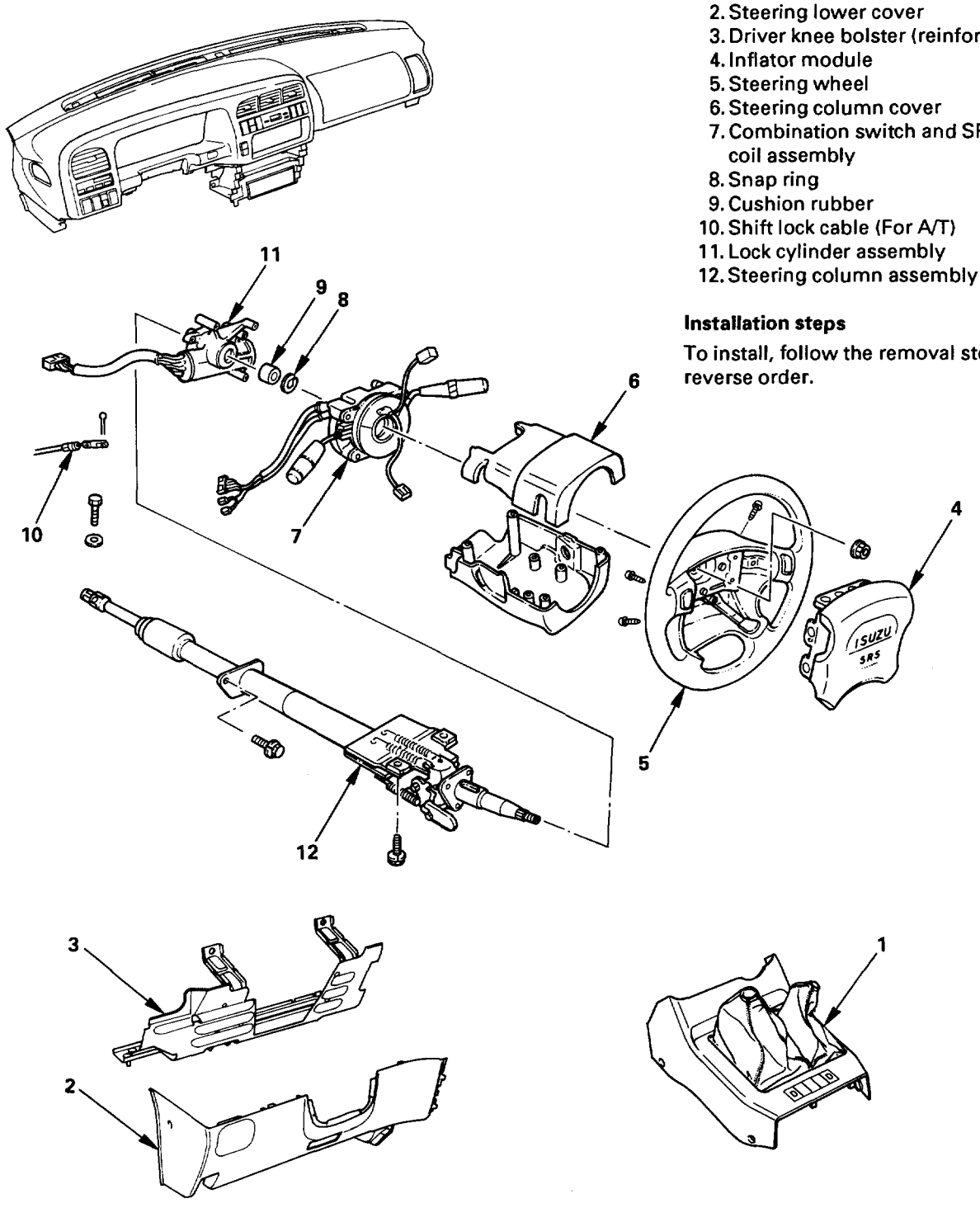

Removal steps

1. Front console assembly
2. Steering lower cover
3. Driver knee bolster (reinforcement)
4. Inflator module
5. Steering wheel
6. Steering column cover
7. Combination switch and SRS coil assembly
8. Snap ring
9. Cushion rubber
10. Shift lock cable (For A/T)
11. Lock cylinder assembly
12. Steering column assembly

Installation steps

To install, follow the removal steps in the reverse order.

Fig. 3F4-31

REMOVAL

Preparation:
- Turn the steering wheel so that the vehicle's wheels are pointing straight ahead.
- Turn the ignition switch to "LOCK".
- Disconnect the battery "–" terminal cable, and wait at least 5 minutes.
- Disconnect the yellow 3way SRS connector located under the steering column.

CAUTION:
The wheel of the vehicle must be straight ahead and the steering column in the "LOCK" position before disconnecting the steering column from the steering gear.
Failure to do so will cause the SRS coil assembly to become uncentered which will cause damage to the SRS coil assembly.

1. **Front console assembly**
   - Disconnect the transmission (for M/T) and transfer control lever knob.
   - Disconnect the wiring harness connectors.
2. **Steering lower cover**
   - Remove the engine hood opening lever.
3. **Driver knee bolster (reinforcement)**
4. **Inflator module (Fig.3F4-32)**
   - Loosen the inflator module fixing bolt from behind the steering wheel assembly using a TORX® driver or equivalent until the inflator module can be released from steering assembly.
   - Disconnect the yellow 2way SRS connector located behind the inflator module.

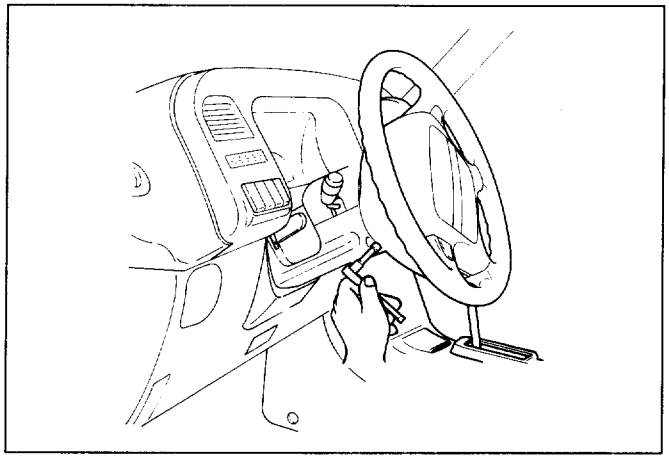

Fig. 3F4-32

WARNING
THE INFLATOR MODULE SHOULD ALWAYS BE CARRIED WITH THE URETHANE COVER AWAY FROM YOUR BODY AND SHOULD ALWAYS BE LAID ON A FLAT SURFACE WITH THE URETHANE SIDE UP. THIS IS NECESSARY BECAUSE A FREE SPACE IS PROVIDED TO ALLOW THE AIR CUSHION TO EXPAND IN THE UNLIKELY EVENT OF ACCIDENTAL DEPLOYMENT. OTHERWISE, PERSONAL INJURY MAY RESULT (FIG.3F4-33).

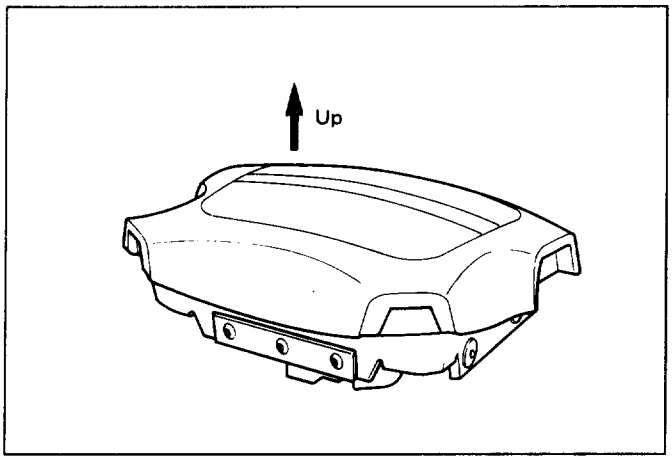

Fig. 3F4-33

5. **Steering wheel**
   - Apply a setting mark across the steering wheel and shaft so parts can be reassembled in their original position (Fig. 3F4-34)
   - Use special tool. Remove the steering wheel. move the tires to the straight ahead position before removing the steering wheel (Fig. 3F4-35).

Steering wheel remover : J-29752

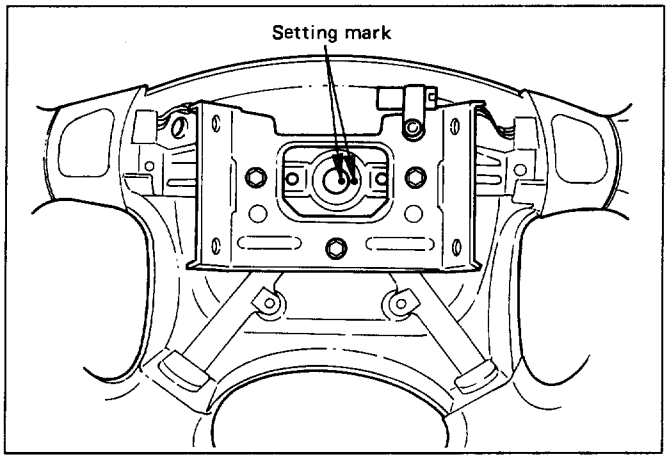

Fig. 3F4-34

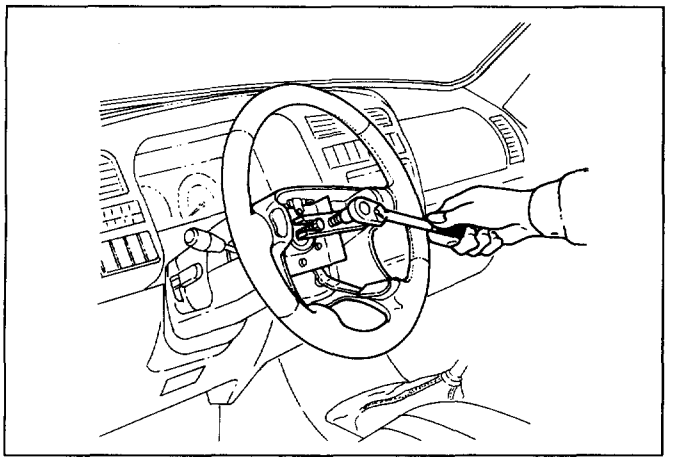

Fig. 3F4-35

6. **Steering column cover**
7. **Combination switch and SRS coil assembly**
   - Disconnect the wiring harness connectors located under the steering column.
   - Remove the combination switch assembly with SRS coil (Fig. 3F4-36).

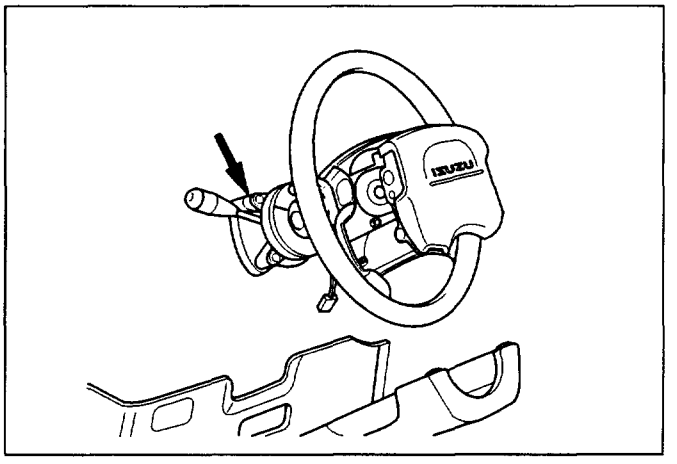

Fig. 3F4-36

NOTE:
SRS coil is a part of combination switch assembly, which can not be replaced singly. Therefore, be sure not to remove the SRS coil from the combination switch assembly.

8. **Snap ring**
9. **Cushion rubber**
10. **Shift lock cable (For A/T)**
11. **Lock cylinder assembly**
    - Disconnect the starter switch harness connector located under the steering column.
12. **Steering column assembly**
    - Apply a setting mark across the universal joint and steering shaft to reassemble the parts in their original position (Fig. 3F4-37).

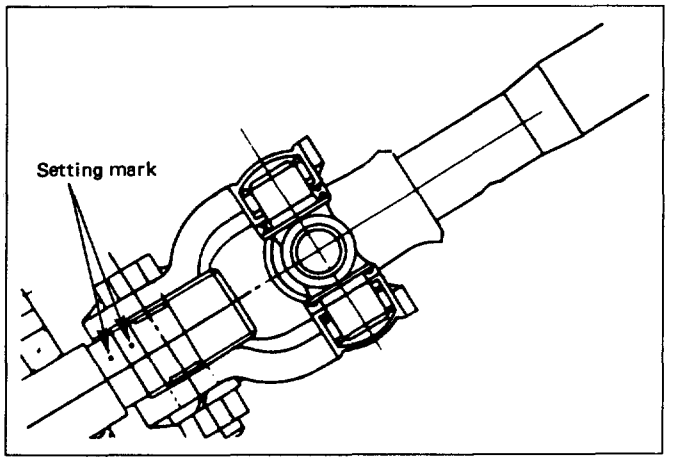

Fig. 3F4-37

NOTE:
A setting mark can be easily made if the shaft is withdrawn a little by loosening the steering shaft universal joint.

INSTALLATION

12. **Steering column assembly**
    - Align the setting marks on the universal joint and steering shaft made during removal.
    - Tighten the steering column fixing bolt (dash panel) to the specified torque.

Torque	N·m(lb·ft)	19 (14)

    - Tighten the steering column fixing bolt (pedal bracket) to the specified torque.

Torque	N·m(lb·ft)	17 (13)

    - Tighten the universal joint to the specified torque.

Torque	N·m(lb·ft)	25 (18)

11. **Lock cylinder assembly**
10. **Shift lock cable (For A/T)**
9. **Cushion rubber**
8. **Snap ring**
7. **Combination switch and SRS coil assembly**
   - After installation of combination switch assembly, connect the combination switch wiring harness connector and the SRS 3way connector located under the steering column.
   - Turn the SRS coil clockwise to full, return about 3 turns and align the neutral mark (Fig. 3F4-38).

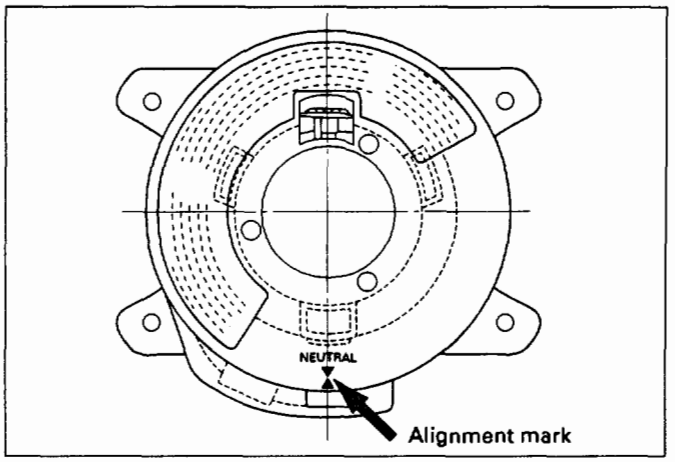

Fig. 3F4-38

CAUTION:

When turning the SRS coil clockwise to full, stop turning if resistance is felt. Forced further turning may damage to the cable in the SRS coil.

6. **Steering column cover**
   - When installing the steering column cover, be sure to wire (through each harness) as illustrated so that the harnesses starter switch, combination switch and SRS coil may not catch wiring (Fig. 3F4-39).

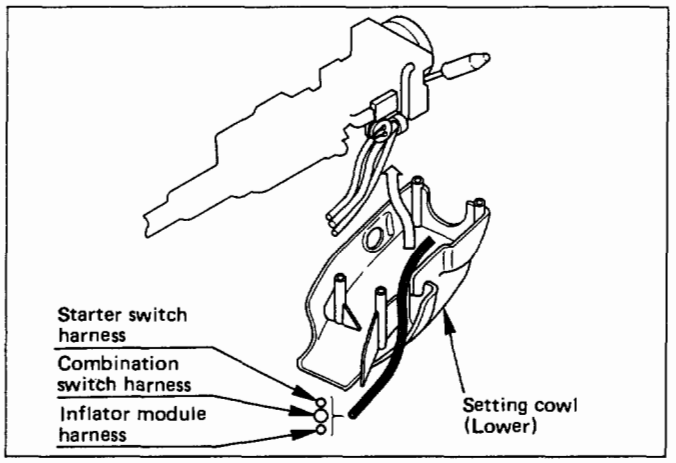

Fig. 3F4-39

5. **Steering wheel**
   - Align the setting marks made when removing.

CAUTION:

Never apply force to the steering wheel in direction of the shaft by using a hammer or other impact tools in an attempt to remove the steering wheel. The steering shaft is designed as an energy absorbing unit.

- Tighten the steering wheel fixing nut to the specified torque.

Torque	N·m (lb·ft)	34 (25)

4. **Inflator module**
   - Support the module and carefully connect the module connector.

NOTE:

Pass the lead wire through the tabs on the plastic cover (wire protector) of inflator to prevent lead wire from being pinched.

- Secure the module with one bolt to relieve weight on the connector wire.
- Tighten bolts to specified sequence as figure (Fig. 3F4-40).

Torque	N·m (lb·in)	8 (69)

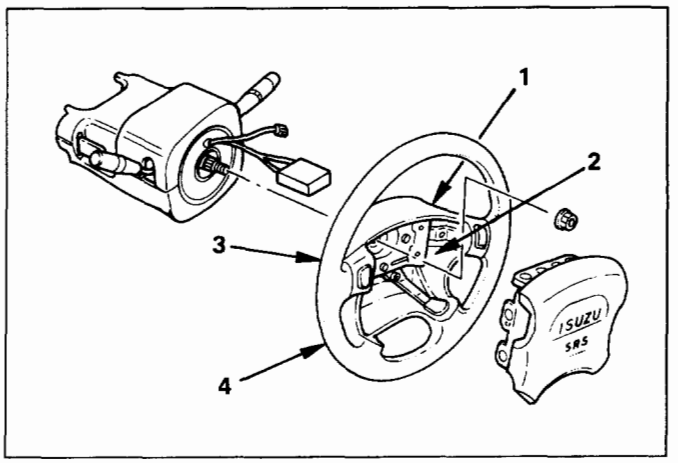

Fig. 3F4-40

3. **Driver knee bolster (reinforcement)**
2. **Steering lower cover**
   - Install the engine hood opening lever.
1. **Front console assembly**
   - Connect the wiring harness connectors.
   - Install the transmission (for M/T) and transfer control lever knob.

- Connect the yellow 3way SRS connector located under the steering column.
- Connect the battery "–" terminal cable.

SYSTEM INSPECTION

- Set ignition to "ON" while watching warning light.
- Light should flash 7 times and then go off. If lamp does not operate correctly, refer to Section 9J.

MAIN DATA AND SPECIFICATIONS

TORQUE SPECIFICATIONS

N·m (lb·ft)

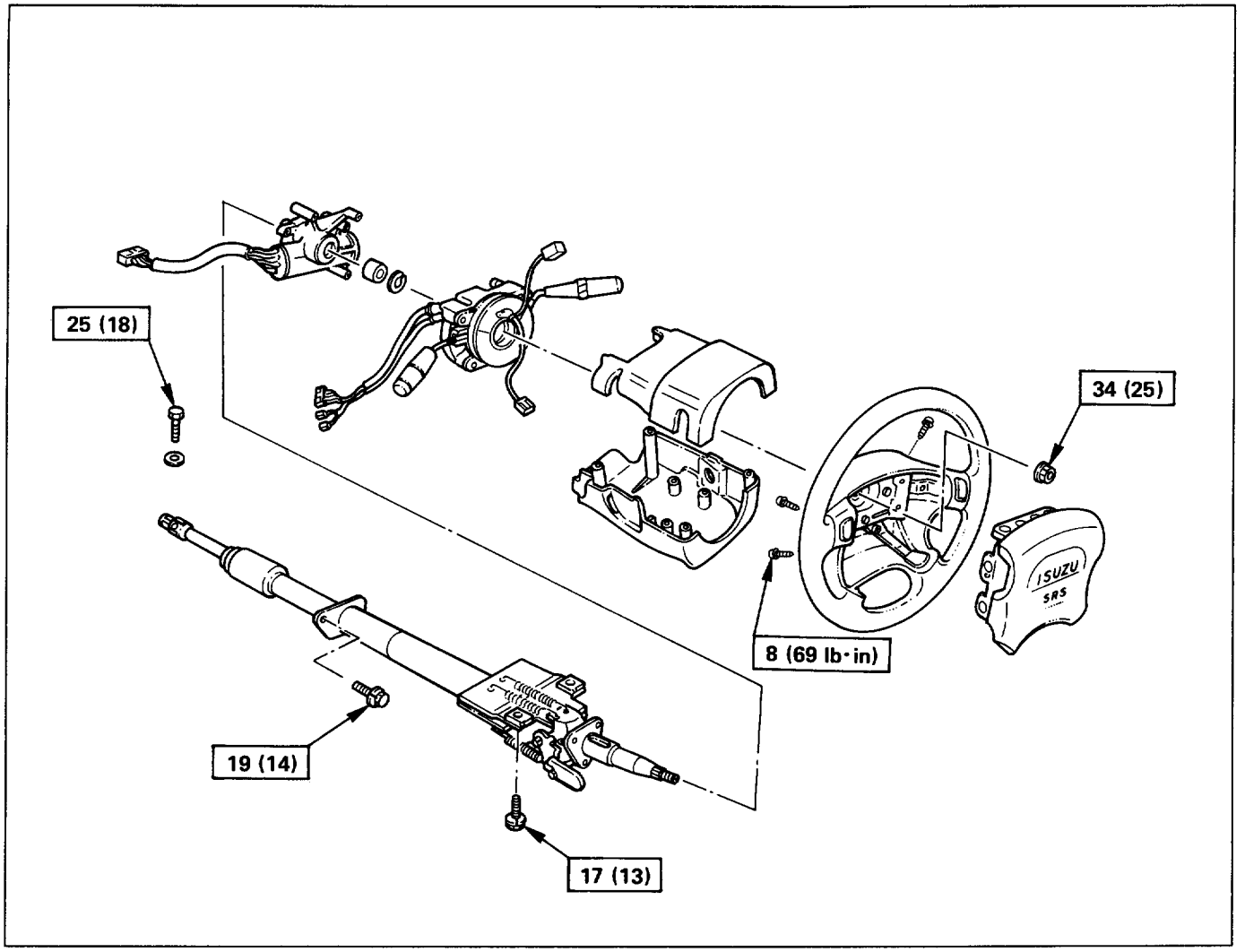

Fig. 3F4-41

SPECIAL TOOLS

ILLUSTRATION	TOOL NO. TOOL NAME
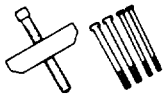	**J-29752** Steering wheel remover

MEMO

SECTION 4A

PROPELLER SHAFT AND AXLE

CONTENTS

Propeller Shaft ..... **Section 4A**
Rear Axle ..... **Section 4B**
Front Driving Axle ..... **Section 4C**

SECTION 4A

PROPELLER SHAFT

CAUTION:
When fasteners are removed, always reinstall them at the same location from which they were removed. If a fastener needs to be replaced, use the correct part number fastener for that application. If the correct part number fastener is not available, a fastener of equal size and strength (or stronger) may be used. Fasteners that are not reused, and those requiring thread locking compound, will be called out. The correct torque values must be used when installing fasteners that require torque. If the above conditions are not followed, parts or system damage could result.

CONTENTS

General Description **4A-1**
On-Vehicle Service **4A-2**
Rear Propeller Shaft **4A-2**
Front Propeller Shaft **4A-3**
Unit Repair **4A-4**
Rear Propeller Shaft **4A-4**
Universal Joint (Rear Propeller Shaft) **4A-5**
Front Propeller Shaft **4A-8**
Universal Joint (Front Propeller Shaft) ... **4A-9**
Main Data and Specifications **4A-12**
General Specifications **4A-12**
Torque Specifications **4A-13**

GENERAL DESCRIPTION

Since the propeller shaft is total balanced carefully, welding or any other modifications are not permitted.

Alignment marks should be applied to each propeller shaft before removal.

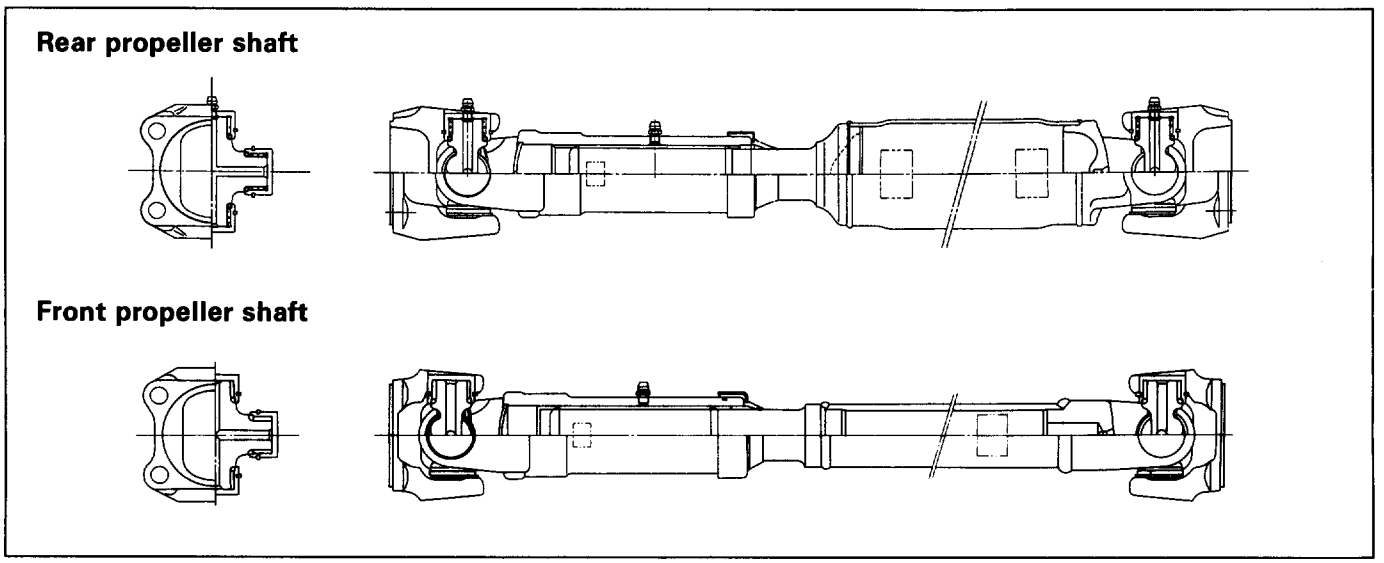

Fig. 4A-1

ON-VEHICLE SERVICE

Preparation:

- Jack up the vehicle and support it on the chassis stands.
- Gear shift lever should be placed in neutral position and parking brake released.

REAR PROPELLER SHAFT

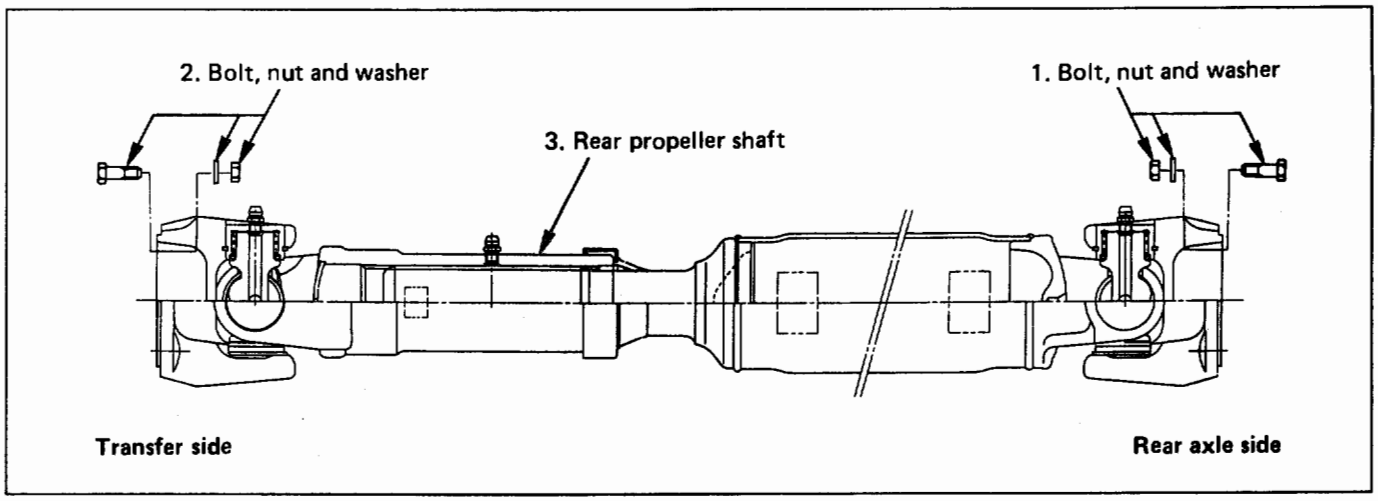

Fig. 4A-2

REMOVAL

NOTE:
Apply alignment marks on the flange at the rear propeller shaft both front and rear side (Fig. 4A-3).

1. **Bolt, nut and washer (Rear axle side)**
2. **Bolt, nut and washer (Transfer side)**
3. **Rear propeller shaft**

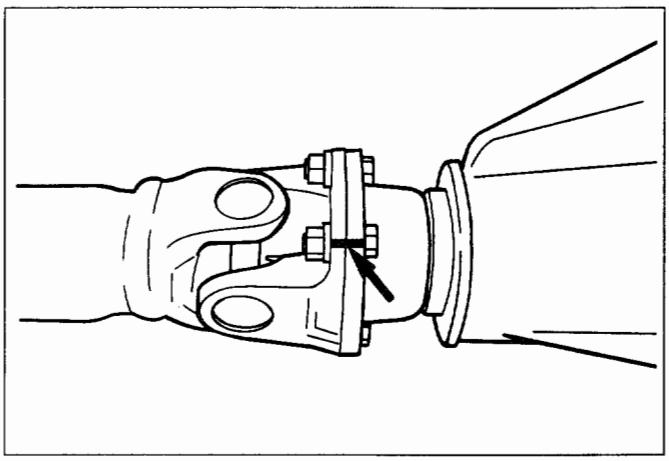

Fig. 4A-3

- Completely remove the black paint from the connecting surface of flange coupling on each end of propeller shaft. Clean so that no foreign matter will be caught in between.
- After installing the propeller shaft, be sure to apply black paint to exposed area (other than connecting surface) of the entire surface of flange coupling (Fig. 4A-4).

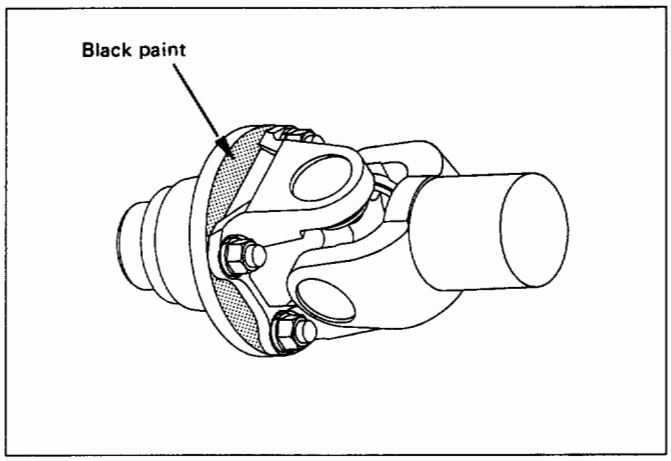

Fig. 4A-4

INSTALLATION

3. **Rear propeller shaft**

NOTE:
- Never install the shaft assembly backwards.

2. **Bolt, nut and washer (Transfer side)**
1. **Bolt, nut and washer (Rear axle side)**
   - Align the mark which is applied at removal.

Torque N·m (lb·ft)	63 (46)

FRONT PROPELLER SHAFT

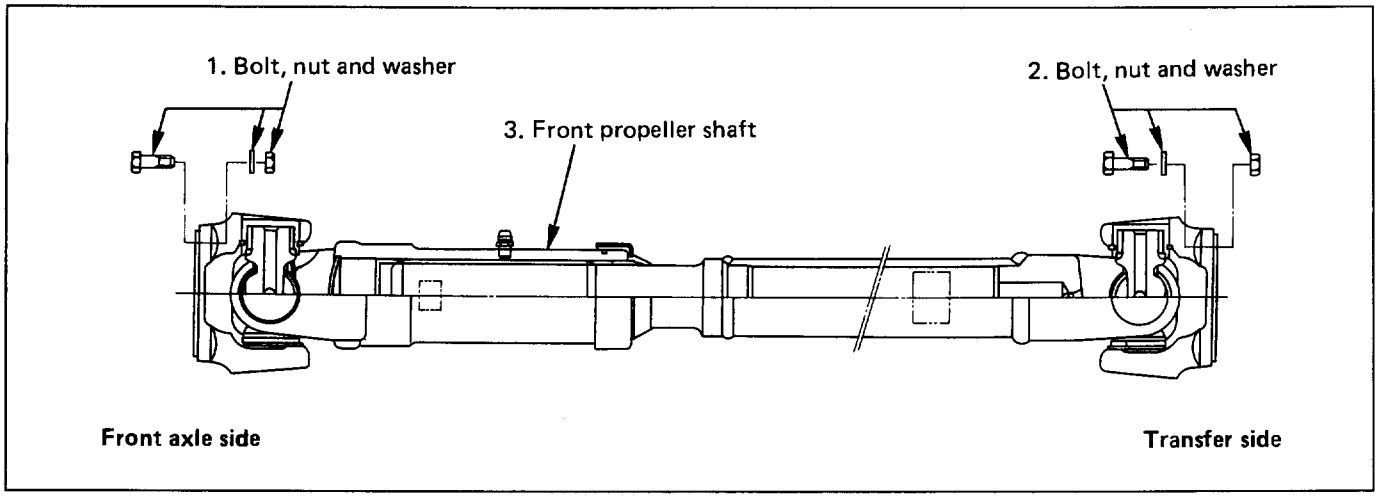

Fig. 4A-5

REMOVAL

Preparation:

- Remove the exhaust and transfer protectors.

NOTE:
Apply alignment marks on the flange at the front propeller shaft both front and rear side (Fig. 4A-6).

1. **Bolt, nut and washer (Front axle side)**
2. **Bolt, nut and washer (Transfer side)**
3. **Front propeller shaft**

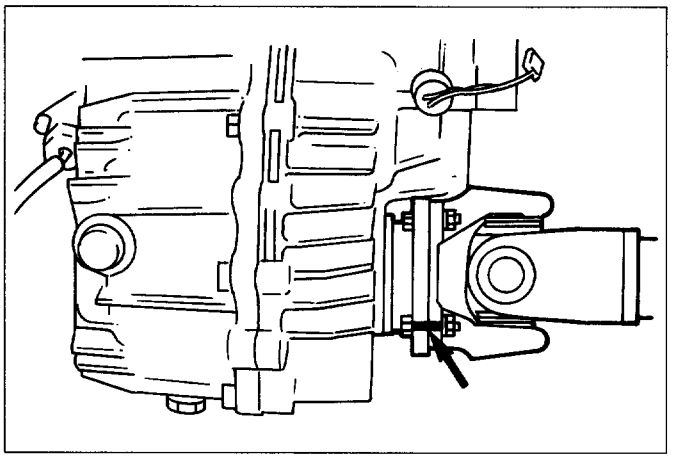

Fig. 4A-6

INSTALLATION

3. **Front propeller shaft**

NOTE:

- Never install the shaft assembly backwards.
- Completely remove the black paint from the connecting surface of flange coupling on each end of propeller shaft. Clean so that no foreign matter will be caught in between.
- After installing the propeller shaft, be sure to apply black paint to exposed area (other than connecting surface) of the entire surface of flange coupling (Fig. 4A-7).

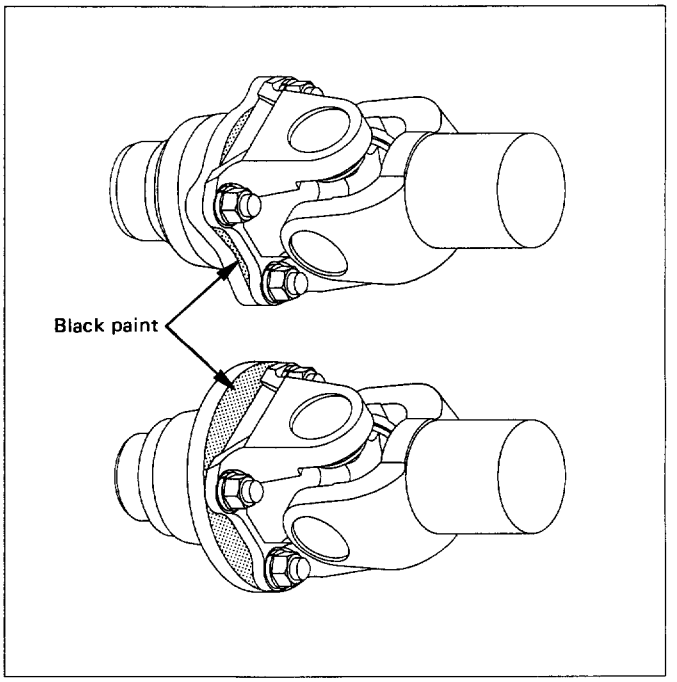

Fig. 4A-7

2. **Bolt, nut and washer (Transfer side)**
1. **Bolt, nut and washer (Front axle side)**
   - Align the mark which is applied at removal.

Torque N·m (lb·ft)	63 (46)

- Install the exhaust and transfer protectors.

UNIT REPAIR

REAR PROPELLER SHAFT

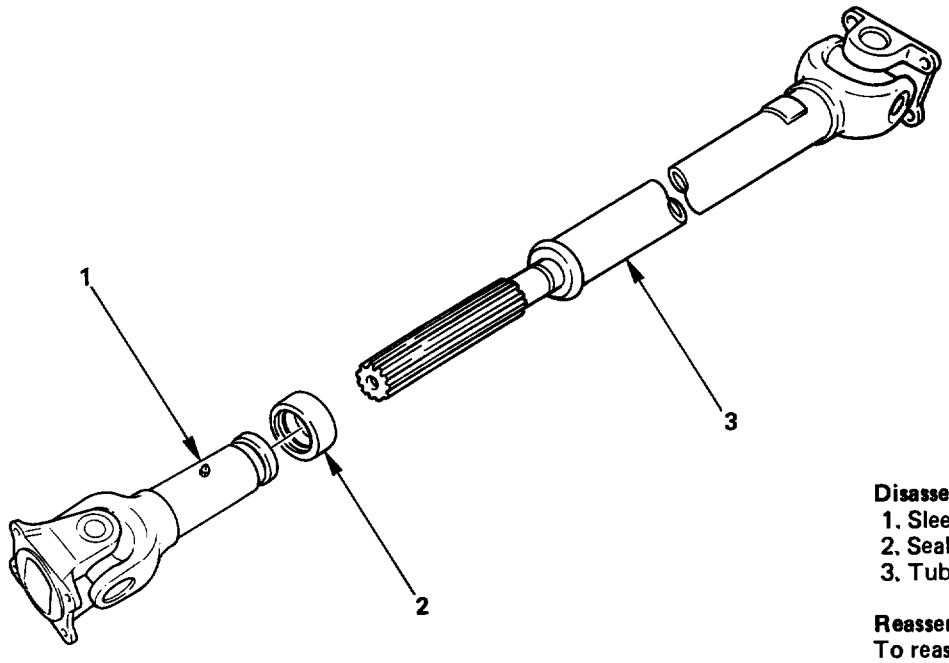

Disassembly steps
1. Sleeve yoke
2. Seal
3. Tube assembly

Reassembly steps
To reassemble, follow the disassembly steps in the reverse order.

Fig. 4A-8

DISASSEMBLY

1. **Sleeve yoke**
   - Apply alignment marks on the sleeve yoke and tube assembly (Fig. 4A-9).
2. **Seal**
3. **Tube assembly**

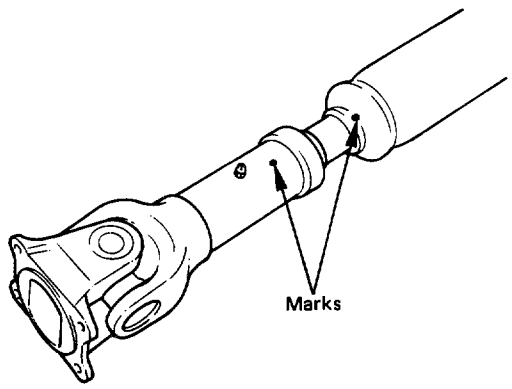

Fig. 4A-9

REASSEMBLY

3. **Tube assembly**
2. **Seal**
   - Discard used seal and install new one.
1. **Sleeve yoke**
   - Align the alignment marks (Fig. 4A-9).

UNIVERSAL JOINT (Rear propeller shaft)

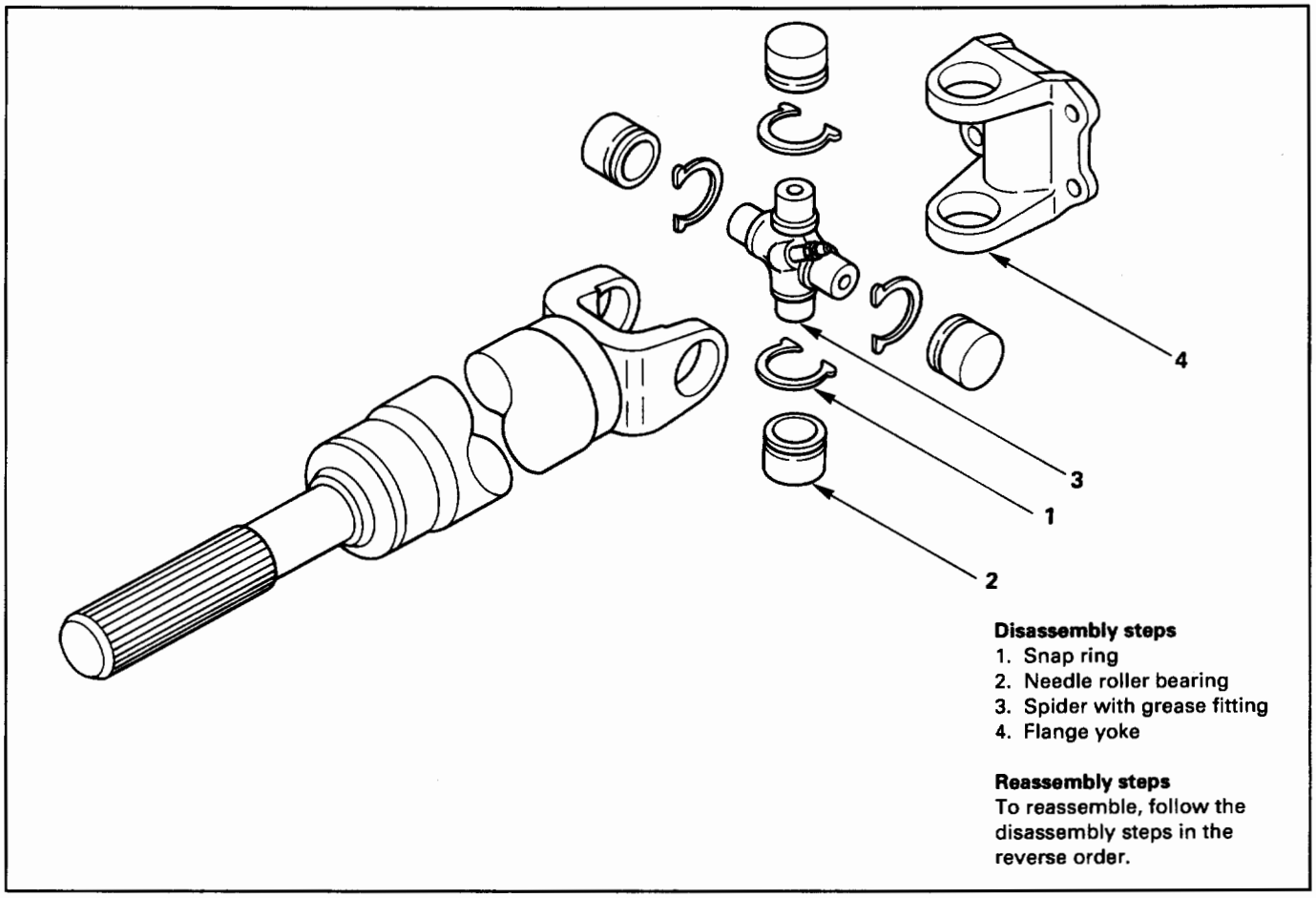

Fig. 4A-10

DISASSEMBLY

1. Snap ring

- Apply alignment marks on the yokes of the universal joint (Fig. 4A-11).

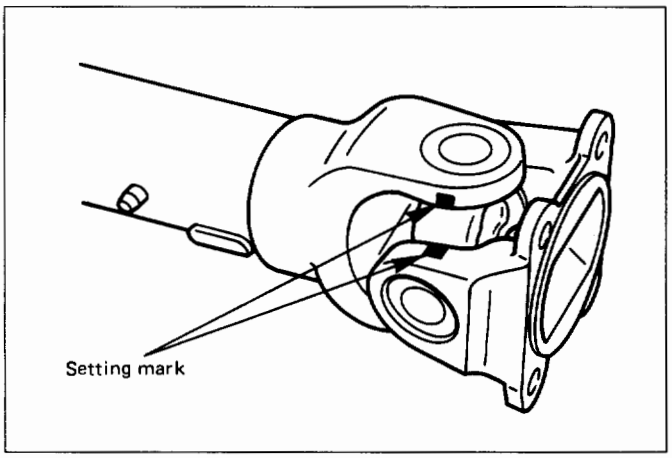

Fig. 4A-11

2. Needle roller bearing

- Tap out the bearing by gently striking the shoulder of the yoke, using a mallet or a copper hammer (Fig. 4A-12).

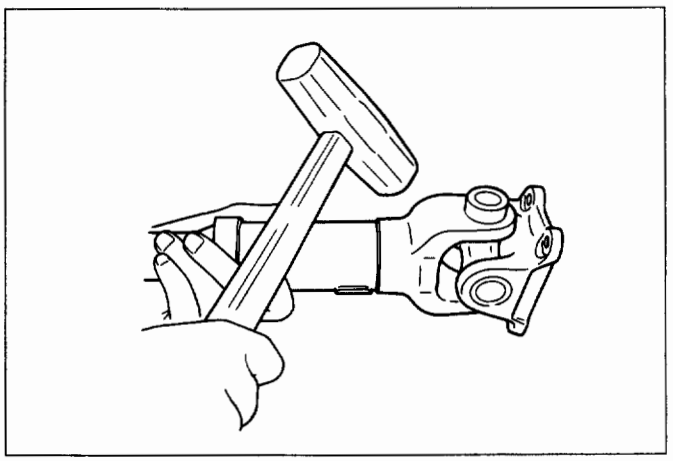

Fig. 4A-12

3. Spider with grease fitting

- Make sure of proper position for reinstallation by applying setting marks.

4. Flange Yoke

INSPECTION AND REPAIR

Make necessary correction or parts replacement if wear, damage,corrosion or any other abnormal condition is found through inspection.

NOTE:
When any part of the journal assembly (spider, needle roller bearing, grease fitting) requires replacement, be sure to replace the entire assembly.

Visual check

Check the following parts for wear, damage, noise or any other abnormal conditions.

- Spider
- Needle roller bearing
- Yoke
- Flange

Outside Diameter of Spider Pin (Fig. 4A-13)

mm (in)

Standard	Limit
18.46 (0.727)	18.36 (0.723)

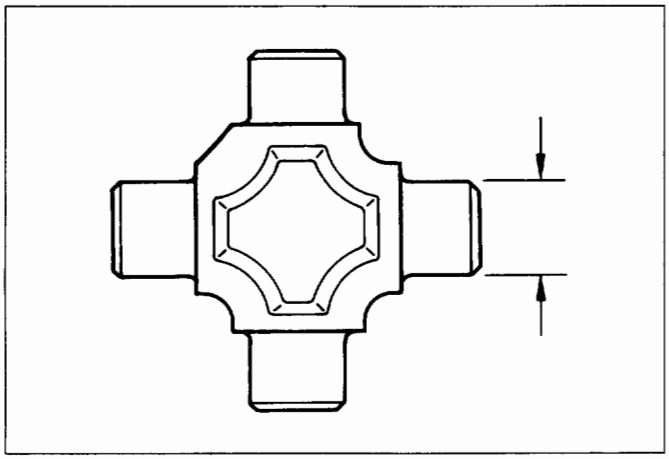

Fig. 4A-13

Propeller Shaft Run-Out

Support the ends of the propeller shaft on V-blocks and check for run-out by holding the probe of a dial indicator in contact with the center part of the shaft.
If the amount of run-out is beyond the standard value for assembly, correct with a bench press or replace the shaft with a new propeller shaft assembly (Fig. 4A-14).

mm (in)

Standard	Limit
0.3 (0.012)	0.5 (0.02)

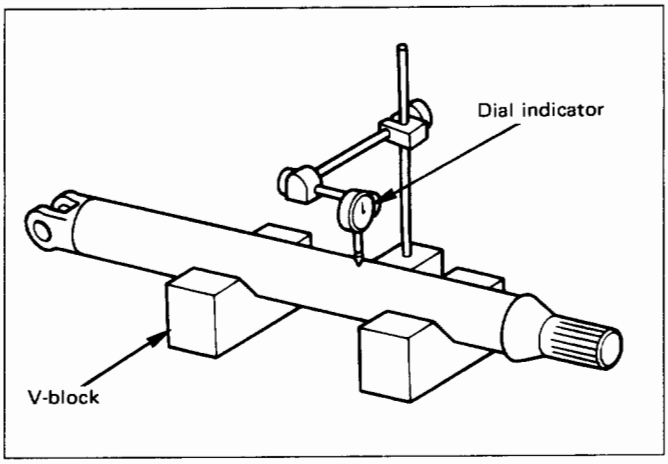

Fig. 4A-14

Play in Splines in Normal Direction of Rotation

Check the amount of play between the sleeve yoke and the propeller shaft spline in the direction of rotation, using a pointed feeler gauge (Fig. 4A-15).

mm (in)

Standard	Limit
0.073 - 0.156 (0.003 - 0.006)	0.3 (0.012)

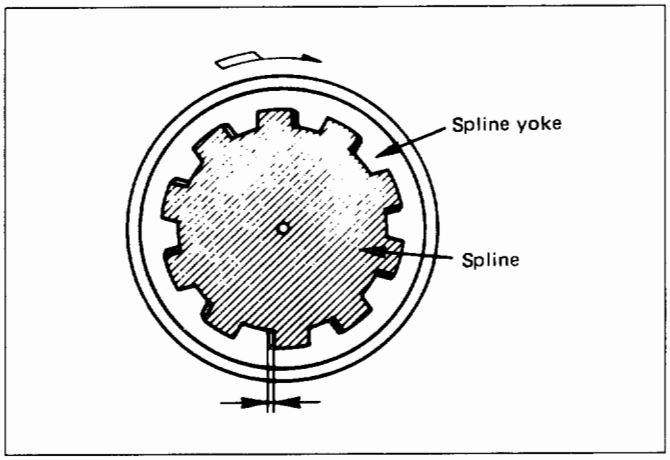

Fig. 4A-15

Play in the Universal Joint (Fig. 4A-16)

mm (in)

Limit	Less than 0.1 (0.004)

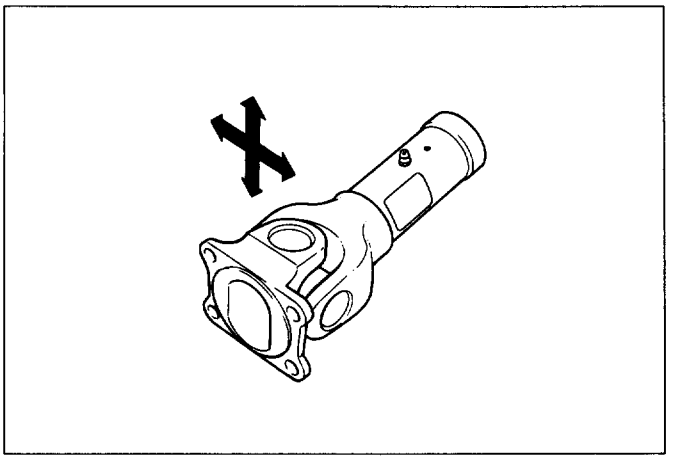

Fig. 4A-16

REASSEMBLY

4. Flange yoke

3. Spider with grease fitting

- Be sure to install the spider by aligning the setting marks made during disassembly.

2. Needle Roller Bearing

1) Apply a molybdenum-disulfide grease or a multi-purpose type grease NLGI No. 2 to inside of the bearing cap (Fig. 4A-17).

Grease Amount	g (oz)
Approx. 1.2 (0.042)	

2) Using either a mallet (or copper hammer) or a press, install the needle roller bearing into the yoke so that the snap ring can be installed in its groove (Fig. 4A-18).

CAUTION:

- **The needle roller bearing cannot be installed smoothly if it is set at an incorrect angle with the flange.**
- **Excessive hammering will damage the needle roller bearing.**

3) Align setting marks and join the yokes.

NOTE:
Assemble the spider and spline yoke so that their grease fittings are arranged on the same side (Fig. 4A-19).

1. Snap ring

NOTE:
Discard used snap rings and install new ones.

When the bearing cap is in position, select and attach a snap ring of suitable thickness so that the end play of the spider pin is held within 0.1 mm (0.004 in).

mm (in)

Snap ring thickness	Identification color
1.5 (0.059)	Blue
1.53 (0.060)	White
1.59 (0.063)	Yellow
1.62 (0.064)	Green
1.68 (0.066)	Not colored

NOTE:
Be sure to use snap rings of the same thickness on both sides.

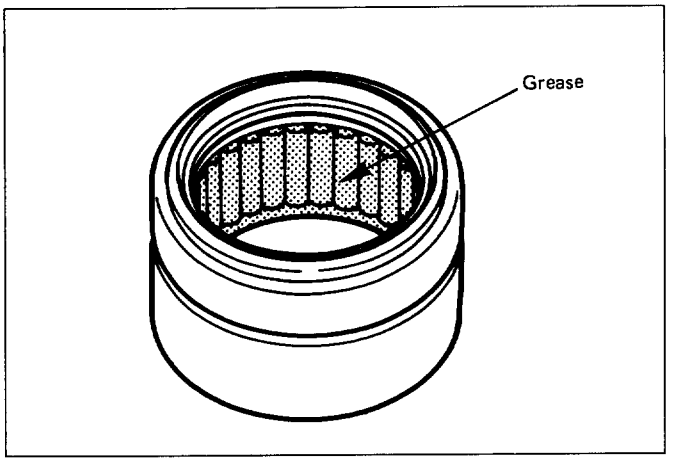

Fig. 4A-17

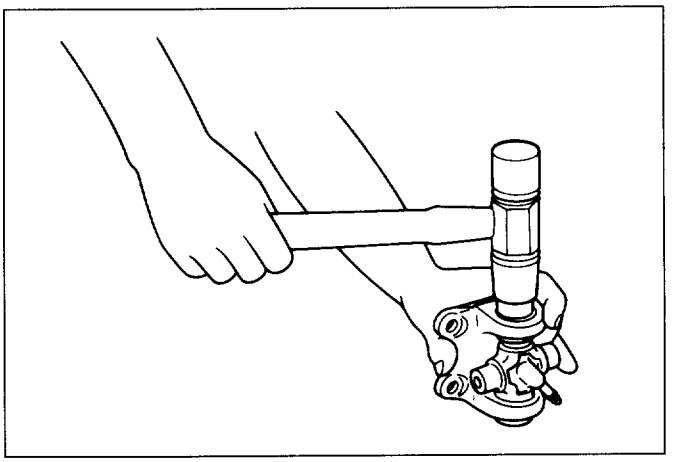

Fig. 4A-18

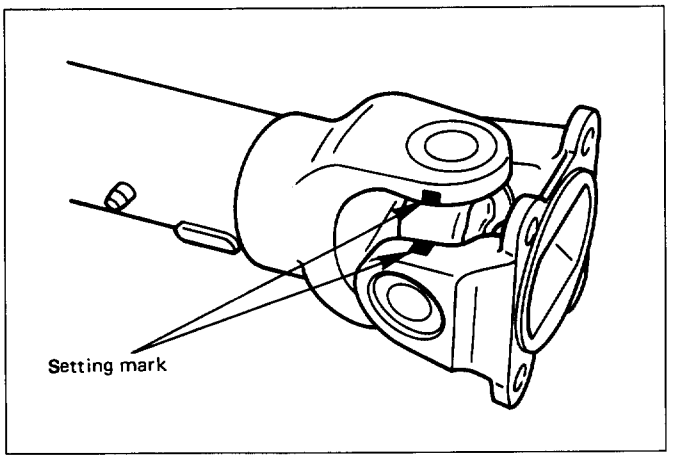

Fig. 4A-19

FRONT PROPELLER SHAFT

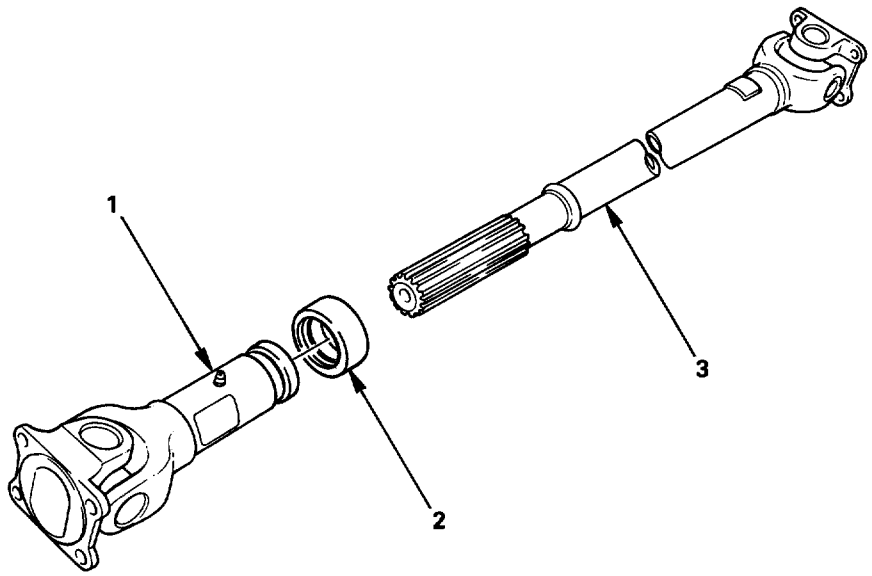

Disassembly steps
1. Sleeve yoke
2. Seal
3. Tube assembly

Reassembly steps
To reassemble, follow the disassembly steps in the reverse order.

Fig. 4A-20

DISASSEMBLY

1. **Sleeve yoke**
   - Apply alignment marks on the sleeve yoke and tube assembly (Fig. 4A-21).
2. **Seal**
3. **Tube assembly**

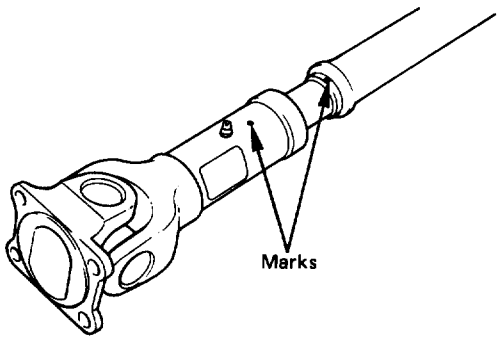

Fig. 4A-21

REASSEMBLY

3. **Tube assembly**
2. **Seal**
   - Discard used seal and install new one.
1. **Sleeve yoke**
   - Align the alignment marks (Fig. 4A-21).

UNIVERSAL JOINT (Front propeller shaft)

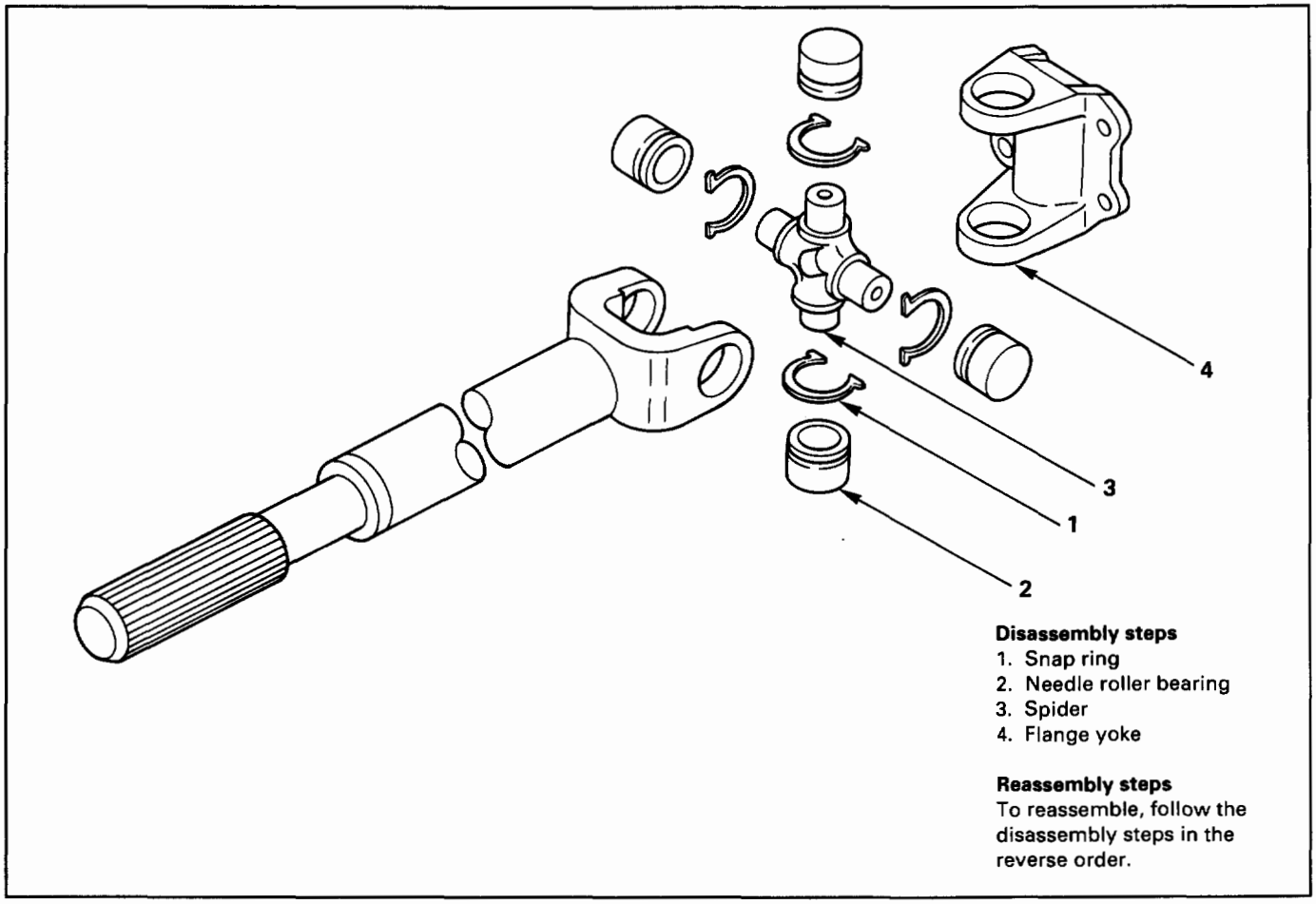

Fig. 4A-22

DISASSEMBLY

1. Snap ring

- Apply alignment marks on the yokes of the universal joint (Fig. 4A-23).

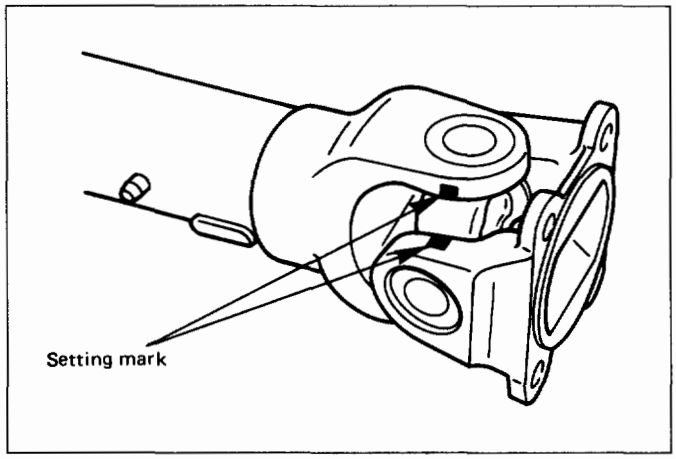

Fig. 4A-23

2. Needle roller bearing

- Tap out the bearing by gently striking the shoulder of the yoke, using a mallet or a copper hammer (Fig. 4A-24).

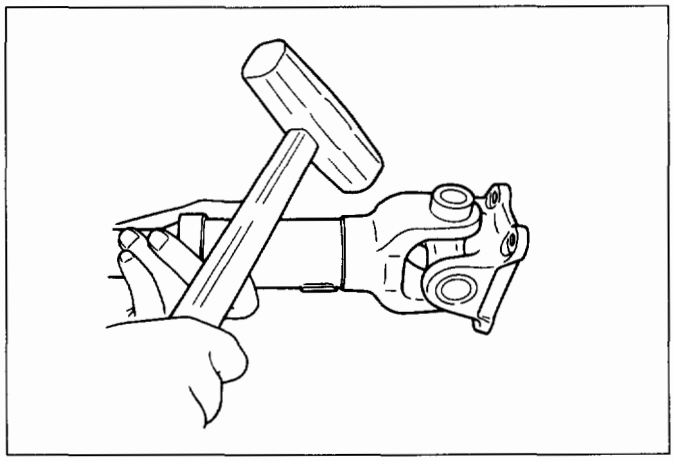

Fig. 4A-24

3. Spider

- Make sure of proper position for reinstallation by applying setting marks.

4. Flange Yoke

INSPECTION AND REPAIR

Make necessary correction or parts replacement if wear, damage,corrosion or any other abnormal condition is found through inspection.

NOTE:
When any part of the journal assembly (spider, needle roller bearing) requires replacement, be sure to replace the entire assembly.

Visual Check

Check the following parts for wear, damage, noise or any other abnormal conditions.

- Spider
- Needle roller bearing
- Yoke
- Flange

Outside Diameter of Spider Pin (Fig. 4A-25)

mm (in)

Standard	Limit
17.00 (0.669)	16.90 (0.665)

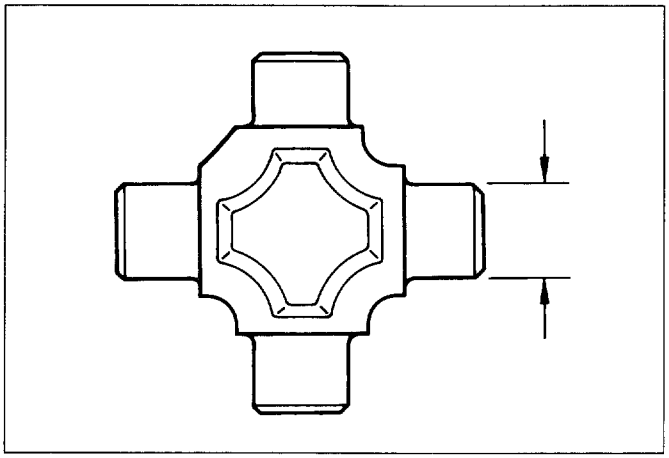

Fig. 4A-25

Propeller Shaft Run-Out

Support the ends of the propeller shaft on V-blocks and check for run-out by holding the probe of a dial indicator in contact with the center part of the shaft.
If the amount of run-out is beyond the standard value for assembly, correct with a bench press or replace the shaft with a new propeller shaft assembly (Fig. 4A-26).

mm (in)

Standard	Limit
0.3 (0.012)	0.5 (0.02)

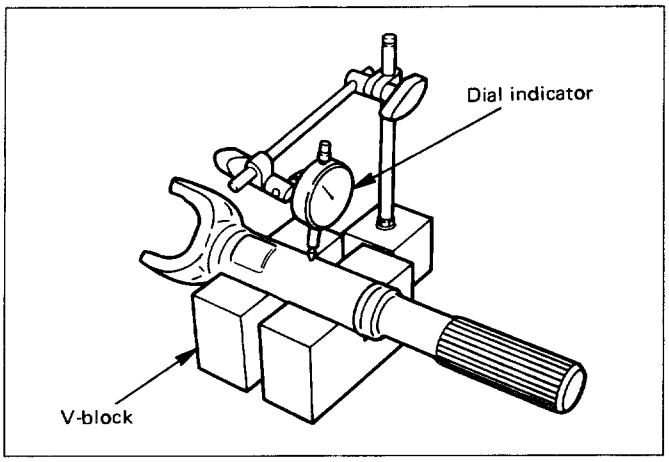

Fig. 4A-26

Play in Splines in Normal Direction of Rotation

Check the amount of play between the sleeve yoke and the propeller shaft spline in the direction of rotation, using a pointed feeler gauge (Fig. 4A-27).

mm (in)

Standard	Limit
0.073 - 0.156 (0.003 - 0.006)	0.3 (0.012)

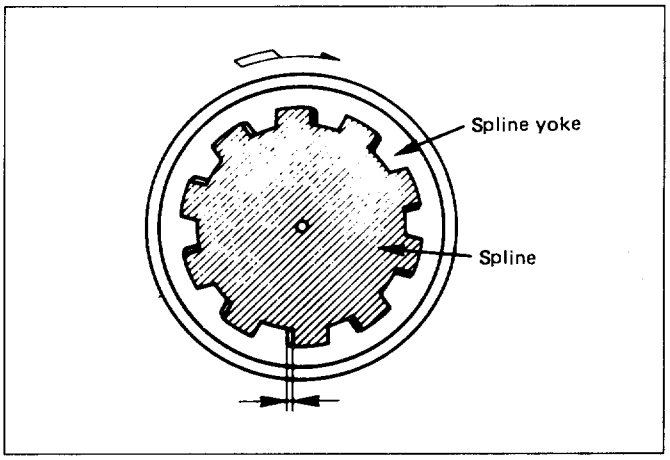

Fig. 4A-27

Play in the Universal Joint (Fig. 4A-27)

mm (in)

Limit	Less than 0.1 (0.004)

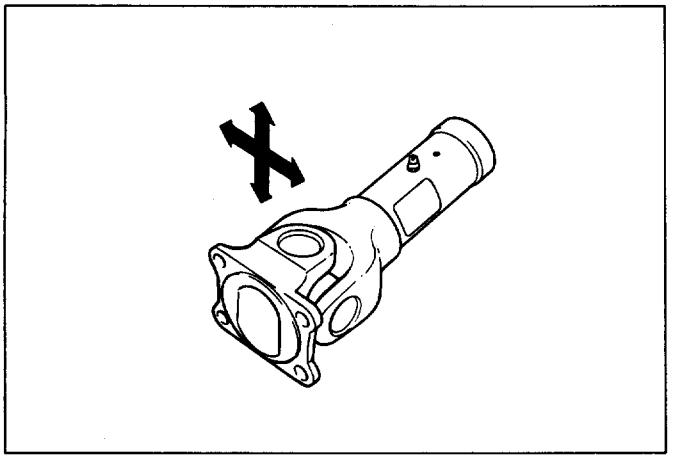

Fig. 4A-28

REASSEMBLY

4. Flange yoke

3. Spider

- Be sure to install the spider by aligning the setting marks made during disassembly.

2. Needle roller bearing

1) Apply a molybdenum-disulfide grease or a multi-purpose type grease NLGI No. 2 to inside of the bearing cap (Fig. 4A-29).

Grease Amount	g (oz)
Approx. 1.2 (0.042)	

2) Using either a mallet (or copper hammer) or a press, install the needle roller bearing into the yoke so that the snap ring can be installed in its groove (Fig. 4A-30).

CAUTION:

- **The needle roller bearing cannot be installed smoothly if it is set at an incorrect angle with the flange.**
- **Excessive hammering will damage the needle roller bearing.**

3) Align setting marks and join the yokes (Fig. 4A-31).

2. Snap ring

NOTE:
Discard used snap rings and install new ones.

When the bearing cap is in position, select and attach a snap ring of suitable thickness so that the end play of the spider pin is held within 0.1 mm (0.004 in).

mm (in)

Snap ring thickness	Identification color
1.5 (0.059)	Blue
1.53 (0.060)	White
1.59 (0.063)	Yellow
1.62 (0.064)	Green
1.68 (0.066)	Not colored

NOTE:
Be sure to use snap rings of the same thickness on both sides.

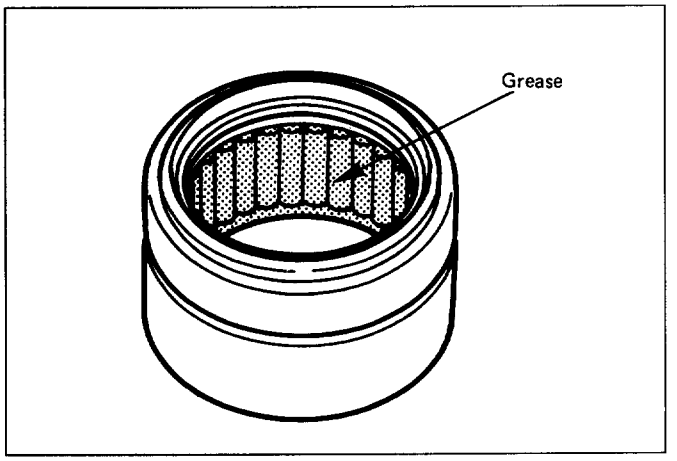

Fig. 4A-29

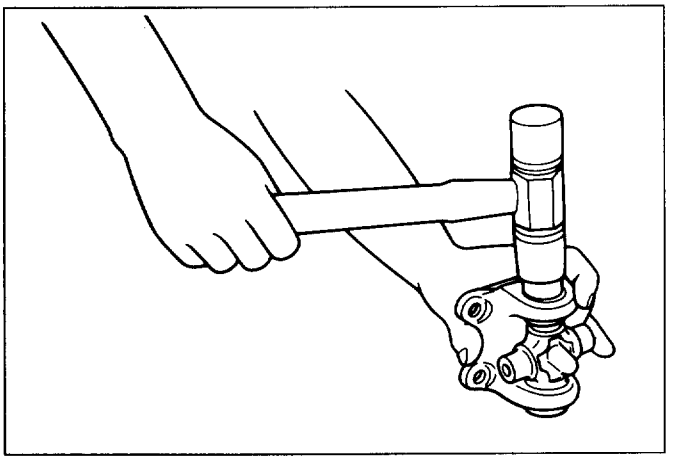

Fig. 4A-30

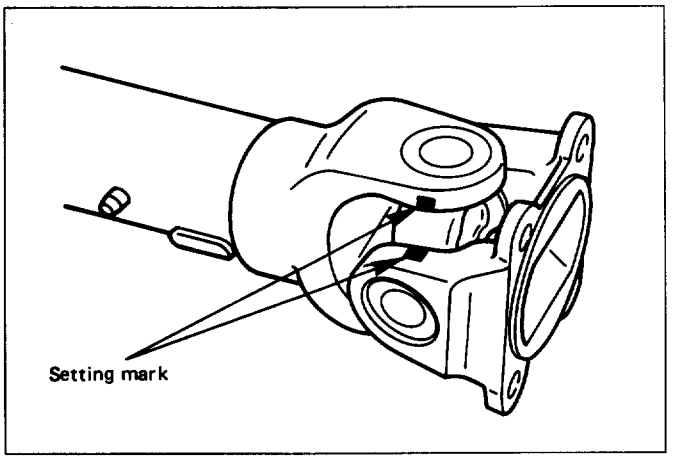

Fig. 4A-31

MAIN DATA AND SPECIFICATIONS

GENERAL SPECIFICATIONS

Engine	6VD1 (3.2 L)	
Transmission	M/T	A/T
Construction	Hollow steel tube with yoke and spider type universal joints.	
Outside diameter mm (in)		
Rear propeller shaft		
Short	68.9 (2.71)	68.9 (2.71)
Long	82.6 (3.25)	68.9 (2.71)
Front propeller shaft	40.0 (1.57)	40.0 (1.57)
Length mm (in)		
Rear propeller shaft		
Short	848 (33.39)	678 (26.69)
Long	1271 (50.04)	1102.5 (43.41)
Front propeller shaft	404 (15.91)	559 (22.01)

TORQUE SPECIFICATIONS

N·m (lb·ft)

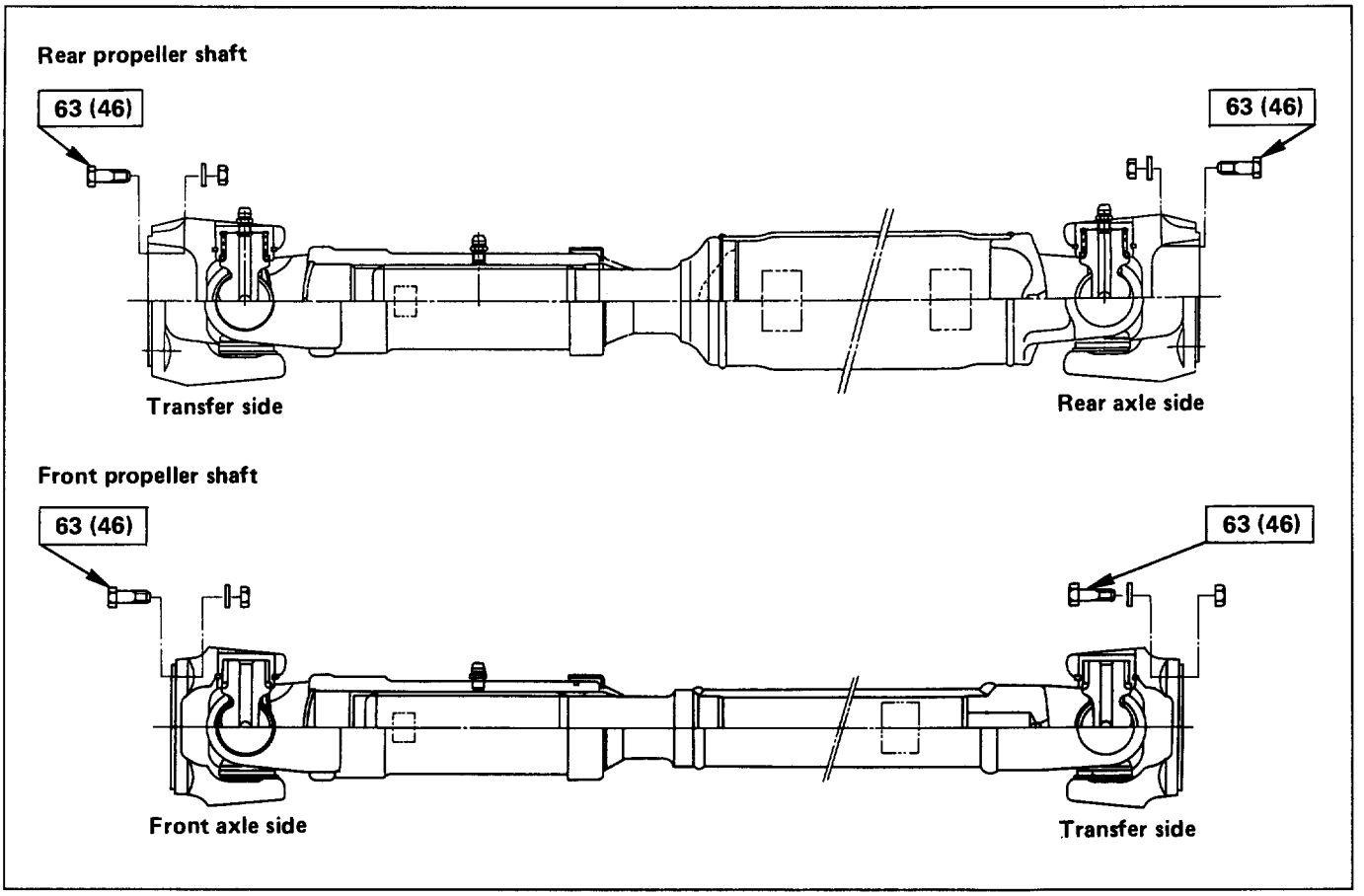

Fig. 4A-32

MEMO

SECTION 4B

REAR AXLE

CAUTION:
When fasteners are removed, always reinstall them at the same location from which they were removed. If a fastener needs to be replaced, use the correct part number fastener for that application. If the correct part number fastener is not available, a fastener of equal size and strength (or stronger) may be used. Fasteners that are not reused, and those requiring thread locking compound, will be called out. The correct torque values must be used when installing fasteners that require torque. If the above conditions are not followed, parts or system damage could result.

CONTENTS

General Description 4B- 1
Diagnosis of Rear Axle Noise 4B- 3
On-Vehicle Service 4B- 4
  Axle Housing 4B- 4
  Axle Shaft 4B- 7
  Pinion Oil Seal 4B-10
  Differential Assembly 4B-11
Unit Repair 4B-13
  Differential Assembly 4B-13
  Differential Cage Assembly 4B-23
  Limited Slip Differential 4B-27
Main Data and Specifications 4B-33
  General Specifications 4B-33
  Torque Specifications 4B-34
Special Tools 4B-35

GENERAL DESCRIPTION

The rear axle assembly is of the semi-floating type in which the vehicle weight is carried on the axle housing (Fig. 4B-1).
The center line of the pinion gear is below the center line of the ring gear (hypoid drive).
All parts necessary to transmit power from the propeller shaft to the rear wheels are enclosed in a banjo type axle housing.
The 8.7 inch ring gear rear axle uses a conventional ring and pinion gear set to transmit the driving force of the engine to the rear wheels. This gear set transfers this driving force at a 90 degree angle from the propeller shaft to the drive shafts.
The axle shafts are supported at the wheel end of the shaft by a roller bearing.
The pinion gear is supported by two tapered roller bearings. The pinion depth is set by a shim pack located between the gear end of the pinion and the roller bearing that is pressed onto the pinion. The pinion bearing preload is set by crushing a collapsible spacer between the bearings in the axle housing.

REAR AXLE ASSEMBLY

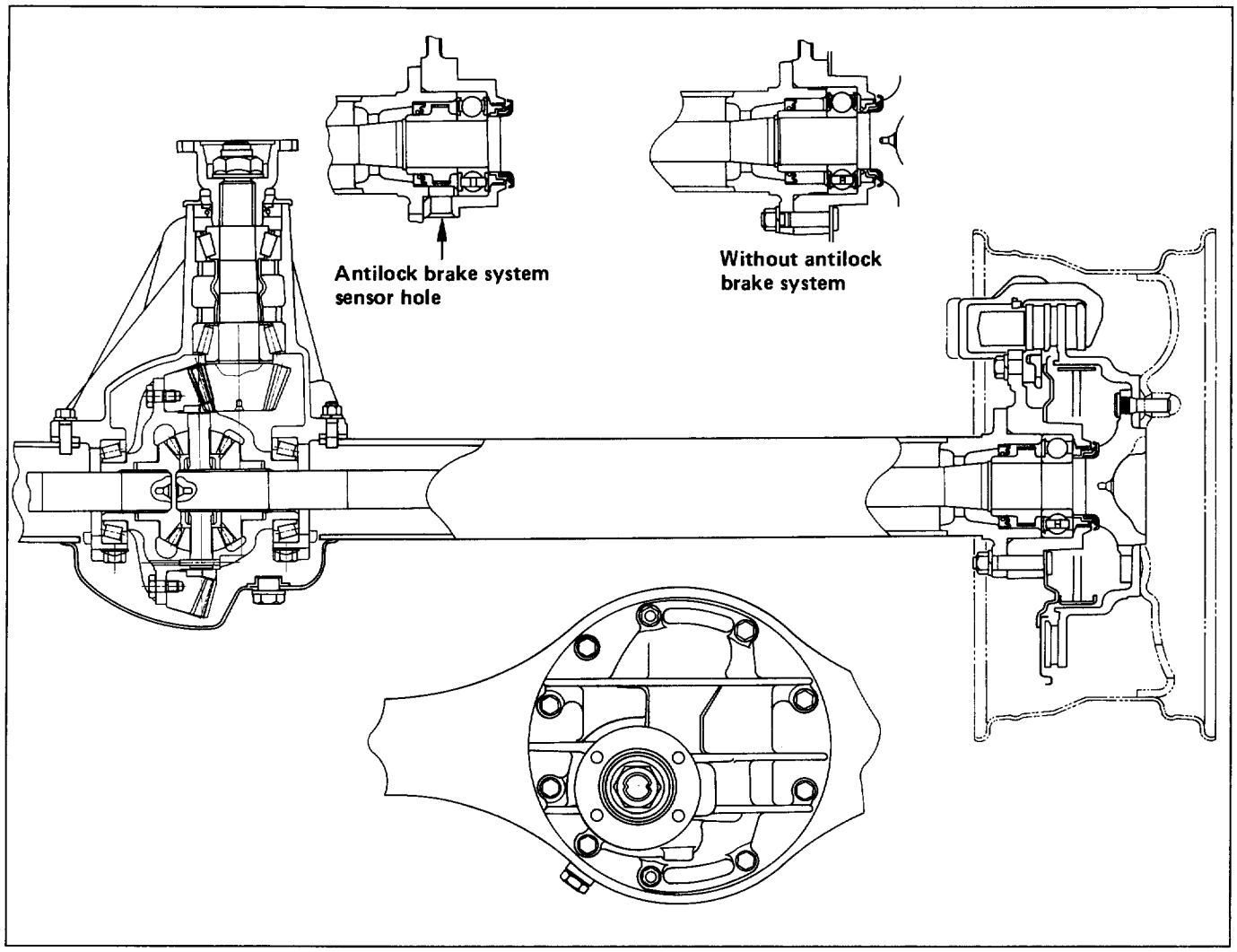

Fig. 4B-1

The ring gear is bolted onto the differential cage with 12 bolts.

The differential cage is supported in the axle housing by two tapered roller bearings. The differential and ring gear are located in relationship to the pinion by using selective shims and spacers between the bearing and the axle housing. To move the ring gear, shims are deleted from one side and an equal amount are added to the other side. These shims are also used to preload the bearings which are pressed onto the differential cage. Two bearing caps are used to hold the differential into the rear axle housing.

The differential is used to allow the wheels to turn at different rates of speed while the rear axle continues to transmit the driving force. This prevents tire scuffing when going around corners and prevents premature wear on internal axle parts.

The rear axle is sealed with a pinion seal, a seal at each axle shaft end, and by a liquid gasket between the differential carrier and the axle housing.

DIAGNOSIS OF REAR AXLE NOISE

Many noises that seem to come from the rear axle actually originate from other sources such as tires, road surface, wheel bearings, engine, transmission, muffler, or body drumming. Investigate to find the source of the noise before disassembling the rear axle. Rear axles, like any other mechanical device, are not absolutely quiet but should be considered quiet unless some abnormal noise is present.

To make a systematic check for axle noise, observe the following:

1. Select a level asphalt road to reduce tire noise and body drumming.
2. Check rear axle lubricant level to assure correct level, and then drive the vehicle far enough to thoroughly warm up the rear axle lubricant.
3. Note the speed at which noise occurs. Stop the vehicle and put the transmission in neutral. Run the engine speed slowly up and down to determine if the noise is caused by exhaust, muffler noise, or other engine conditions.
4. Tire noise changes with different road surfaces; axle noises do not. Temporarily inflate all tires to 344 kPa (50 psi) (for test purposes only). This will change noise caused by tires but will not affect noise caused by the rear axle.

   Rear axle nose usually stops when coasting at speeds under 48 km/h (30 mph); however, tire noise continues with a lower tone. Rear axle noise usually changes when comparing pull and coast, but tire noise stays about the same.

   Distinguish between tire noise and rear axle noise by noting if the noise changes with various speeds or sudden acceleration and deceleration. Exhaust and axle noise vary under these conditions, while tire noise remains constant and is more pronounced at speeds of 32 to 48 km/h (20 to 30 mph). Further check for tire noise by driving the vehicle over smooth pavements or dirt roads (not gravel) with the tires at normal pressure. If the noise is caused by tires, it will change noticeably with changes in road surface.
5. Loose or rough front wheel bearings will cause noise which may be confused with rear axle noise; however, front wheel bearing noise does not change when comparing drive and coast. Light application of the brake while holding vehicle speed steady will often cause wheel bearing noise to diminish. Front wheel bearings may be checked for noise by jacking up the wheels and spinning them or by shaking the wheels to determine if bearings are loose.
6. Rear suspension rubber bushings and spring insulators dampen out rear axle noise when correctly installed. Check to see that there is no link or rod loosened or metal-to-metal contact.
7. Make sure that there is no metal-to-metal contact between the floor and the frame.

After the noise has been determined to be in the axle, the type of axle noise should be determined, in order to make any necessary repairs.

GEAR NOISE

Gear noise (whine) is audible from 32 to 89 km/h (20 to 55 mph) under four driving conditions.

1. In drive under acceleration or heavy pull.
2. Driving under load or under constant speed.
3. When using enough throttle to keep the vehicle from driving the engine while the vehicle slows down gradually (engine still pulls slightly).
4. When coasting with the vehicle in gear and the throttle closed. The gear noise is usually more noticeable between 48 and 64 km/h (30 and 40 mph) and 80 and 89 km/h (50 and 55 mph).

BEARING NOISE

Bad bearings generally produce a rough growl or grating sound, rather than the whine typical of gear noise. Bearing noise frequently "wow-wows" at bearing rpm, indicating a bad pinion or rear axle side bearing. This noise can be confused with rear wheel bearing noise.

REAR WHEEL BEARING NOISE

Rear wheel bearing noise continues to be heard while coasting at low speed with transmission in the neutral. Noise may diminish by gentle braking. Jack up the rear wheels, spin them by hand and listen for noise at the hubs. Replace any faulty wheel bearings.

KNOCK AT LOW SPEEDS

Low speed knock can be caused by worn universal joints or a side gear hub counter bore in the cage that is worn oversize. Inspect and replace universal joints or cage and side gears as required.

BACKLASH CLUNK

Excessive clunk on acceleration and deceleration can be caused by a worn rear axle pinion shaft, a worn cage, excessive clearance between the axle and the side gear splines, excessive clearance between the side gear hub and the counterbore in the cage, worn pinion and side gear teeth, worn thrust washers, or excessive drive pinion and ring gear backlash. Remove worn parts and replace as required. Select close-fitting parts when possible. Adjust pinion and ring gear backlash.

ON-VEHICLE SERVICE

AXLE HOUSING

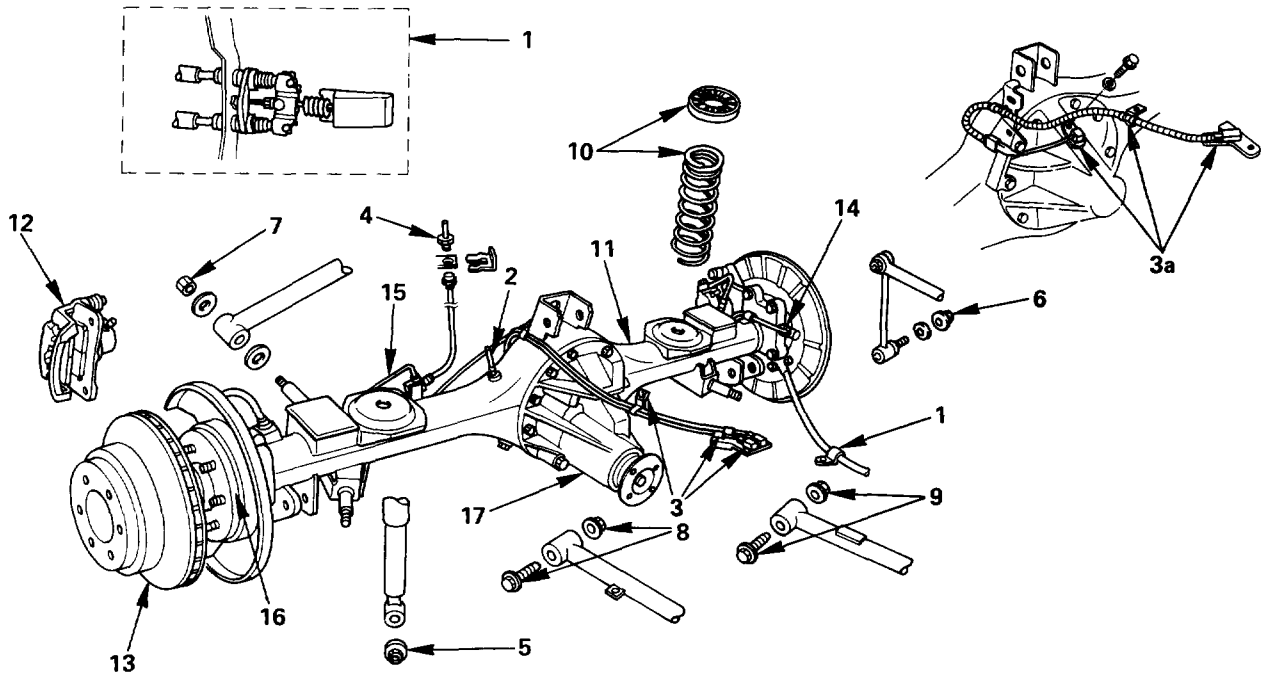

Removal steps
1. Parking brake cable
2. Breather hose
3. Antilock brake system (ABS) connector and bracket
3a. Rear wheel antilock (RWAL) speed sensor, bracket and harness connector
4. Flare nut
5. Nut
6. Nut
7. Nut
8. Bolt and nut
9. Bolt and nut
10. Coil spring and insulator
11. Axle housing assembly
12. Brake caliper
13. Brake disc
14. ABS speed sensor and harness
15. Brake pipe
16. Axle shaft assembly
17. Differential assembly

Installation steps
To install, follow the removal steps in the reverse order.

Fig. 4B-2

REMOVAL

Preparations:
- Raise the vehicle and support it with suitable safety stands.
  The hoist must remain under the rear axle housing.
- Take out brake fluid. Refer to Section 5A2 "DISC BRAKES".
- Remove rear wheels and tires. Refer to Section 3E "WHEELS AND TIRES".
- Remove propeller shaft. Refer to Section 4A "PROPELLER SHAFT".
- Drain the rear axle oil into a proper container.

1. **Parking brake cable**
   - Release the connection between the cable fixing clip equalizer. Refer to Section 5C "PARKING BRAKES".
2. **Breather hose**
   - Move the clip aside and pull out the breather hose.
3. **ABS connector and bracket**
   - Disconnect the connectors and remove the brackets attached to the frame and center link (Fig. 4B-3).

3a. **RWAL speed sensor, bracket and harness connector**
   - Disconnect the connector and remove the brackets attached to the frame and center link.

4. **Brake tube flare nut**
   - Loosen the flare nut, remove the clip and take out the brake tube.

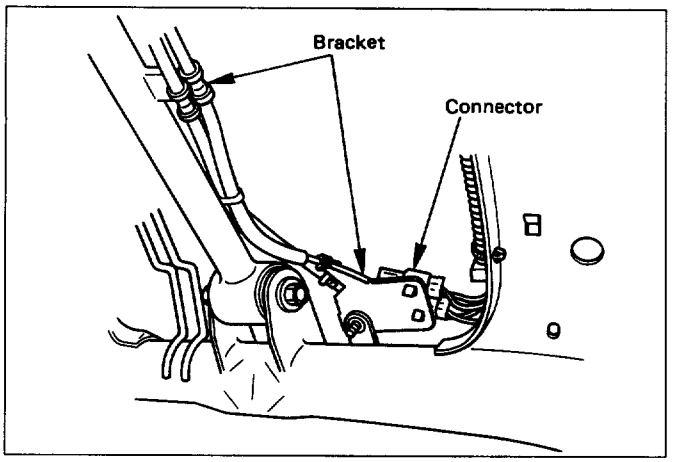

Fig. 4B-3

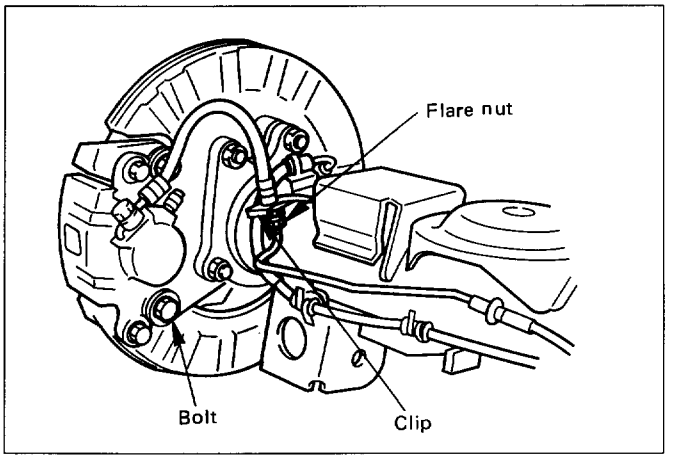

Fig. 4B-4

5. **Nut**
   - Remove the shock absorber fixing nut from the axle housing.
6. **Nut**
   - Remove the stabilizer linkage mounting nut from the axle housing.
7. **Nut**
   - Remove the lateral rod fixing nut from the axle housing.
8. **Bolt and nut**
   - Remove the center link mounting bolt and nut from the axle housing.
9. **Bolt and nut**
   - Remove the trailing link fixing bolt and nut from the axle housing.
10. **Coil spring and insulator**
    - Jack down and remove the coil spring and insulator.
11. **Axle housing assembly**
    - Axle housing assembly can be separated from the vehicle on completion of steps 1 - 10.
12. **Brake caliper**
    - Remove the brake caliper fixing bolt, loosen the flare nut, release the clip and take out the brake caliper together with the flexible hose (Fig. 4B- 4).
13. **Brake disc**
14. **Antilock brake system speed sensor and harness**
    - Remove the speed sensor fixing bolt and the clip and bracket on the axle housing.
15. **Brake pipe**
    - Remove the clip and fixing bolt on the axle housing and take out the brake pipe.
16. **Axle shaft assembly**
    - Remove the bearing holder fixing nut and take out the axle shaft assembly. Refer to "AXLE SHAFT" in this section.
    - Be sure not to damage the oil seal by the spline of the shaft.
17. **Differential assembly**
    - Refer to "DIFFERENTIAL ASSEMBLY" in this section.

OIL SEAL REPLACEMENT

- Remove the oil seal, carefully not to damage the housing, and mount new oil seal using special tools (Fig. 4B-5).

Oil seal installer: J-39210

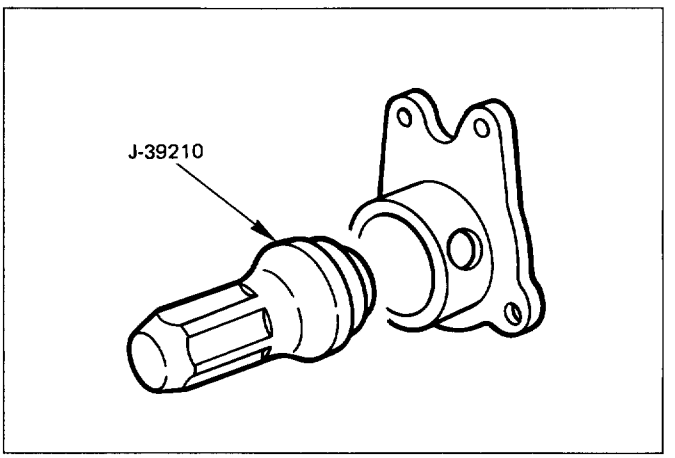

Fig. 4B-5

INSTALLATION

17. **Differential assembly**
    - Refer to "DIFFERENTIAL ASSEMBLY" in this section.
16. **Axle shaft assembly**
    - Tighten the bearing holder mounting nut to the specified torque.

Torque N·m (lb·ft)	74 (54)

    - Be sure not to damage the oil seal by the spline of the shaft.
15. **Brake pipe**
14. **Antilock brake system (ABS) speed sensor and harness**
    - Refer to Section 5A4 "4-WHEEL ANTI-LOCK BRAKE SYSTEM (ABS)".
13. **Brake disc**
12. **Brake caliper**
    - Refer to Section 5A2 "DISC BRAKES".
11. **Axle housing assembly**
10. **Coil spring and insulator**
9. **Bolt and nut**
    - For the procedures in Items 9-5, refer to Section 3D "REAR SUSPENSION".
8. **Bolt and nut**
7. **Nut**
6. **Nut**
5. **Nut**
4. **Brake tube flare nut**
    - Refer to Section 5A2 "DISC BRAKES".

3a. **Rear Wheel Antilock (RWAL) speed sensor, bracket and harness connector**
    - Tighten the speed sensor bolt to the specified torque.

Torque N·m (lb·ft)	24 (18)

3. **ABS connector and bracket**
2. **Breather hose**
1. **Parking brake cable**
    - Refer to Section 5C "PARKING BRAKES".

AXLE SHAFT

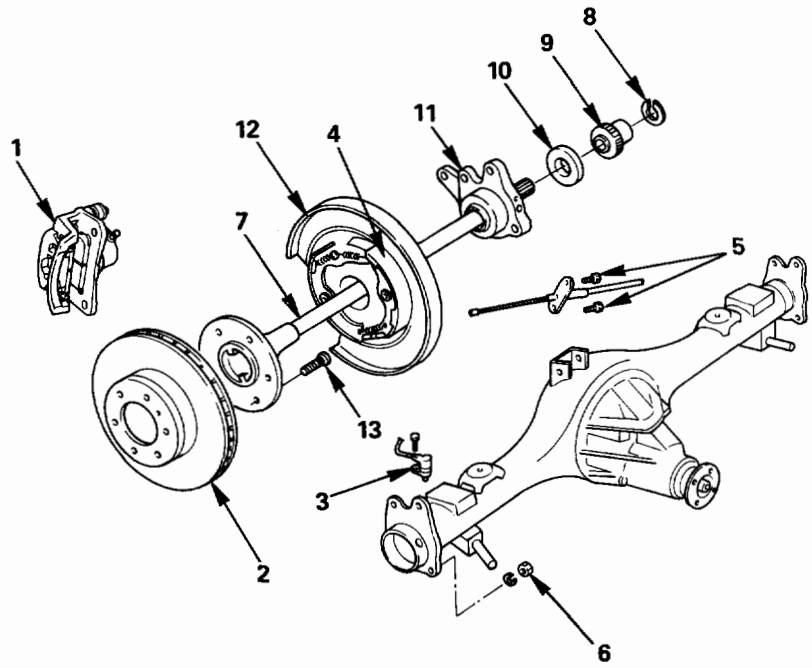

Removal steps
1. Brake caliper
2. Brake disc
3. Antilock brake system (ABS) speed sensor
4. Parking brake assembly
5. Bolt
6. Nut
7. Axle shaft assembly
8. Snap ring
9. Retainer
10. Bearing
11. Bearing holder
12. Back plate
13. Wheel pin

Installation steps
To install, follow the removal steps in the reverse order.

Fig. 4B-6

REMOVAL

Preparation:
- Raise the vehicle.
- Remove tires and wheels. Refer to Section 3E "WHEELS & TIRES".

1. **Brake caliper**
   - Use a wire to attach the brake caliper to the frame. Refer to Section 5A2 "DISC BRAKES".
2. **Brake disc**
3. **ABS sensor (If equipped with ABS)**
4. **Parking brake assembly**
   - Refer to Section 5C "PARKING BRAKES".
5. **Bolt (Behind the back plate)**
   - Remove the parking brake cable mounting bolts (Fig. 4B-7).

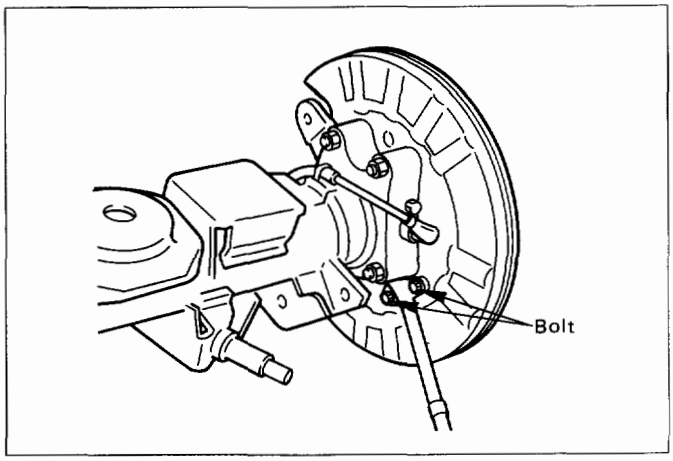

Fig. 4B-7

6. **Nut**
   - Remove the bearing holder mounting nuts.
7. **Axle shaft assembly**

   NOTE:
   - Be sure not to damage the oil seal.
8. **Snap ring**
9. **Retainer**
   - Using a special tool and press, remove together with the bearing holder (Fig. 4B-8).

Bearing remover: J-39211

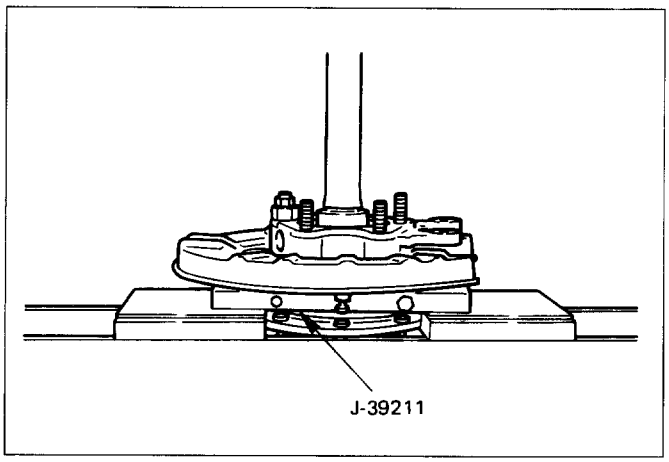

Fig. 4B-8

10. **Bearing**
11. **Bearing holder**
12. **Back plate**
13. **Wheel pin (Fig. 4B-9)**
    - Remove the wheel pins using a special tool. Remover: J-6627-A

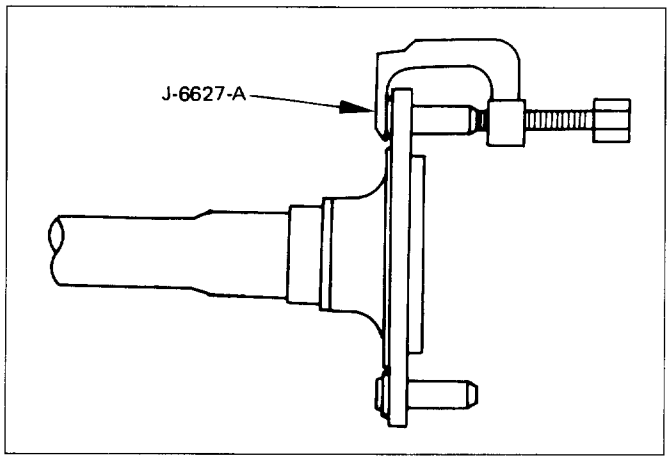

Fig. 4B-9

INSPECTION AND REPAIR

Make necessary correction or parts replacement if wear, corrosion or any other abnormal condition are found through inspection.

Visual check

Check the following parts for wear, damage, noise or any other abnormal conditions.
- Axle shaft
- Bearing

AXLE SHAFT

- When checking the axle shaft, pay special attention to the splined portions and replace the shaft if distortion or step wear is noticeable. Correct slight step wear with a grinder (Fig. 4B-10).

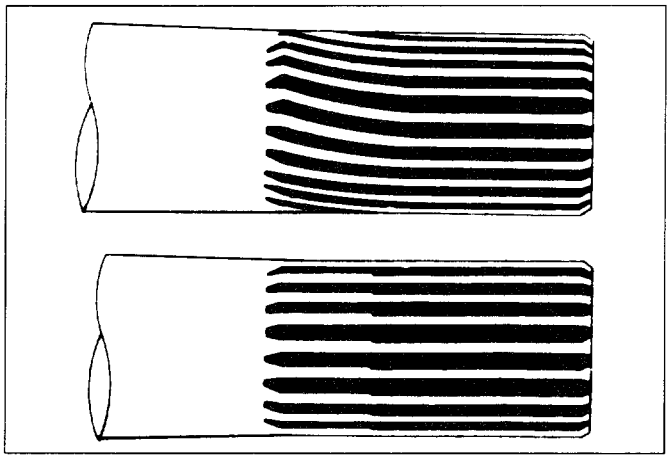

Fig. 4B-10

Axle shaft run-out (Fig. 4B-11)

Limit	mm (in)	1.0 (0.039)

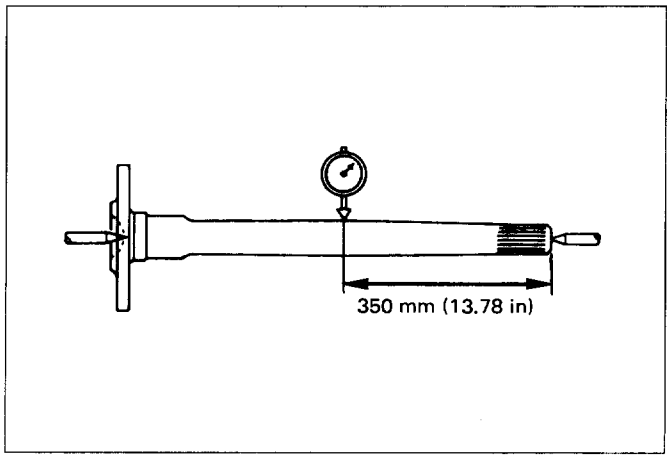

Fig. 4B-11

Axle shaft flange run-out (Fig. 4B-12)

Limit mm (in)	0.08 (0.003)

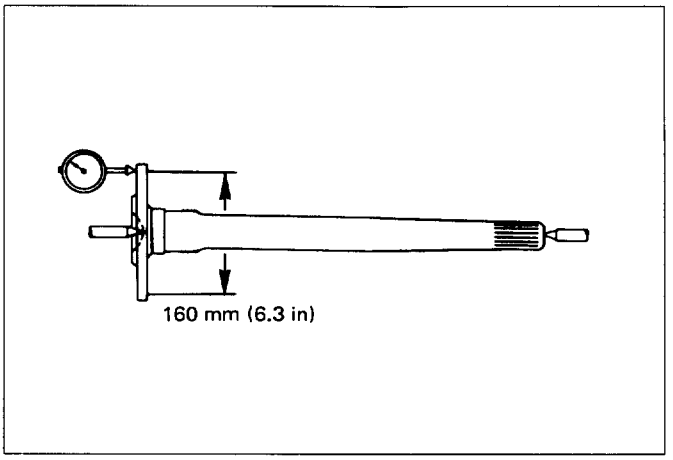

Fig. 4B-12

OIL SEAL REPLACEMENT

- Remove the oil seal carefully not to damage the bearing holder bore (Fig. 4B-13).
  When installing, use special tool.
  Oil seal installer: J-39379

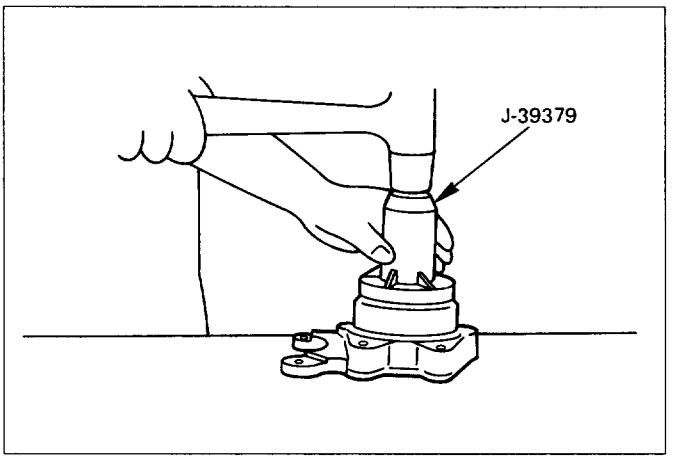

Fig. 4B-13

INSTALLATION

13. **Wheel pin**
12. **Back plate**
11. **Bearing holder**
10. **Bearing**
9. **Retainer**
    - Using a special tool, press fit together with the bearing (Fig. 4B-14).
      Bearing installer: J-39212

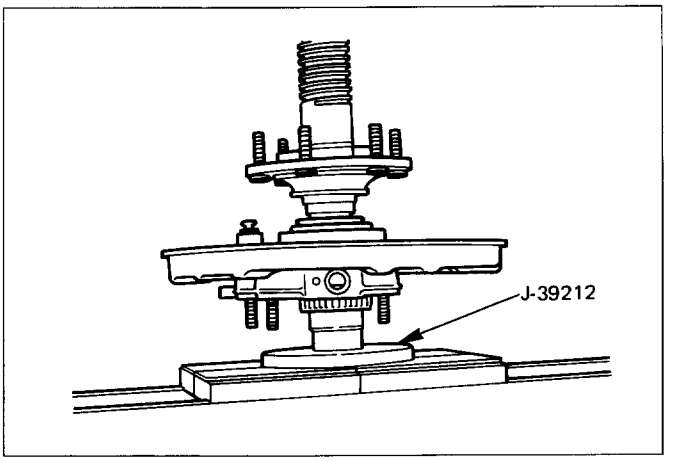

Fig. 4B-14

8. **Snap ring**
7. **Axle shaft assembly**
   NOTE:
   Be sure not to damage the oil seal.
6. **Nut**
   - Tighten the bearing holder mounting nut to the specified torque.

Torque N·m (lb·ft)	74 (54)

5 **Bolt (Behind the back plate)**
   - Fix the parking brake cable mounting bolt.
4. **Parking brake assembly**
   - Refer to Section 5C "PARKING BRAKES".
3. **Antilock brake system sensor (If equipped with antilock brake system)**
2. **Brake disc**
1 **Brake caliper**
   - Refer to Section 5A2 "DISC BRAKES".

PINION OIL SEAL

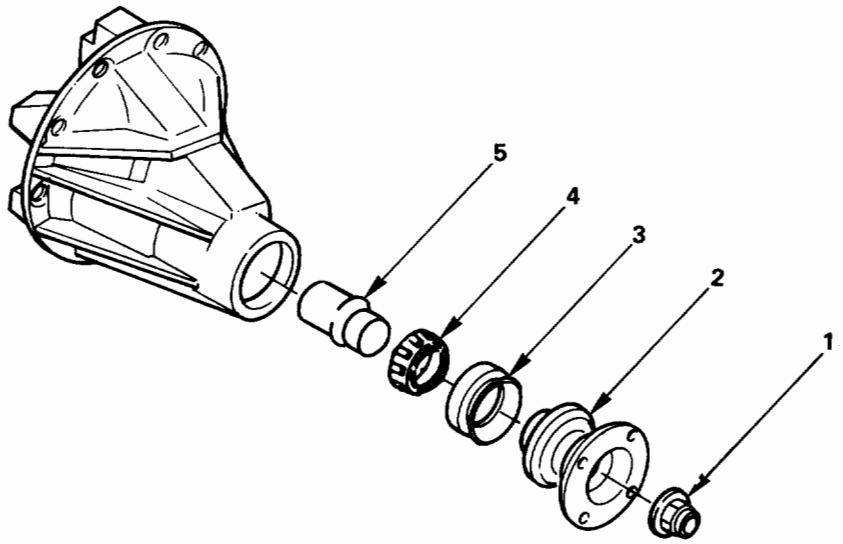

Removal steps
1. Flange nut
2. Flange
3. Oil seal
4. Outer bearing
5. Collapsible spacer

Installation steps
To install, follow the removal steps in the reverse order.

Fig. 4B-15

REMOVAL

Preparation:

- Remove the rear propeller shaft. Refer to Section 4A "PROPELLER SHAFT".
- Drain the rear axle oil.

1. Flange nut

- Remove flange nut using special tool after raising up its staked parts completely.

Pinion flange holder: J-37221

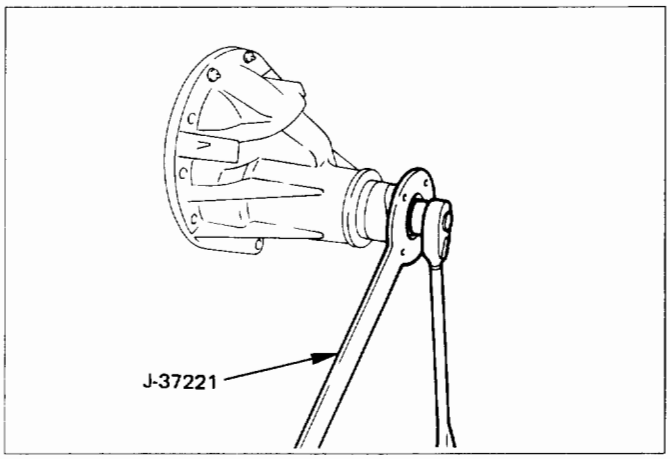

Fig. 4B-16

2. Flange

3. Oil seal

4. Outer bearing

- Using special tool, remove the outer bearing (Fig. 4B-16a).
  Remover: J-39602

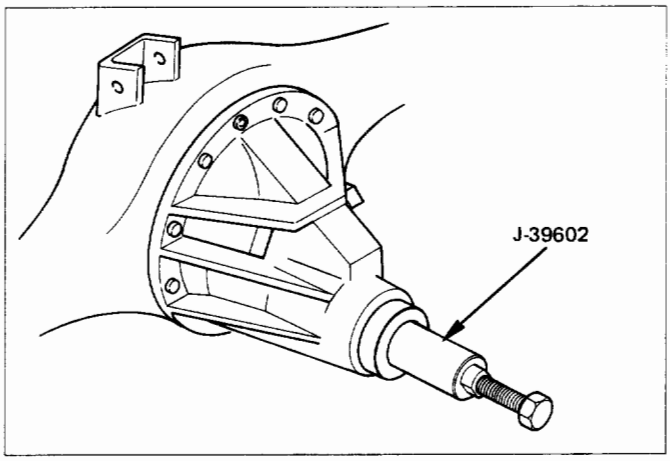

Fig. 4B-16a

5. Collapsible spacer

INSPECTION AND REPAIR

Make necessary correction or parts replacement if wear, damage, corrosion or any other abnormal condition are found through inspection.
Check the following parts.

- Seal surface of the pinion.
- Cage bore for burns.

INSTALLATION

5. **Collapsible spacer**
   - Discard the used collapsible spacer and install a new one.
4. **Outer bearing**
   NOTE:
   - Do not drive in, but just temporarily set in the outer bearing by hand, which should be indirectly pressed in finally by tightening the flange nut.
3. **Oil seal**
   - Use the seal installer to install a new oil seal that has been soaked in axle lubricant.
     Installer: J-37263

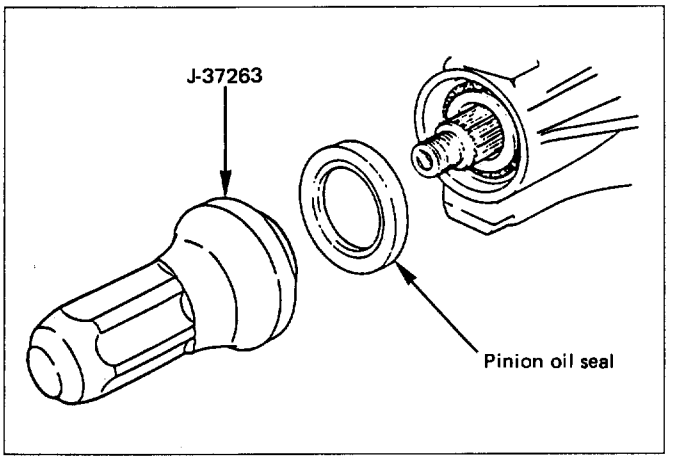

Fig. 4B-17

2. **Flange**
1. **Flange nut**
   - Refer to "DIFFERENTIAL ASSEMBLY (UNIT REPAIR)" for flange nut reassembly in this section.

   NOTE:
   - Discard the used nut and install a new one.

DIFFERENTIAL ASSEMBLY

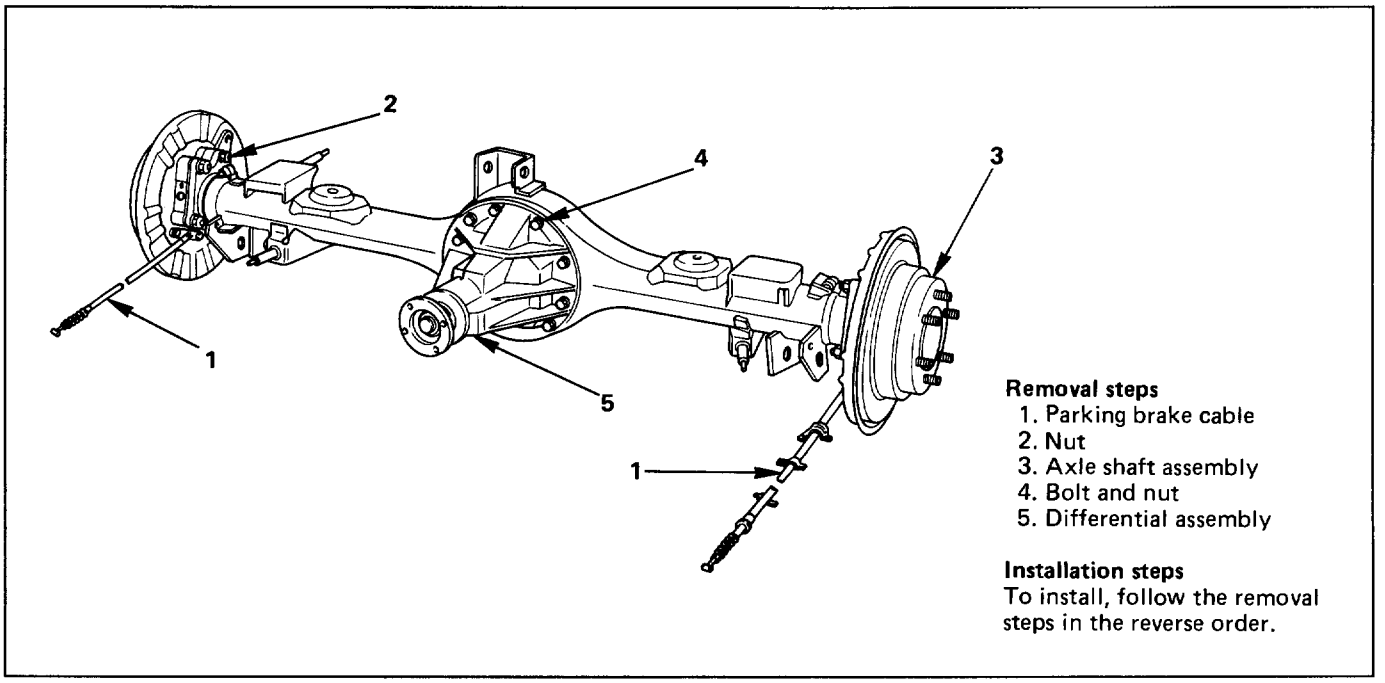

Fig. 4B-18

REMOVAL

Preparations:

- Jack up and support the frame with stands.
- Remove the wheel and tire. Refer to Section 3E "WHEELS & TIRES".
- Drain the differential oil.
- Remove the propeller shaft. Refer to Section 4A "PROPELLER SHAFT".
- Remove the RWAL speed sensor. Refer to Section 5A3 "REAR WHEEL ANTILOCK BRAKE SYSTEM (RWAL)".
- Remove the ABS speed sensor. Refer to Section 5A4 "4-WHEEL ANTI-LOCK BRAKE SYSTEM (ABS)".

1. **Parking brake cable**
   - Remove the parking brake cable fastening clip and disconnect the equalizer section. Refer to Section 5C "PARKING BRAKES".
2. **Nut**
   - Remove the bearing holder fixing nuts.
3. **Axle shaft assembly**
   - Be sure not to damage the oil seal by axle shaft.
4. **Bolt and nut**
   - Remove differential carrier mounting bolts and nuts.
5. **Differential assembly**

INSTALLATION

5. **Differential assembly**
   - Clean the contact surfaces of the axle and differential carrier.
   - As shown in the drawing, apply Three Bond TB1215 or equivalent (Fig. 4B-19).

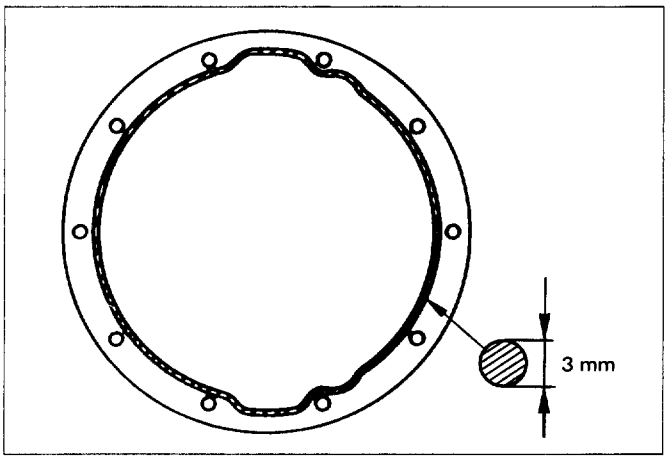

Fig. 4B-19

4. **Bolt and nut**
   - Tighten the differential carrier mounting bolts and nuts to the specified torque.

Torque N·m (lb·ft)	Nuts	44 (33)
	Bolts	66 (48)

3. **Axle shaft assembly**
   - Be sure not to damage the oil seal by axle shaft.
2. **Nut**
   - Refer to "AXLE SHAFT" in this section.
1. **Parking brake cable**
   - Refer to Section 5C "PARKING BRAKES".

NOTE:
After completing the assembling work, fill the prescribed gear oil to the filler hole.

Lubricant capacity liter (US gal)	1.8 (0.5)

- Tighten the oil filler plug to the specified torque.

Torque N·m (lb·ft)	78 (58)

UNIT REPAIR

DIFFERENTIAL ASSEMBLY

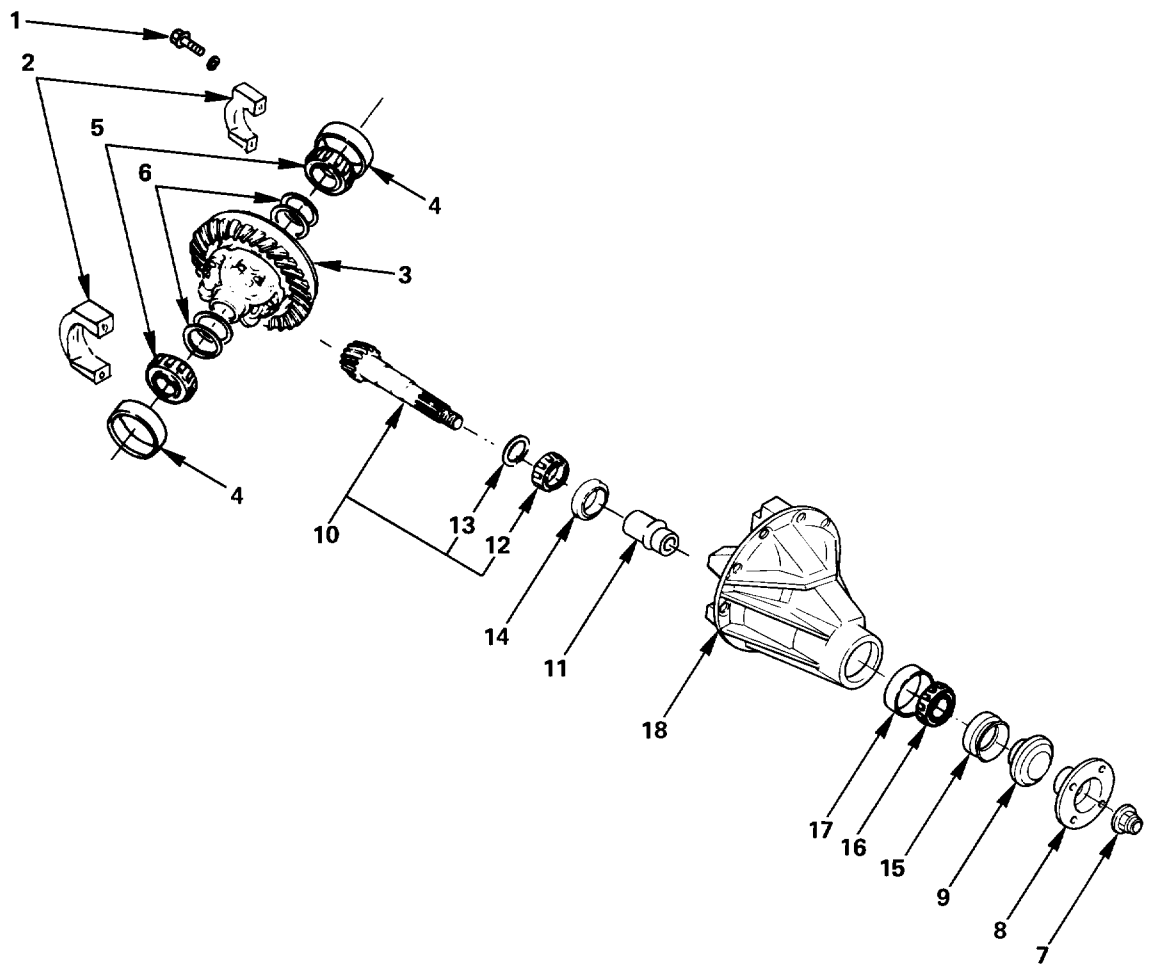

Disassembly steps
1. Bolt
2. Bearing cap
3. Differential cage assembly
4. Side bearing outer race
5. Side bearing
6. Adjust shim
7. Flange nut
8. Flange assembly
9. Dust cover
10. Drive pinion shaft assembly
11. Collapsible spacer
12. Inner bearing
13. Adjust shim
14. Inner bearing outer race
15. Oil seal
16. Outer bearing
17. Outer bearing outer race
18. Differential carrier

Reassembly steps
18. Differential carrier
17. Outer bearing outer race
14. Inner bearing outer race
13. Adjust shim
12. Inner bearing
11. Collapsible spacer
10. Drive pinion shaft assembly
16. Outer bearing
15. Oil seal
9. Dust cover
8. Flange assembly
7. Flange nut
6. Adjust shim
5. Side bearing
4. Side bearing outer race
3. Differential cage assembly
2. Bearing cap
1. Bolt

Fig. 4B-20

DISASSEMBLY

- Using special tools, fix the differential assembly to the bench (Fig. 4B-21).
  Holding fixture: J-37264
  Holding fixture base: J-3289-20

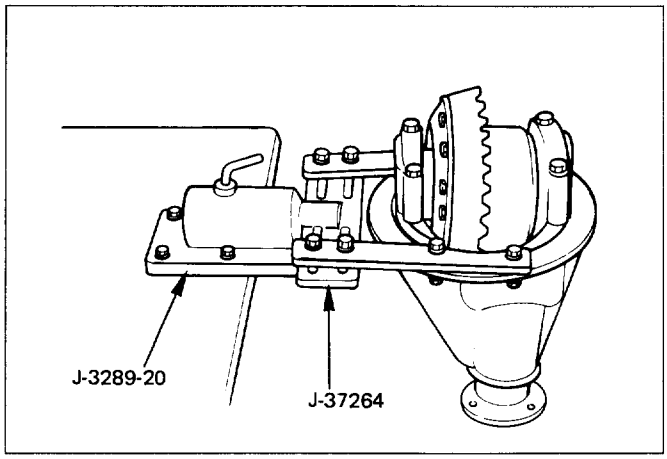

Fig. 4B-21

1. **Bolt**
2. **Bearing cap**
   - Apply a setting mark to the side bearing cap and the differential carrier (Fig. 4B-22).

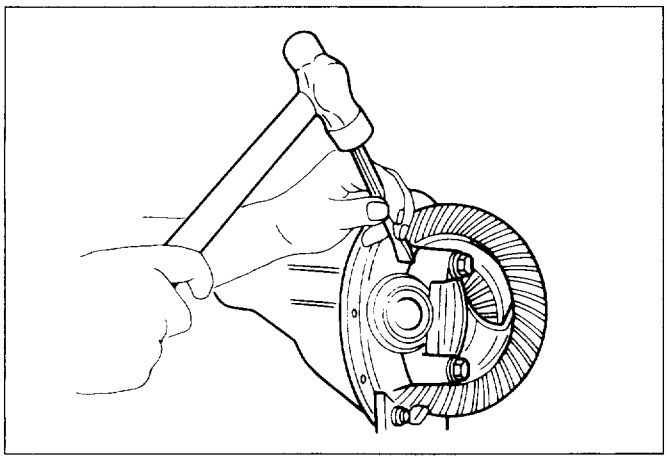

Fig. 4B-22

3. **Differential cage assembly**
4. **Side bearing outer race**
   - After removal, keep the right and left hand side bearing assemblies separate to maintain inner and outer race combinations.
5. **Side bearing**
   - Using special tools, remove the side bearing (Fig. 4B-23).
   Remover: J-22888
   Adapter: J-8107-4

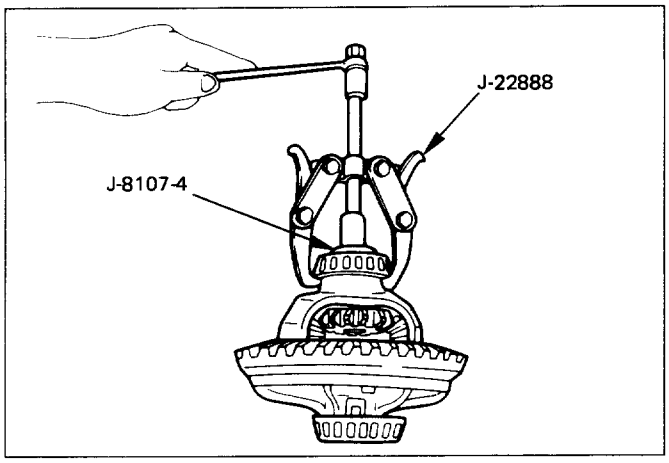

Fig. 4B-23

6. **Adjust shim**
   - Note the thickness and position of the shims removed.
7. **Flange nut**
   - Remove the flange nut using special tool after raising up its staked parts completely (Fig. 4B-24).
   Holding wrench: J-37221

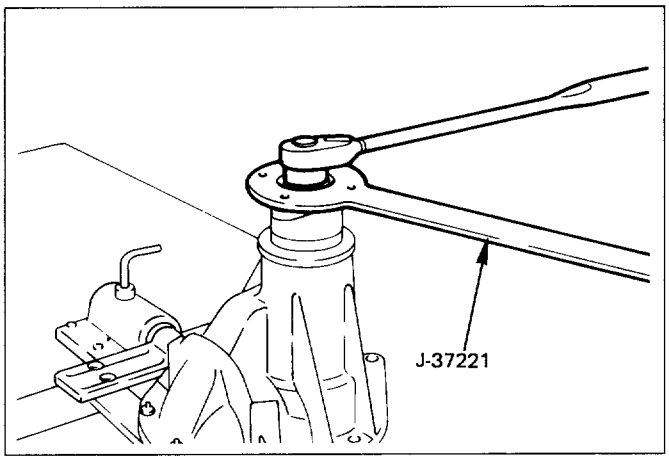

Fig. 4B-24

8. **Flange assembly**
9. **Dust cover**
10. **Drive pinion shaft assembly**
    - Remove the drive pinion assembly using a soft metal rod and a hammer (Fig. 4B-25).

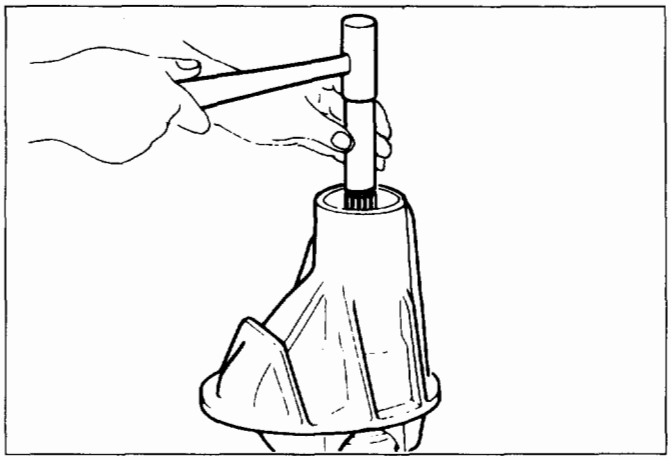

Fig. 4B-25

11. Collapsible spacer

12. Inner bearing (Fig. 4B-26)

- Remove the inner bearing using a separator and a press.
  Separator: J-37452

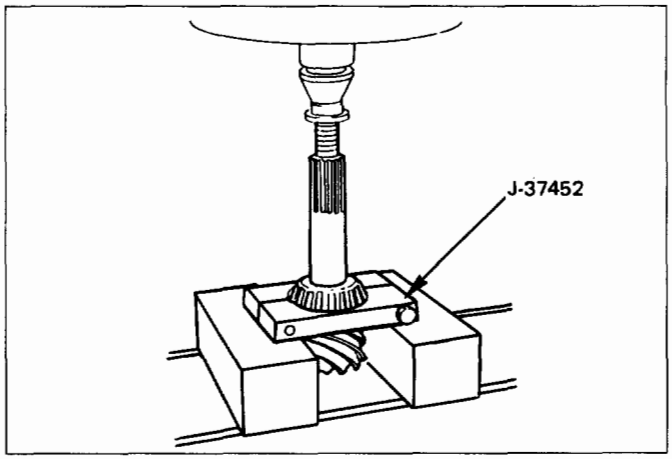

Fig. 4B-26

13. Adjust shim

14. Inner bearing outer race

15. Oil seal

16. Outer bearing

17. Outer bearing outer race

- Remove the inner bearing outer race and the outer bearing outer race by using a brass bar and a hammer (Fig. 4B-27, Fig. 4B-28).

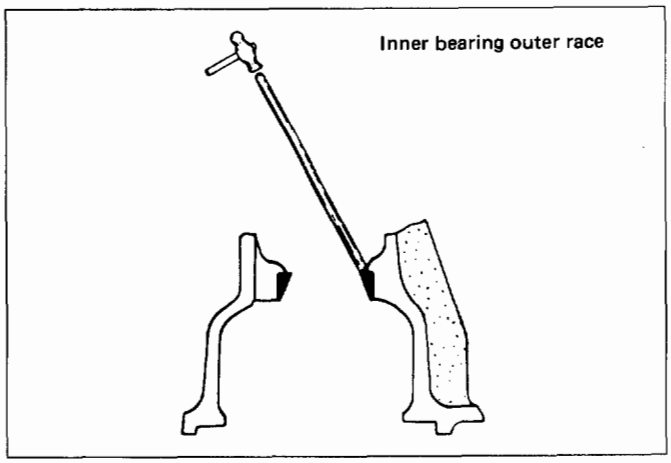

Fig. 4B-27

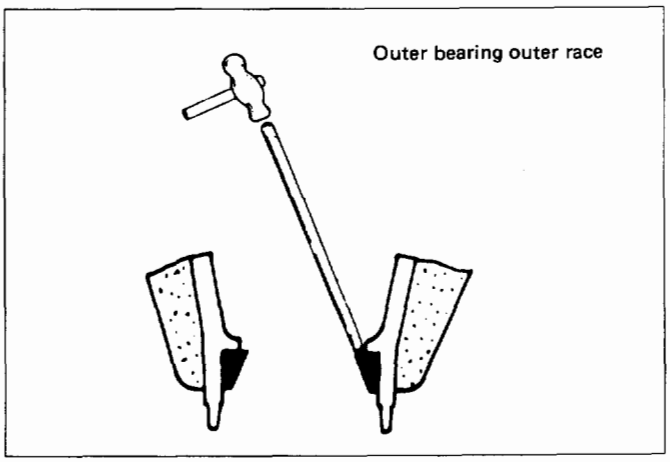

Fig. 4B-28

18. Differential carrier

REASSEMBLY

18. Differential carrier

17. Outer bearing outer race (Fig. 4B-29)

Installer: J-37262
Grip: J-8092

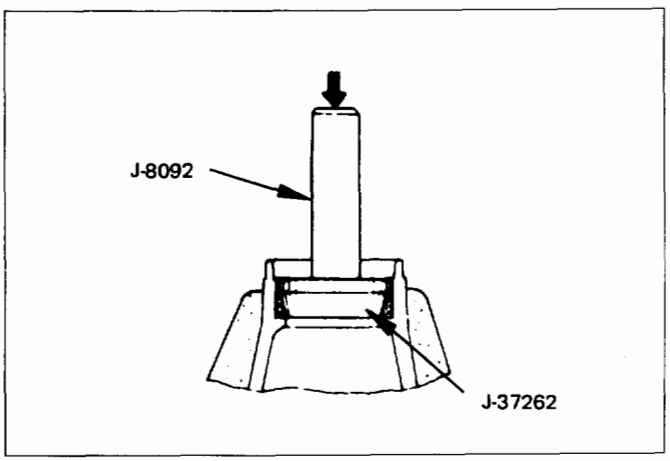

Fig. 4B-29

14. Inner bearing outer race (Fig. 4B-30)

Installer: J-37261
Grip: J-8092

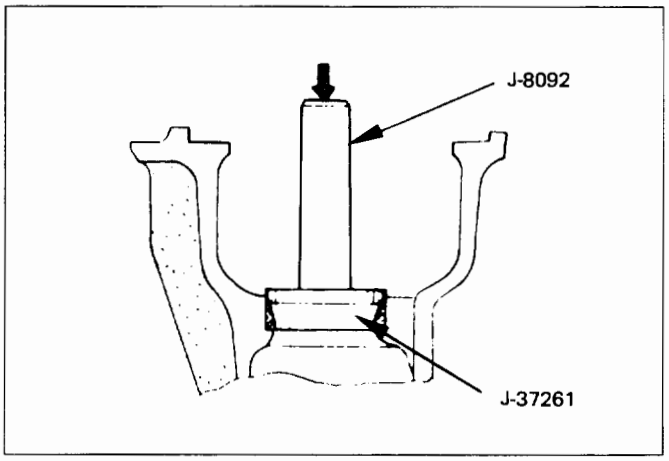

Fig. 4B-30

13. Adjust shim

- Adjustment of drive pinion mounting distance

1) Apply gear oil to the inner and outer drive pinion bearing.
   Clean the pinion setting gauge set.
   Then install the gauge set together with the inner and outer bearings (Fig. 4B-31).

① Front pilot : J-21777-42
② Stud and nut : J-21777-43
③ Rear pilot : J-23597-12
④ Gauge plate : J-23597-42

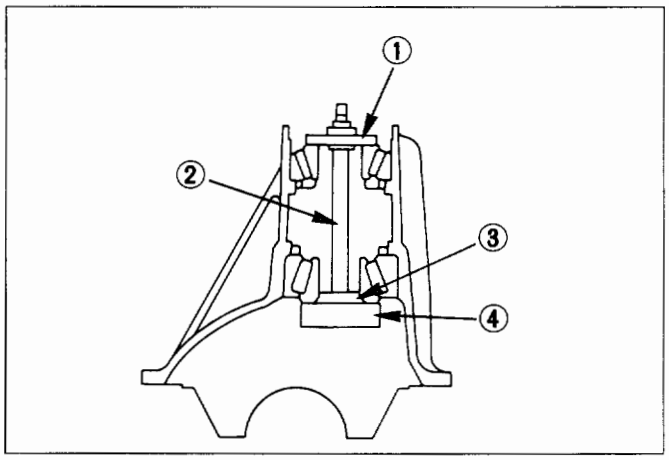

Fig. 4B-31

- Tighten the nut to the specified torque.

Torque N·m (lb·in)	New bearing	2.3 (20)
	Used bearing	1.1 (9.6)

2) Clean the side bearing bores. Install the dial indicator with the discs and arbor (Fig. 4B-32). Install and tighten the bearing caps to the specified torque.

Torque N·m (lb·ft)	108 (80)

① Dial indicator : J-8001
② Disc (2 pcs.) : J-21777-86
③ Arbor : J-23597-1
④ Gauge plate : J-23597-42

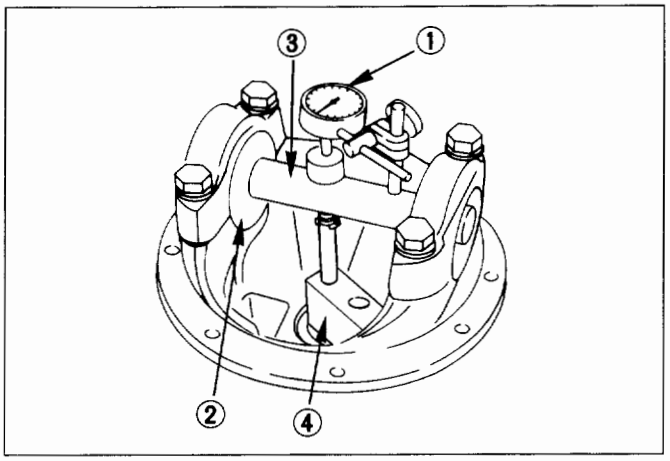

Fig. 4B-32

3) Set the dial indicator to "0". Place it on the mounting post of the gauging arbor with the contact button touching the indicator pad. Force the dial indicator downward until the needle has made a half turn clockwise. Tighten down the dial indicator in this position (Fig. 4B-33).

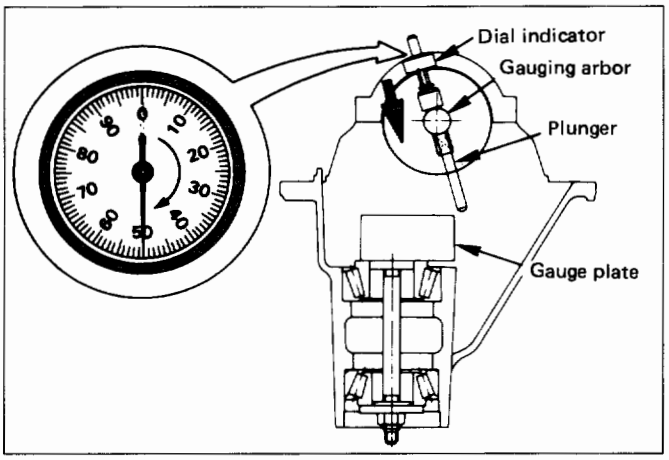

Fig. 4B-33

4) Position the plunger on the gauge plate. Move the gauging arbor slowly back and forth and locate the position at which the dial indicator shows the greatest defection. At this point, once again set the dial indicator to "0" (Fig. 4B-34).
   Repeat the procedure to verify the "0" setting.

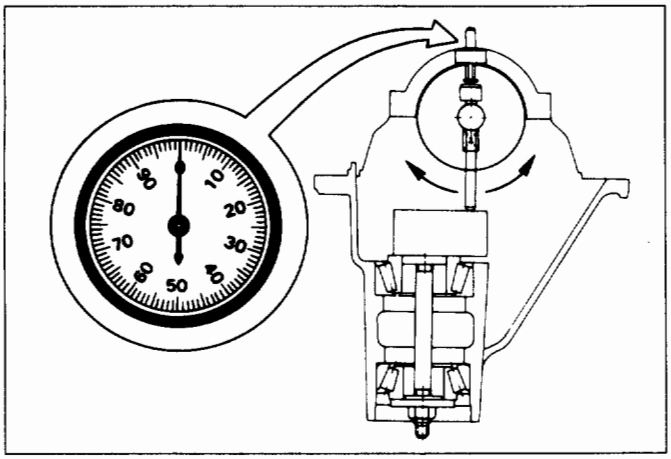

Fig. 4B-34

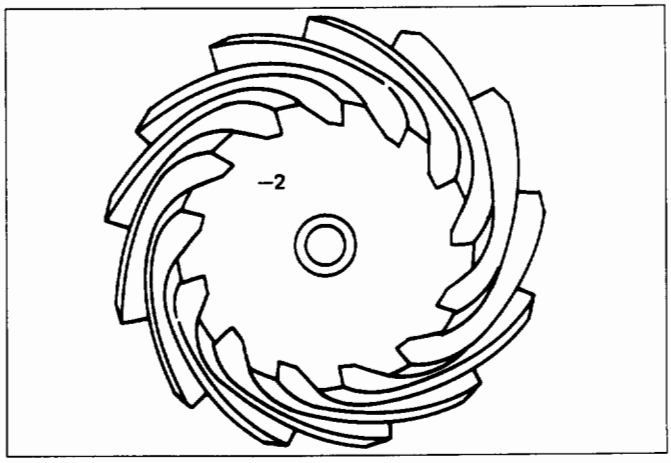

Fig. 4B-36

5) After the ZERO setting is obtained, rotate the gauging arbor until the dial indicator rod does not touch the gauging plate (Fig. 4B-35).
Record the number the dial indicator needle points to.

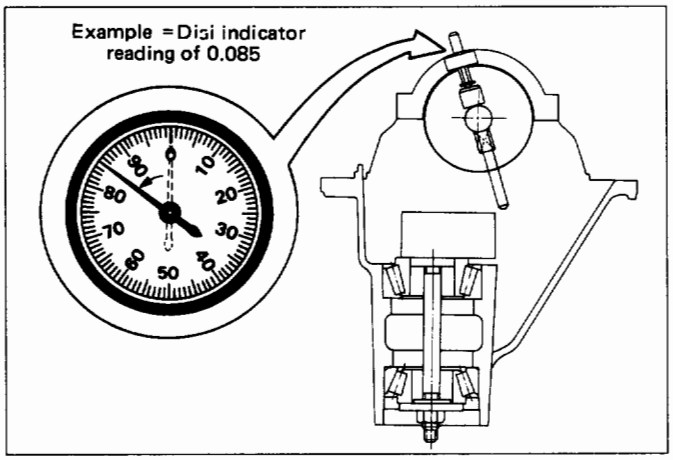

Fig. 4B-35

6) Record the pinion depth code on the head of the drive pinion (Fig. 4B-36).
The number indicates a necessary change in the pinion mounting distance. A plus number indicates the need for a greater mounting distance (which can be achieved by decreasing the shim thickness). A minus number indicates the need for a smaller mounting distance (which can be achieved by increasing the shim thickness). If examination reveals pinion depth code "0", the pinion is "nominal".

7) Select the shim using the chart;

Pinion marking / Dial indicator reading (Inches)	+10	+8	+6	+4	+2	0	−2	−4	−6	−8	−10
0.073										1.94(0.0764)	1.96(0.0772)
0.074									1.94(0.0764)	1.96(0.0772)	1.98(0.0779)
0.075								1.94(0.0764)	1.96(0.0772)	1.98(0.0779)	2.00(0.0787)
0.076						1.94(0.0764)	1.96(0.0772)	1.98(0.0779)	2.00(0.0787)	2.02(0.0795)	2.04(0.0803)
0.077						1.96(0.0772)	1.98(0.0779)	2.00(0.0787)	2.02(0.0795)	2.04(0.0803)	2.06(0.0811)
0.078				1.94(0.0764)	1.96(0.0772)	1.98(0.0779)	2.00(0.0787)	2.02(0.0795)	2.04(0.0803)	2.06(0.0811)	2.08(0.0819)
0.079			1.94(0.0764)	1.96(0.0772)	1.98(0.0779)	2.00(0.0787)	2.02(0.0795)	2.04(0.0803)	2.06(0.0811)	2.08(0.0819)	2.10(0.0827)
0.080	1.94(0.0764)	1.96(0.0772)	1.98(0.0779)	2.00(0.0787)	2.02(0.0795)	2.04(0.0803)	2.06(0.0811)	2.08(0.0819)	2.10(0.0827)	2.12(0.0835)	2.14(0.0842)
0.081	1.96(0.0772)	1.98(0.0779)	2.00(0.0787)	2.02(0.0795)	2.04(0.0803)	2.06(0.0811)	2.08(0.0819)	2.10(0.0827)	2.12(0.0835)	2.14(0.0842)	2.16(0.0850)
0.082	1.98(0.0779)	2.00(0.0787)	2.02(0.0795)	2.04(0.0803)	2.06(0.0811)	2.08(0.0819)	2.10(0.0827)	2.12(0.0835)	2.14(0.0842)	2.16(0.0850)	2.18(0.0858)
0.083	2.00(0.0787)	2.02(0.0795)	2.04(0.0803)	2.06(0.0811)	2.08(0.0819)	2.10(0.0827)	2.12(0.0835)	2.14(0.0842)	2.16(0.0850)	2.18(0.0858)	2.20(0.0866)
0.084	2.04(0.0803)	2.06(0.0811)	2.08(0.0819)	2.10(0.0827)	2.12(0.0835)	2.14(0.0842)	2.16(0.0850)	2.18(0.0858)	2.20(0.0866)	2.22(0.0874)	2.24(0.0882)
0.085	2.06(0.0811)	2.08(0.0819)	2.10(0.0827)	2.12(0.0835)	2.14(0.0842)	2.16(0.0850)	2.18(0.0858)	2.20(0.0866)	2.22(0.0874)	2.24(0.0882)	2.26(0.0890)
0.086	2.08(0.0819)	2.10(0.0827)	2.12(0.0835)	2.14(0.0842)	2.16(0.0850)	2.18(0.0858)	2.20(0.0866)	2.22(0.0874)	2.24(0.0882)	2.26(0.0890)	2.28(0.0898)
0.087	2.12(0.0835)	2.14(0.0842)	2.16(0.0850)	2.18(0.0858)	2.20(0.0866)	2.22(0.0874)	2.24(0.0882)	2.26(0.0890)	2.28(0.0898)	2.30(0.0906)	2.32(0.0913)
0.088	2.14(0.0842)	2.16(0.0850)	2.18(0.0858)	2.20(0.0866)	2.22(0.0874)	2.24(0.0882)	2.26(0.0890)	2.28(0.0898)	2.30(0.0906)	2.32(0.0913)	2.34(0.0921)
0.089	2.16(0.0850)	2.18(0.0858)	2.20(0.0866)	2.22(0.0874)	2.24(0.0882)	2.26(0.0890)	2.28(0.0898)	2.30(0.0906)	2.32(0.0913)	2.34(0.0921)	2.36(0.0929)
0.090	2.18(0.0858)	2.20(0.0866)	2.22(0.0874)	2.24(0.0882)	2.26(0.0890)	2.28(0.0898)	2.30(0.0906)	2.32(0.0913)	2.34(0.0921)	2.36(0.0929)	
0.091	2.22(0.0874)	2.24(0.0882)	2.26(0.0890)	2.28(0.0898)	2.30(0.0906)	2.32(0.0913)	2.34(0.0921)	2.36(0.0929)			
0.092	2.24(0.0882)	2.26(0.0890)	2.28(0.0898)	2.30(0.0906)	2.32(0.0913)	2.34(0.0921)	2.36(0.0929)				
0.093	2.26(0.0890)	2.28(0.0898)	2.30(0.0906)	2.32(0.0913)	2.34(0.0921)	2.36(0.0929)					
0.094	2.28(0.0898)	2.30(0.0906)	2.32(0.0913)	2.34(0.0921)	2.36(0.0929)						
0.095	2.32(0.0913)	2.34(0.0921)	2.36(0.0929)								
0.096	2.34(0.0921)	2.36(0.0929)									
0.097	2.36(0.0929)										

NOTE:
When ordering shims, find the part number in the parts catalog by using the thickness of shims listed in the above table.

12. Inner bearing

- Place the shim on the drive pinion, then install the inner bearing onto the pinion using an installer and a press (Fig. 4B-37).
  Installer: J-6133-01
  NOTE:
  - Do not apply pressure to the roller cage.
  - Apply pressure only to the inner race.

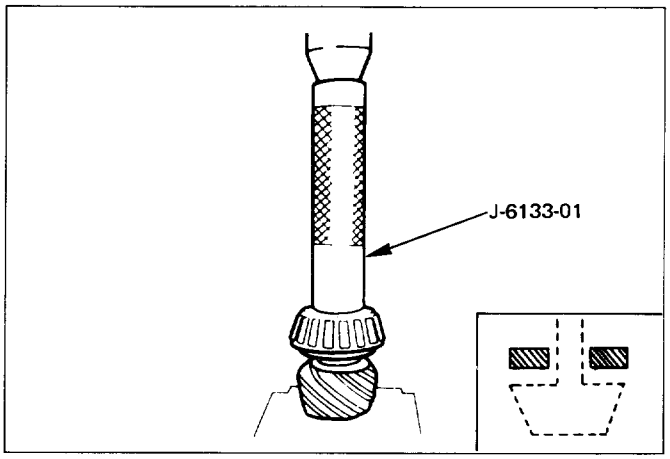

Fig. 4B-37

11. Collapsible spacer

- Discard the used collapsible spacer and install a new one.

10. Drive pinion shaft assembly

16. Outer bearing

15. Oil seal

- Use oil seal installer to install a new oil seal that has been soaked in rear axle lubricant (Fig. 4B- 38).
  Installer: J-37263

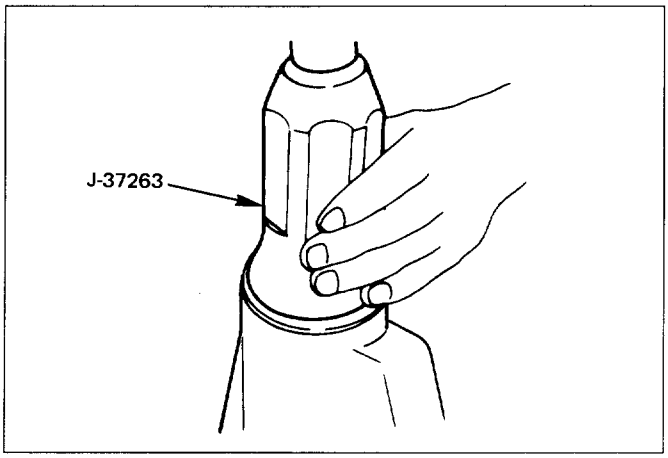

Fig. 4B-38

9. Dust cover

8. Flange assembly

7. Flange nut

1) Apply lubricant to the pinion threads.
2) Tighten the nut to the specified torque using the pinion flange holder (Fig. 4B-39).
   Pinion flange holder: J-37221

Torque N·m (lb·ft)	New bearing	245-294 (181-217)
	Used bearing	127-147 (94-108)

NOTE:
- Discard used flange nut and install new one.
- Do not over tighten the flange nut.

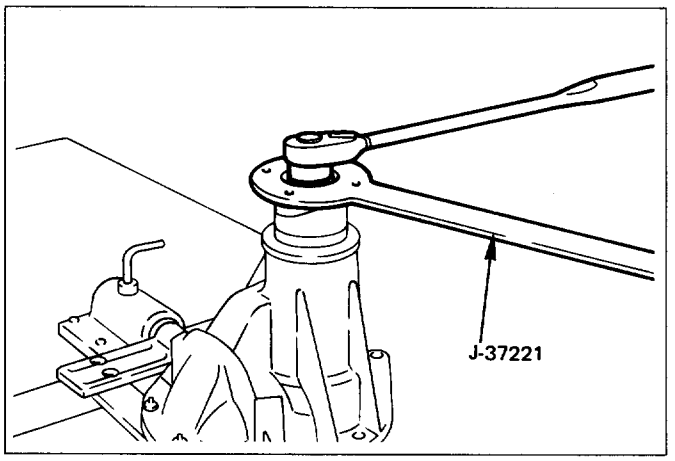

Fig. 4B-39

3) Pinion bearing preload
   (a) Measure the bearing preload by using a torque meter.
   Note the scale reading required to rotate the flange.
   (b) Continue tightening flange nut until the specified starting torque is obtained (Fig. 4B-40).

Starting torque N·m (lb·in)	New bearing	0.7-1.3 (6.08-11.28)
	Used bearing	0.4-0.6 (3.04-5.64)

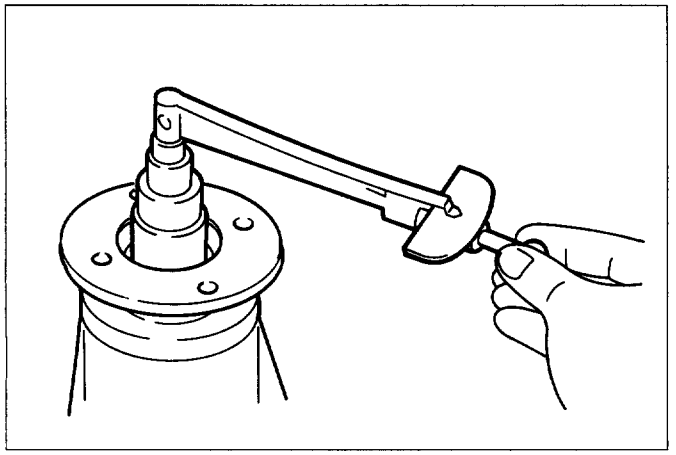

Fig. 4B-40

Using special tool, stake the flange nut at two points (Fig. 4B-41).
Punch: J-39209

NOTE:
- When staking, be sure to turn the nut to insure that there is no change in bearing preload.
- Make sure of preload again as instructed in 3).

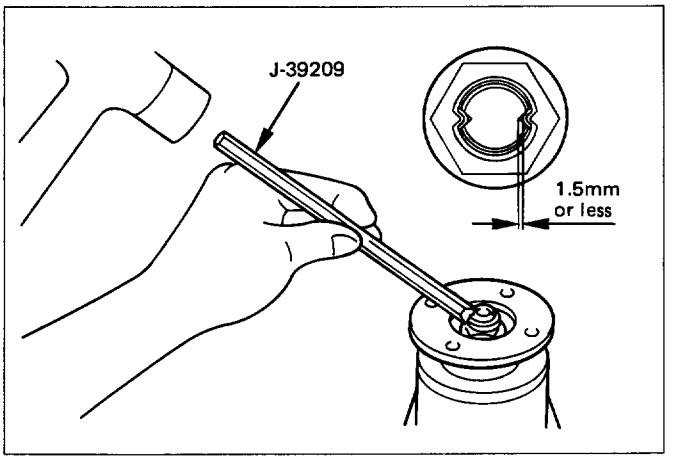

Fig. 4B-41

6. Adjust shim

1) Attach the side bearing to the differential assembly without shims. Support the opposite side using a pilot to prevent bearing damage (Fig. 4B-42).
   ① Installer: J-37257
   ② Drive handle: J-8092
   ③ Pilot: J-8107-4

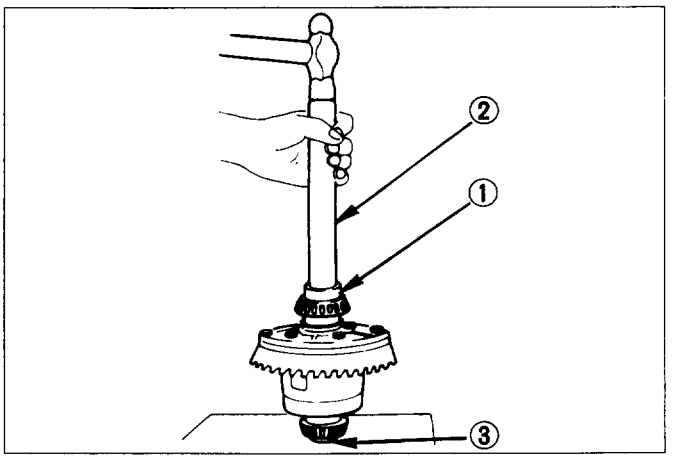

Fig. 4B-42

2) Insert the differential cage assembly with bearing outer races into the side bearing bores of the carrier (Fig. 4B-43).

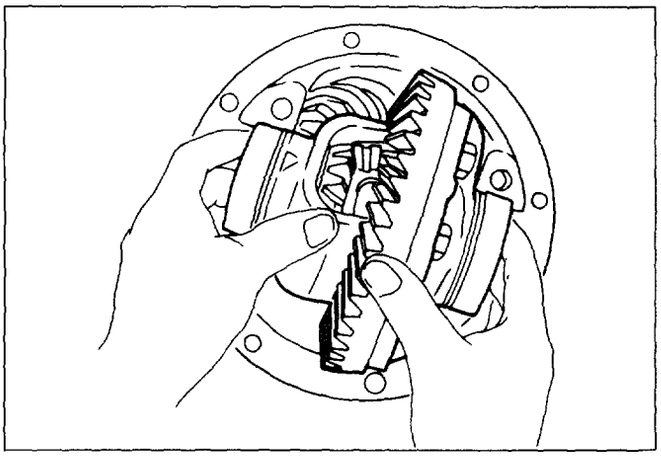

Fig. 4B-43

3) Using two sets of feeler gauges, insert a feeler stock of sufficient thickness between each bearing outer race and the carrier to remove all end play. Make certain the feeler stock is pushed to the bottom of the bearing bores. Mount the dial indicator on the carrier so that the indicator stem is at right angles to a tooth on the ring gear (Fig. 4B-44).
Dial indicator: J-8001

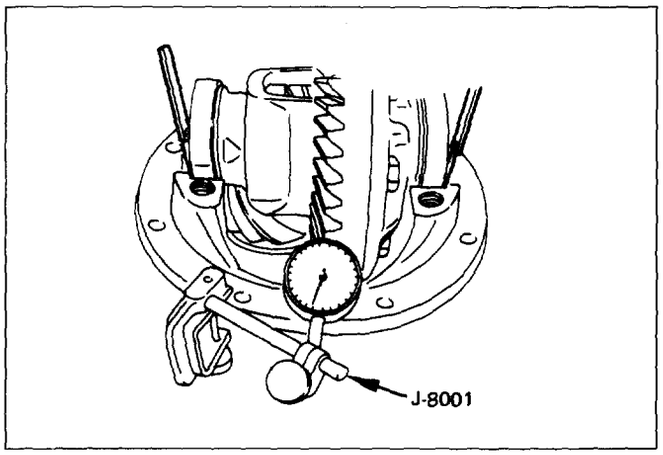

Fig. 4B-44

4) Adjust feeler gauge thickness from side to side until ring gear backlash is in the specified range (Fig. 4B-45).

Backlash mm (in)	0.15 - 0.2 (0.006 - 0.008)

With zero end play and correct backlash established, remove the feeler gauge packs, determine the thickness of the shims required and add 0.05 mm (0.002 in) to each shim pack to provide side bearing preload. Always use new shims.

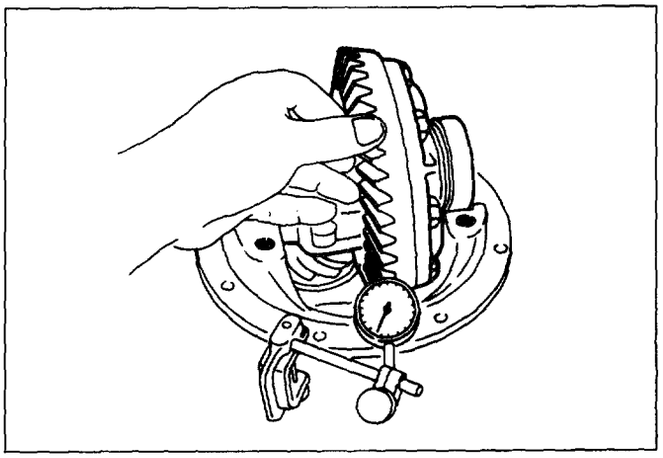

Fig. 4B-45

5) Remove side bearing (Fig. 4B-46).
Remover: J-22888
Pilot: J-8107-4

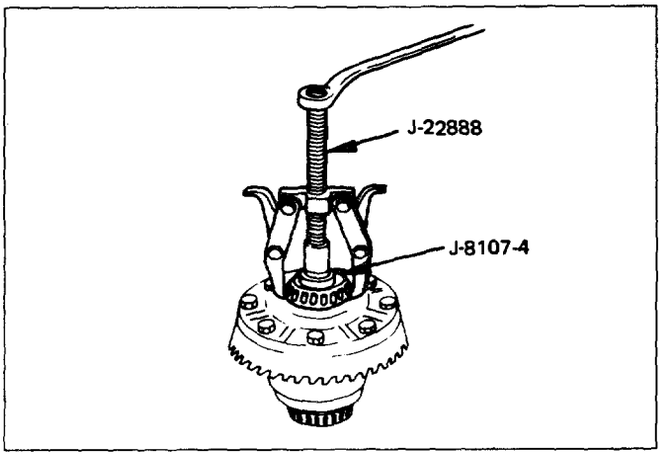

Fig. 4B-46

5. Side bearing

- Install the side bearings together with the selected shims (Fig. 4B-47).
  - ① Installer: J-37257
  - ② Drive handle: J-8092
  - ③ Pilot: J-8107-4

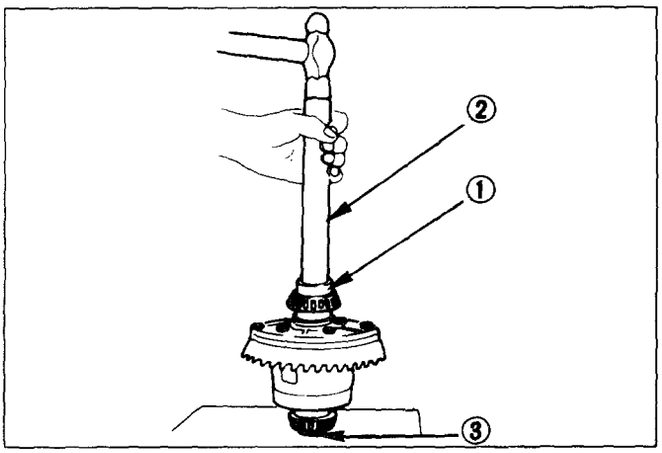

Fig. 4B-47

4. **Side bearing outer race**
3. **Differential cage assembly**
2. **Bearing cap**

- Align the setting marks applied at disassembly (Fig. 4B-48).

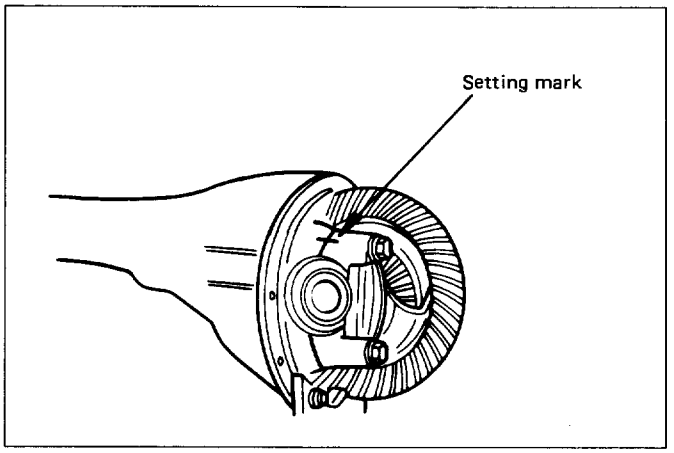

Fig. 4B-48

1. **Bolt (Fig. 4B-49)**
   - Tighten the bolt to the specified torque.

Torque N·m (lb·ft)	108 (80)

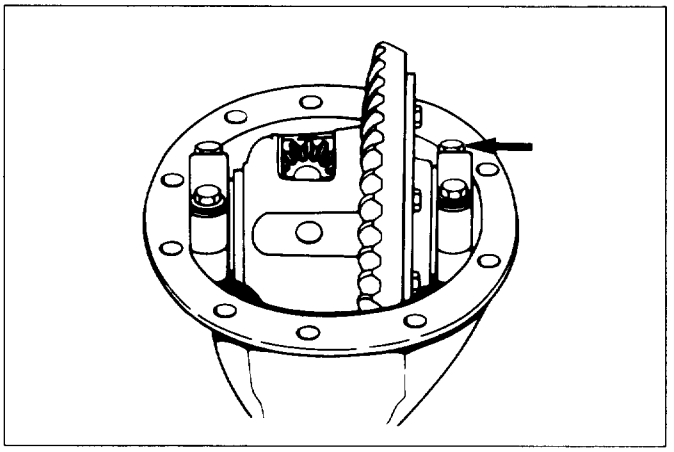

Fig. 4B-49

- Measure the amount of run-out of the ring gear at its rear face (Fig. 4B-50).

mm (in)

Standard	Limit
0.02 (0.001)	0.05 (0.002)

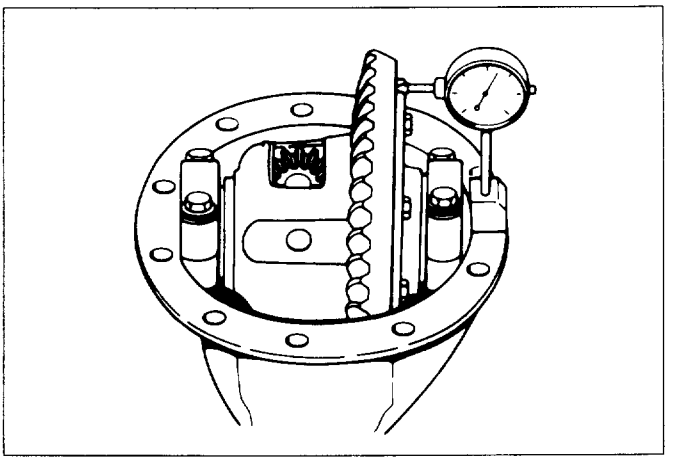

Fig. 4B-50

Gear Tooth Contact Pattern Check and Adjustment

- Apply a thin coat of Prussian blue or equivalent to the faces of the 7-8 teeth of the ring gear. Check the impression of contact on the ring gear teeth and make necessary adjustment as described in Fig. 4B-51 if the contact is abnormal (Fig. 4B-51, Fig. 4B-52).

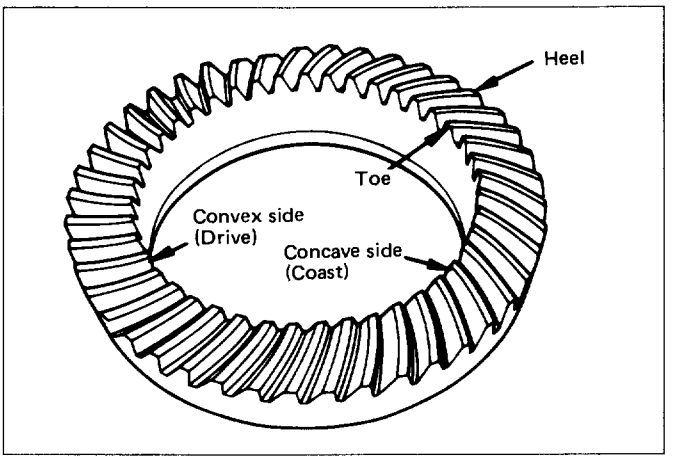

Fig. 4B-51

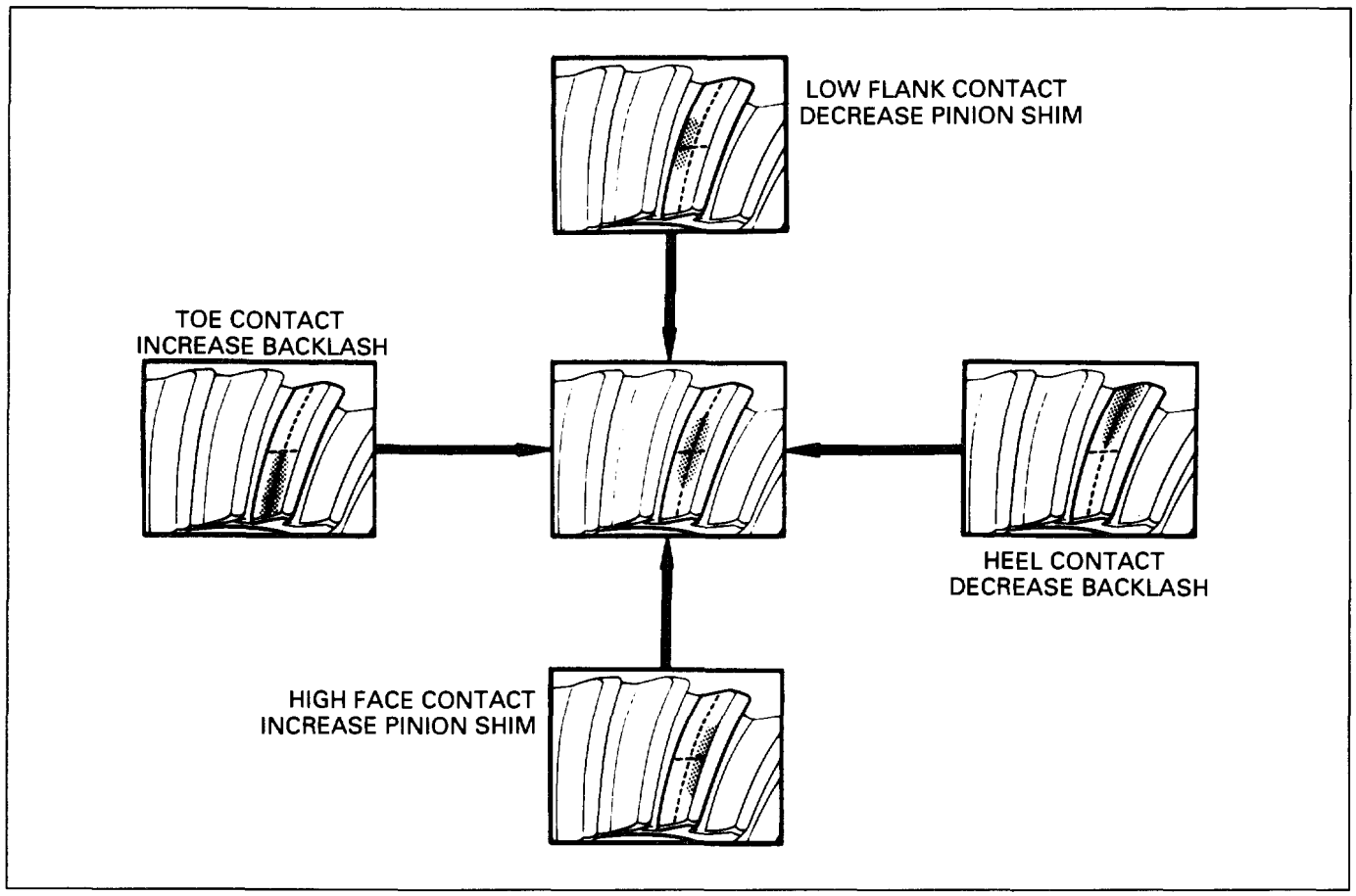
LOW FLANK CONTACT
DECREASE PINION SHIM
TOE CONTACT
INCREASE BACKLASH
HEEL CONTACT
DECREASE BACKLASH
HIGH FACE CONTACT
INCREASE PINION SHIM

Fig. 4B-52

DIFFERENTIAL CAGE ASSEMBLY

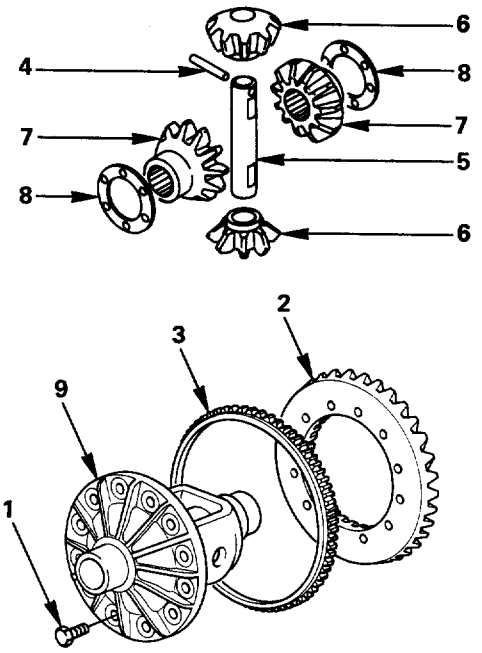

Disassembly steps

1. Bolt
2. Ring gear
3. Exciter ring (If equipped with rear wheel antilock)
4. Lock pin
5. Cross pin
6. Pinion gear
7. Side gear
8. Thrust washer
9. Differential cage

Reassembly steps

To reassemble, follow the disassembly steps in the reverse order.

Fig. 4B-53

DISASSEMBLY

1. **Bolt**
2. **Ring gear**
3. **Exciter ring (If equipped with rear wheel antilock)**
   - Remove exciter ring from the differential cage using a mallet or a copper hammer (Fig. 4B-54).

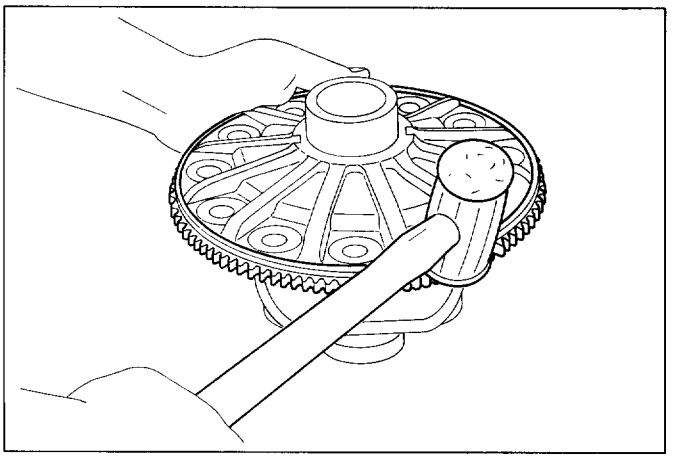

Fig. 4B-54

4. **Lock pin**
   - Break staking on the lock pin, using a 5 mm (0.20 in) diameter drill (Fig. 4B-55).

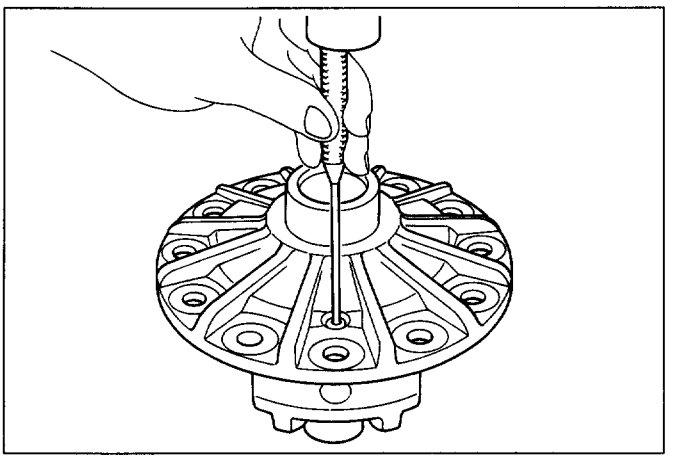

Fig. 4B-55

5. **Cross pin**
   - Remove the cross pin, using a soft metal rod and a hammer (Fig. 4B-56).

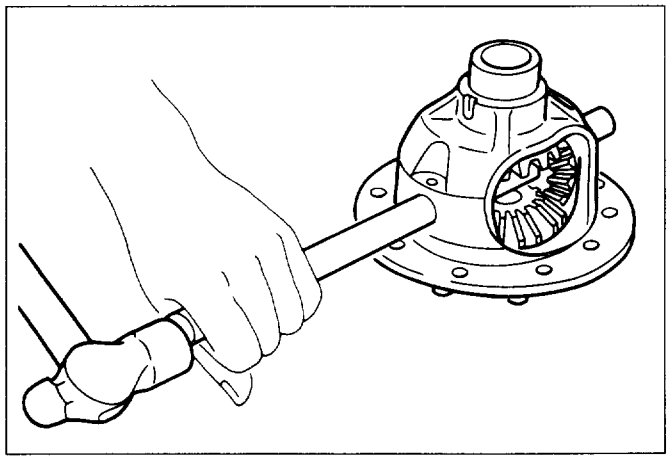

Fig. 4B-56

6. **Pinion gear**
7. **Side gear**
8. **Thrust washer**
9. **Differential cage**

INSPECTION AND REPAIR

Make necessary correction or parts replacement if wear, damage, corrosion or any other abnormal condition are found through inspection.
Check the following parts.

- Ring gear, pinion gear
- Bearing
- Side gear, pinion gear, cross pin
- Differential cage, carrier
- Thrust washer
- Oil seal

Ring gear replacement

1) The ring gear should always be replaced with the drive pinion as a set.
2) Clean the ring gear threaded holes to remove the locking agent.
3) When installing the ring gear, apply LOCTITE 271 or equivalent to all the threaded area and half of the unthreaded area of the bolt.
4) Discard used bolts and install new ones.

Torque N·m (lb·ft)	108 (80)

5) Tighten the fixing bolts in a diagonal sequence as illustrated (Fig. 4B-57).

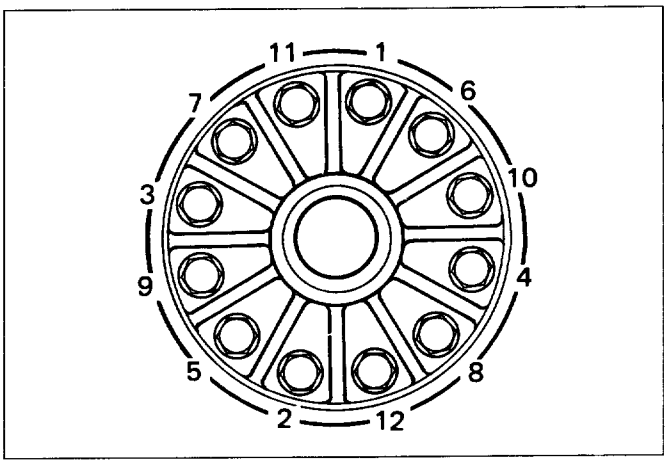

Fig. 4B-57

Clearance between the differential pinion and the cross pin measurement (Fig. 4B-58).

mm (in)

Standard	Limit
0.06 - 0.12 (0.002 - 0.005)	0.2 (0.008)

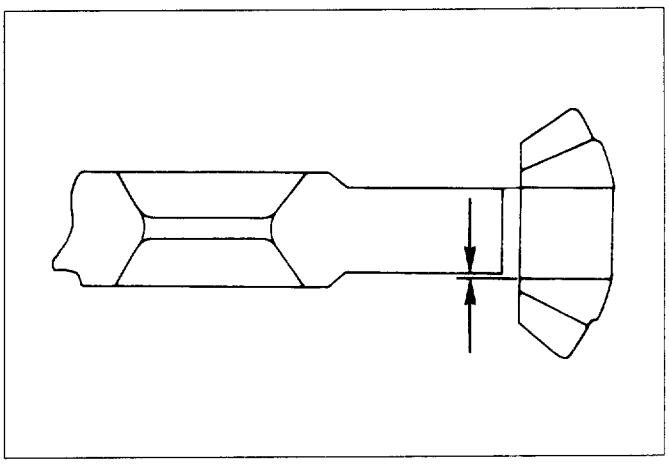

Fig. 4B-58

Clearance between the side gear and the differential box (Fig. 4B-59)

mm (in)

Standard	Limit
0.05 - 0.12 (0.002 - 0.0043)	0.15 (0.006)

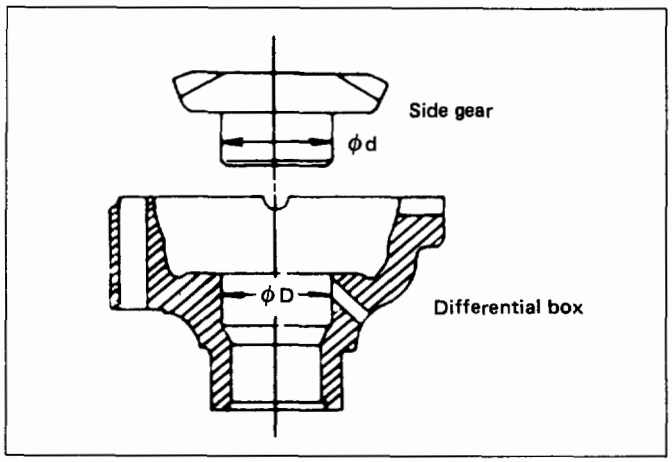

Fig. 4B-59

Play in splines between the side gear and the axle shaft (Fig. 4B-60)

mm (in)

Standard	Limit
0.07 - 0.38 (0.003 - 0.014)	0.5(0.02)

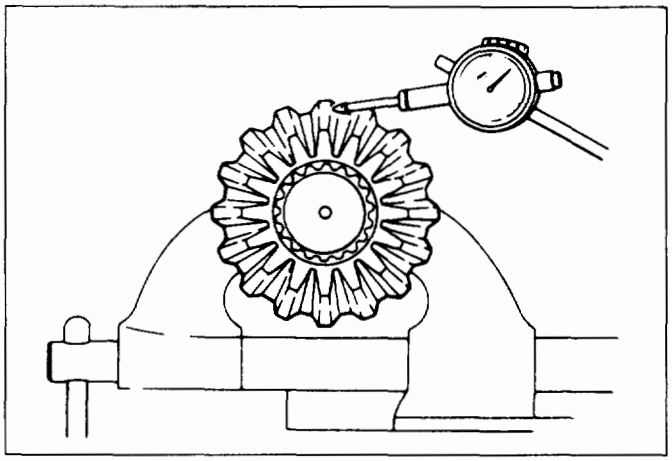

Fig. 4B-60

REASSEMBLY

9. **Differential cage**
8. **Thrust washer**
7. **Side gear**
6. **Pinion gear**
   - Install the pinion gear by engaging it with the side gears while turning both pinion gears simultaneously in the same direction (Fig. 4B-61).

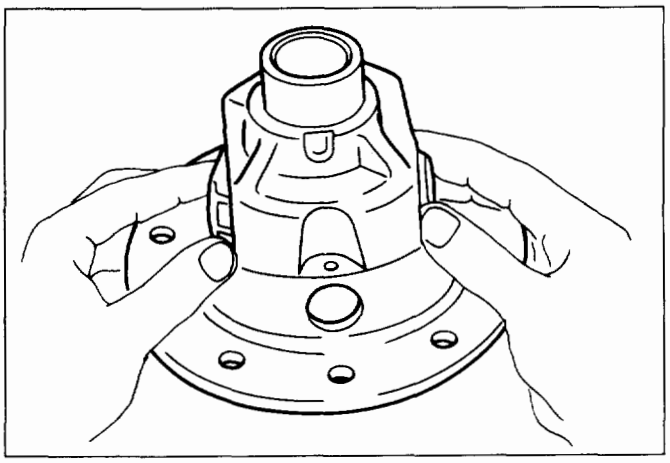

Fig. 4B-61

5. **Cross pin**
   1) Be sure to install the cross pin so that it is in alignment with the lock pin hole in the differential cage (Fig. 4B-62).

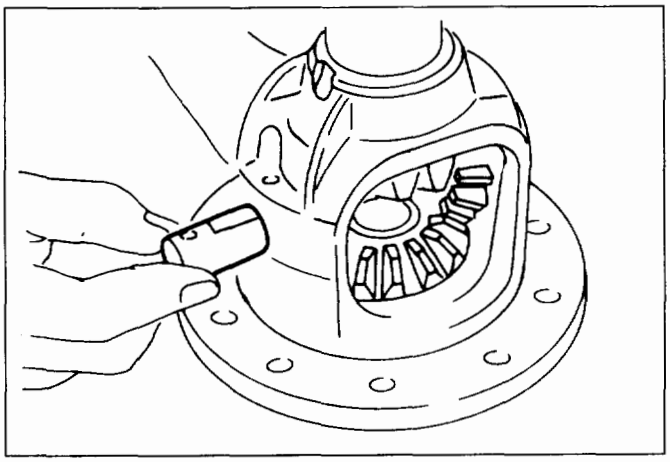

Fig. 4B-62

2) Adjust the backlash between the side gear and the pinion gear (Fig. 4B-63).

Backlash mm (in)	0.13-0.18 (0.005-0.007)

Thickness of thrust washers available mm (in)

mm	0.80	0.90	1.00	1.10	1.20	1.30
in	0.031	0.035	0.039	0.043	0.047	0.051

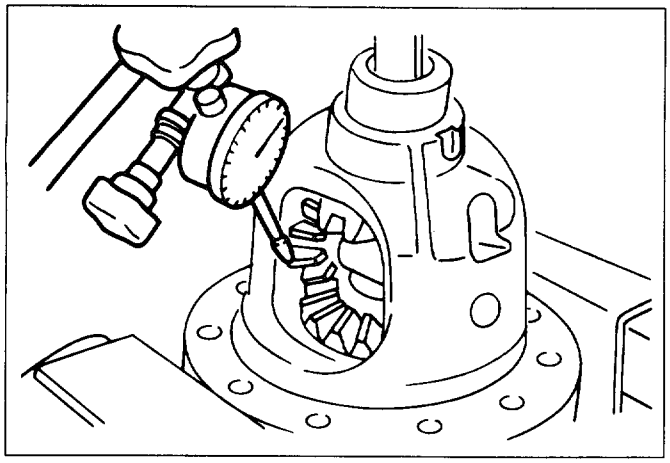

Fig. 4B-63

4. **Lock pin**
   - After lock pin installation, stake the cage to secure the lock pin (Fig. 4B-64).

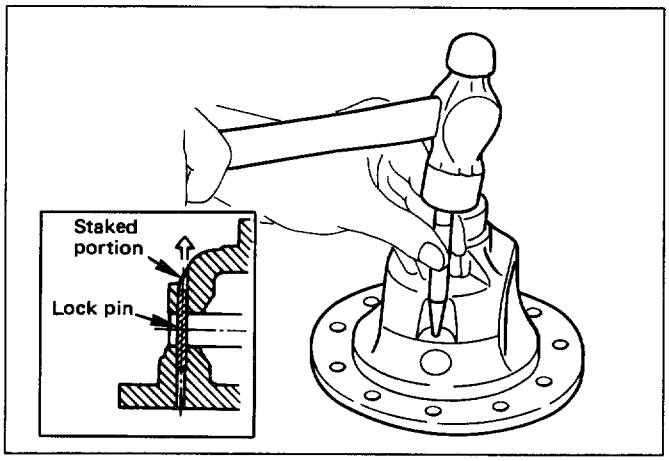

Fig. 4B-64

3. **Exciter ring (If equipped with rear wheel antilock)**
   - Press the exciter ring on the differential cage using the ring gear as a pilot (Fig. 4B-65).

   NOTE:
   Discard used exciter ring and install new one.

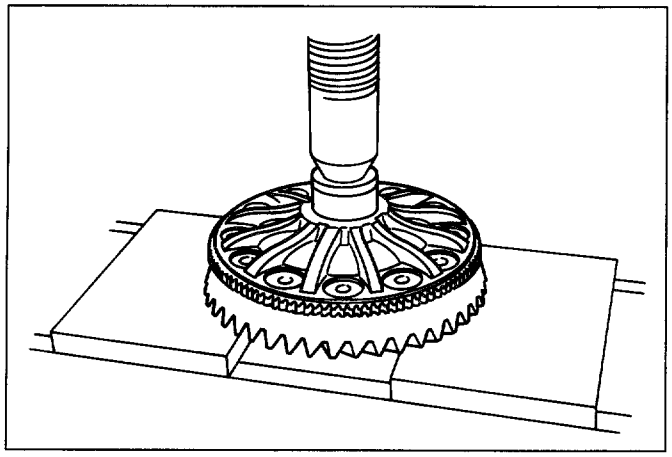

Fig. 4B-65

2. **Ring gear**
   - Clean the ring gear threaded holes to remove the locking agent.
   - When installing the ring gear, apply LOCTITE 271 or equivalent to all the threaded area and half of the unthreaded area of the bolt.

1. **Bolt**
   - Tighten the bolts in diagonal sequence as illustrated (Fig. 4B-66).

Torque N·m (lb·ft)	108 (80)

NOTE:
Discard used bolts and install new ones.

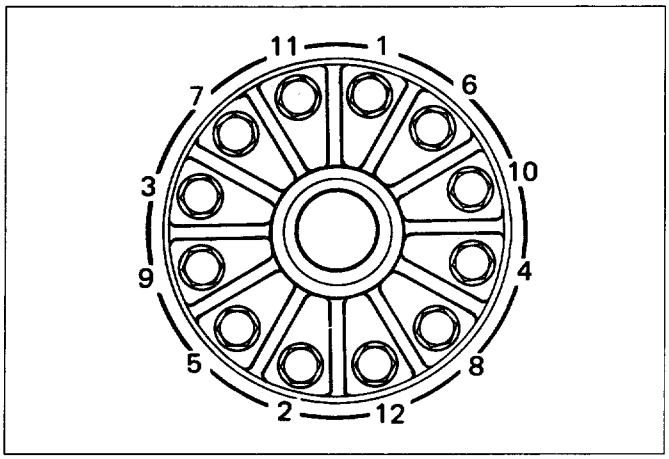

Fig. 4B-66

LIMITED SLIP DIFFERENTIAL

For ring size 220ϕ

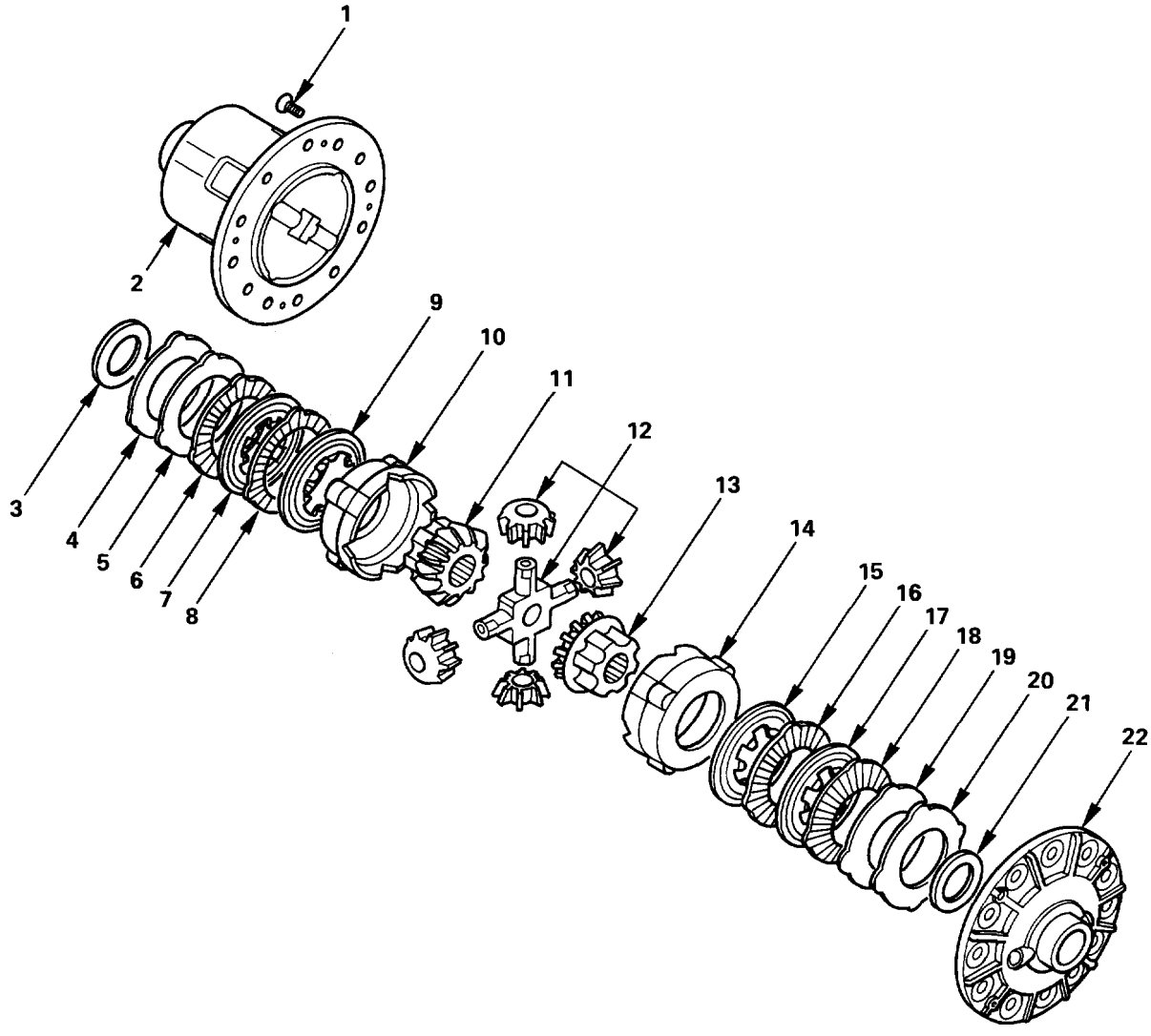

Disassembly steps

1. Screw
2. Differential cage A
3. Thrust washer
4. Spring disc
5. Spring disc
6. Friction plate
7. Friction disc
8. Friction plate
9. Friction disc
10. Pressure ring
11. Side gear
12. Pinion and pinion shaft
13. Side gear
14. Pressure ring
15. Friction disc
16. Friction plate
17. Friction disc
18. Friction plate
19. Spring disc
20. Spring disc
21. Thrust washer
22. Differential cage B

Reassembly steps

To reassemble, follow the disassembly steps in the reverse order.

Fig. 4B-67

DISASSEMBLY

Using special tool, grip it with a vice, and set the differential (Fig. 4B-68).

Side gear holder: J-41033

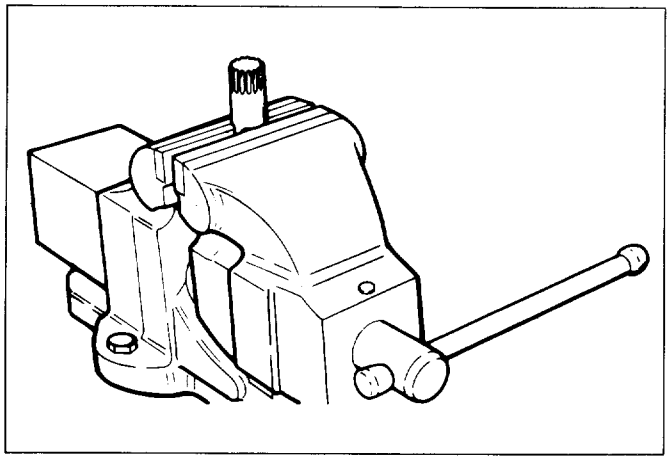

Fig. 4B-68

1. **Screw**
   - Gradually and evenly loosen the 4 fixing screws of the differential cages A and B (Fig. 4B-69).

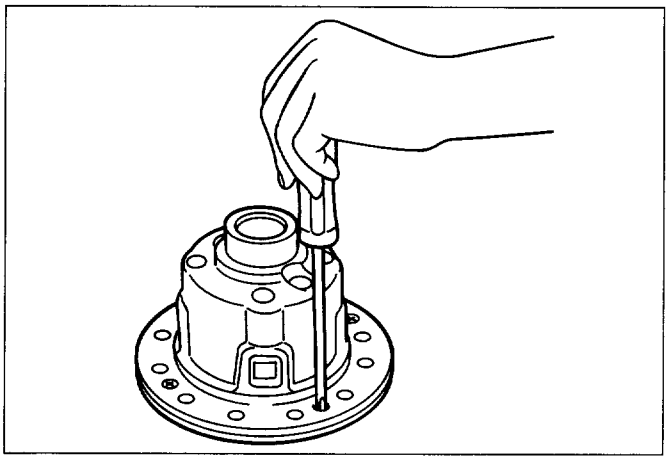

Fig. 4B-69

2. **Differential cage A**
3. **Thrust washer**
4. **Spring disc**
   - When removing the spring disc, friction disc, and friction plate, place them in order for clear distinction of left and right use.
5. **Spring disc**
6. **Friction plate**
7. **Friction disc**
8. **Friction plate**
9. **Friction disc**
10. **Pressure ring**
11. **Side gear**
12. **Pinion and pinion shaft**
13. **Side gear**
14. **Pressure ring**
15. **Friction disc**
16. **Friction plate**
17. **Friction disc**
18. **Friction plate**
19. **Spring disc**
20. **Spring disc**
21. **Thrust washer**
22. **Differential cage B**

INSPECTION AND REPAIR

Make necessary correction or parts replacement if wear, damage, corrosion or any other abnormal condition is found through inspection.

Visual check

Check the following parts for wear, damage, noise or any other abnormal conditions.

- **Friction disc, friction plate and spring disc**
  - ① Sliding surfaces
  - ② Projections

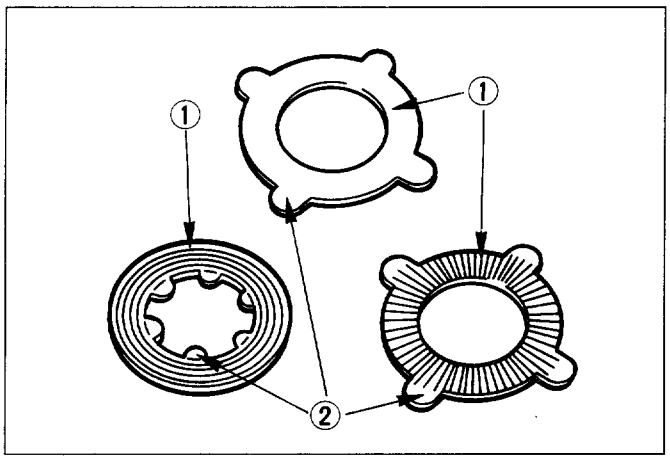

Fig. 4B-70

- **Pressure ring**
  - ③ Sliding surface with the friction disc
    When nicks or scratches are found, polish with an oil stone and repair on a level block using a compound.
  - ④ Sliding spherical surface with the pinion gear
  - ⑤ Sliding surface with the side gear
  - ⑥ V-shaped groove of the pressure ring and V-shaped section of the pinion shaft
  - ⑦ Fitting section with the case
  - ⑧ Face contacting the inner surface of the differential case
    Repair burrs and nicks using an oil stone.

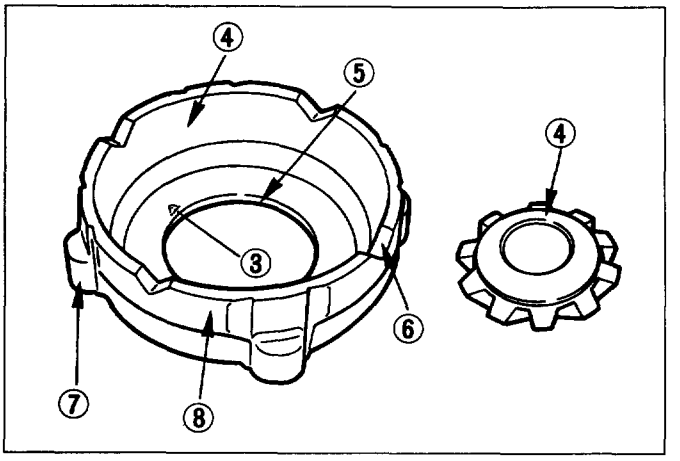

Fig. 4B-71

- **Thrust washer**
  - ⑨ Sliding surface with the side gear or case
  - ⑩ Peripheral groove of the side gear
    Repair light nicks and burrs using an oil stone.

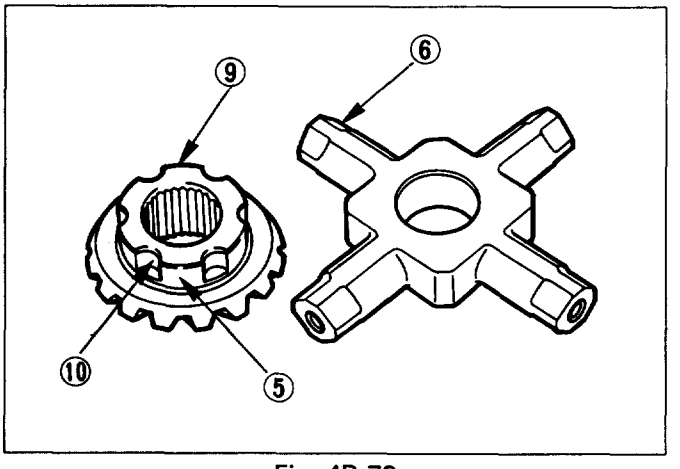

Fig. 4B-72

- **Case**
  - ⑪ Contact surface with the spring disc
  - ⑫ Inner groove of the differential cage B
    Repair light nicks and burrs using an oil stone.

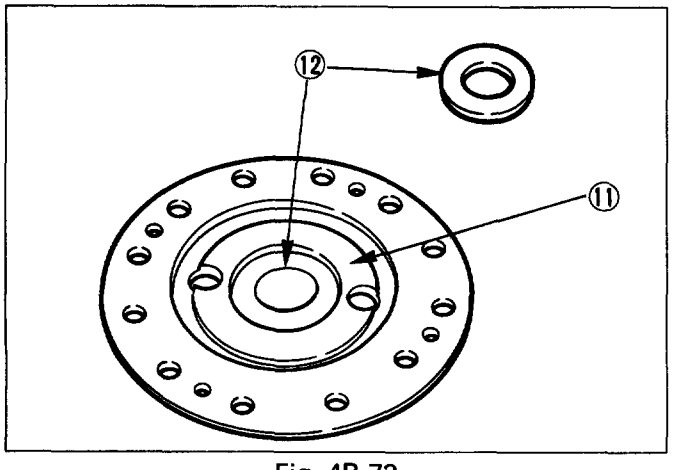

Fig. 4B-73

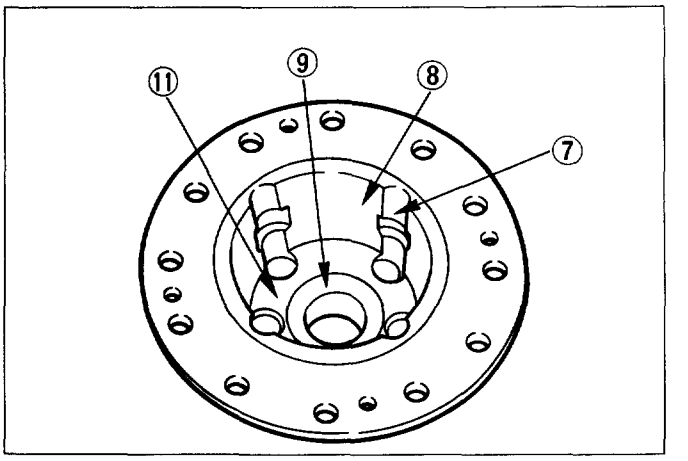

Fig. 4B-74

Deformation of the friction disc & plate (Fig. 4B-75)

Limit	mm (in)	0.08 (0.003)

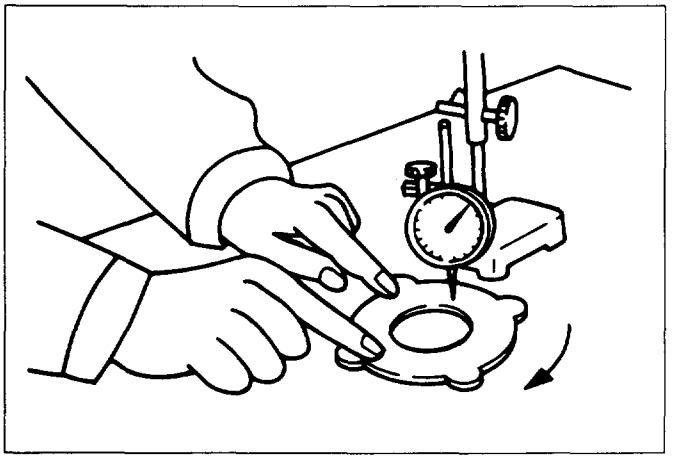

Fig. 4B-75

Wear of the friction plate & disc (Fig. 4B-76)

Limit (A - B)	mm (in)	0.1 (0.004)

Remarks: A=Inner or outer projections
B=Sliding surface subjected to abrasion

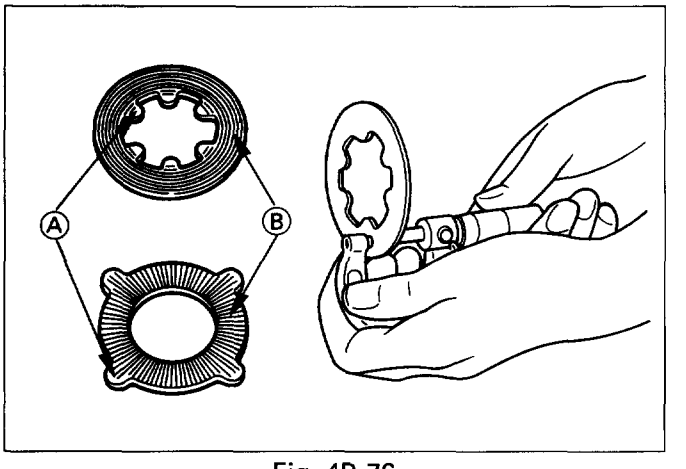

Fig. 4B-76

Wear of the thrust washer (Fig. 4B-77)

Limit mm (in)	1.3 (0.05)

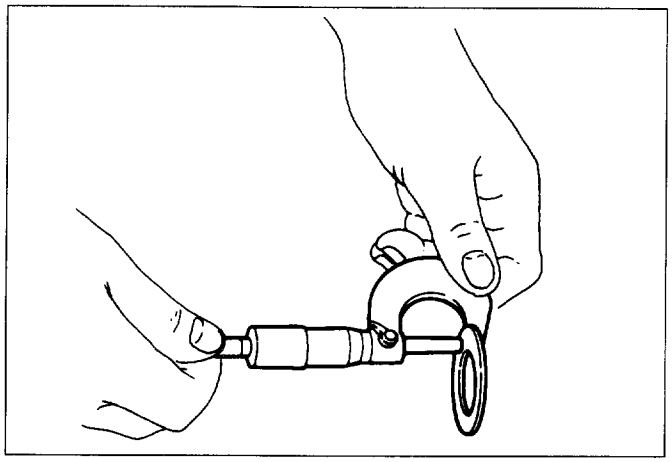

Fig. 4B-77

REASSEMBLY

Adjustment of clearance between the friction disc and plate

1) Measuring the depth of the differential cage (Fig. 4B-78).

mm (in)

Standard (A -B)	80.58 (3.17)
(C)	10.58 (0.41)

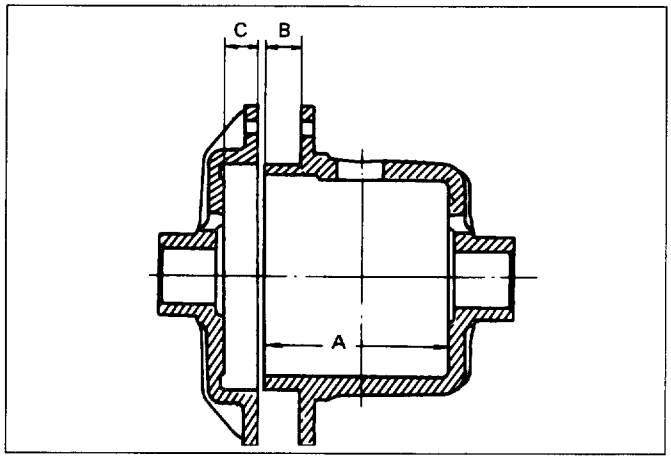

Fig. 4B-78

2) Measuring the overall length of the pressure ring, friction disc and friction plate (Fig. 4B-79).
   - Mount the pinion shaft in the pressure ring and then install the friction disc & plate.
   - Measure the length between the plates over the V-groove. (D)

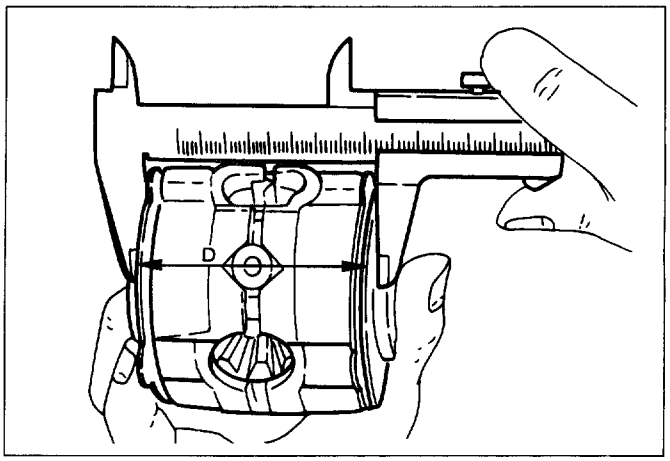

Fig. 4B-79

3) After measuring dimensions A, B, C and D, make adjustment in the following manner:
   - Measure the thickness (E) of the spring disc.
     1.75mm (0.069in) x 4 discs
4) Select the friction disc & plate so as to satisfy the following equation:
   {(A-B)+C} - (D+E) = 0.06 - 0.20mm
   (0.002-0.008 in)
   Also, the total size difference of the friction disc & plate and spring disc should be 0.05mm (0.02in) or less.

Thickness mm (in)	1.75 - 1.85 (0.069 - 0.073)

Backlash adjustment of the side gear in the direction of the shaft

1) Measuring the depth of the differential cage (Fig. 4B-80).

mm (in)

(F-B)	82.03 (3.23)
(G)	12.03 (0.47)

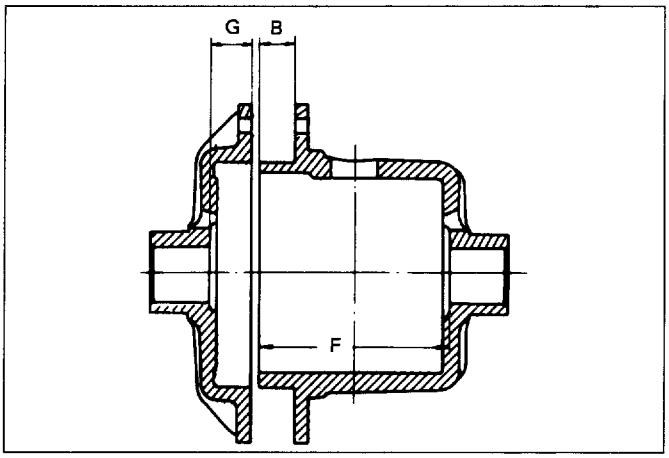

Fig. 4B-80

2) Measuring the dimension between the thrust washers at both ends (Fig. 4B-81).
   - Assemble the side gear, pinion, pinion shaft, pressure ring and thrust washer, and pressing the pressure ring to the pinion shaft in the direction of the shaft to make the clearance 0.
   - Have the side gear contact to the pinion to make the backlash 0.
   - Measure the dimension (H) between thrust washers at both ends.

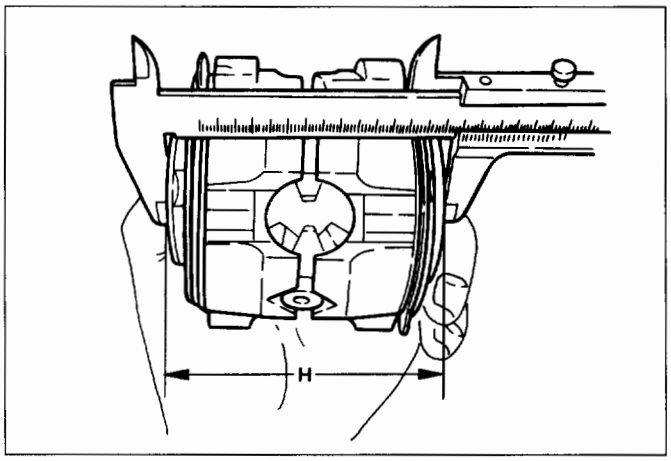

Fig. 4B-81

3) After measuring dimensions of each of the above sections, proceed with the adjustment in the following manner:
   Adjust the clearance to satisfy the equation below.
   $\{(F - B) + G - H\} = 0.05 - 0.20$ mm
   Also, select the thrust washers so that the dimensional difference between the back surfaces of the left and right pressure rings to the thrust washers is 0.05mm or less.

Thickness	mm (in)	1.5, 1.6, 1.7 (0.059, 0.063, 0.067)

NOTE:
When assembling the parts, apply recommended gear oil sufficiently to each of the parts, especially, to the contact surfaces and sliding surfaces.
Recommended oil: Besco Gear Oil LSD

22. Differential cage B
21. Thrust washer
20. Spring disc
- When assembling the spring disc, make sure the mounting direction is correct as shown in Fig. 4B-82.

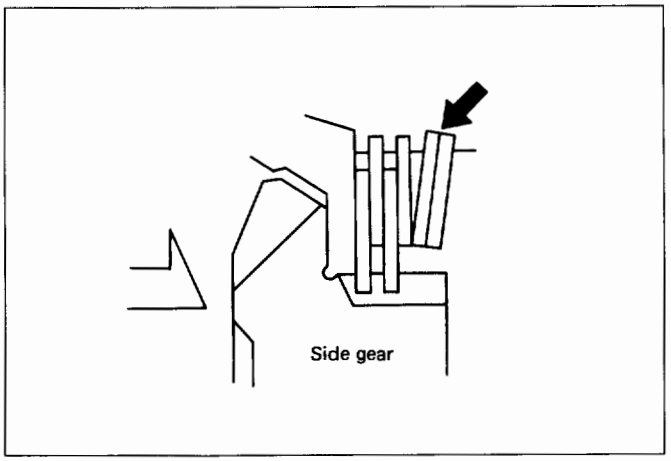

Fig. 4B-82

19. Spring disc
18. Friction plate
17. Friction disc
16. Friction plate
15. Friction disc
14. Pressure ring
13. Side gear
12. Pinion and pinion shaft
11. Side gear
10. Pressure ring
9. Friction disc
8. Friction plate
7. Friction disc
6. Friction plate
5. Spring disc
- The spring disc should be assembled as shown in Fig. 4B-82.

4. Spring disc
3. Thrust washer
2. Differential cage A
1. Screw (Fig. 4B-83)
- Matching the guide marks of the differential cages A and B, tighten the screws evenly in the diagonal order.

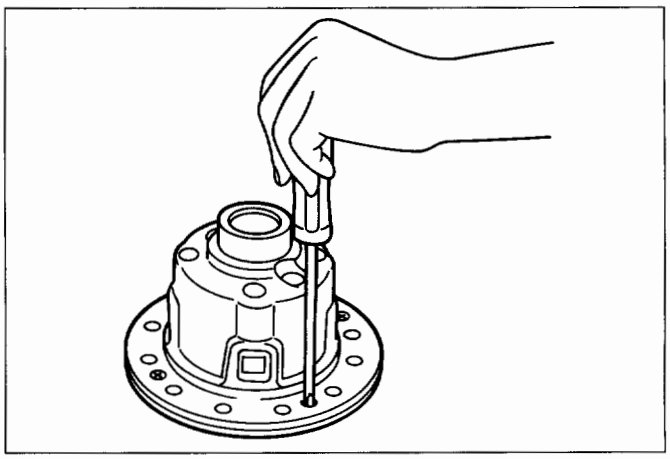

Fig. 4B-83

Checking the operation

- Measure the starting torque using the side gear holder. (Fig. 4B-84).

Starting torque	N·m (lb·ft)	64 - 98 (47 - 72)

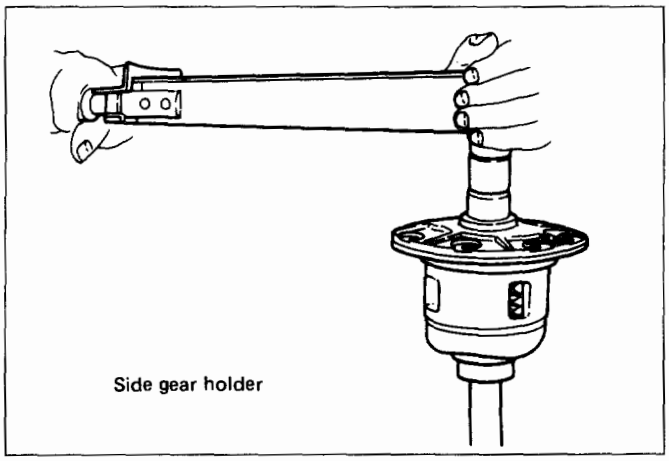

Fig. 4B-84

MAIN DATA AND SPECIFICATIONS

GENERAL SPECIFICATIONS

Rear axle		
Type		Banjo, Semi-floating
Size	mm (in)	220 (8.66)
Gear type		Hypoid
Gear ratio	(to 1)	4.555
Differential type		Two pinion
Lubricant		
Grade		GL-5: (Standard differential) GL-5, LSD: (Limited slip differential)
Capacity	liter (US gal)	1.8 (0.48)

TORQUE SPECIFICATIONS

REAR AXLE AND DIFFERENTIAL

N·m (lb·ft)

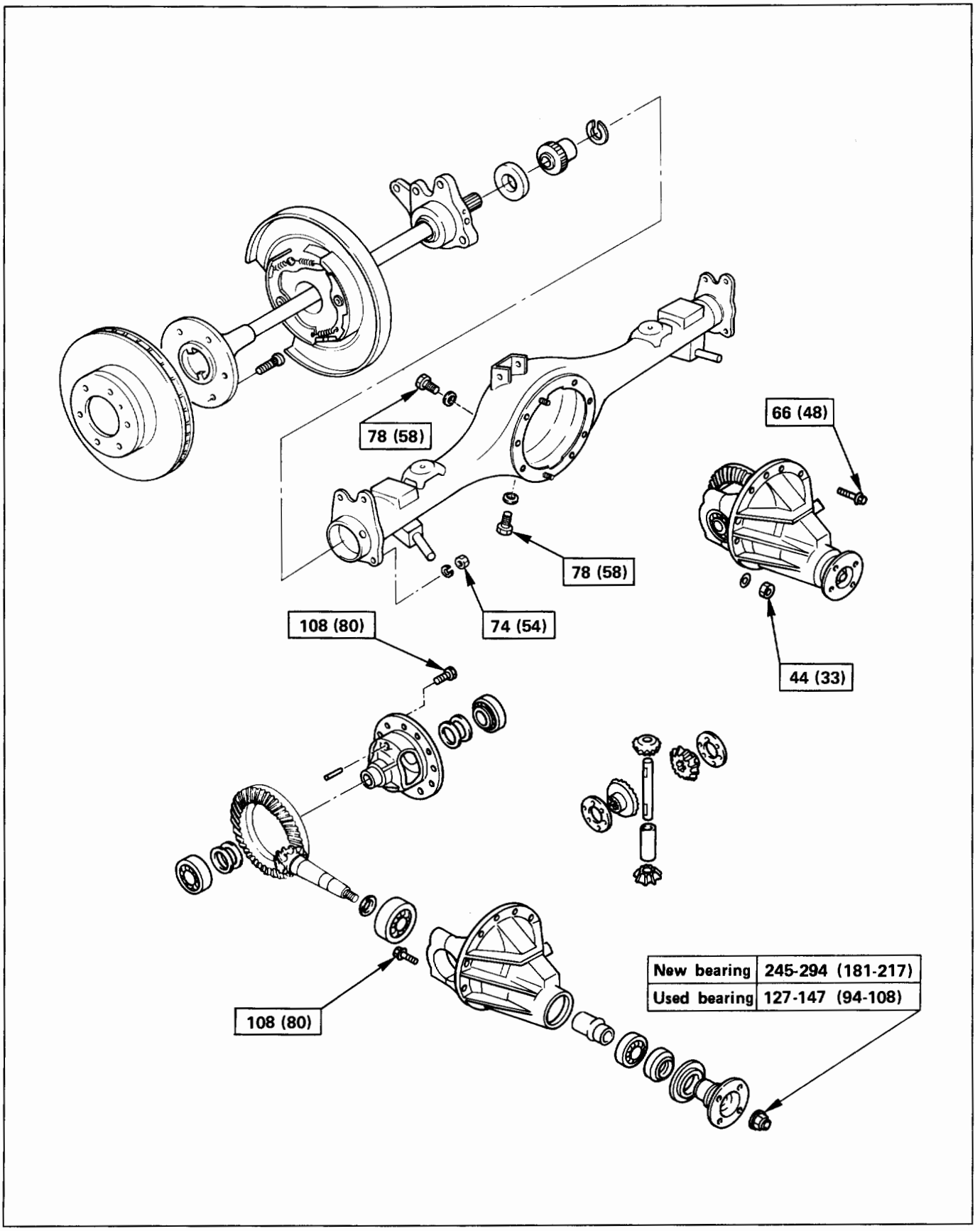

Fig. 4B-85

SPECIAL TOOLS

ILLUSTRATION	TOOL NO. TOOL NAME
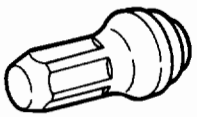	**J-39210** Installer: Axle shaft inner seal
	J-6627-A Wheel pin remover
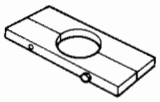	**J-39211** Remover: Axle shaft bearing
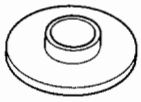	**J-39212** Installer: Axle shaft bearing
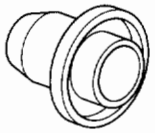	**J-39379** Installer: Outer axle seal
	J-37221 Pinion flange holder
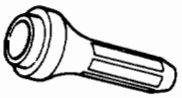	**J-37263** Installer: Pinion oil seal
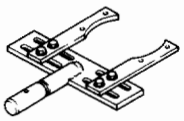	**J-37264** Differential holding fixture (Use with J-3289-20 base)
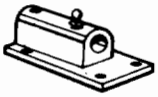	**J-3289-20** Holding fixture base
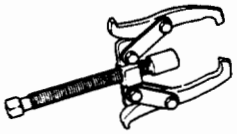	**J-22888** Puller: Side bearing
	J-8107-4 Adapter: Side bearing plug

ILLUSTRATION	TOOL NO. TOOL NAME
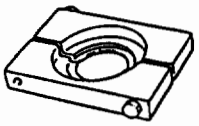	**J-37452** Remover: Pinion bearing
	J-37262 Installer: Outer bearing outer race
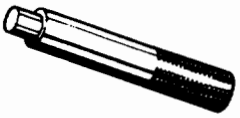	**J-8092** Grip
	J-37261 Installer: Inner bearing outer race
	J-21777-42 Pilot
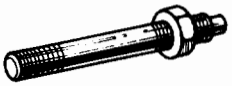	**J-21777-43** Nut & Bolt
	J-23597-12 Pilot
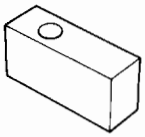	**J-23597-42** Gage plate
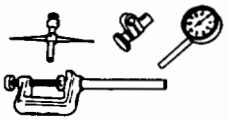	**J-8001** Dial indicator
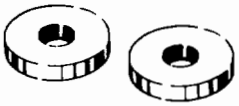	**J-21777-86** Disc (2 required)
	J-23597-1 Arbor

SPECIAL TOOLS

ILLUSTRATION	**TOOL NO.** TOOL NAME
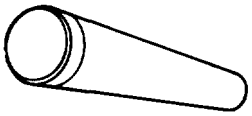	**J-6133-01** Installer: Pinion bearing
	J-39209 Punch: End nut lock
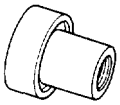	**J-37257** Installer: Side bearing
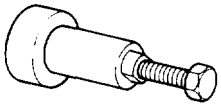	**J-39602** Remover: Outer bearing
	J-41033 Holder: Side gear

SECTION 4C

FRONT DRIVING AXLE

CAUTION:
When fasteners are removed, always reinstall them at the same location from which they were removed. If a fastener needs to be replaced, use the correct part number fastener for that application. If the correct part number fastener is not available, a fastener of equal size and strength (or stronger) may be used. Fasteners that are not reused, and those requiring thread locking compound, will be called out. The correct torque values must be used when installing fasteners that require torque. If the above conditions are not followed, parts or system damage could result.

CONTENTS

General Description 4C- 1
Diagnosis of Front Driving Axle 4C- 2
Automatic Locking Free Wheel Hub 4C- 3
On-Vehicle Service 4C- 4
Pinion Shaft Oil Seal Replacement 4C- 4
Front Drive Shaft Joints Replacement ... 4C- 5
Front Hub Bearing Preload Check 4C- 5
Unit Repair 4C- 6
Front Drive Axle Assembly 4C- 6
Front Axle Drive Shaft 4C- 9
Differential Assembly 4C-14
Differential Cage Assembly 4C-24
Front Hub and Disc (4WD Model with Automatic Locking Hub) 4C-28
Main Data and Specifications 4C-37
General Specifications 4C-37
Torque Specifications 4C-38
Special Tools 4C-41

GENERAL DESCRIPTION

This publication contains essential removal, installation, adjustment and maintenance procedures.
The front axle utilizes a central disconnect type front axle/transfer case system.

The drive axles are completely flexible assemblies, consisting of inner and outer constant velocity (CV) drive shaft joints connected by an axle shaft. For description of front propeller shaft and universal joint, refer to Section 4A "PROPELLER SHAFT".

DIAGNOSIS OF FRONT DRIVING AXLE

PROBLEM	POSSIBLE CAUSE	CORRECTION
Oil Leak At Front Axle	1. Worn or defective oil seal. 2. Front axle housing cracked.	1. Replace the oil seal. 2. Repair or replace.
Oil Leak At Pinion Shaft	1. Too much gear oil. 2. Oil seal worn or defective. 3. Pinion flange loose or damaged.	1. Correct the oil level. 2. Replace the oil seal. 3. Tighten or replace.
Noises In Front Axle Drive Shaft Joint	Broken or worn drive shaft joints and bellows (BJ and DOJ)	Replace the drive shaft joints and bellows.
"Clank" When Accelerating From "Coast"	1. Loose drive shaft joint to output shaft bolts. 2. Damaged inner drive shaft joint.	1. Tighten. 2. Replace.
Shudder or Vibration During Acceleration	1. Excessive drive shaft joint angle. 2. Worn or damaged drive shaft joints. 3. Sticking spider assembly (inner drive shaft joint). 4. Sticking joint assembly (outer drive shaft joint).	1. Repair. 2. Replace. 3. Lubricate or replace. 4. Lubricate or replace.
Vibration At Highway Speeds	1. Out of balance or out of round tires. 2. Front end out of alignment.	1. Balance or replace. 2. Align.
Noises in Front Axle	1. Insufficient gear oil. 2. Wrong or poor grade gear oil. 3. Drive pinion to ring gear backlash incorrect. 4. Worn or chipped ring gear, pinion gear or side gear. 5. Pinion shaft bearing worn. 6. Wheel bearing worn. 7. Differential bearing loose or worn.	1. Replenish the gear oil. 2. Replace the gear oil. 3. Adjust the backlash. 4. Replace the ring gear, pinion gear or side gear. 5. Replace the pinion shaft bearing. 6. Replace the wheel bearing. 7. Tighten or replace.
Wanders and Pulls	1. Wheel bearing preload too tight. 2. Incorrect front alignment. 3. Steering linkage loose or worn. 4. Steering gear out of adjustment. 5. Tire worn or improperly inflated. 6. Front or rear suspension parts loose or broken.	1. Adjust the wheel bearing preload. 2. Adjust the front alignment. 3. Tighten or replace. 4. Adjust or replace the steering gear. 5. Adjust the inflation or replace. 6. Tighten or replace.
Front Wheel Shimmy	1. Wheel bearing worn or improperly adjusted. 2. Incorrect front alignment. 3. Worn ball joint or bush. 4. Steering linkage loose or worn. 5. Steering gear out of adjustment. 6. Tire worn or improperly inflated. 7. Shock absorber worn.	1. Adjust or replace. 2. Adjust the front alignment. 3. Replace the ball joint or bush. 4. Tighten or replace. 5. Tighten or replace. 6. Replace or adjust the inflation. 7. Replace the shock absorber.

AUTOMATIC LOCKING FREE WHEEL HUB

(1) DOES NOT LOCK OR LOCKS ONLY ON ONE SIDE

NOTE:

Procedure for locking the locking hub.

1. Stop the vehicle.
2. Shift the transfer lever to 4H or 4L.
3. Start driving the vehicle slowly and the hubs will lock automatically.
4. Once the hubs are locked, they will remain locked, even if the transfer lever is shifted from 4L or 4H into 2H, as long as the vehicle travels in the same direction.

CHECKPOINT	CONDITION	CORRECTION
Try locking procedure once more	Still will not lock.	Inspect the drive clutch assembly, inner cam assembly, and housing, and replace if required.

(2) DOES NOT UNLOCK OR UNLOCKS ONLY ON ONE SIDE

NOTE:

Procedure for unlocking the locking hub.

1. Stop the vehicle.
2. Shift the transfer lever to 2H.
3. Run the vehicle for three or four feet slowly in the reverse direction.

CHECKPOINT	CONDITION	CORRECTION
Try unlocking procedure once more	Still will not unlock	Drive the vehicle for five minutes and then try the unlocking procedure again. If the locking hub does not unlock, then inspect the drive clutch assembly, inner cam assembly, and housing, and replace if required.

(3) NOISES IN AUTOMATIC LOCKING HUB

NOTE:

Some noise during shifting from "LOCK" to "FREE" or vice versa is normal.
It is not a sign of trouble.

POSSIBLE CAUSE	CORRECTION
1. Hold out ring axial play excessive.	1. Correct the axial play or replace the drive clutch.
2. Hub operates on one side.	2. Replace the drive clutch.
3. Front axle or joint damaged or loose.	3. Replace or tighten.

ON-VEHICLE SERVICE

PINION SHAFT OIL SEAL REPLACEMENT

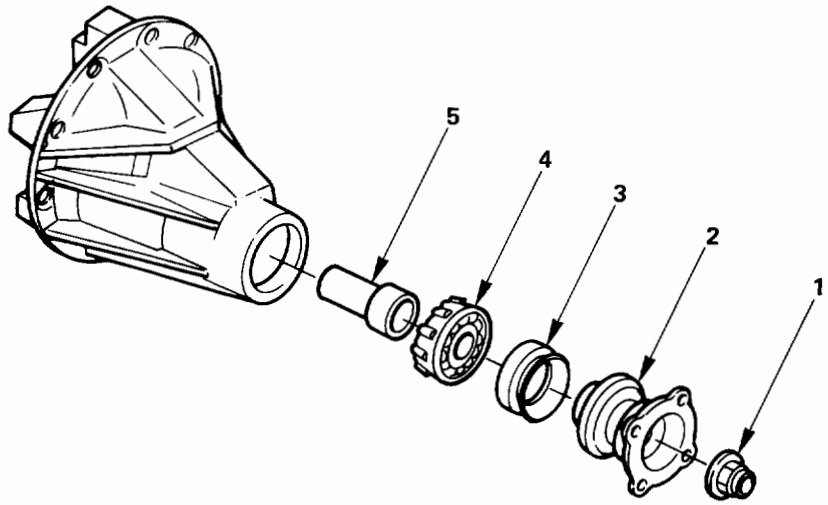

Removal steps
1. Flange nut
2. Flange
3. Oil seal
4. Outer bearing
5. Collapsible spacer

Installation steps
To install, follow the removal steps in reverse

Fig. 4C-1

REMOVAL

- Raise the vehicle and support it at the frame. The hoist must remain under the front axle housing.
- Drain the front axle oil (Fig. 4C-2).

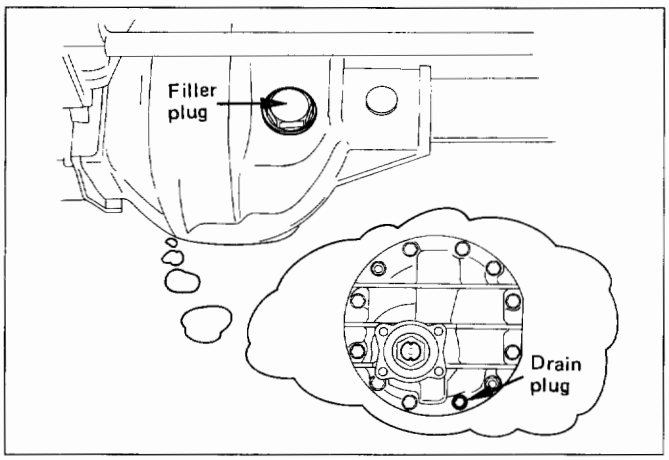

Fig. 4C-2

- Remove the front propeller shaft. Refer to Section 4A "PROPELLER SHAFT"

NOTE:
For vehicle with automatic locking hub, the front wheel hub may lock while performing propeller shaft removal. In such a case, free the front wheels from hoist or jack and turn the front wheel manually to unlock the front wheel hub.

1. **Flange nut (Fig. 4C-3)**
   - Using special tool, remove the flange nut.

   Pinion flange holder: J-37221

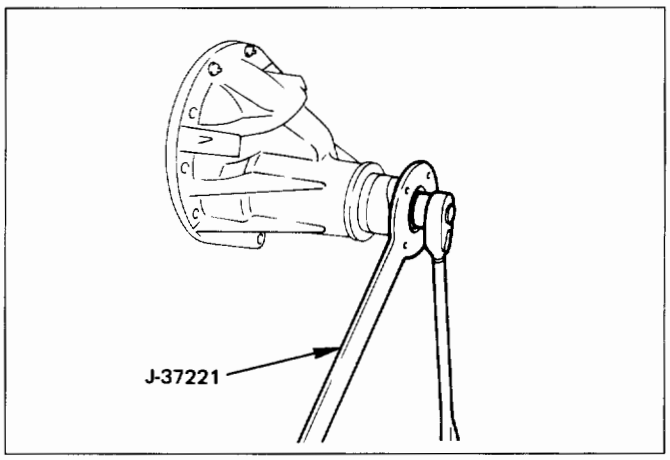

Fig. 4C-3

2. **Flange**
3. **Oil seal**
4. **Outer bearing**
   - Using special tool, remove the outer bearing (Fig. 4C-3a).
     Remover: J-39602

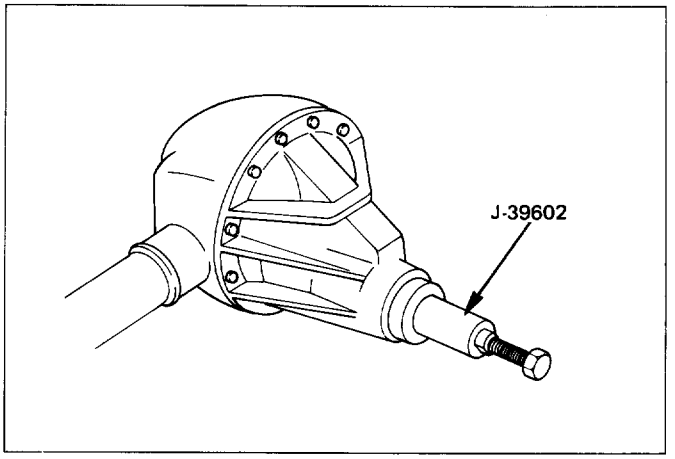

Fig. 4C-3a

5. **Collapsible spacer**

INSPECTION AND REPAIR

Make necessary correction or parts replacement if wear, damage, corrosion or any other abnormal condition are found through inspection.
Check the following parts.
- Seal surface of the pinion.
- Cage bore for burns.

INSTALLATION

5. **Collapsible spacer**
   - Discard the used collapsible spacer and install a new one.
4. **Outer bearing**
   NOTE:
   - Do not drive in, but just temporarily set in the outer bearing by hand, which should be indirectly pressed in finally by tightening the flange nut.
3. **Oil seal (Fig. 4C-4)**
   - Use oil seal installer to install a new oil seal that has been soaked in axle lubricant.
     Installer: J-24250

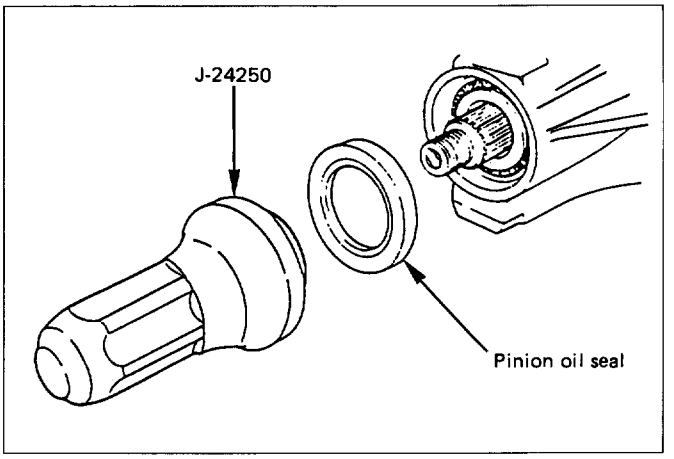

Fig. 4C-4

2. **Flange**
1. **Flange nut**
   - Refer to "DIFFERENTIAL ASSEMBLY" for flange nut reassembly in this section.

   NOTE:
   - Discard the used nut and install a new one.

FRONT DRIVE SHAFT JOINTS REPLACEMENT

- Refer to "FRONT DRIVE AXLE ASSEMBLY" and "FRONT HUB AND DISC" in this section.

FRONT HUB BEARING PRELOAD CHECK

- Check the hub bearing preload at the wheel pin (Fig. 4C-5).

N (lb)

New bearing and New oil seal	19.6-24.5 (4.4-5.5)
Reused bearing and New oil seal	11.8-17.7 (2.6-4.0)

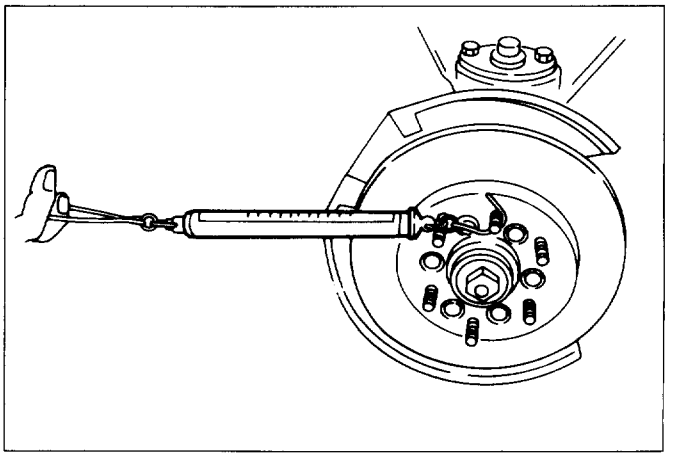

Fig. 4C-5

UNIT REPAIR

FRONT DRIVE AXLE ASSEMBLY

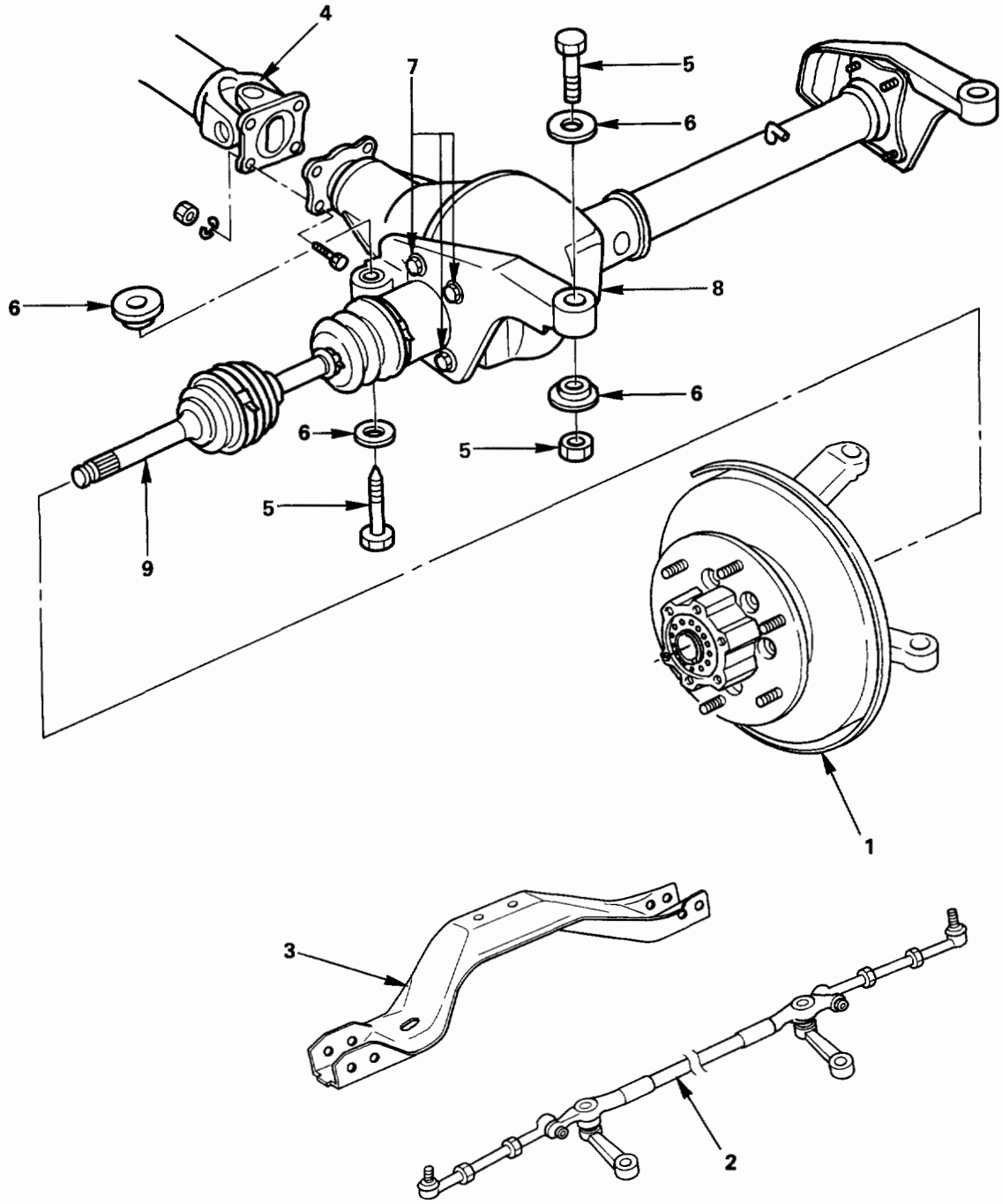

Disassembly steps

1. Hub assembly
2. Steering link and arm assembly
3. Suspension crossmember
4. Propeller shaft
5. Mounting bolt and nut
6. Washer and spacer
7. Bolt (Right side)
8. Front axle case assembly and front drive shaft assembly (Left side)
9. Front drive shaft assembly (Right side)

Reassembly steps

To reassemble, follow the disassembly steps in the reverse order.

Fig. 4C-6

DISASSEMBLY

- Jack up the vehicle and support it using jack stands.
- Remove the tire and wheel.
- Remove the drain bolt to drain differential oil.

NOTE:
- During the work, be sure that the diff case is supported by the jack (Fig. 4C-7).

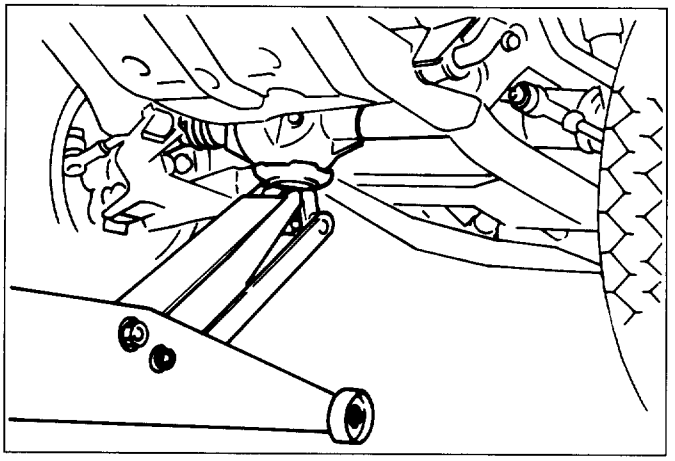

Fig. 4C-7

- Remove the brake caliper fixing bolt and hang the caliper. Refer to Section 5A2 "DISC BRAKES".
- Remove the antilock brake system speed sensor. (If equipped with antilock brake system) Refer to Section 5A4 "4-WHEEL ANTI-LOCK BRAKE SYSTEM (ABS)".

1. **Hub assembly (Disc, back plate and knuckle)**
   - Remove the locking hub. Refer to this Section "FRONT HUB AND DISC".
   - Disconnect the knuckle and the suspension arm. Refer to Section 3C "FRONT SUSPENSION".
2. **Steering link and arm assembly**
   - Refer to Section 3B3 "STEERING LINKAGE".
3. **Suspension crossmember**
4. **Propeller shaft**
   - Refer to Section 4A "PROPELLER SHAFT".
5. **Mounting bolt and nut (Fig. 4C-8)**

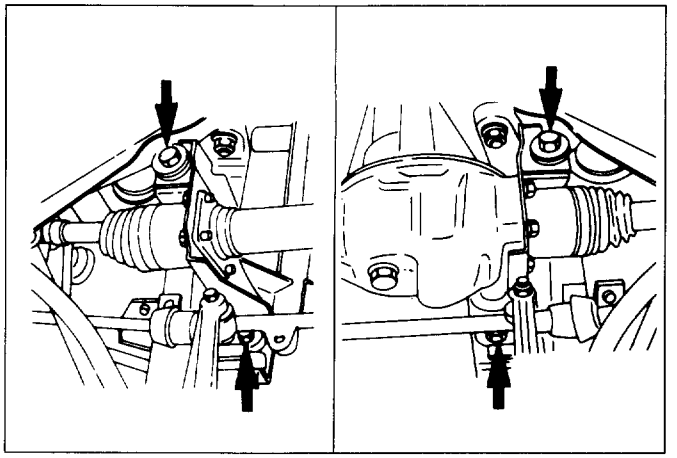

Fig. 4C-8

6. **Washer and spacer**
7. **Bolt (Fig. 4C-9)**
   - Remove the mounting bracket fixing bolt.

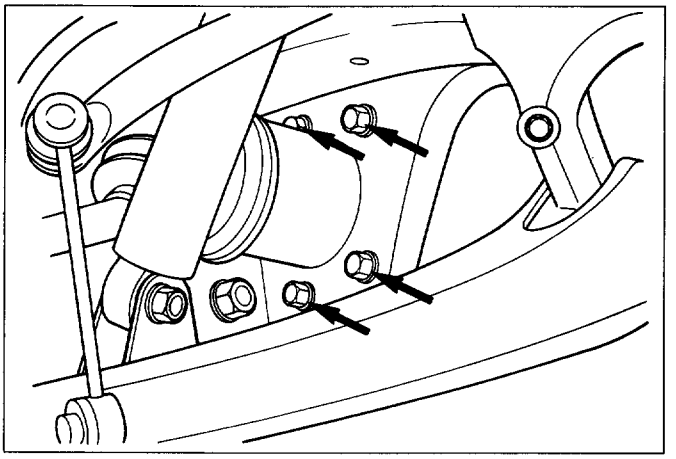

Fig. 4C-9

8. **Front axle case assembly and front drive shaft assembly (LH side) (Fig. 4C-10)**
   - Lower the vehicle and disconnect the RH front drive shaft assembly, and then remove the front axle case assembly and front drive shaft assembly (LH).

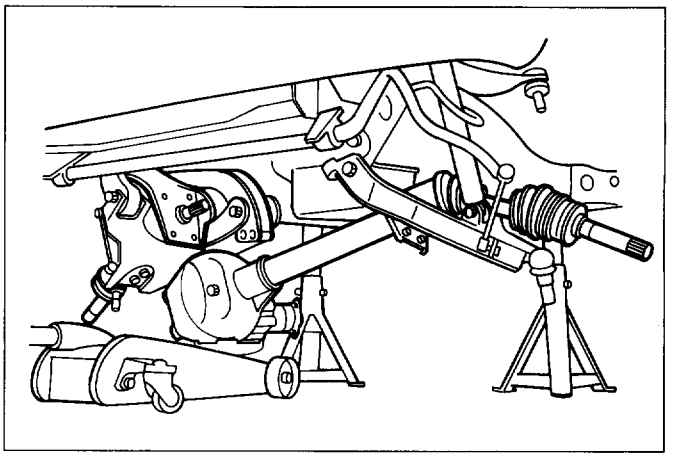

Fig. 4C-10

9. **Front drive shaft assembly (RH)**

REASSEMBLY

9. **Front drive shaft assembly (RH)**
   - Lay the assembly on the lower arm.
8. **Front axle case assembly and front drive shaft assembly (LH)**
   - Place the axle case on the jack, connect to the front drive shaft assembly (RH) before installing to the vehicle.
7. **Bolt**
   - Tighten the mounting bracket fixing bolt to the specified torque.

Torque N.m (lb·ft)	116 (85)

6. **Washer and spacer (Fig. 4C-11)**
5. **Mounting bolt and nut (Fig. 4C-11)**
   - Tighten the mounting bolt and nut to the specified torque.

Torque N·m (lb·ft)	152 (112)

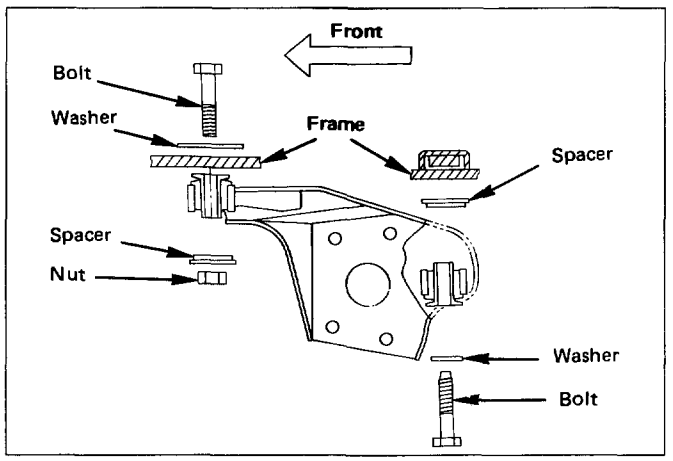

Fig. 4C-11

4. **Propeller shaft**
   - Refer to Section 4A "FRONT PROPELLER SHAFT".
3. **Suspension crossmember**
2. **Steering link and arm assembly**
   - Refer to Section 3B3 "STEERING LINKAGE".
1. **Hub assembly (Disc, back plate and knuckle)**
   - Refer to Section 5A2 "DISC BRAKES" and Section 3C "FRONT SUSPENSION".

FRONT AXLE DRIVE SHAFT

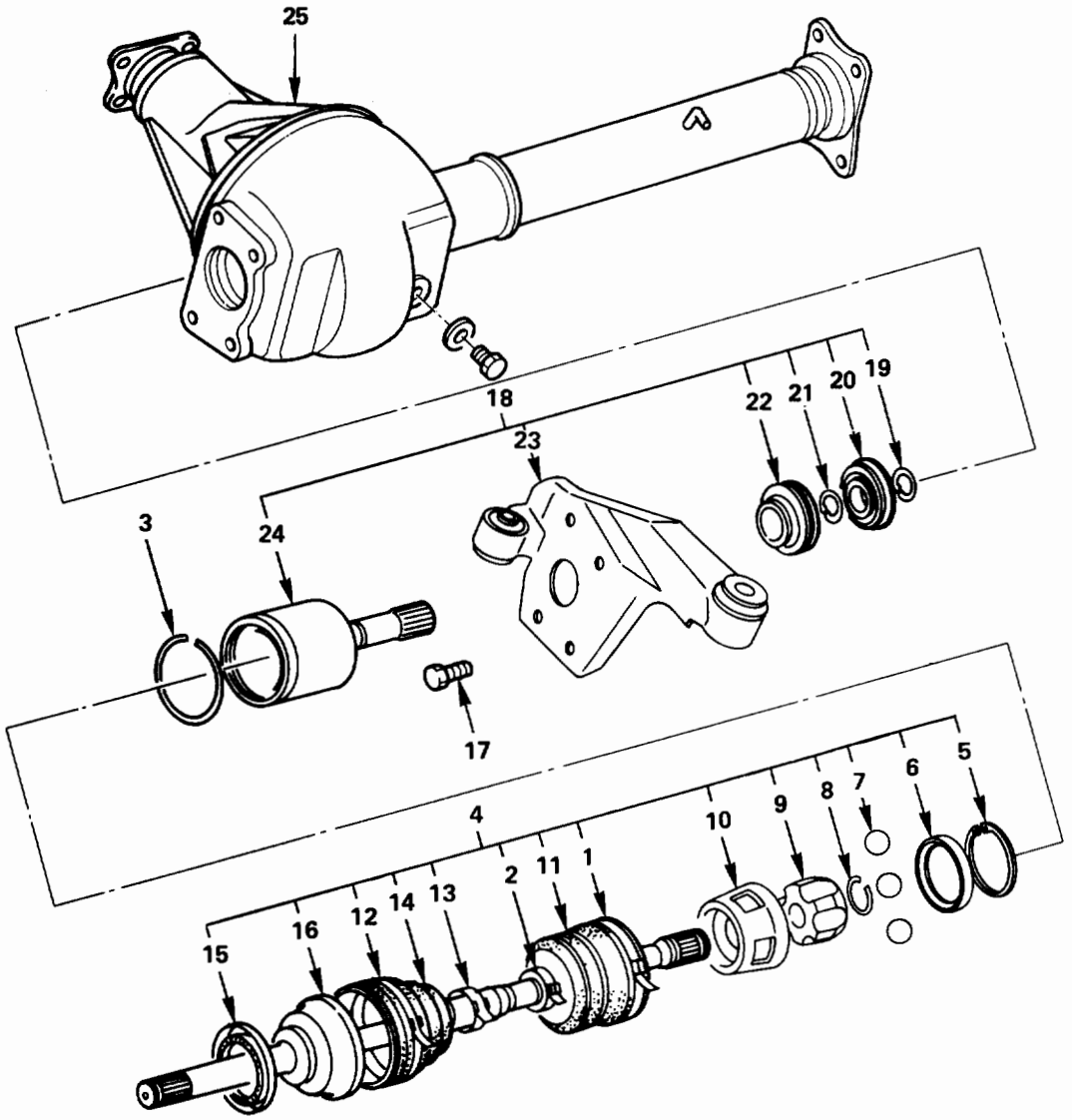

Disassembly steps

1. Band
2. Band
3. Circlip
4. Drive shaft joint assembly
5. Snap ring
6. Spacer
7. Ball
8. Snap ring
9. Ball retainer
10. Ball guide
11. Bellows
12. Band
13. Band
14. Bellows
15. Dust seal
16. BJ shaft
17. Bolt
18. DOJ case assembly
19. Snap ring
20. Bearing
21. Snap ring
22. Oil seal
23. Bracket
24. DOJ case
25. Axle case and differential

Reassembly steps

To reassemble, follow the disassembly steps in the reverse order.

Fig. 4C-12

DISASSEMBLY

NOTE:
- For the left side, follow the same steps as right side.

1. **Band**
   - Raise the hooked end of the band with a screwdriver or equivalent (Fig. 4C-13).

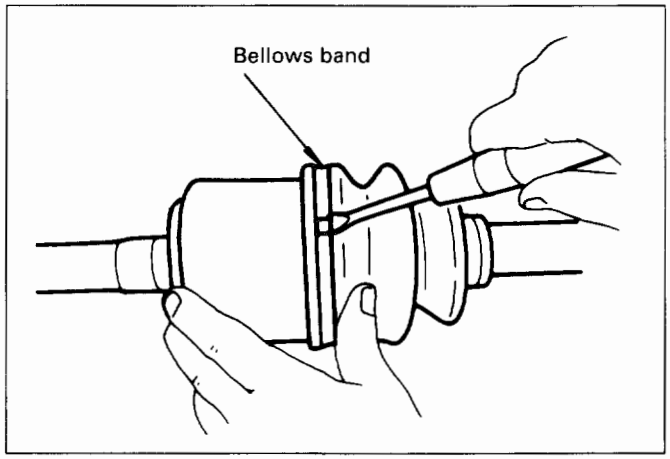

Fig. 4C-13

2. **Band**
3. **Circlip**
   - Pry off with a screwdriver or equivalent (Fig. 4C-14).

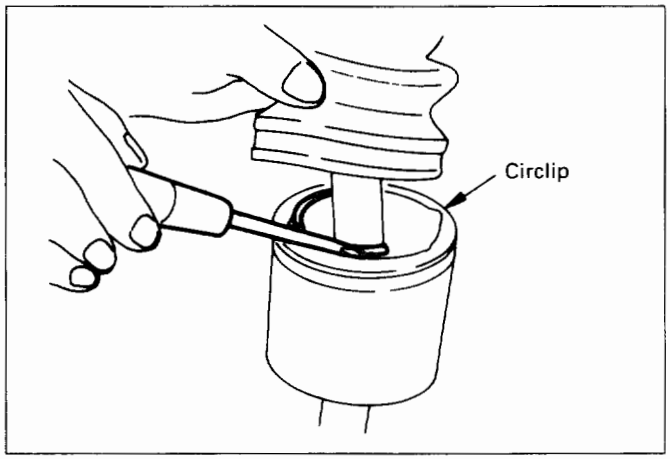

Fig. 4C-14

4. **Drive shaft joint assembly**
5. **Snap ring**
   - Using snapping pliers, remove the snap ring (Fig. 4C-15).

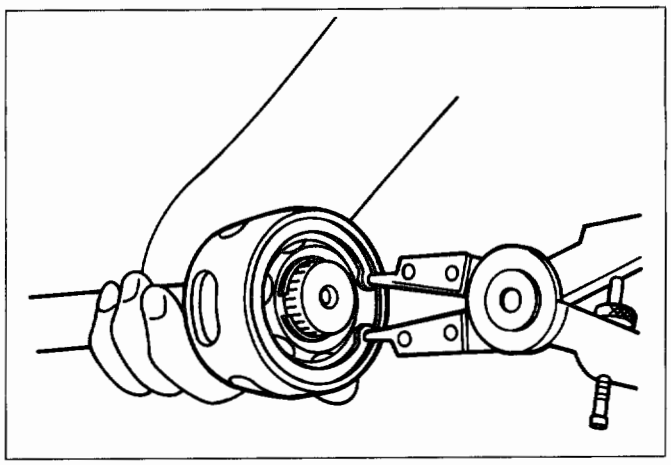

Fig. 4C-15

6. **Spacer**
7. **Ball**
   - Remove the six balls with a screwdriver or equivalent (Fig. 4C-16).

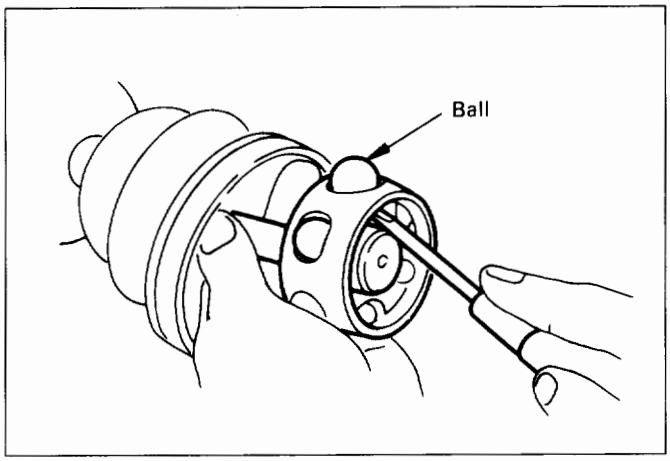

Fig. 4C-16

8. **Snap ring**
   - Using snap ring pliers, remove the snap ring fastening the ball retainer to the center shaft (Fig. 4C-17).

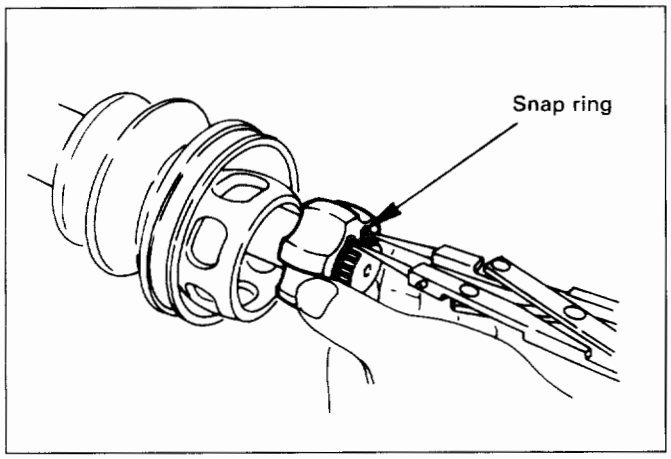

Fig. 4C-17

9. **Ball retainer**
10. **Ball guide**
11. **Bellows**
12. **Band**
    - Raise the hooked end of the band with a screwdriver or equivalent (Fig. 4C-18).

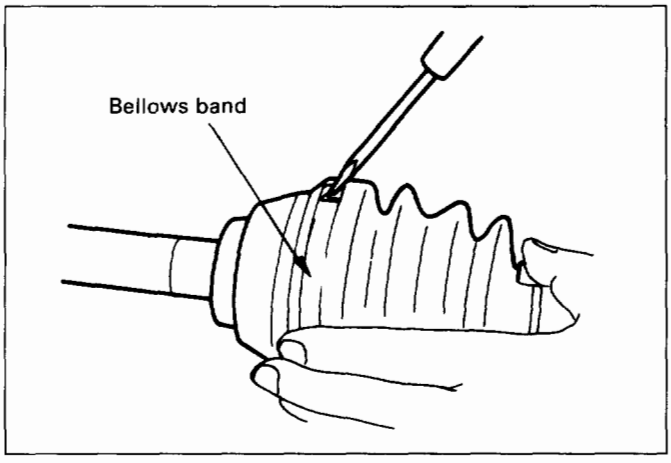

Fig. 4C-18

13. **Band**
14. **Bellows**
15. **Dust seal**
16. **BJ shaft assembly**
17. **Bolt**
    - Remove the mounting bracket fixing bolts, and then remove the front axle drive shaft from the axle case.
18. **DOJ case assembly**
19. **Axle case and differential**
20. **Snap ring**
21. **Bearing**
22. **Snap ring**
23. **Oil seal**
24. **Bracket**
25. **DOJ case**

INSPECTION AND REPAIR

Make necessary correction or parts replacement if wear, damage, corrosion or any other abnormal condition are found through inspection.
Check the following parts.

- Drive shaft joint assembly
- DOJ case, ball, ball guide, ball retainer
- Bellows
- Bearing
- Dust seal, oil seal

BUSHING REPLACEMENT

- Remove the bushings using a remover and hammer (Fig. 4C-19).

Remover: J-39378-1

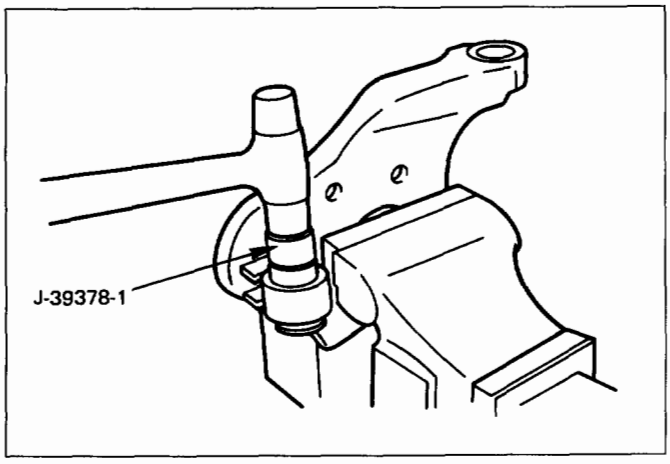

Fig. 4C-19

- Press fit the bushings into the bracket (Fig. 4C- 20).

Installer: J-39378-2
Base: J-39378-3

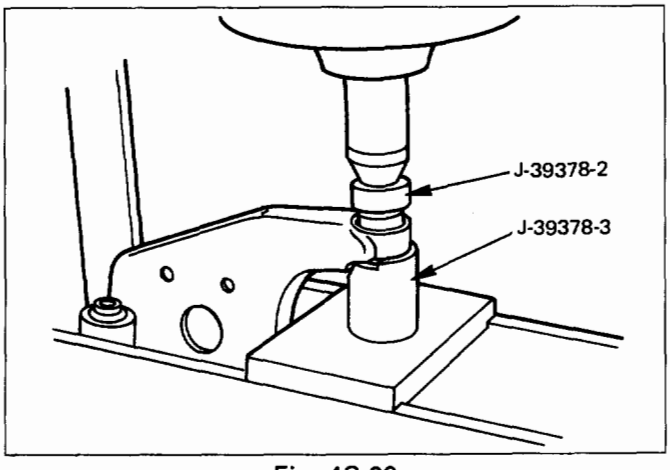

Fig. 4C-20

REASSEMBLY

25. **DOJ case**
24. **Bracket**
23. **Oil seal**
22. **Snap ring**
21. **Bearing**
20. **Snap ring**
19. **Axle case and differential**
18. **DOJ case assembly**
17. **Bolt**
    - Tighten the bracket bolt to the specified torque.

Torque N·m (lb·ft)	116 (85)

16. **BJ shaft assembly**
    - Inclose 150g of the specified grease in BJ.

15. Dust seal

14. Bellows

- Apply a thin coat of grease to the shaft for smooth installation.

13. Band (Fig. 4C-21)

- Note the setting direction.
- After installation, check that the bellows is free from distortion.

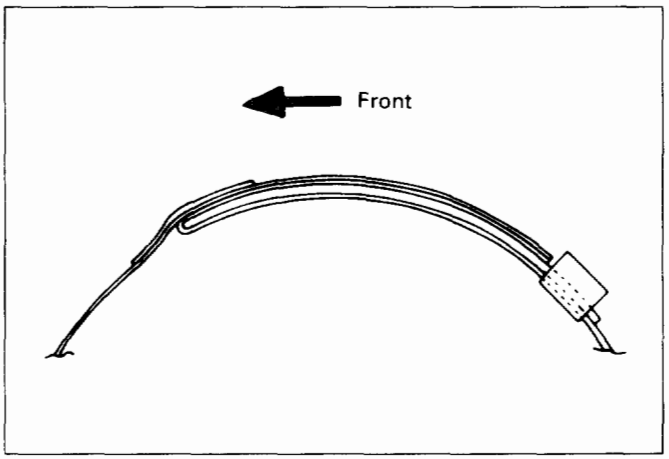

Fig. 4C-21

12. Band

11. Bellows

10. Ball guide

- Install the ball guide with the smaller diameter side ahead onto the shaft.

9. Ball retainer

8. Snap ring

- Using snap ring pliers, install the snap ring securing the ball retainer to the shaft (Fig. 4C-17.

7. Ball (Fig. 4C-22)

- Align the track on the ball retainer with the window in the cage, and install the six balls into position.

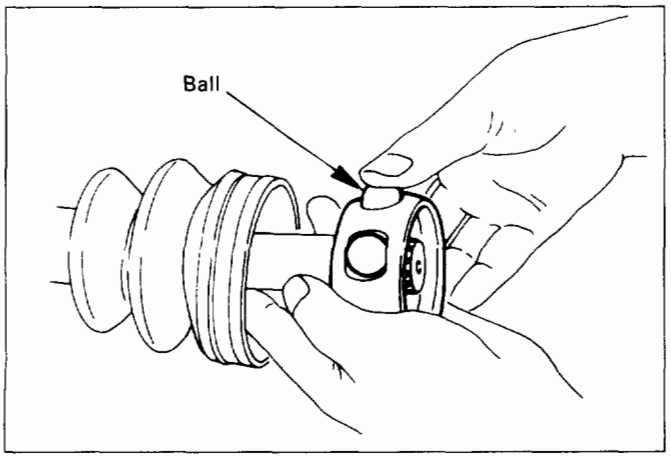

Fig. 4C-22

6. Spacer

5. Snap ring

4. Drive shaft joint assembly

- Inclose 150 g of the specified grease in DOJ case, and after reassembly, move the DOJ longitudinally several times to get to fit.

3. Circlip (Fig. 4C-23, 4C-24)

- Install the circlip so that open ends are positioned away from the ball groove.

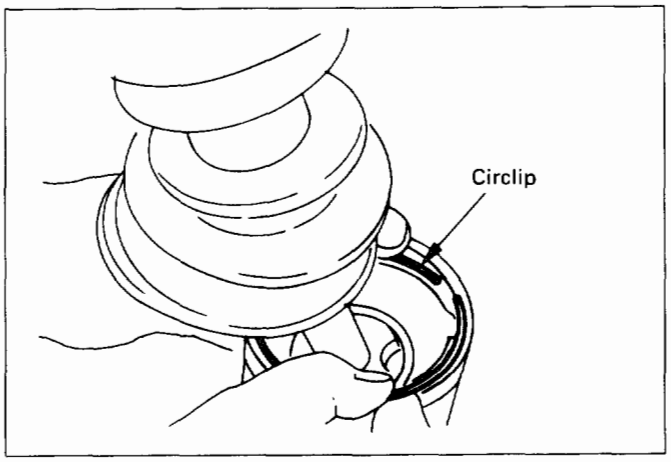

Fig. 4C-23

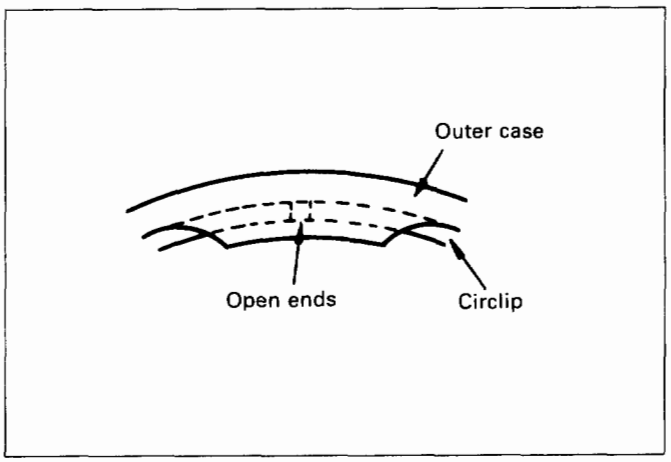

Fig. 4C-24

2. Bellows

- Before installation, insert the appropriate amount of specified grease into the DOJ case.
- Adjust the air pressure within the bellows by inserting a screwdriver or equivalent, so that it equals atmospheric pressure (Fig. 4C-25).

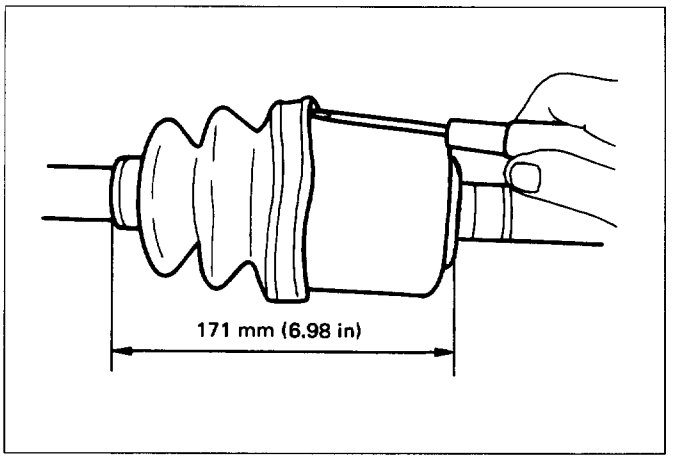

Fig. 4C-25

1. **Band**
   - After installation, check that the bellows is free from distortion.

DIFFERENTIAL ASSEMBLY

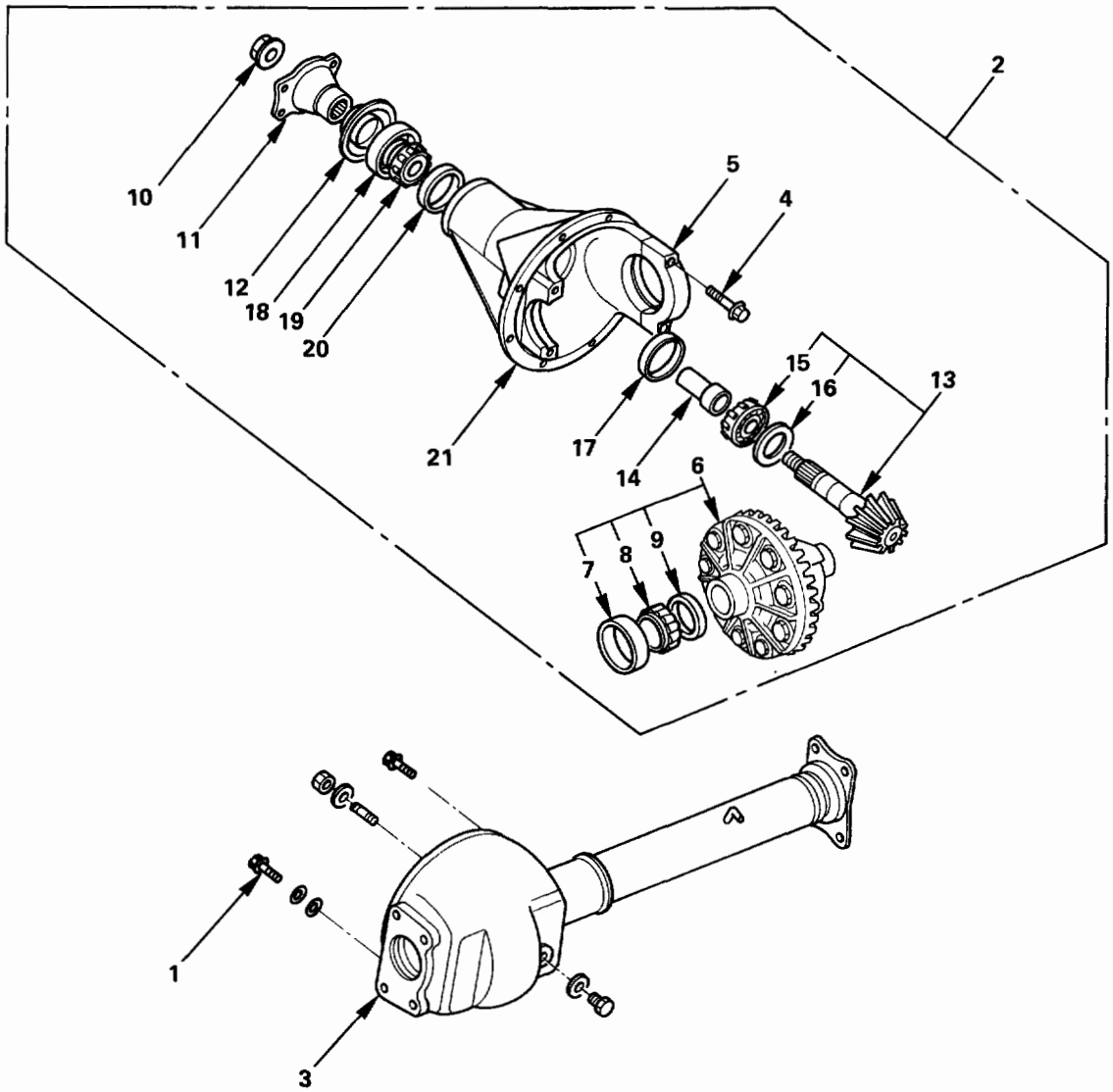

Disassembly steps

1. Bolt
2. Differential assembly
3. Axle case
4. Bolt
5. Bearing cap
6. Diff. cage assembly
7. Side bearing outer race
8. Side bearing
9. Adjust shim
10. Flange nut
11. Flange
12. Dust cover
13. Pinion gear
14. Collapsible spacer
15. Inner bearing
16. Adjust shim
17. Inner bearing outer race
18. Oil seal
19. Outer bearing
20. Outer bearing outer race
21. Diff. carrier

Reassembly steps

21. Diff. carrier
20. Outer bearing outer race
17. Inner bearing outer race
16. Adjust shim
15. Inner bearing
14. Collapsible spacer
13. Pinion gear
19. Outer bearing
18. Oil seal
12. Dust cover
11. Flange
10. Flange nut
9. Adjust shim
8. Side bearing
7. Side bearing outer race
6. Diff. cage assembly
5. Bearing cap
4. Bolt
3. Axle case
2. Differential assembly
1. Bolt

Fig. 4C-26

DISASSEMBLY

1. **Bolt**
2. **Differential assembly**
3. **Axle case**
   - Using special tools, fix the differential assembly to the bench (Fig. 4C-27).

   Holding fixture: J-37264
   Holding fixture base: J-3289-20

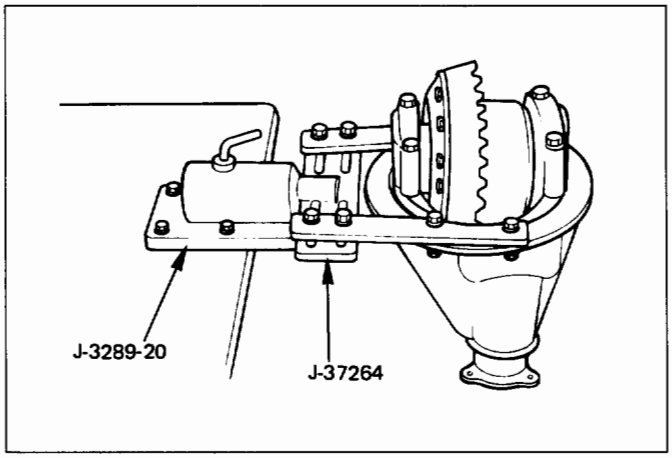

Fig. 4C-27

4. **Bolt**
5. **Bearing cap**
   - Apply a setting mark to the side bearing cap and the differential carrier (Fig. 4C-28).

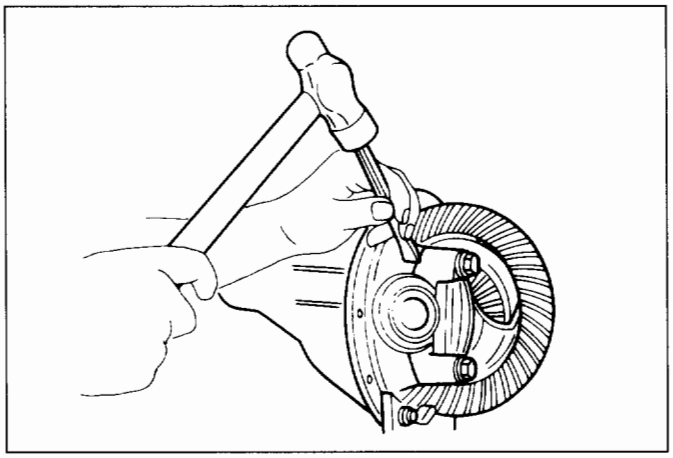

Fig. 4C-28

6. **Differential cage assembly**
7. **Side bearing outer race**
   - After removal, keep the right and left hand side bearing assemblies separate to maintain inner and outer race combinations.
8. **Side bearing**
   - Using special tools, remove the side bearing (Fig. 4C-29).

   Remover: J-22888
   Adapter: J-8107-2

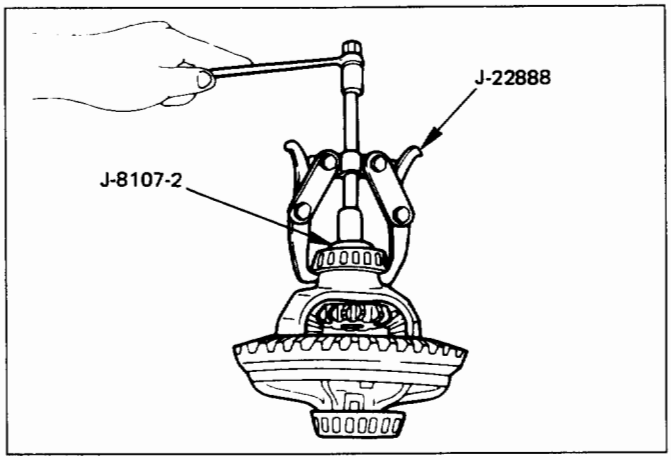

Fig. 4C-29

9. **Adjust shim**
   - Note the thickness and position of the shims removed.
10. **Flange nut**
    - Remove the flange nut using special tool after raising up its staked parts completely (Fig. 4C-30).

    Holding wrench: J-37221

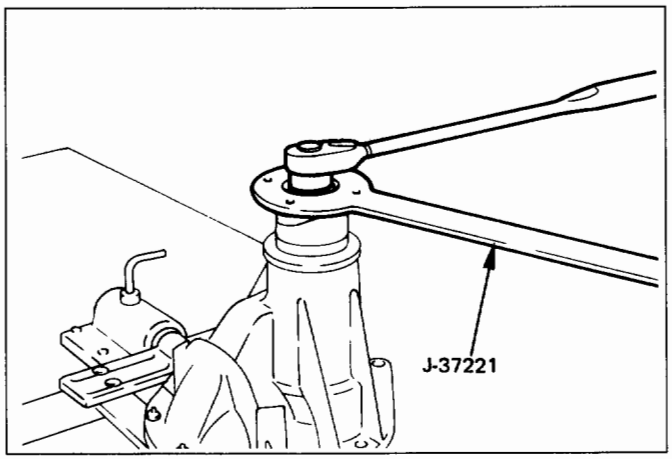

Fig. 4C-30

11. **Flange**
12. **Dust cover**

13. Pinion gear (Fig. 4C-31)

- Remove the drive pinion assembly using a soft metal rod and a hammer.

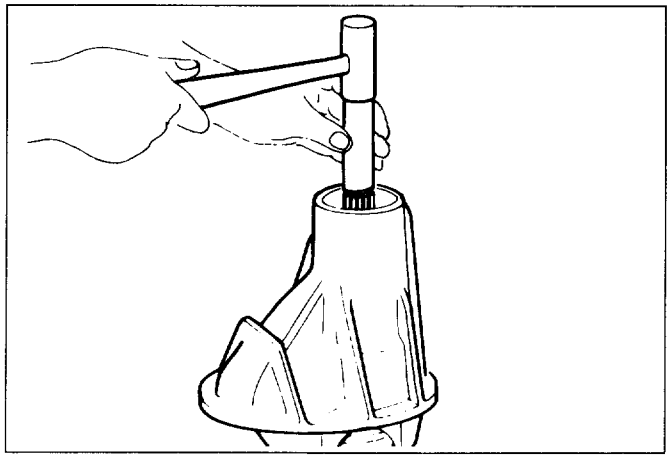

Fig. 4C-31

14. Collapsible spacer

15. Inner bearing (Fig. 4C-32)

- Remove the inner bearing using a separator and a press.

Separator: J-22912-01

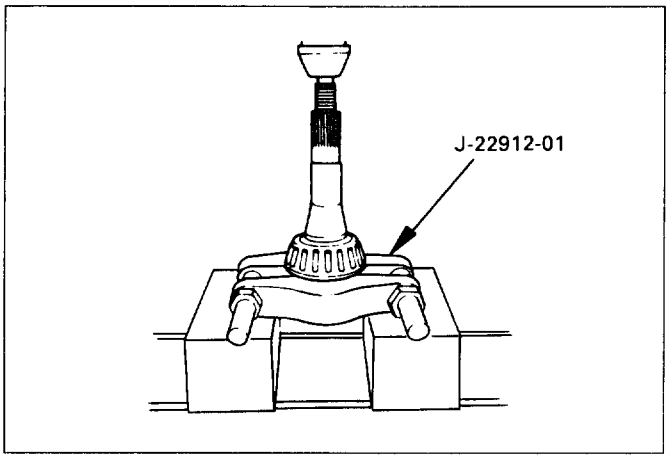

Fig. 4C-32

16. Adjust shim

17. Inner bearing outer race

18. Oil seal

19. Outer bearing

20. Outer bearing outer race

- Remove the inner bearing outer race and the outer bearing outer race by using a brass bar and a hammer (Fig. 4C-33, 4C-34).

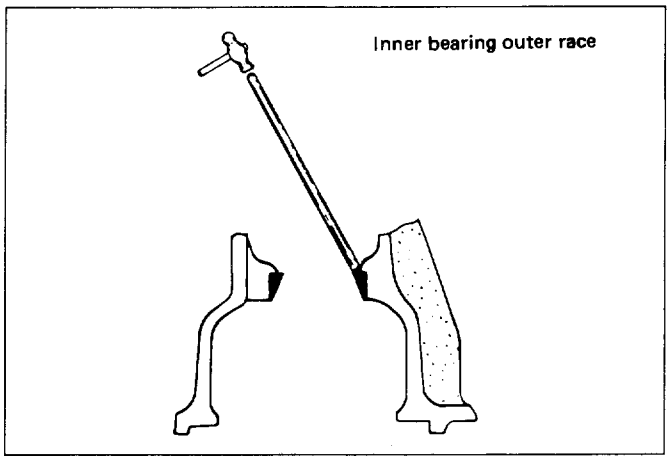

Fig. 4C-33

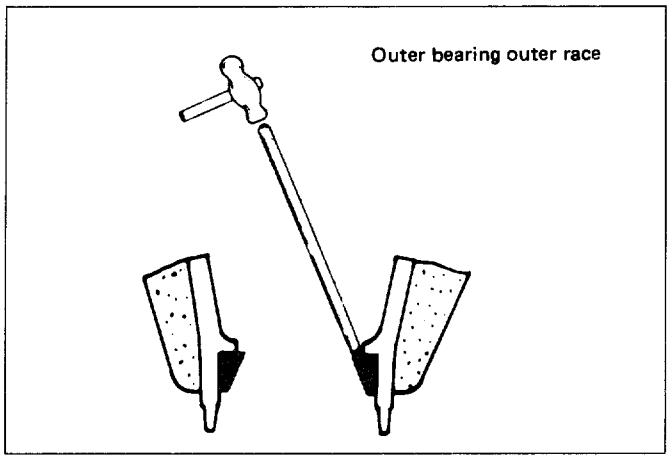

Fig. 4C-34

21. Differential carrier

REASSEMBLY

21. Differential carrier

20. Outer bearing outer race (Fig. 4C-35)

Installer: J-24256
Grip: J-8092

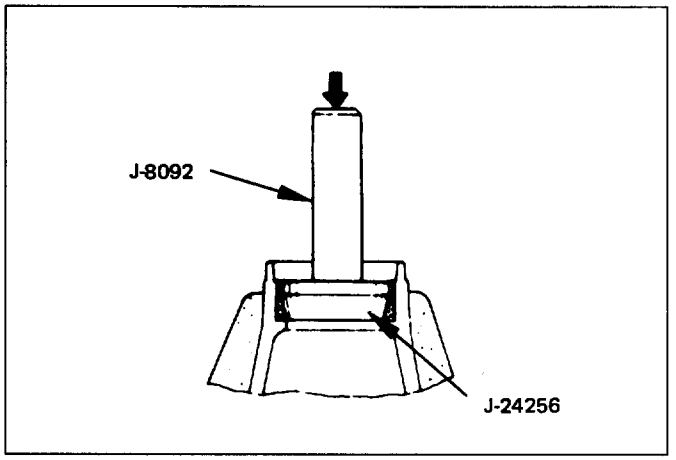

Fig. 4C-35

17. Inner bearing outer race (Fig. 4B-36)

Installer: J-24252
Grip: J-8092

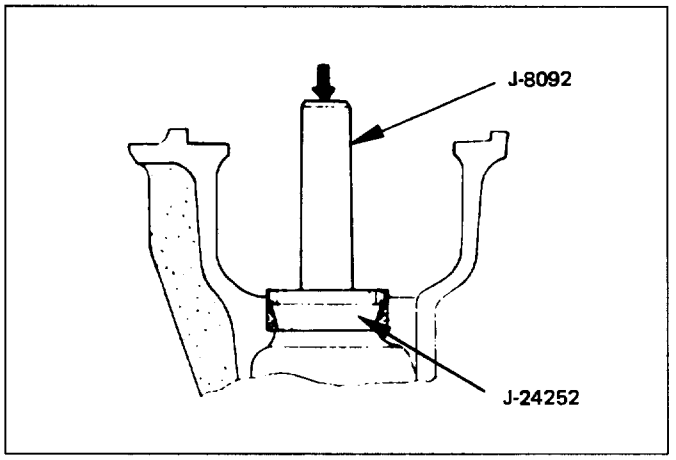

Fig. 4C-36

16. Adjust shim

- Adjustment of drive pinion mounting distance

1) Apply gear oil to the inner and outer drive pinion bearing.
   Clean the pinion setting gauge set.
   Then install the gauge set together with the inner and outer bearings (Fig. 4C-37).
   ① Pilot : J-21777-42
   ② Nut and bolt : J-23597-9
   ③ Gauge plate : J-23597-7

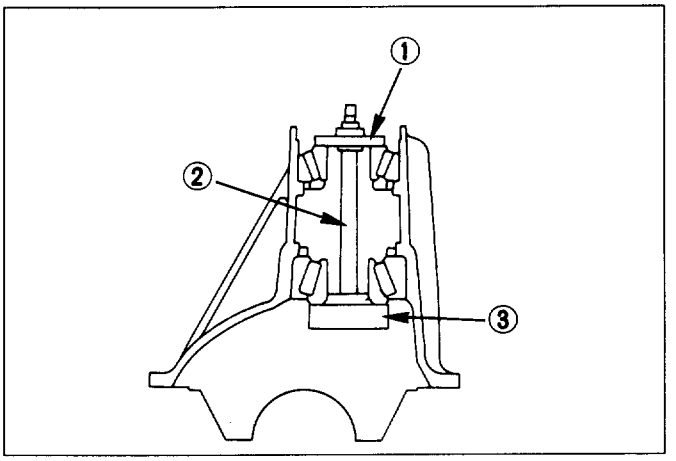

Fig. 4C-37

- Tighten the nut to the specified torque.

Torque N·m (lb·in)	New bearing	2.3 (20)
	Used bearing	1.1 (9.6)

2) Clean the side bearing bores. Install the dial indicator with the discs and arbor (Fig. 4C-38). Install and tighten the bearing caps to the specified torque.

Torque N·m (lb·ft)	98 (72)

① Dial indicator: J-8001
② Disc (2 pcs.): J-23597-8
③ Arbor: J-23597-1
④ Gauge plate: J-23597-42

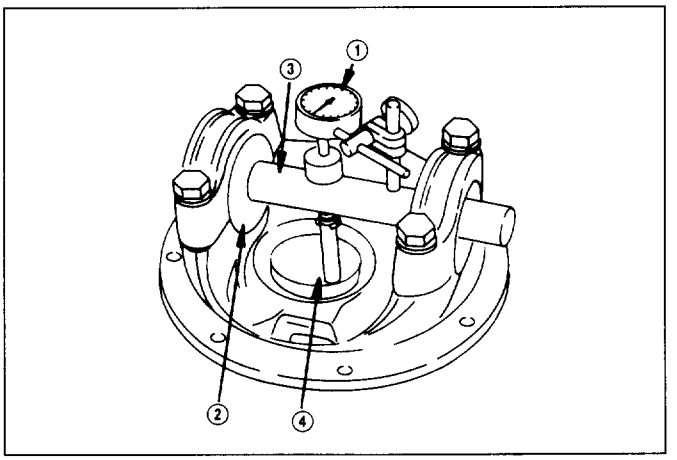

Fig. 4C-38

3) Set the dial indicator to "0". Place it on the mounting post of the gauging arbor with the contact button touching the indicator pad. Force the dial indicator downward until the needle has made a half turn clockwise. Tighten down the dial indicator in this position (Fig. 4C-39)

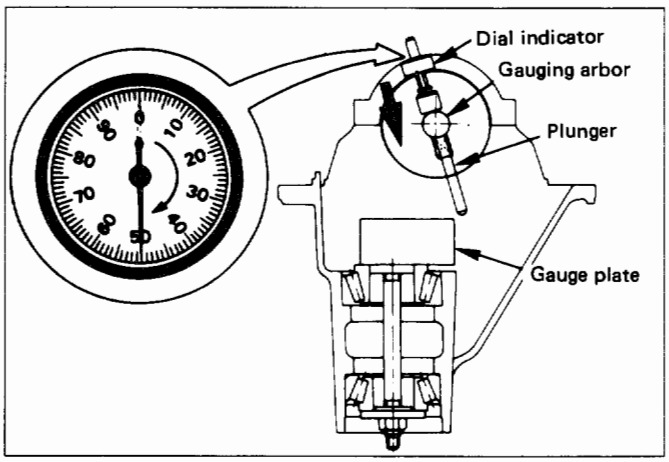

Fig. 4C-39

4) Position the plunger on the gauge plate. Move the gauging arbor slowly back and forth and locate the position at which the dial indicator shows the greatest defection. At this point, once again set the dial indicator to "0" (Fig. 4C-40).
Repeat the procedure to verify the "0" setting.

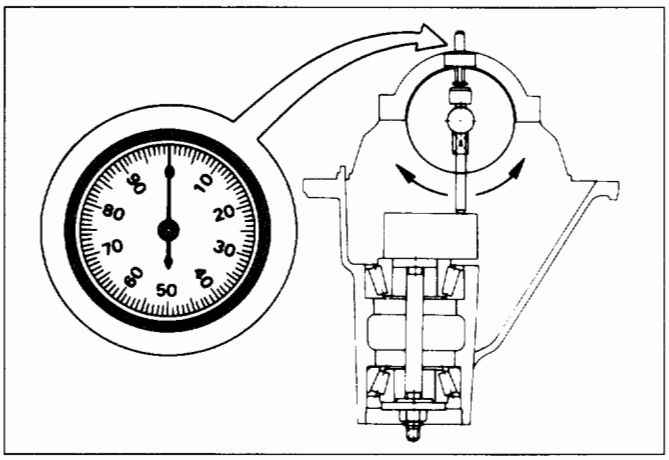

Fig. 4C-40

5) After the ZERO setting is obtained, rotate the gauging arbor until the dial indicator rod does not touch the gauging plate (Fig. 4C-41).
Record the number the dial indicator needle points to.

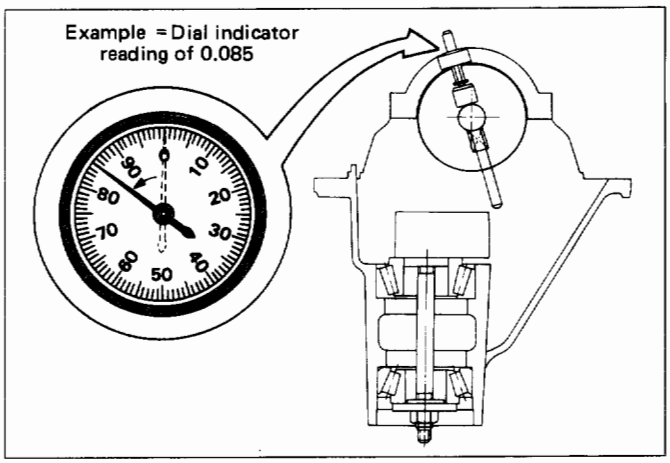

Fig. 4C-41

6) Record the pinion depth code on the head of the drive pinion (Fig. 4C-42).
The number indicates a necessary change in the pinion mounting distance. A plus number indicates the need for a greater mounting distance (which can be achieved by decreasing the shim thickness). A minus number indicates the need for a smaller mounting distance (which can be achieved by increasing the shim thickness). If examination reveals pinion depth code "0", the pinion is "nominal".

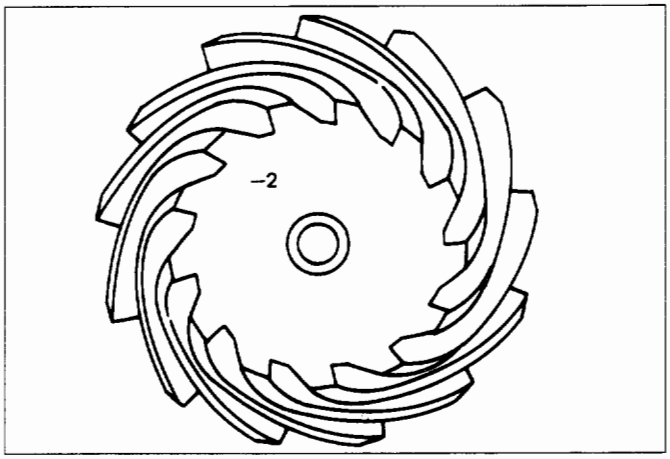

Fig. 4C-42

7) Select the shim using the chart;

Pinion marking / Dial indicator reading (Inches)	+10	+8	+6	+4	+2	0	−2	−4	−6	−8	−10
0.081											2.18(0.0858)
0.082										2.18(0.0858)	2.20(0.0866)
0.083									2.18(0.0858)	2.20(0.0866)	2.23(0.0882)
0.084								2.18(0.0858)	2.20(0.0866)	2.24(0.0882)	2.26(0.0890)
0.085							2.18(0.0858)	2.20(0.0866)	2.24(0.0882)	2.26(0.0890)	2.28(0.0898)
0.086						2.18(0.0858)	2.20(0.0866)	2.24(0.0882)	2.26(0.0890)	2.28(0.0898)	2.32(0.0914)
0.087					2.18(0.0858)	2.20(0.0866)	2.24(0.0882)	2.26(0.0890)	2.28(0.0898)	2.32(0.0914)	2.34(0.0921)
0.088				2.18(0.0858)	2.20(0.0866)	2.24(0.0882)	2.26(0.0890)	2.28(0.0898)	2.32(0.0914)	2.34(0.0921)	2.36(0.0929)
0.089			2.18(0.0858)	2.20(0.0866)	2.24(0.0882)	2.26(0.0890)	2.28(0.0898)	2.32(0.0914)	2.34(0.0921)	2.36(0.0929)	2.38(0.0937)
0.090		2.18(0.0858)	2.20(0.0866)	2.24(0.0882)	2.26(0.0890)	2.28(0.0898)	2.32(0.0914)	2.34(0.0921)	2.36(0.0929)	2.38(0.0937)	2.42(0.0953)
0.091	2.18(0.0858)	2.20(0.0866)	2.24(0.0882)	2.26(0.0890)	2.28(0.0898)	2.32(0.0914)	2.34(0.0921)	2.36(0.0929)	2.38(0.0937)	2.42(0.0953)	2.44(0.0961)
0.092	2.20(0.0866)	2.24(0.0882)	2.26(0.0890)	2.28(0.0898)	2.32(0.0914)	2.34(0.0921)	2.36(0.0929)	2.38(0.0937)	2.42(0.0953)	2.44(0.0961)	2.46(0.0969)
0.093	2.24(0.0882)	2.26(0.0890)	2.28(0.0898)	2.32(0.0914)	2.34(0.0921)	2.36(0.0929)	2.38(0.0937)	2.42(0.0953)	2.44(0.0961)	2.46(0.0969)	2.48(0.0977)
0.094	2.26(0.0890)	2.28(0.0898)	2.32(0.0914)	2.34(0.0921)	2.36(0.0929)	2.38(0.0937)	2.42(0.0953)	2.44(0.0961)	2.46(0.0969)	2.48(0.0977)	2.52(0.0992)
0.095	2.28(0.0898)	2.32(0.0914)	2.34(0.0921)	2.36(0.0929)	2.38(0.0937)	2.42(0.0953)	2.44(0.0961)	2.46(0.0969)	2.48(0.0977)	2.52(0.0992)	2.54(0.1000)
0.096	2.32(0.0914)	2.34(0.0921)	2.36(0.0929)	2.38(0.0937)	2.42(0.0953)	2.44(0.0961)	2.46(0.0969)	2.48(0.0977)	2.52(0.0992)	2.54(0.1000)	2.56(0.1008)
0.097	2.34(0.0921)	2.36(0.0929)	2.38(0.0937)	2.42(0.0953)	2.44(0.0961)	2.46(0.0969)	2.48(0.0977)	2.52(0.0992)	2.54(0.1000)	2.56(0.1008)	
0.098	2.36(0.0929)	2.38(0.0937)	2.42(0.0953)	2.44(0.0961)	2.46(0.0969)	2.48(0.0977)	2.52(0.0992)	2.54(0.1000)	2.56(0.1008)		
0.099	2.38(0.0937)	2.42(0.0953)	2.44(0.0961)	2.46(0.0969)	2.48(0.0977)	2.52(0.0992)	2.54(0.1000)	2.56(0.1008)			
0	2.42(0.0953)	2.44(0.0961)	2.46(0.0969)	2.48(0.0977)	2.52(0.0992)	2.54(0.1000)	2.56(0.1008)				
0.001	2.44(0.0961)	2.46(0.0969)	2.48(0.0977)	2.52(0.0992)	2.54(0.1000)	2.56(0.1008)					
0.002	2.46(0.0969)	2.48(0.0977)	2.52(0.0992)	2.54(0.1000)	2.56(0.1008)						
0.003	2.48(0.0977)	2.52(0.0992)	2.54(0.1000)	2.56(0.1008)							
0.004	2.52(0.0992)	2.54(0.1000)	2.56(0.1008)								
0.005	2.54(0.1000)	2.56(0.1008)									
0.006	2.56(0.1008)										

NOTE:
When ordering shims, find the part number in the parts catalog by using the thickness of shims listed in the above table.

15. Inner bearing

- Place the shim on the drive pinion, with the chamfered side turned towards the pinion head then install the inner bearing onto the pinion using an installer and a press(Fig. 4C-43).
  Installer: J-6133-01
  NOTE:
  Do not apply pressure to the roller cage.
  Apply pressure only to the inner race.

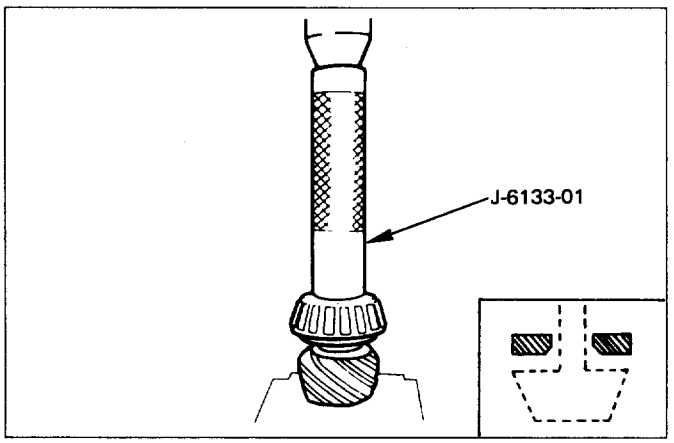

Fig. 4C-43

14. Collapsible spacer

- Discard the used collapsible spacer and install a new one.

13. Pinion gear

19. Outer bearing

18. Oil seal

- Use oil seal installer to install a new oil seal that has been soaked in rear axle lubricant (Fig. 4C-44).
  Installer: J-24250
  NOTE:
  Take care to use a front differential oil seal, NOT the rear differential oil seal.

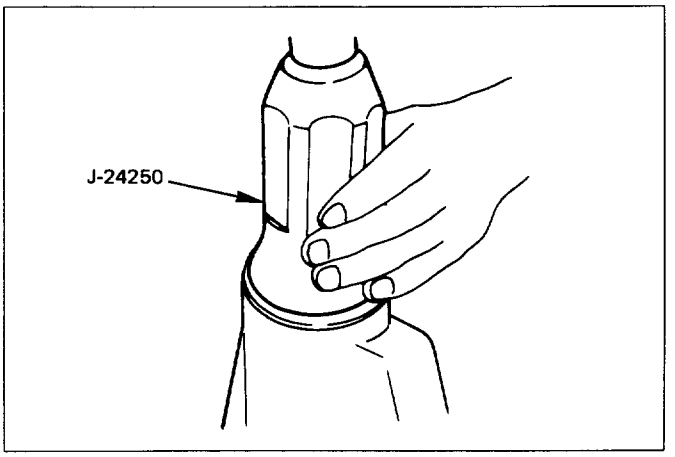

Fig. 4C-44

12. Dust cover

11. Flange

10. Flange nut

1) Apply lubricant to the pinion threads.
2) Tighten the nut to the specified torque using the pinion flange holder (Fig. 4C-45).
   Pinion flange holder: J-37221

Torque N·m (lb·ft)	New bearing	177-275 (130-203)
	Used bearing	89-137 (65-101)

NOTE:
- Discard used flange nut and install new one.
- Do not over tighten the flange nut.

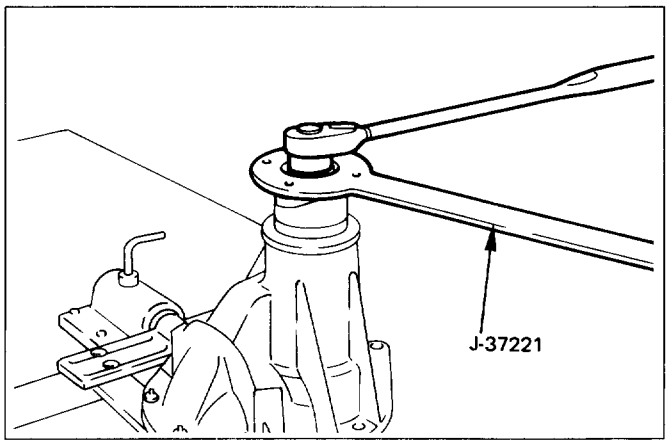

Fig. 4C-45

3) Pinion bearing preload
(a) Measure the bearing preload by using a torque meter.
   Note the scale reading required to rotate the flange.
(b) Continue tightening flange nut until the specified starting torque is obtained (Fig. 4C-46).

Starting torque N·m (lb·in)	New bearing	0.7-1.1 (5.64-9.98)
	Used bearing	0.4-0.5 (2.86-4.94)

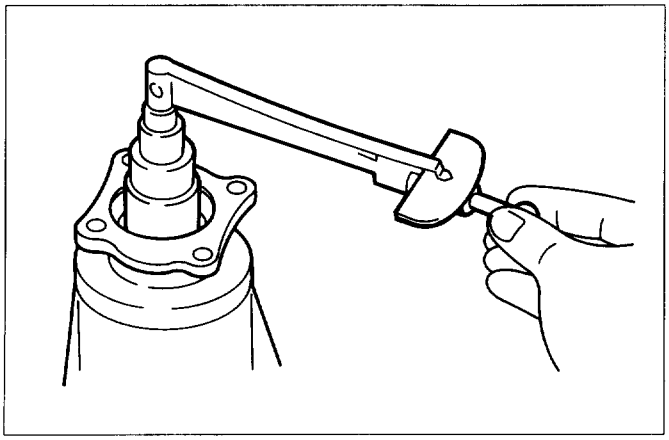

Fig. 4C-46

Using special tool, stake the flange nut at two points (Fig. 4C-47).
Punch: J-39209

NOTE:
- When staking, be sure to turn the nut to insure that there is no change in bearing preload.
- Make sure of preload again as instructed in 3).

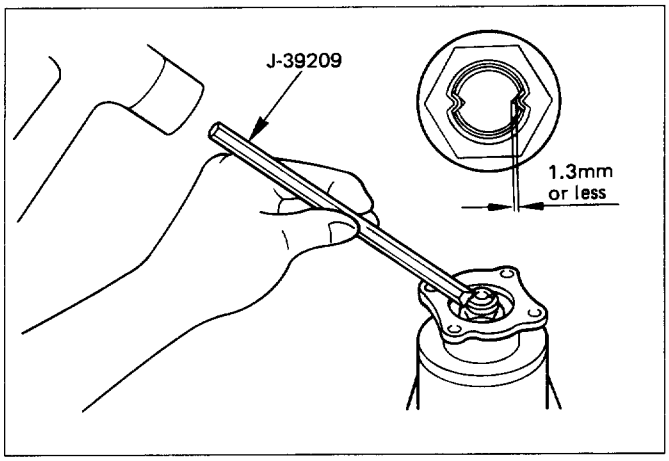

Fig. 4C-47

9. Adjust shim

1) Attach the side bearing to the differential assembly without shims. Support the opposite side using a pilot to prevent bearing damage (Fig. 4C-48).
   ① Installer: J-24244
   ② Drive handle: J-8092
   ③ Pilot: J-8107-2

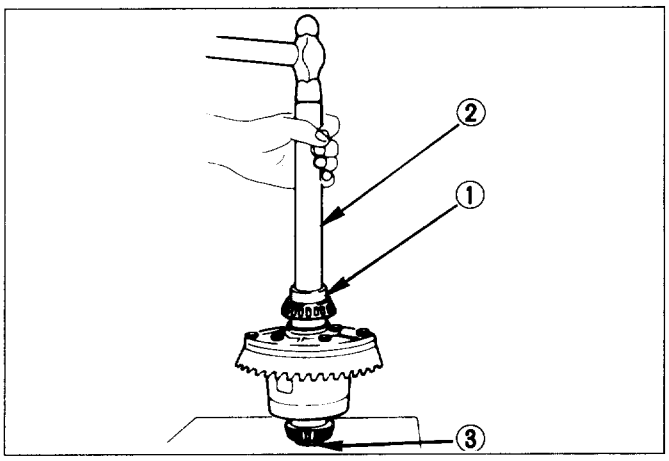

Fig. 4C-48

2) Insert the differential cage assembly with bearing outer races into the side bearing bores of the carrier (Fig. 4C-49).

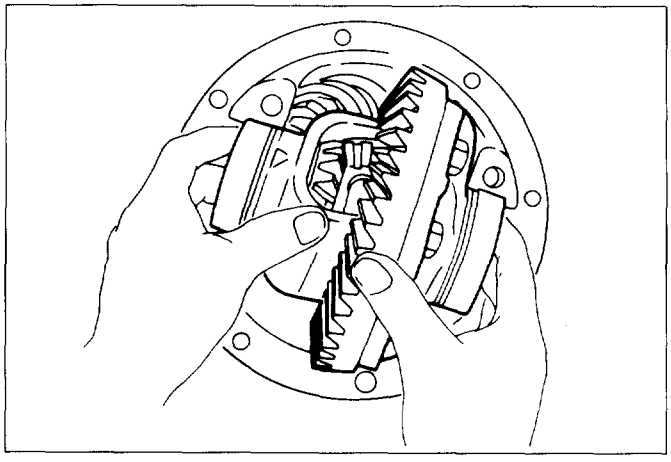

Fig. 4C-49

3) Using two sets of feeler gauges, insert a feeler stock of sufficient thickness between each bearing outer race and the carrier to remove all end play. Make certain the feeler stock is pushed to the bottom of the bearing bores. Mount the dial indicator on the carrier so that the indicator stem is at right angles to a tooth on the ring gear (Fig. 4C-50).
Dial indicator: J-8001

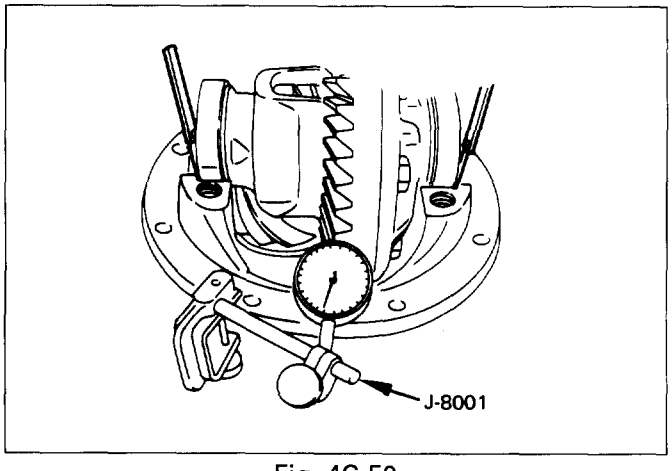

Fig. 4C-50

4) Adjust feeler gauge thickness from side to side until ring gear backlash is in the specified range (Fig. 4C-51).

Backlash mm (in)	0.13 - 0.18 (0.005 -0.007)

With zero end play and correct backlash established, remove the feeler gauge packs, determine the thickness of the shims required and add 0.05 mm (0.002 in) to each shim pack to provide side bearing preload. Always use new shims.

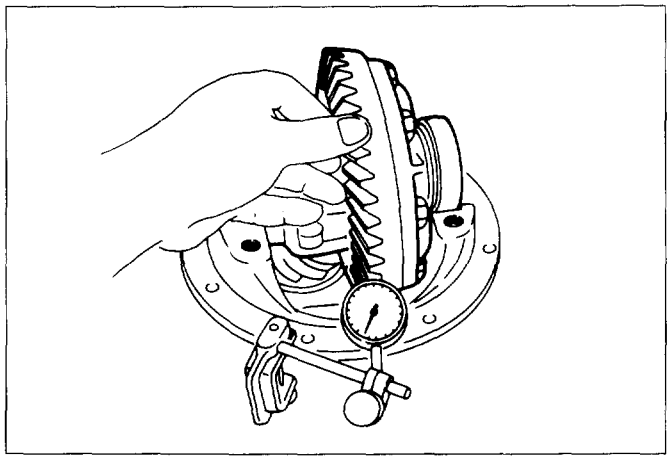

Fig. 4C-51

5) Remove side bearing (Fig. 4C-52).
Remover: J-22888
Pilot: J-8107-2

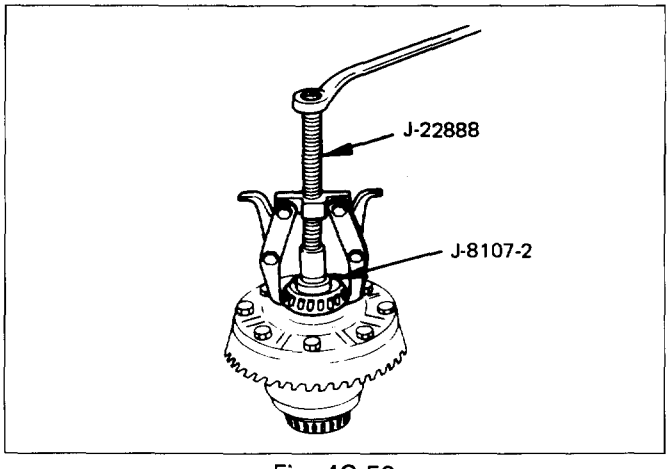

Fig. 4C-52

8. Side bearing

- Install the side bearings together with the selected shims (Fig. 4C-53).
  ① Installer: J-24244
  ② Drive handle: J-8092
  ③ Pilot: J-8107-2

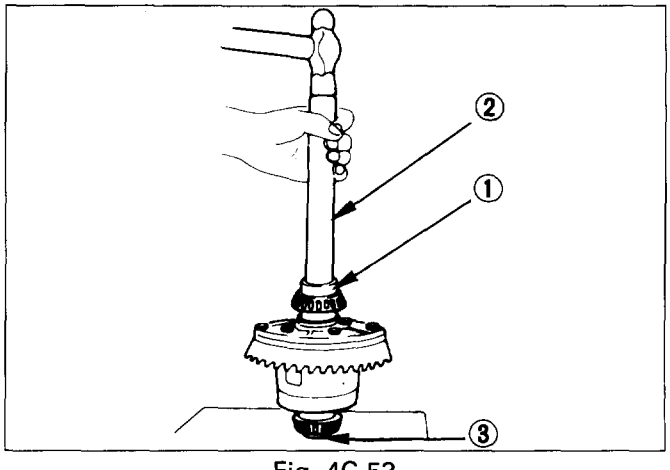

Fig. 4C-53

7. **Side bearing outer race**
6. **Differential cage assembly**
5. **Bearing cap**
   - Align the setting marks applied at disassembly (Fig. 4C-54).

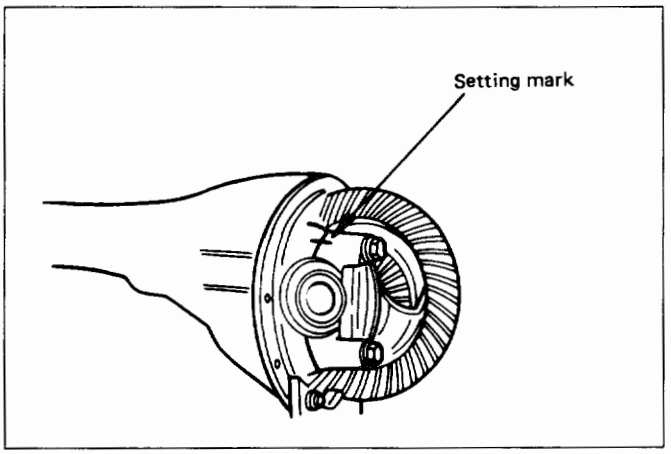

Fig. 4C-54

4. **Bolt (Fig. 4C-55)**
   - Tighten the bolt to the specified torque.

Torque N·m (lb·ft)	98 (72)

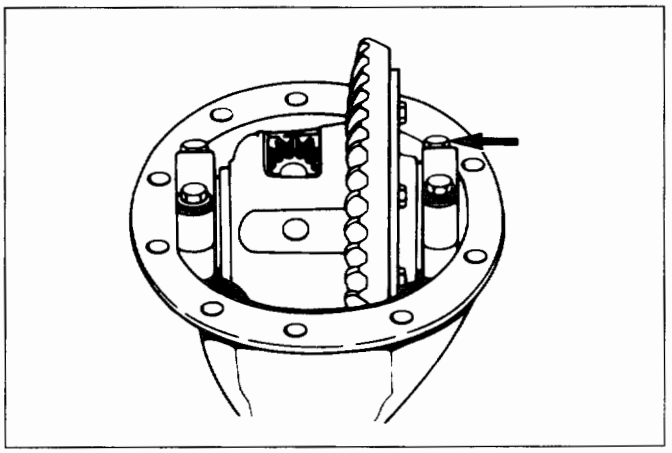

Fig. 4C-55

- Measure the amount of run-out of the ring gear at its rear face (Fig. 4C-56).

mm (in)

Standard	Limit
0.02 (0.001)	0.05 (0.002)

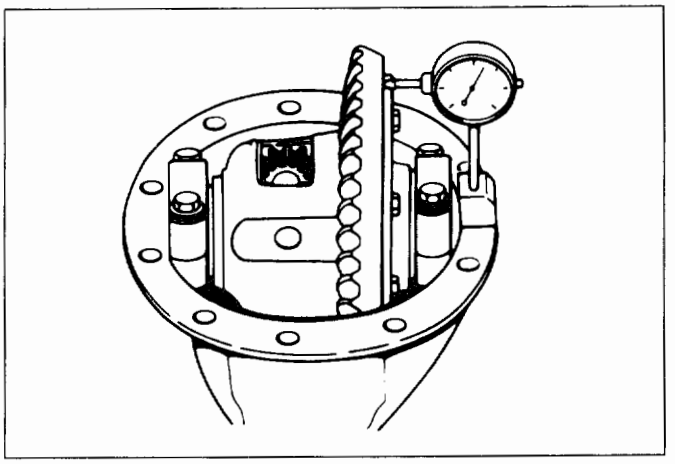

Fig. 4C-56

Gear Tooth Contact Pattern Check and Adjustment

- Apply a thin coat of prussian blue or equivalent to the faces of the 7-8 teeth of the ring gear. Check the impression of contact on the ring gear teeth and make necessary adjustment as described in Fig. 4C-55 if the contact is abnormal (Fig. 4C-57, Fig. 4C-58).

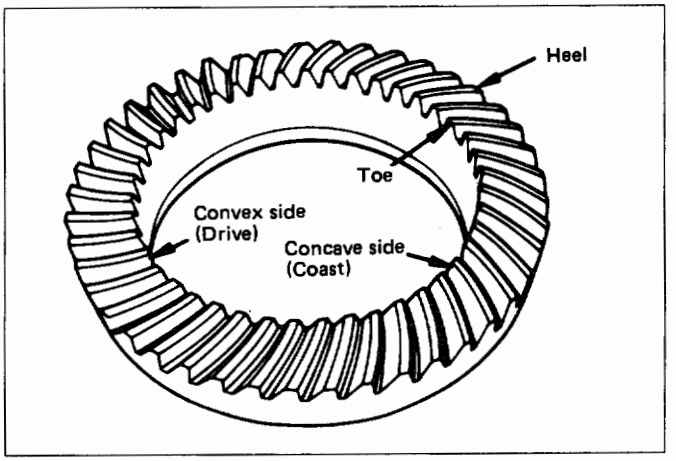

Fig. 4C-57

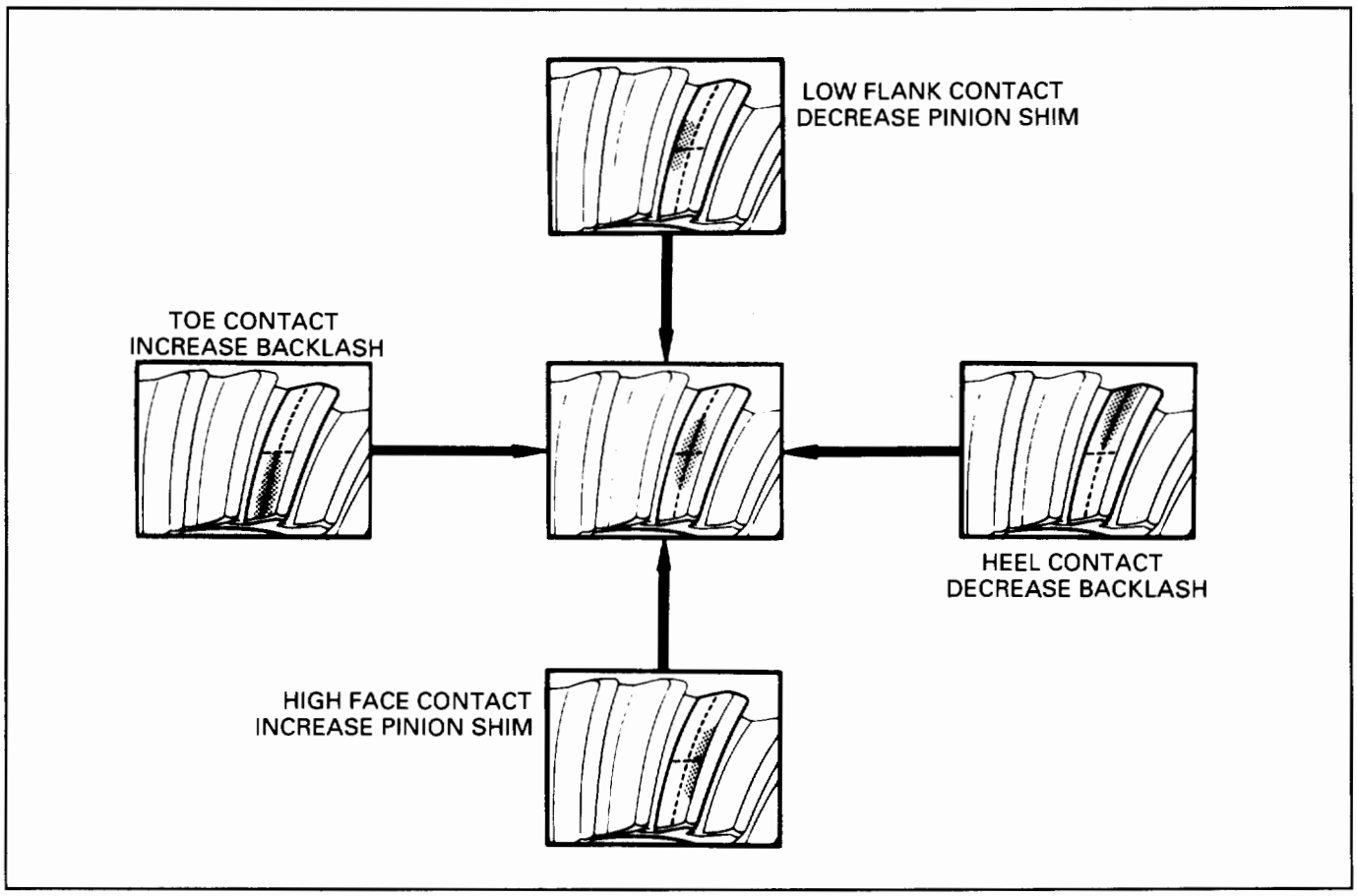

Fig. 4C-58

3. Axle case

2. Differential assembly

1) Clean the faces of the front axle case and differential carrier.

Apply Three Bond TB1215 or equivalent to the sealing side of the axle case and the carrier.

2) Attach the differential case and the carrier assembly to the front axle case and tighten the nuts and bolts.

The axle case bolt is used for drainage (Fig. 4C-59).

Torque N·m (lb·ft)	25 (19)

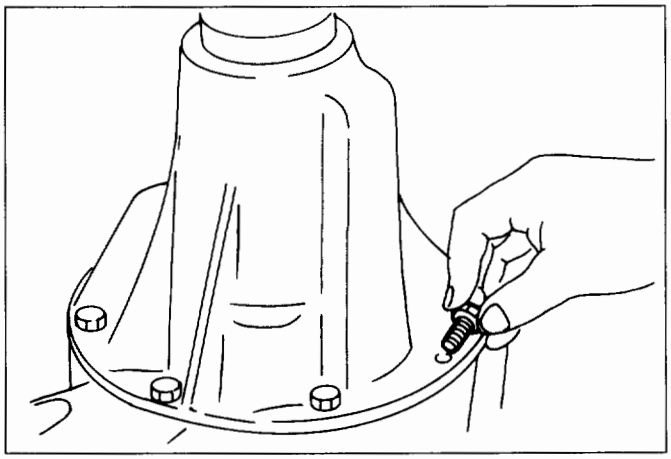

Fig. 4C59

3) Fill the axle case with hypoid gear lubricant, to just below the filler hole.

Lubricant capacity

Lubricant capacity liter (US GAL)	1.5 (0.4)

1. Bolt

DIFFERENTIAL CAGE ASSEMBLY

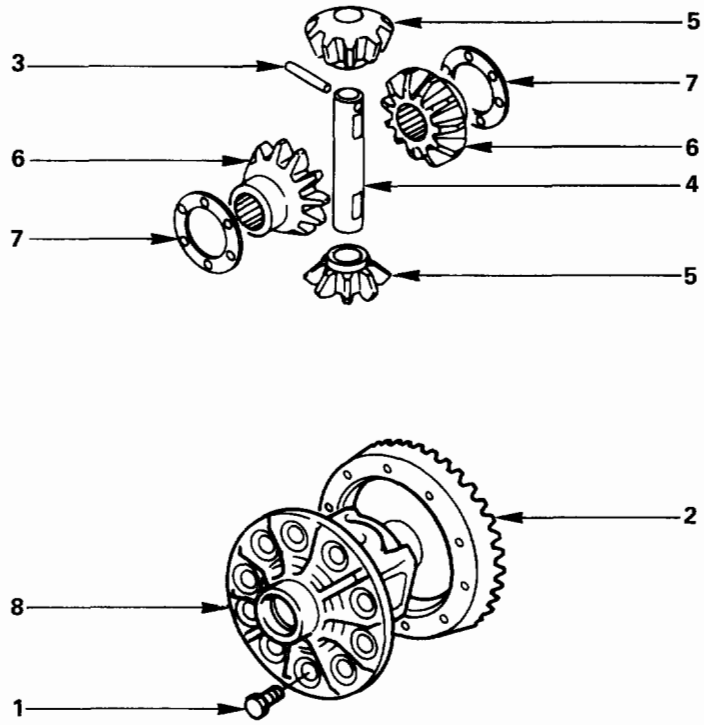

Disassembly steps
1. Bolt
2. Ring gear
3. Lock pin
4. Cross pin
5. Pinion gear
6. Side gear
7. Thrust washer
8. Differential cage

Reassembly steps
To reassemble, follow the disassembly steps in the reverse order.

Fig. 4C-60

DISASSEMBLY

1. **Bolt**
2. **Ring gear**
3. **Lock pin**
   - Break staking on the lock pin, using a 5 mm (0.20 in) diameter drill (Fig. 4C-61).

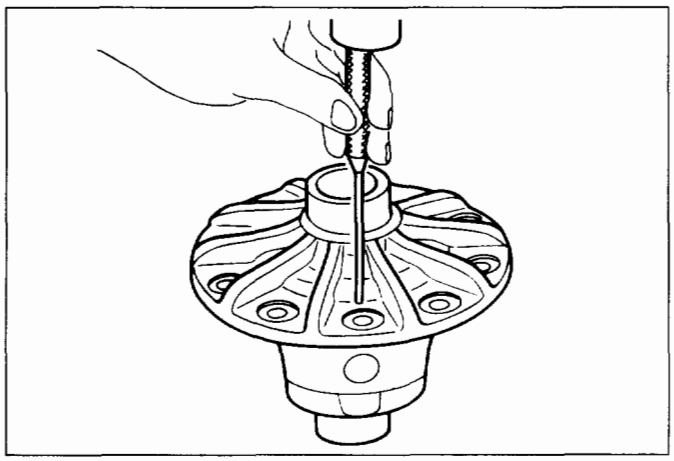

Fig. 4C-61

4. **Cross pin**
   - Remove the cross pin, using a soft metal rod and a hammer (Fig. 4C-62).

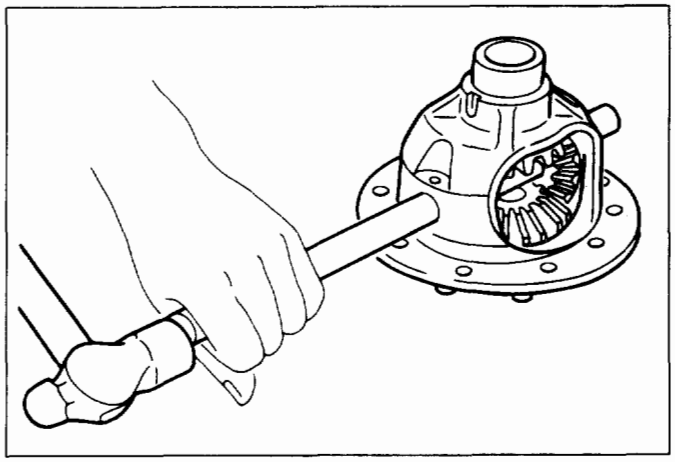

Fig. 4C-62

5. **Pinion gear**
6. **Side gear**
7. **Thrust washer**
8. **Differential cage**

INSPECTION AND REPAIR

Make necessary correction or parts replacement if wear, damage, corrosion or any other abnormal condition are found through inspection.
Check the following parts.

- Ring gear, pinion gear
- Bearing
- Side gear, pinion gear, cross pin
- Differential cage, carrier
- Thrust washer
- Oil seal

Ring gear replacement

1) The ring gear should always be replaced with the drive pinion as a set.
2) Clean the ring gear threaded holes to remove the locking agent.
3) When installing the ring gear, apply LOCTITE 271 or equivalent to all the threaded area and half of the unthreaded area of the bolt.
4) Discard used bolts and install new ones.

Torque N·m (lb·ft)	108 (80)

5) Tighten the fixing bolts in a diagonal sequence as illustrated (Fig. 4C-63).

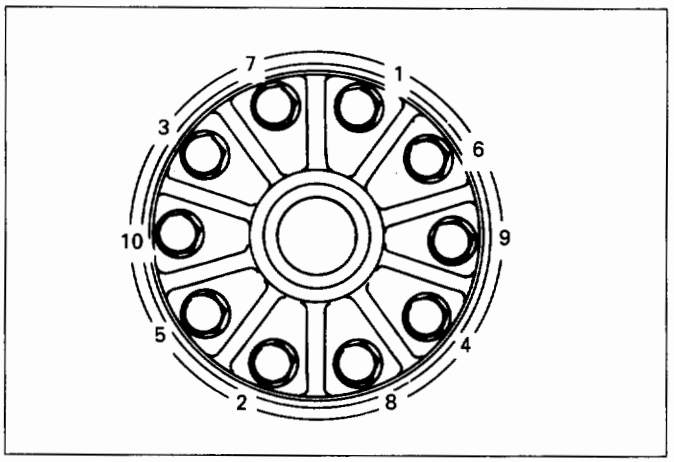

Fig. 4C-63

Clearance between the differential pinion and the cross pin measurement (Fig. 4C-64).

mm (in)

Standard	Limit
0.06 - 0.12 (0.002 - 0.005)	0.2 (0.008)

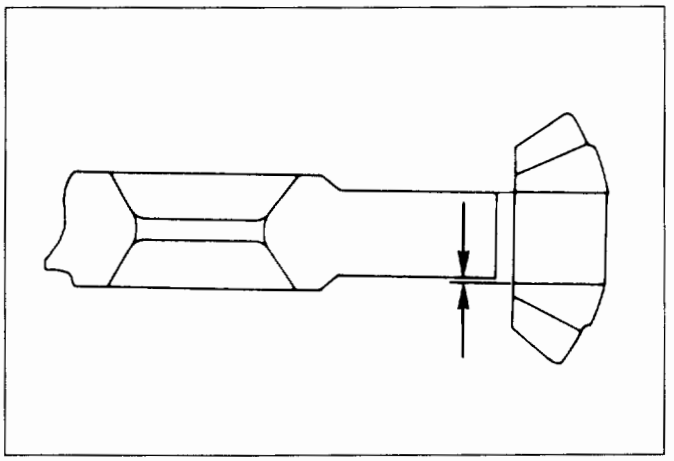

Fig. 4C-64

Clearance between the side gear and the differential box (Fig. 4C-65)

mm (in)

Standard	Limit
0.03 - 0.10 (0.001 - 0.004)	0.15 (0.006)

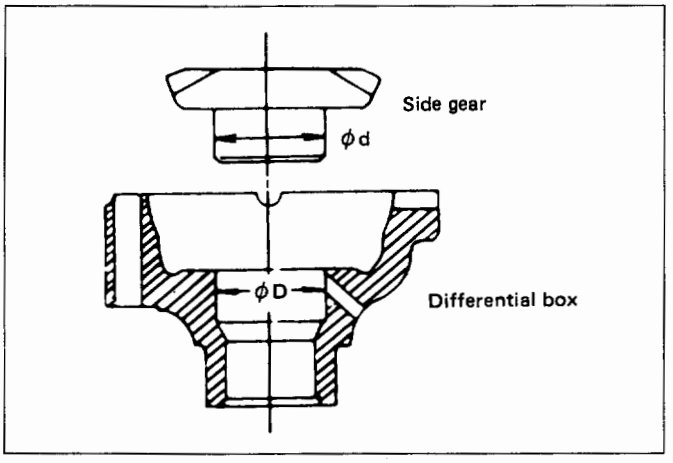

Fig. 4C-65

Play in splines between the side gear and the axle shaft (Fig. 4C-66)

mm (in)

Standard	Limit
0.08 - 0.36 (0.003 - 0.014)	0.5 (0.02)

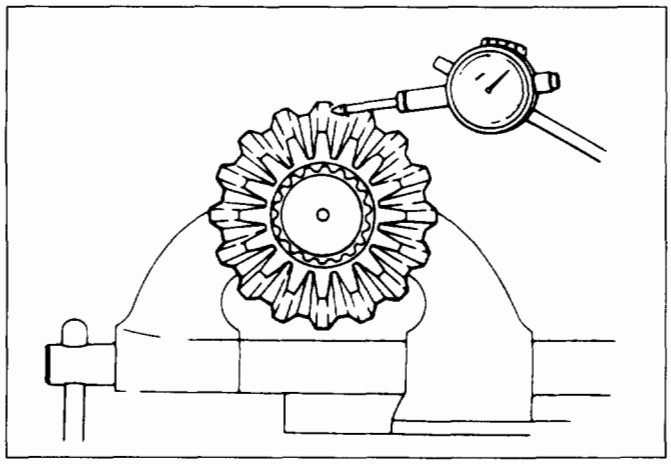

Fig. 4C-66

REASSEMBLY

8. Differential cage

7. Thrust washer

6. Side gear

5. Pinion gear

- Install the pinion gear by engaging it with the side gears while turning both pinion gears simultaneously in the same direction (Fig. 4C-67).

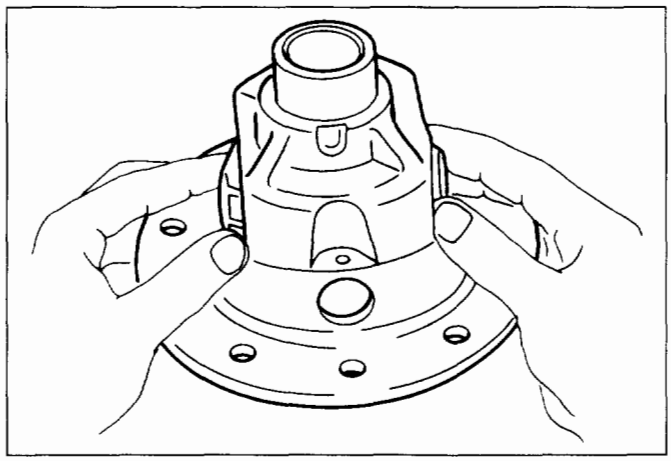

Fig. 4C-67

4. Cross pin

1) Be sure to install the cross pin so that it is in alignment with the lock pin hole in the differential cage (Fig. 4C-68).

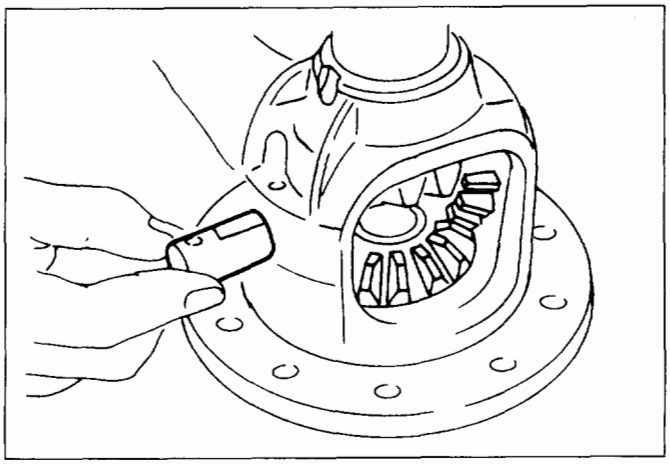

Fig. 4C-68

2) Adjust the backlash between the side gear and the pinion gear (Fig. 4C-69).

Backlash mm (in)	0.03 - 0.08 (0.001 - 0.003)

Thickness of thrust washers available mm (in)
1.00, 1.05, 1.10 (0.039, 0.041, 0.043)

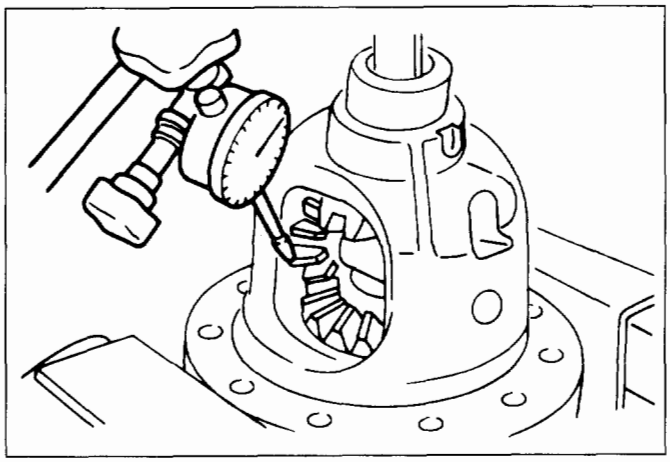

Fig. 4C-69

3. Lock pin

- After lock pin installation, stake the cage to secure the lock pin (Fig. 4C-70).

2. Ring gear

- Clean the ring gear threaded holes to remove the locking agent.
- When installing the ring gear, apply LOCTITE 271 or equivalent to all the threaded area and half of the unthreaded area of the bolt.

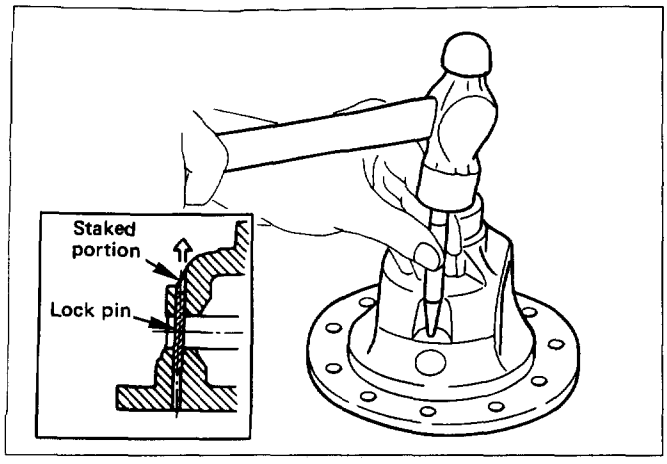

Fig. 4C-70

1. **Bolt**
   - Tighten the bolts in diagonal sequence as illustrated (Fig. 4C-71).

Torque N·m (lb·ft)	108 (80)

NOTE:
Discard used bolts and install new ones.

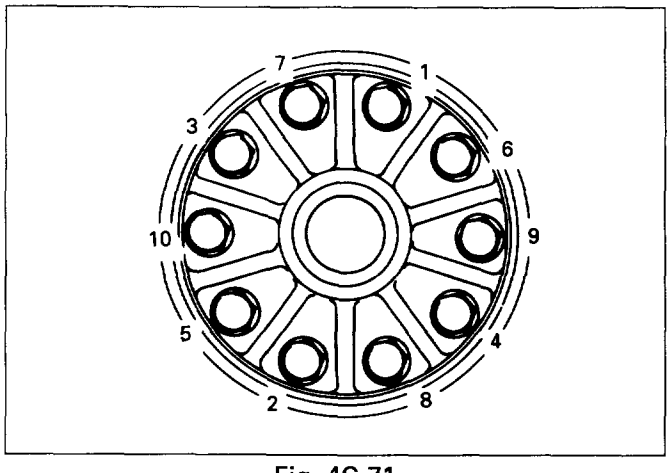

Fig. 4C-71

FRONT HUB AND DISC (4WD Model with Automatic Locking Hub)

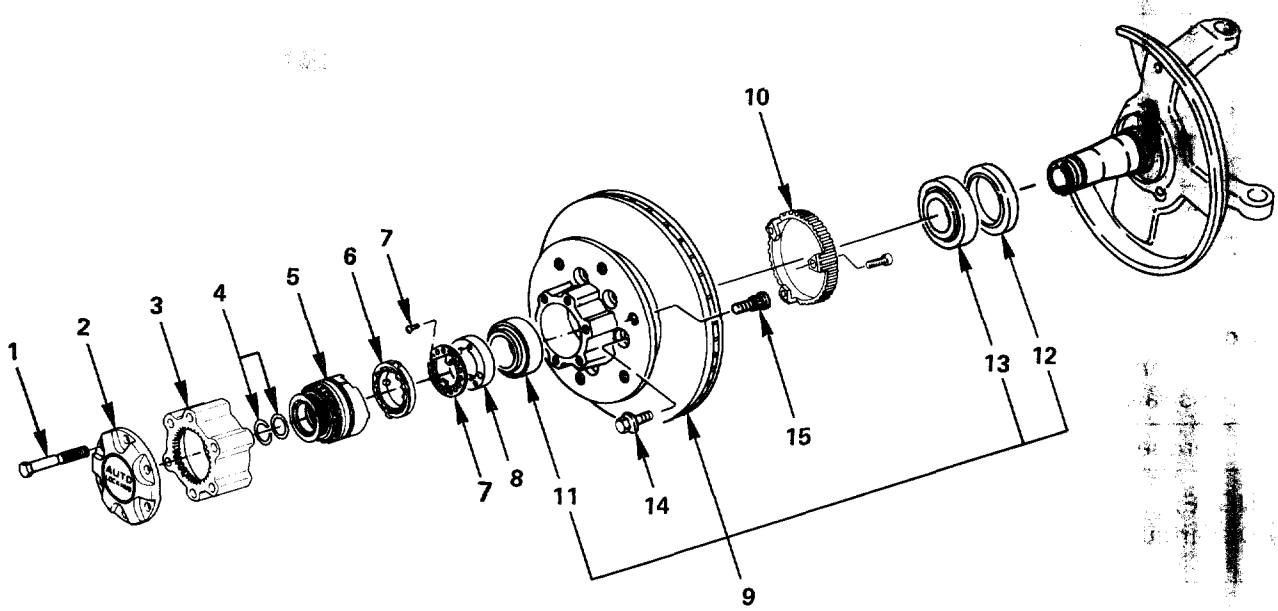

Disassembly steps

1. Bolt
2. Hub cap
3. Housing
4. Snap ring and shim
5. Drive clutch assembly
6. Inner cam assembly
7. Lock washer and lock screw
8. Hub nut
9. Hub and disc assembly
10. ABS sensor ring
11. Outer bearing outer race
12. Oil seal
13. Inner bearing outer race
14. Bolt
15. Wheel pin

Reassembly steps

15. Wheel pin
14. Bolt
13. Inner bearing outer race
11. Outer bearing outer race
12. Oil seal
10. ABS sensor ring
9. Hub and disc assembly
8. Hub nut
7. Lock washer and lock screw
6. Inner cam assembly
5. Drive clutch assembly
4. Snap ring and shim
3. Housing
2. Hub cap
1. Bolt

Fig. 4C-72

DISASSEMBLY

- Shift the transfer lever to the "2H" position and move the vehicle forward and rearward about one meter.
- Remove the 14mm hex bolts.
- Before disassembly, jack up the front of vehicle and support frame with jack stands.
- Remove the disc brake caliper assembly and hang it on the frame with wires. Refer to Section 5A2 "DISC BRAKES".

1. **Bolt (Fig. 4C-73)**

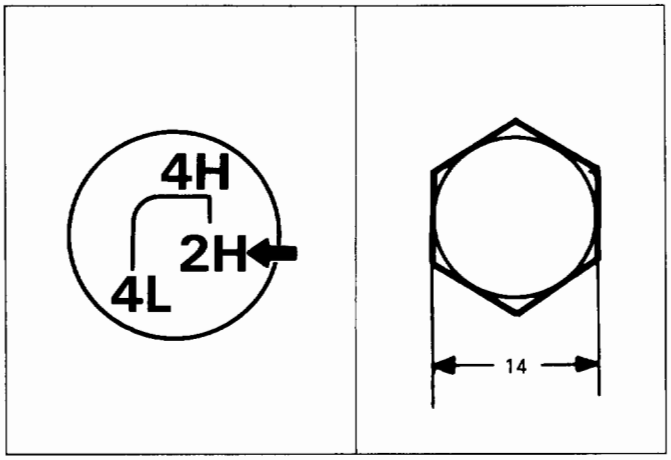

Fig. 4C-73

2. **Hub cap**
3. **Housing**
4. **Snap ring and shim**
5. **Drive clutch assembly**
6. **Inner cam assembly**
7. **Lock washer and lock screw**
8. **Hub nut (Fig. 4C-74)**

Wrench: J-36827

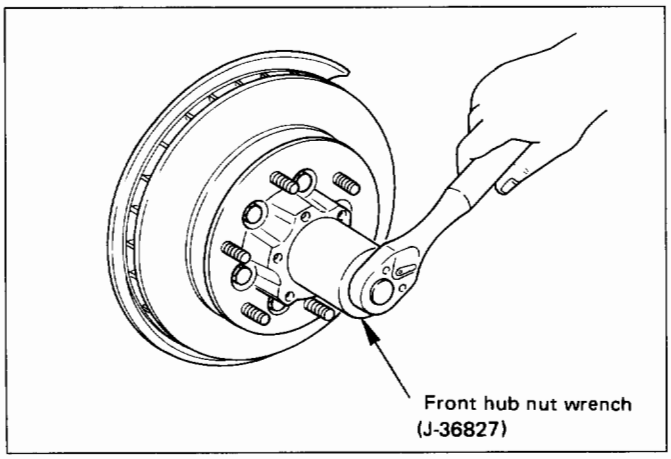

Fig. 4C-74

9. **Hub and disc assembly**
10. **ABS sensor ring (if so equipped)**
11. **Outer bearing outer race**
12. **Oil seal**
13. **Inner bearing outer race**
    1) Remove the outer bearing from the hub with fingers. The inner bearing will remain in the hub and may be removed after prying out the inner bearing lip seal assembly (Fig. 4C-75).
    2) Remove the outer race by driving out the race from the hub with a brass drift inserted behind the race in the notches in the hubs.

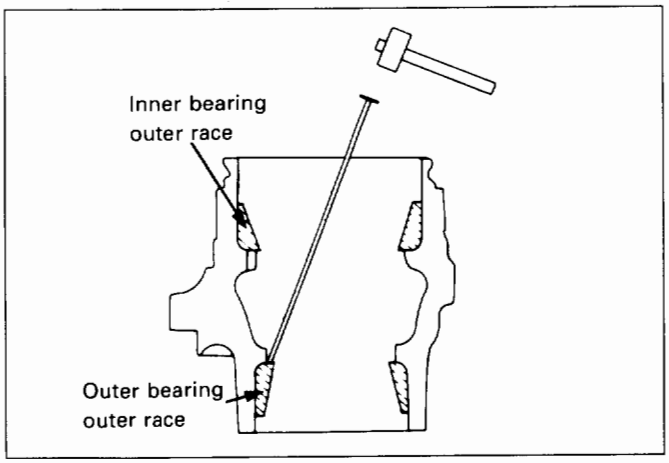

Fig. 4C-75

14. **Bolt (Fig. 4C-76)**
    - If necessary, replace the wheel pin in the following manner.
      1) Apply a scribe mark to disc to hub.
      2) Clamp the hub and disc assembly in a vise, using protective pads. Remove the 6 disc-to-hub retaining bolts.

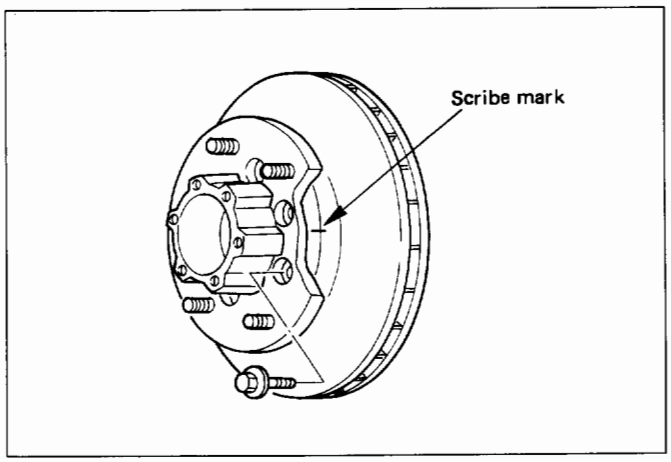

Fig. 4C-76

15. Wheel pin (Fig. 4C-77)

- Place hub on a suitable work surface and remove the wheel studs, as required, using a hammer.

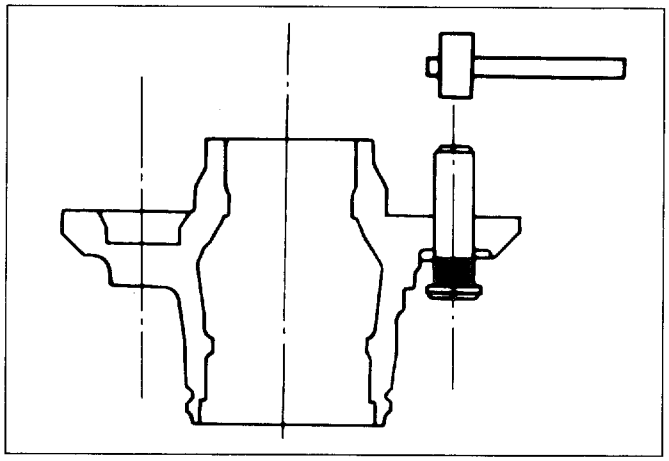

Fig. 4C-77

INSPECTION AND REPAIR

Make necessary correction or parts replacement if wear, damage, corrosion or any other abnormal condition are found through inspection.
Check the following parts.

- Hub
- Hub bearing oil seal
- Knuckle spindle
- Disc
- Caliper
- Automatic locking hubs
- ABS sensor ring

For inspection and servicing of disc caliper and related parts, refer to Section 5A2 "DISC BRAKES".

Inside diameter of housing measurement (Fig. 4C-78)

mm (in)

Standard	Limit
65.04 (2.561)	65.24 (2.568)

Inspect flange surface A and B for excessive wear.

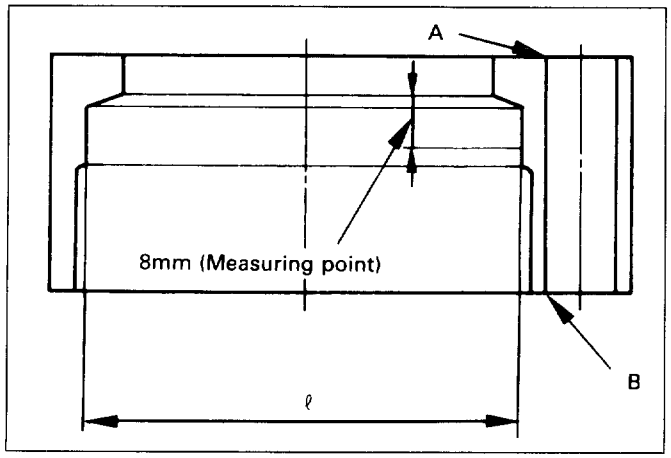

Fig. 4C-78

Drive clutch section dimensions "L" measurement (Fig. 4C-79)

mm (in)

Standard	Limit
8.2 (0.323)	7.8 (0.307)

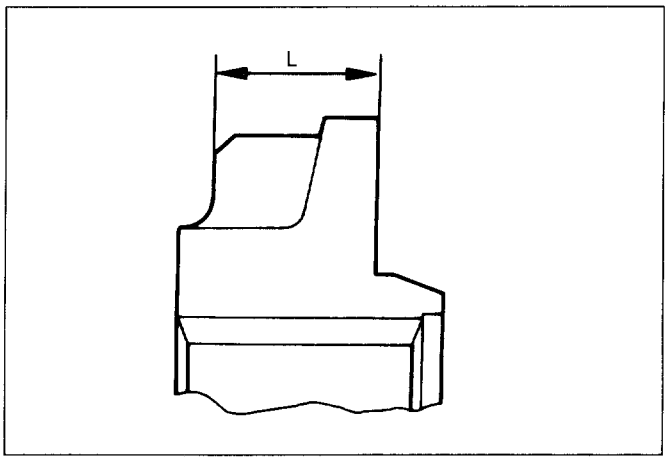

Fig. 4C-79

Hold ring sliding resistance check (Fig. 4C-80)

Check the sliding resistance along opening direction as shown in the figure.

N (lb)

Sliding Resistance	16.7 - 34.3 (3.8 - 7.7)

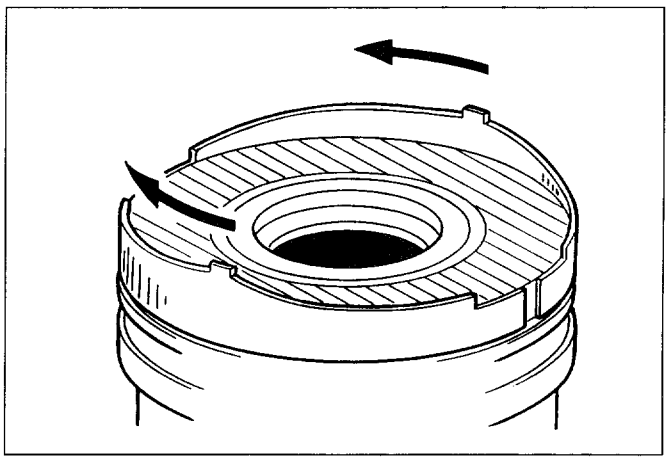

Fig. 4C-80

Holdout ring axial play of the drive clutch assembly (Fig. 4C-81).

mm (in)

Standard	Limit
0.3 (0.012) or less	0.4 (0.016)

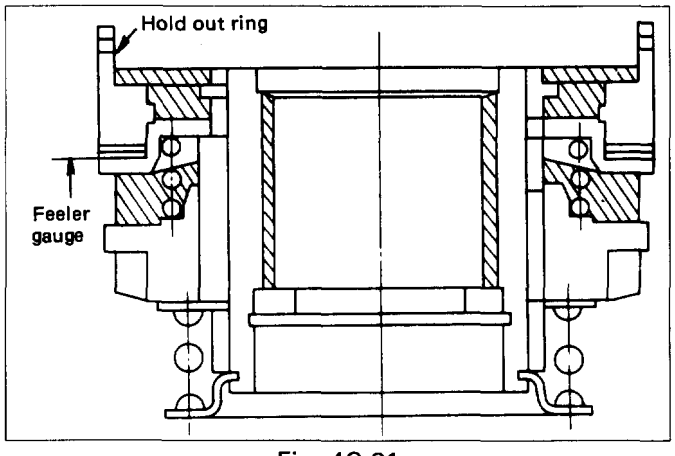

Fig. 4C-81

Outside diameter of the drive clutch assembly (D) measurement (Fig. 4C-82)

mm (in)

Standard	Limit
64.75 (2.55)	64.55 (2.54)

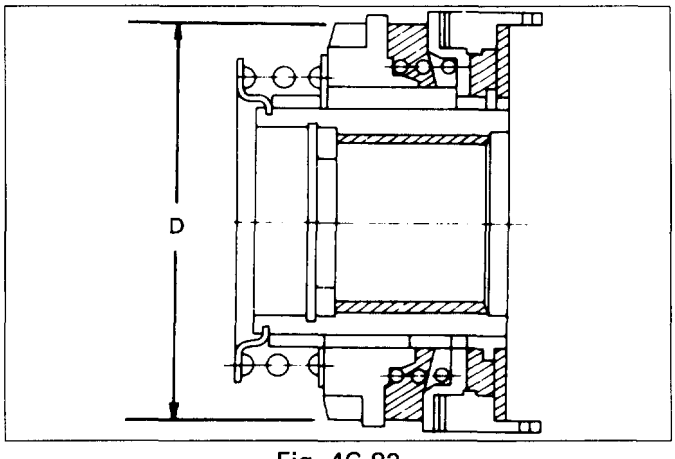

Fig. 4C-82

REASSEMBLY

15. Wheel pin (Fig. 4C-83)

1) Place the hub on a wood workbench or a block of wood approx. 6" by 6" to protect the wheel stud ends and threads.
2) Insert a wheel stud using a hammer.
   Be sure the wheel stud is started squarely and seats completely.

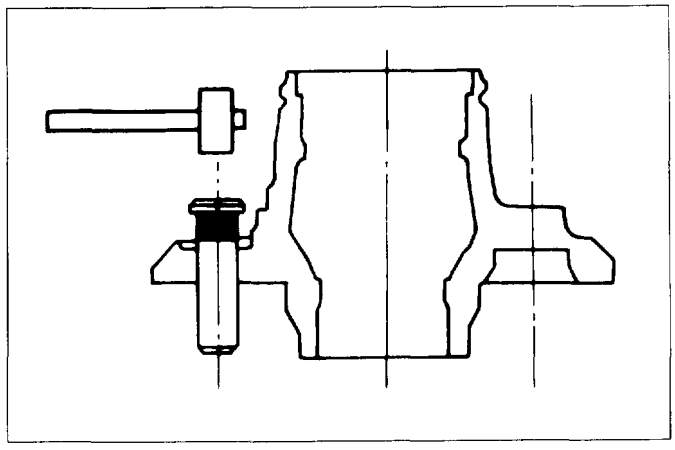

Fig. 4C-83

14. Bolt (Fig. 4C-84)

- Align scribe marks and attach the hub to the disc.

Tighten the bolts to the specified torque.

Torque N·m (lb·ft)	103 (76)

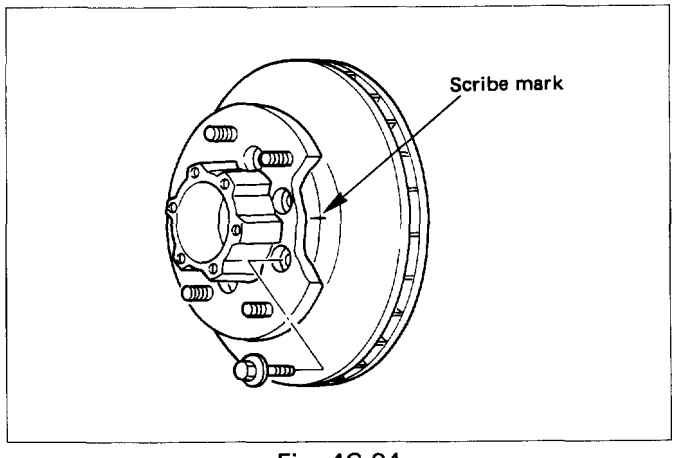

Fig. 4C-84

13. Inner bearing outer race (Fig. 4C-85)

- Install the outer race; inner bearing by driving it into the hub.
  Installer: J-36829
  Grip: J-8092

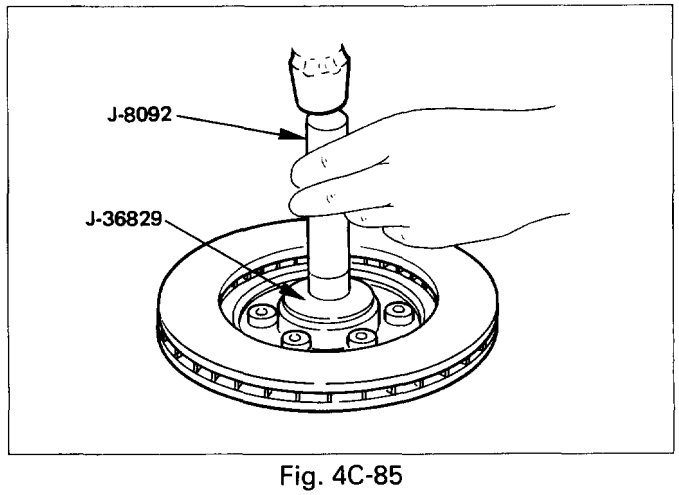

Fig. 4C-85

11. Outer bearing and outer race (Fig. 4C-86)

- Install the outer race; outer bearing by driving it into the hub.
  Installer: J-36828
  Grip: J-8092

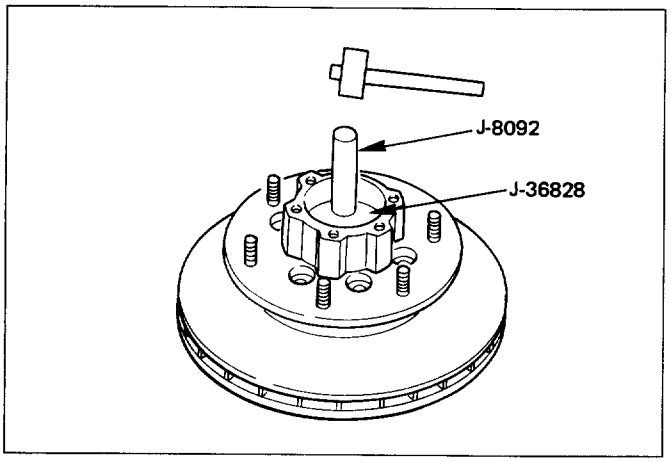

Fig. 4C-86

12. Oil seal (Fig. 4C-87)

- Place the inner bearing onto the outer race in the hub and install a new oil seal and retaining ring.
- Apply Besco L-2 or equivalent to the lip portion.
  Installer: J-36830
  Grip: J-8092

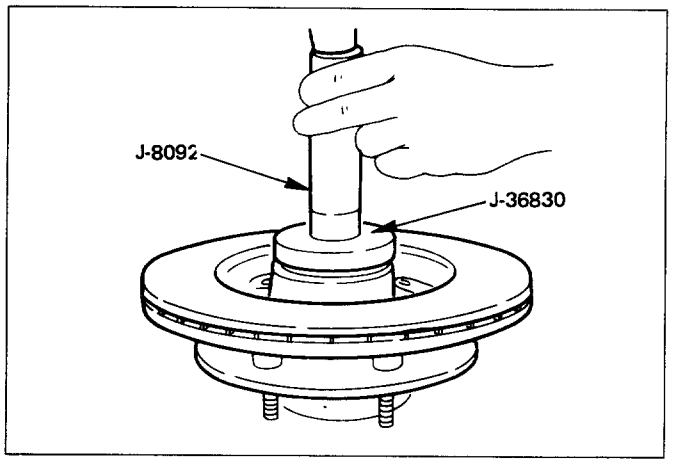

Fig. 4C-87

10. ABS sensor ring (if so equipped)

Torque N·m (lb·ft)	18 (13)

9. Hub and disc assembly (Fig. 4C-88)

1) Put grease in the hub.
2) Place Besco L-2 or equivalent to the outer and inner bearing.

	g (oz)
Hub	35 (1.23)
Outer bearing	10 (0.35)
Inner bearing	15 (0.53)

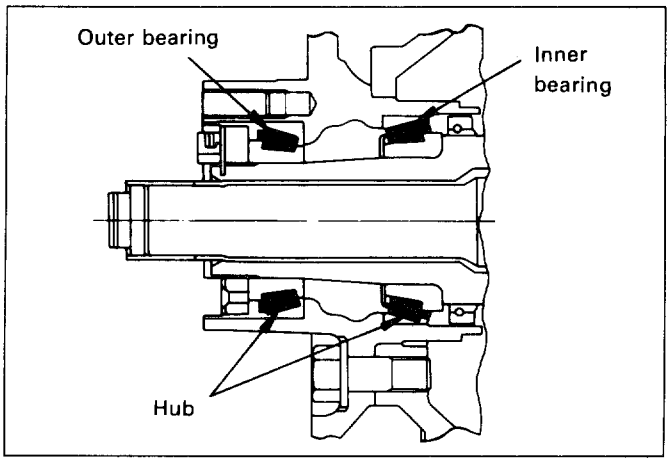

Fig. 4C-88

8. Hub nut (Fig. 4C-89)

- Install the nut with the chamfered edge of inside diameter outward.
  Wrench: J-36827

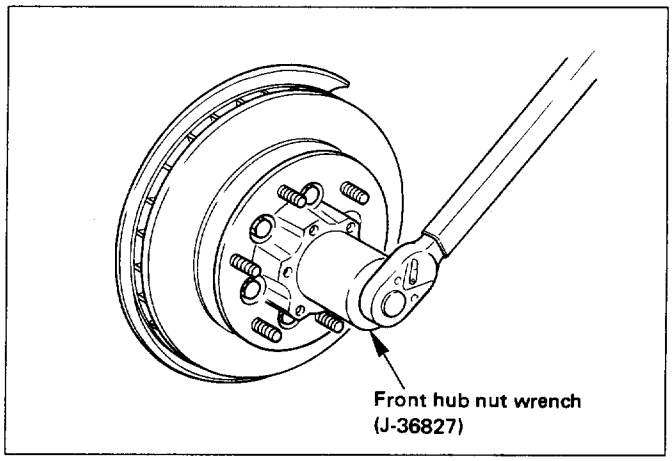

Fig. 4C-89

Preload adjustment (Fig. 4C-90)

Tighten the hub nut to 29.4 N·m (21.7 lb·ft), then loosen the nut fully.
Tighten the hub nut to reach the bearing preload given below, using a spring scale on the wheel pin.

Bearing Preload	N (lb)
New bearing and New oil seal	19.6 - 24.5 (4.4 - 5.5)
Used bearing and New oil seal	11.8 - 17.7 (2.6 - 4.0)

If the measured bearing preload is outside the specifications, adjust it by loosening or tightening the bearing nut.

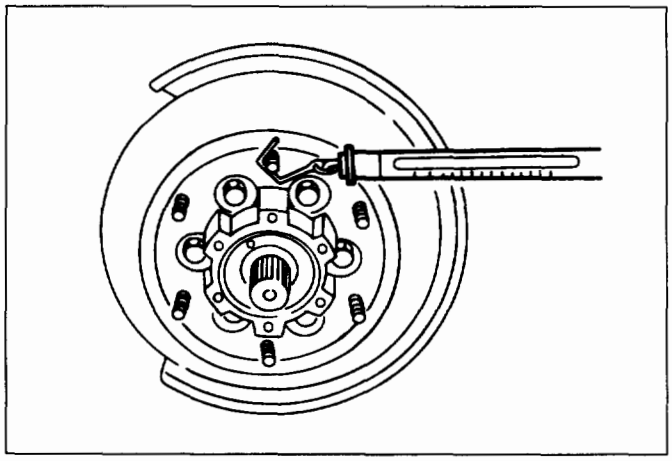

Fig. 4C-90

7. **Lock washer and lock screw (Fig. 4C-91)**
   - Turn the side with larger diameter of the tapered bore to the vehicle outer side, and attach the washer.
     If the bolt holes in the lock plate are not aligned with the corresponding holes in the nut, rotate the lock plate.
     If the bolt holes are still out of alignment, turn in the nut just enough to obtain alignment. Install the lock screw so its head is lower than the surface of the washer.

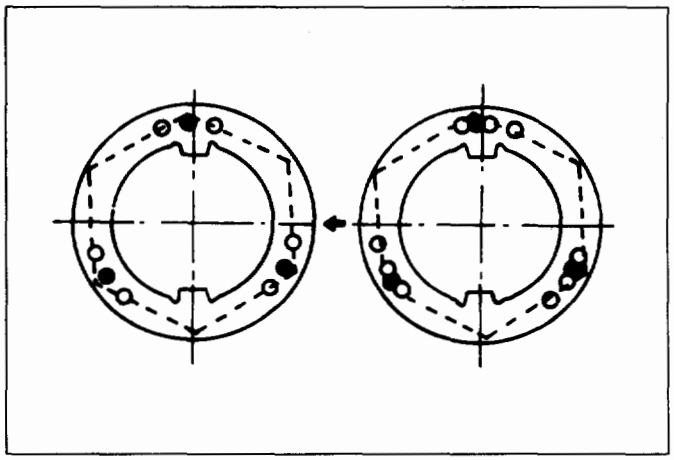

Fig. 4C-91

6. **Inner cam assembly**
   1) Before installation, make sure the transfer lever is still in "2H" position.
   2) Clean the flange surface of the hub, the thread holes, the surface of the lock washer and the spline portion of the axle shaft (Fig. 4C-92).

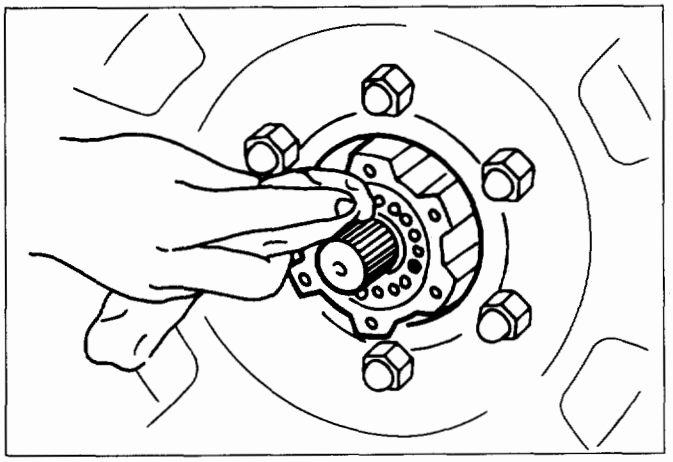

Fig. 4C-92

   3) Install the inner cam by aligning the key way with the groove in the knuckle (Fig. 4C-93).

NOTE:
The cam gear must be facing out.

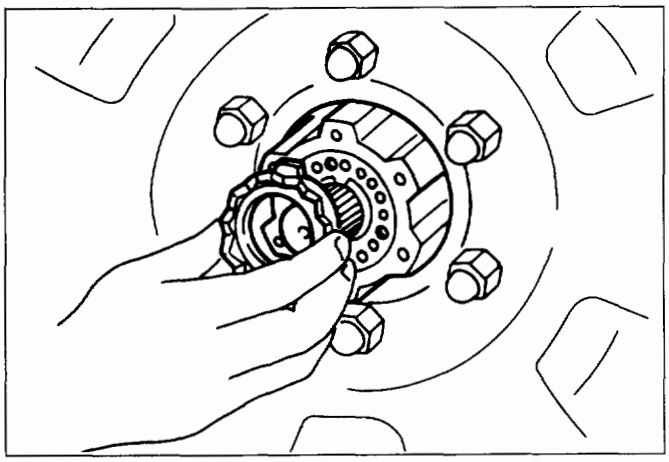

Fig. 4C-93

   - If it is difficult to install the inner cam, use the tool (installer) and a plastic hammer or the equivalent (Fig. 4C-94).
     Install the special tool.
     Use the plastic hammer to lightly tap around the special tool "A" surface as shown in the illustration.
     Installer: J-38194

NOTE:
Do not strike the inner cam gear teeth with the plastic hammer.

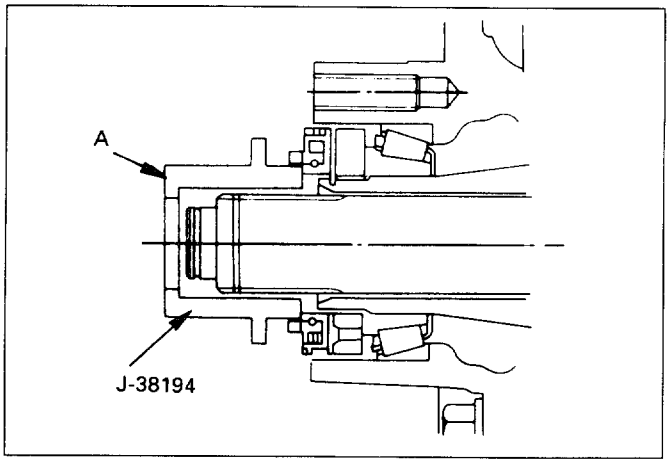

Fig. 4C-94

Shim selection

1) Lower vehicle from hoist
2) Support lower link with floor jack, placing axle in normal horizontal position (Fig. 4C-95).

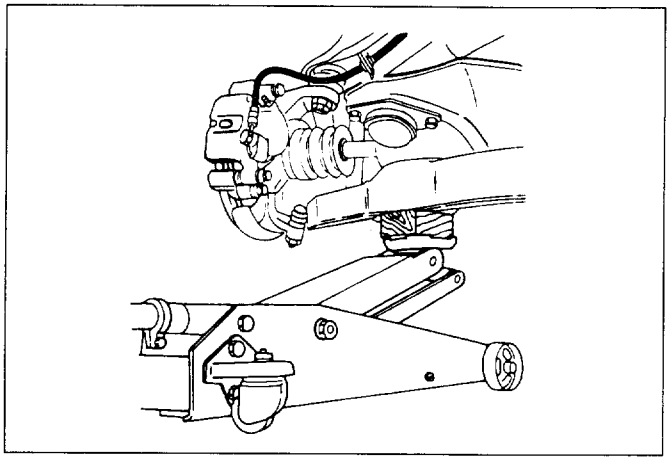

Fig. 4C-95

3) Install special tool J-36836 to axle shaft with J-36835-2 until it comes into contact with the lock washer (Fig. 4C-96).

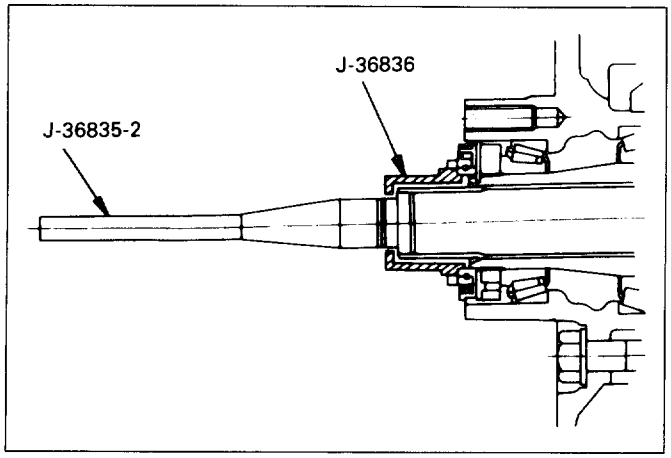

Fig. 4C-96

4) Using a feeler gauge, measure clearance "t" between the shim and the snap ring groove of the axle shaft (Fig. 4C-97).
Select and install shims so that clearance "t" is 0 to 0.1 mm (0 to 0.0039 in) (Fig. 4C-97).
Thickness shims; 0.2, 0.3, 0.5, 1.0 mm

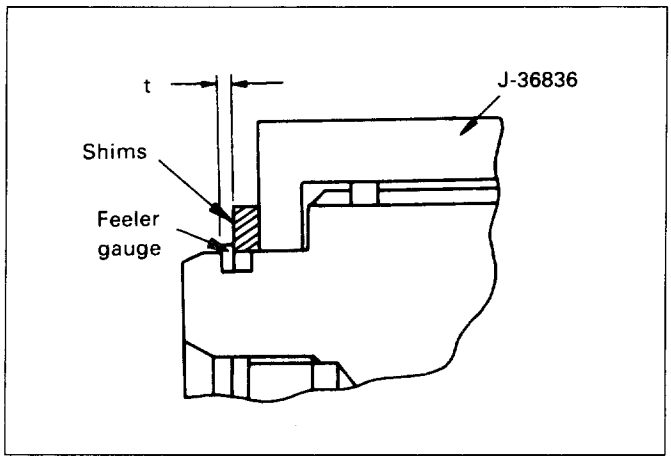

Fig. 4C-97

5) Remove shim pack and special tool J-36836, leaving the inner cam in position (Fig. 4C-99).

NOTE:

- If the inner cam is dislocated, repeat the installation steps from the beginning.
- Be sure not to remove the special tool J-36835-2.

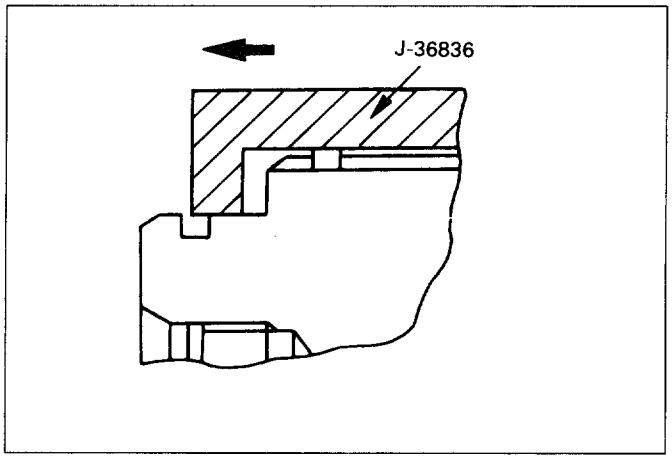

Fig. 4C-98

5. Drive clutch assembly

- Apply #8941716860, or equivalent grease to the following portions (Fig. 4C-99).
  1) Axle shaft splines

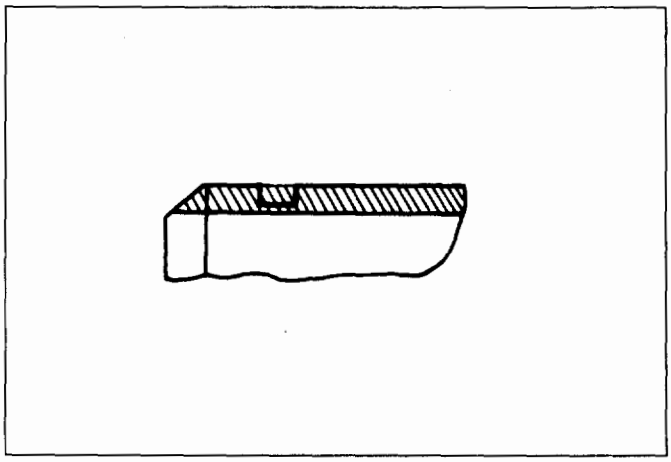

Fig. 4C-99

- "A" groove and "B" portion (Fig. 4C-100)

g (oz)

"A" groove	12 (0.42)
"B" portion	4 (0.14)

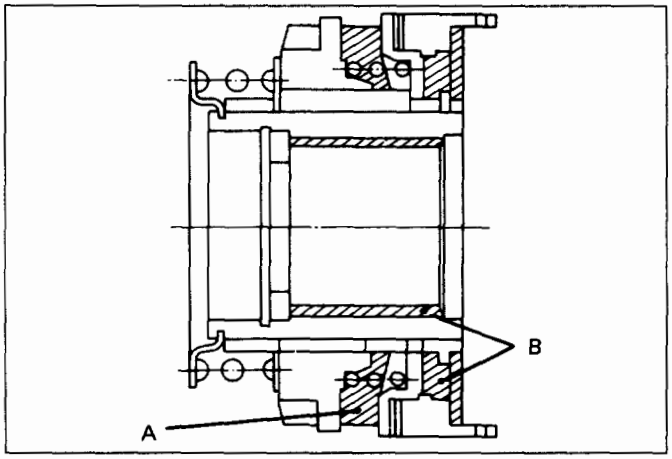

Fig. 4C-100

2) Align the cut portion of the drive clutch assembly with the concave portion of inner cam (Fig. 4C-101).
3) Engage the cam teeth of the drive clutch assembly to that of the inner cam by turning the axle shaft.

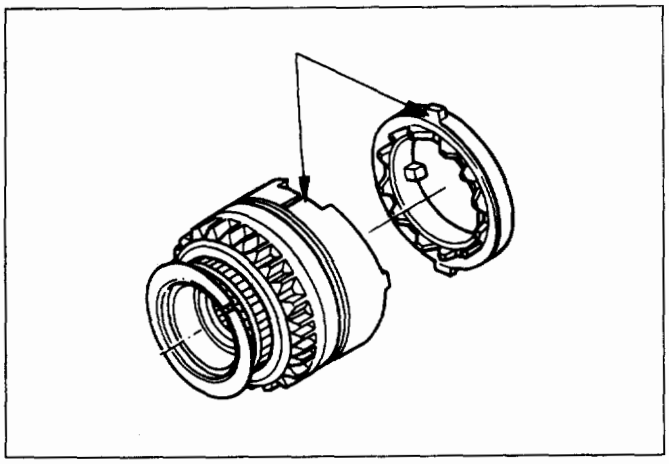

Fig. 4C-101

4. Snap ring and shim (Fig. 4C-102, 4C-103)

1) Install shims (selected above) to axle by hand.

NOTE:
Always use a new snap ring.

2) Install snap ring to tool.
3) Install tool driver J-36835-1.
4) Pull out the axle shaft fully by pulling tool J-36835-2. Install snap ring to axle by pushing on tool driver J-36835-1
5) Remove tool driver J-36835-2 from axle.

NOTE:
After installing the shims and the snap ring, check the fitting condition of the snap ring.

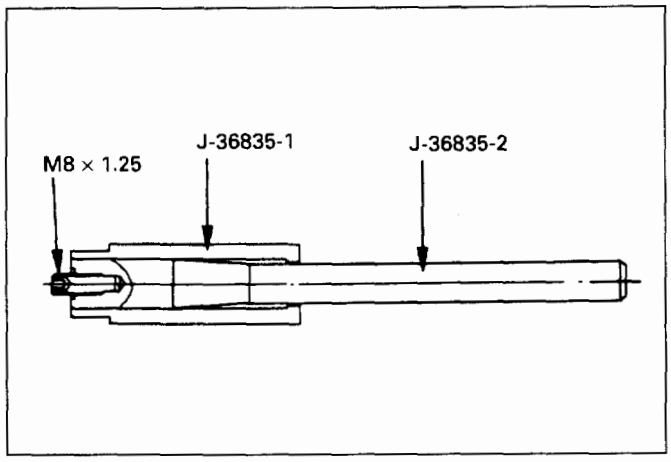

Fig. 4C-102

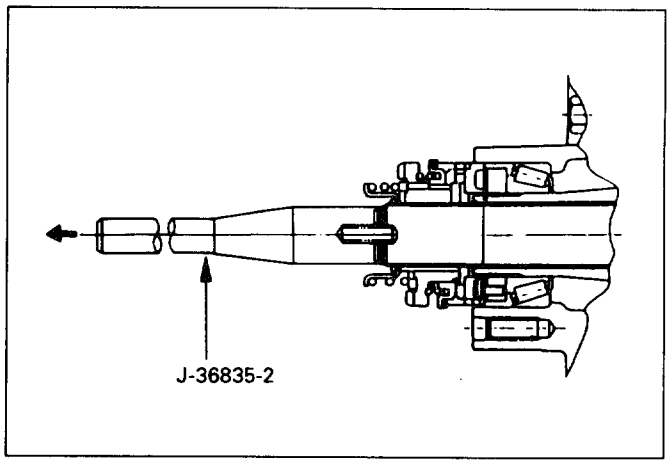

Fig. 4C-103

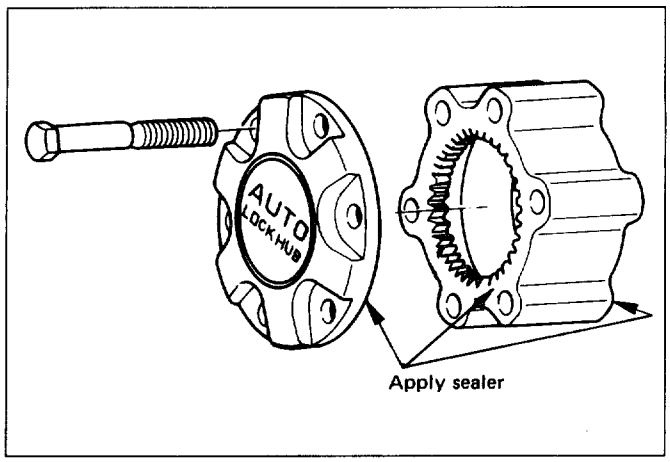

Fig. 4C-105

3. Housing

- Apply #8941716860, or equivalent grease to the inside of the housing.

2. Hub cap

- Apply #8941716860, or equivalent grease to the inside of the hub cap.
- "C" circumference and "D" portion (Fig. 4C-104).

	g (oz)
"C" circumference	8 (0.28)
"D" portion	5 (0.18)

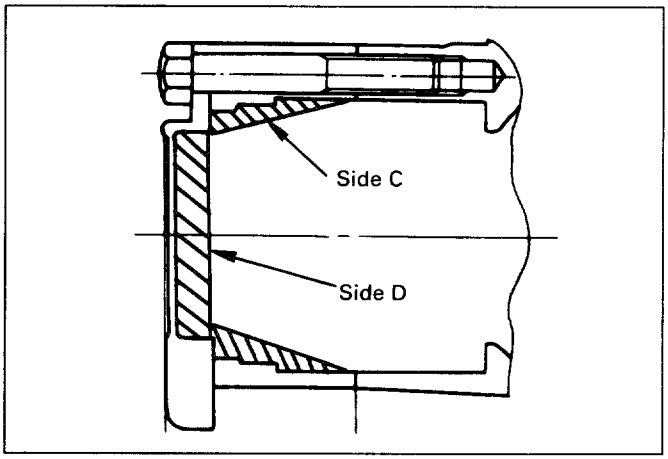

Fig. 4C-104

1. Bolt

1) Apply Loctite 515 or equivalent to the flange surface of the housing assembly.
2) Make sure that the housing assembly turns smoothly. If it turns smoothly, the shims selected above are correct.
3) Tighten the bolt to the specified torque.

Torque N·m (lb·ft)	59 (43)

MAIN DATA AND SPECIFICATIONS

GENERAL SPECIFICATIONS

FRONT AXLE AND DIFFERENTIAL
4WD

Axle tube Type		It consists of the duct, a cast iron housing and the axle tube.
Gear type		Hypoid
Gear ratio	(to 1)	4.555
Differential type		Two pinion
Oil capacity	liter (US gal)	1.5 (0.4)
Axle shaft type		Constant velocity joint (Birfield joint type and double offset joint)
Hub locking Type		Automatic locking hub

TORQUE SPECIFICATIONS

FRONT DRIVE AXLE

N·m (lb·ft)

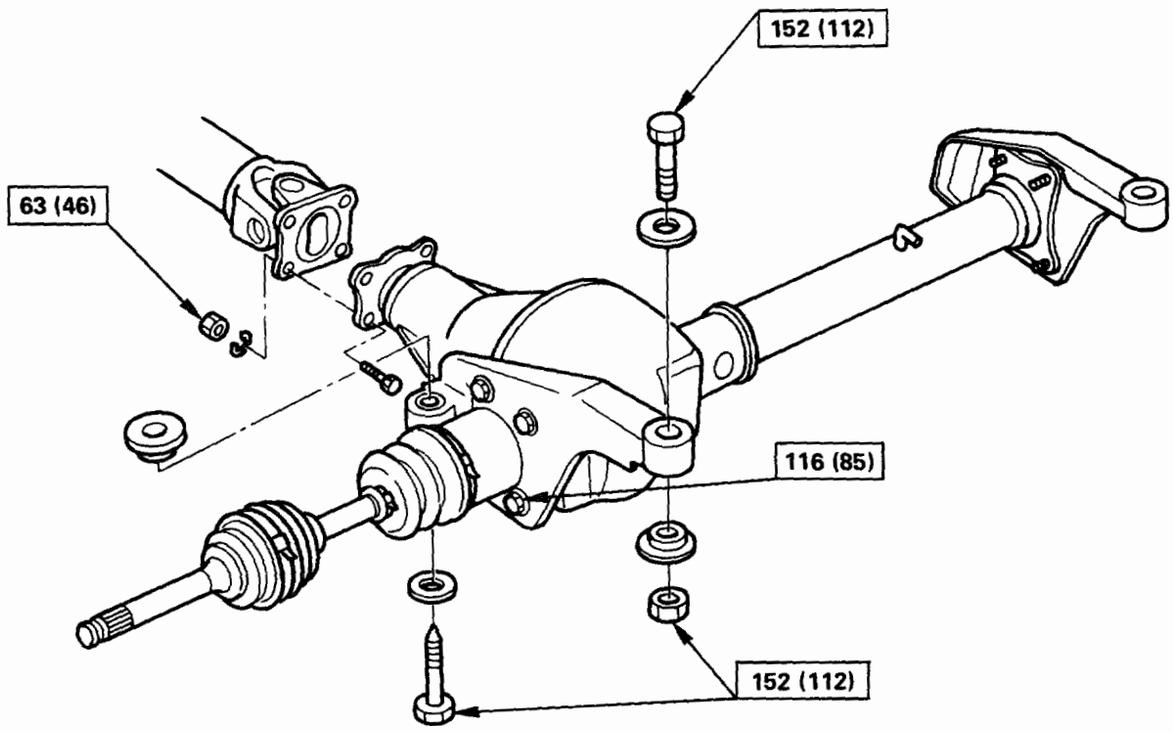

Fig. 4C-106

FRONT DIFFERENTIAL

N·m (lb·ft)

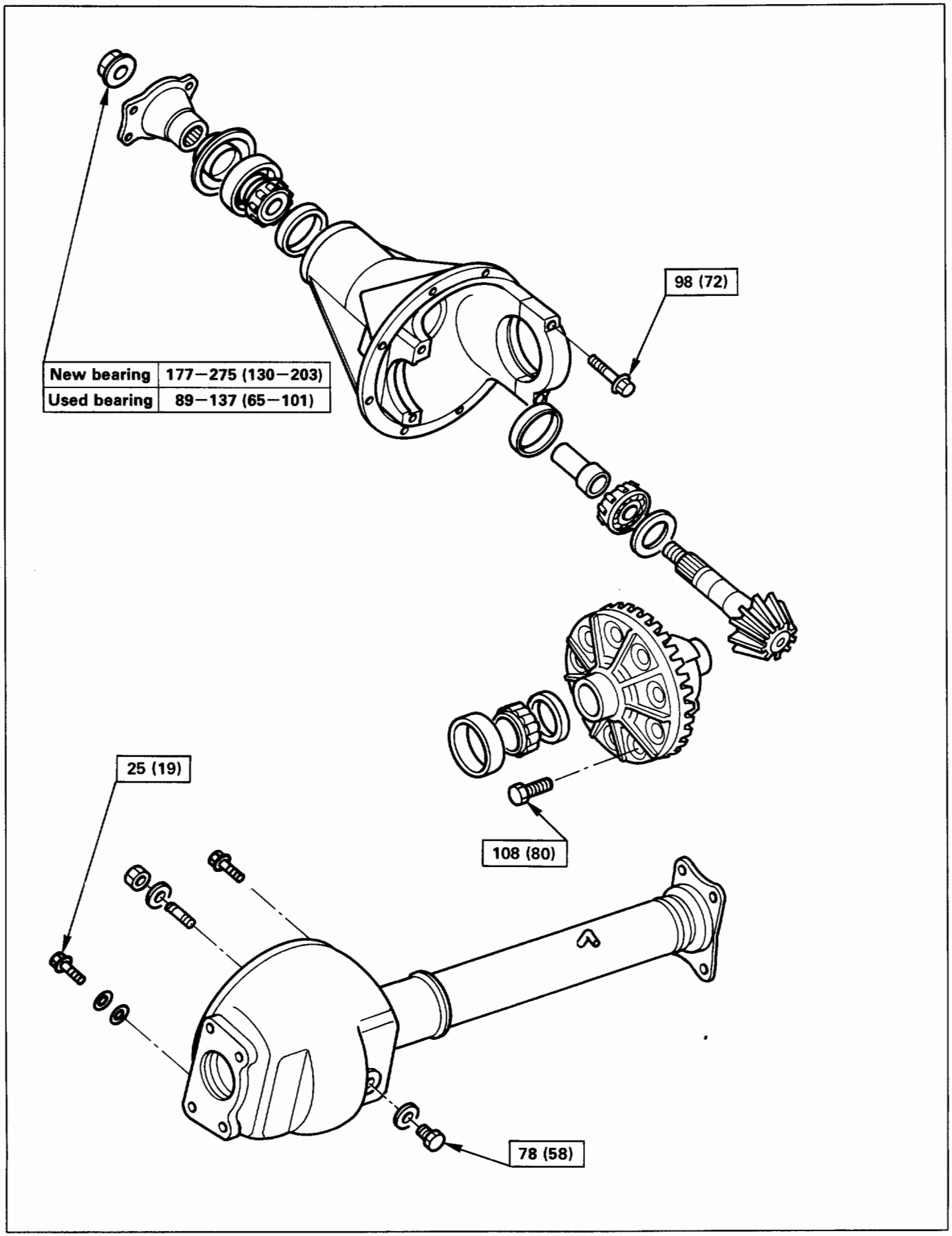

Fig. 4C-107

FREE WHEELING HUB

N·m (lb·ft)

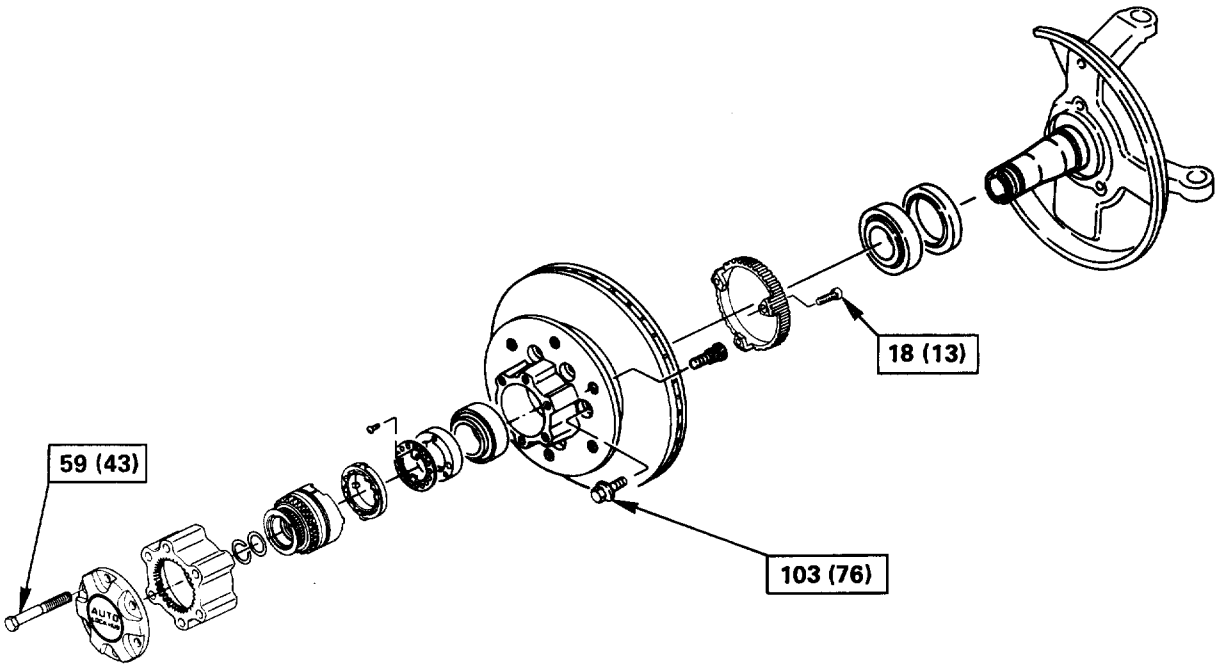

Fig. 4C-108

SPECIAL TOOLS

ILLUSTRATION	TOOL NO. TOOL NAME
	J-37221 Holder: Pinion flange
	J-24250 Installer: Oil seal
	J-39378 Remover and Installer: Front Axle mount bushing
	J-37264 Differential holding fixture (Use with J-3289-20 base)
	J-3289-20 Holding fixture base
	J-22888 Puller: Side bearing
	J-8107-2 Adapter: Side bearing plug
	J-22912-01 Separator
	J-24256 Installer: Outer bearing outer race
	J-8092 Driver handle
	J-24252 Installer: Inner bearing outer race

ILLUSTRATION	TOOL NO. TOOL NAME
	J-21777-42 Pilot
	J-23597-9 Nut and bolt
	J-23597-7 Gauge plate
	J-8001 Dial indicator
	J-23597-8 Disc
	J-23597-1 Arbor
	J-6133-01 Installer: Pinion bearing
	J-39209 Punch: End nut lock
	J-24244 Installer: Side bearing
	J-36827 Wrench: Hub nut
	J-36829 Installer: Inner bearing outer race

SPECIAL TOOLS

ILLUSTRATION	**TOOL NO.** TOOL NAME
	J-36828 Installer: Outer bearing outer race
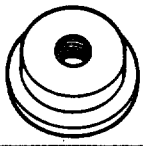	**J-36830** Installer: Oil seal
	J-38194 Inner cam installer
	J-36836 Shim gauge: Auto locking hub
	J-36835 Installer: Snap ring
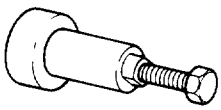	**J-39602** Remover: Outer bearing

BRAKES

CAUTION:
All brake attaching fasteners are an important attaching part in that they could affect performance of vital parts and systems, and/or could result in major repair expense. They must be replaced with one of the same part number or with an equivalent part if replacement becomes necessary. Do not use replacement parts of lesser quality or substitute design. Torque values must be used as specified during reassembly to assure proper retention of these parts.

CONTENTS

Hydraulic Brakes ..... Section 5A
Brake Booster System ..... Section 5A1
Disc Brakes ..... Section 5A2
Rear Wheel Antilock Brake System (RWAL) ..... Section 5A3
4-Wheel Antilock Brake System (ABS) ..... Section 5A4
Parking Brakes ..... Section 5C

SECTION 5A

HYDRAULIC BRAKES

CONTENTS

Brake System Diagnosis 5A- 2
Road Testing the Brakes 5A- 2
Brake Fluid Leaks 5A- 2
Warning Light Operation 5A- 2
Antilock Brake System (RWAL or ABS) . 5A- 2
Diagnosis of Brake System 5A- 3
On-Vehicle Service 5A- 5
Filling Master Cylinder Reservoir 5A- 5
Deterioration of Brake Fluid 5A- 5
Leakage of Brake Fluid 5A- 5
Bleeding Brake Hydraulic System 5A- 5
Flushing Brake Hydraulic System 5A- 6
Brake Pipes and Hoses 5A- 6
Brake Hose Inspection 5A- 6
Brake Hose Replacement 5A- 7
Brake Pipe Replacement 5A- 8
Combination Valve/P & B Valve 5A- 9
Valve Replacement 5A-10
Inspection of Brake Pad Lining 5A-11
Inspection of Brake Rotors 5A-11
Brake Pedal Assembly 5A-13
Checking Pedal Height 5A-13
Checking Pedal Travel 5A-13
Brake Pedal Replacement 5A-14
Stoplight Switch Replacement 5A-15
Master Cylinder Assembly 5A-16
General Description 5A-16
On-Vehicle Service 5A-17
Unit Repair 5A-19
Main Data and Specifications 5A-21
General Specifications 5A-21
Torque Specifications 5A-21
Special Tools 5A-22

BRAKE SYSTEM DIAGNOSIS

ROAD TESTING THE BRAKES

Brake Test

Brakes should be tested on a dry, clean, reasonably smooth and level roadway. A true test of brake performance cannot be made if the roadway is wet, greasy or covered with loose dirt so that all tires do not grip the road equally. Testing will also be adversely affected if the roadway is crowned so as to throw the weight of the vehicle toward wheels on one side or if the roadway is so rough that wheels tend to bounce. Test the brakes at different vehicle speeds with both light and heavy pedal pressure; however, avoid locking the wheels and sliding the tires. Locked wheels and sliding tires do not indicate brake efficiency, since heavily braked but turning wheels will stop the vehicle in less distance than locked wheels. More tire-to-road friction is present with a heavily braked turning tire then with a sliding tire.

The standard brake system is designed and balanced to avoid locking the wheels except at very high deceleration levels.

It is designed this way because the shortest stopping distance and best control is achieved without brake lock-up.

Because of high deceleration capability, a firmer pedal may be felt at higher deceleration levels.

External Conditions That Affect Brake Performance

1. Tires: Tires having unequal contact and grip on the road will cause unequal braking. Tires must be equally inflated, identical in size, and the tread pattern of right and left tires must be approximately equal.
2. Vehicle loading: A heavily loaded vehicle requires more braking effort.
3. Wheel Alignment: Misalignment of the wheels, particularly in regard to excessive camber and caster, will cause the brakes to pull to one side.

BRAKE FLUID LEAKS

With engine running at idle and the transmission in "Neutral", depress the brake pedal and hold a constant foot pressure on the pedal. If pedal gradually falls away with the constant pressure, the hydraulic system may be leaking.

Check the master cylinder fluid level. While a slight drop in reservoir level will result from normal lining wear, an abnormally low level in reservoir indicates a leak in the system. The hydraulic system may be leaking internally as well as externally. Refer to "Master Cylinder Inspection". Also, the system may appear to pass this test but still have slight leakage.

If fluid level is normal, check the vacuum booster push rod length. If an incorrect length push rod is found, adjust or replace the push rod. Check the brake pedal travel and the parking brake adjustment.

When checking the fluid level, the master cylinder fluid level may be low from the "MAX" mark if the front and rear linings are worn. This is not abnormal.

WARNING LIGHT OPERATION

When the ignition switch is in the START position, the "BRAKE" warning light should glow and go off when the ignition switch returns to the ON position.

The following conditions will activate the "BRAKE" light:

1. Parking brake applied. The light should be on whenever the parking brake is applied and the ignition switch is on.
2. Low fluid level. A low fluid level in the master cylinder will turn the "BRAKE" light on (Except Rear Wheel Antilock Brake System (RWAL) model).
3. During engine cranking the "BRAKE" light should remain on. This notifies the driver that the warning circuit is operating properly.
4. In the event of a front or rear system malfunction (RWAL model only).
5. In the event of RWAL malfunction (RWAL model only. Refer to Section 5A3).

ANTILOCK BRAKE SYSTEM (RWAL or ABS)

Refer to Section 5A3 or 5A4 for inspection and diagnosis procedure of the hydraulic unit.

DIAGNOSIS OF BRAKE SYSTEM

Condition	Possible Cause	Correction
Brake Pull	1. Tire inflation pressures unequal.	1. Adjust
	2. Front wheel alignment incorrect.	2. Adjust
	3. Unmatched tires on same axle.	3. Tires with approx. the same amount of tread should be used on the same axle.
	4. Restricted brake pipes or hoses.	4. Check for soft hoses and damaged lines. Replace with new hoses and new double-walled steel brake piping.
	5. Water or oil on brake pads.	5. Clean or replace.
	6. Brake pads hardened.	6. Replace.
	7. Brake pads worn excessively.	7. Replace.
	8. Brake rotor worn or scored.	8. Grind or replace.
	9. Disc brake caliper malfunctioning.	9. Clean or replace.
	10. Front hub bearing preload incorrect.	10. Adjust or replace.
	11. Loose suspension parts.	11. Check all suspension mountings.
	12. Loose calipers.	12. Check and tighten bolts to specifications.
Brake Roughness-or Chatter (Pulsates)	1. Excessive lateral runout.	1. Check per instructions. If not within specifications, replace or machine the rotor.
	2. Parallelism not within specifications.	2. Check per instructions. If not within specifications, replace or machine the rotor.
	3. Wheel bearings not adjusted.	3. Adjust wheel bearings to correct specifications.
	4. Pad reversed (steel against iron).	4. Replace brake pad and machine rotor to within specifications.
Excessive Pedal Effort	1. Malfunctioning vacuum booster.	1. Check vacuum booster operation and repair, if necessary.
	2. Partial system failure.	2. Check front and rear brake system for failure and repair. Also, check brake warning light. If a failed system is found, the light should indicate a failure.
	3. Excessively worn pad.	3. Check and replace pads in sets.
	4. Piston in caliper stuck or sluggish.	4. Remove caliper and rebuild.
	5. Fading brakes due to incorrect pad.	5. Remove and replace with original equipment pad or equivalent.
	6. Vacuum leak to vacuum booster.	4. Check for ruptured or loose hose.
	7. Check direction of check valve within vacuum hose.	5. Correct vacuum hose direction.
	8. Grease on the brake pads.	6. Replace or clean.
Excessive Brake Pedal Travel	1. Air in hydraulic circuit.	1. Bleed hydraulic circuit.
	2. Level of brake fluid in reservoir too low.	2. Replenish brake fluid reservoir to specified level and bleed hydraulic circuit as necessary.
	3. Master cylinder push rod clearance excessive.	3. Adjust.
	4. Leakage in hydraulic system.	4. Correct or replace defective parts.

Condition	Possible Cause	Correction
Brake Drag	1. Master cylinder pistons not returning correctly.	1. Adjust stop light switch and vacuum booster operating rod. If necessary, rebuild.
	2. Restricted brake pipes or hoses.	2. Check for soft hoses or damaged pipes, and replace with new hoses and new double-walled steel brake piping.
	3. Parking brake maladjusted.	3. Adjust.
	4. Parking brake lining clearance insufficient.	4. Adjust
	5. Brake pedal free play insufficient.	5. Adjust brake pedal height or power cylinder operating rod.
	6. Piston in master cylinder sticking.	6. Replace.
	7. Piston in disc brake caliper sticking.	7. Replace piston seals.
	8. Brake pads sticking in caliper.	8. Clean.
	9. Return spring weakened.	9. Replace.
	10. Praking brake binding.	10. Overhaul parking brakes and correct.
	11. Front hub bearing preload incorrect.	11. Adjust or replace.
	12. Parking brake shoes not returning.	12. Correct or replace brake back plate and brake shoe as necessary.
	13. Obstructions in hydraulic circuit.	13. Clean.
	14. Rotor warped excessively.	14. Grind or replace.
	15. Rear brake drum distorted.	15. Grind or replace.
	16. Check valve; vacuum hose faulty.	16. Replace.
	17. Parking cable sticking.	17. Clean or replace.
Grabbing or Uneven Braking Action (All conditions listed under "Pulls")	1. Malfunctioning vacuum booster.	1. Check operation and correct as necessary.
	2. Binding brake pedal mechanism.	2. Check and lubricate, if necessary.
	3. Corroded caliper assembly.	3. Clean and lubricate.
Brake Noisy	1. Brake pads worn.	1. Replace.
	2. Brake pads hardened.	2. Replace.
	3. Brake pads in poor contact with rotor.	3. Correct.
	4. Brake disc(s) warped, worn or damaged.	4. Grind or replace.
	5. Disc brake anti-squeak shims fatigued.	5. Replace.
	6. Front hub bearings loose or preload is incorrect.	6. Adjust or replace.
	7. Brake disc rusted.	7. Grind or replace.
Poor Brake Action	1. Master cylinder faulty.	1. Correct or replace.
	2. Vacuum booster faulty.	2. Correct or replace.
	3. Level of brake fluid in reservoir too low.	3. Replenish and bleed.
	4. Air in hydraulic circuit.	4. Bleed.
	5. Disc brake caliper faulty.	5. Clean or replace.
	6. Water or oil on brake pads.	6. Clean or replace.
	7. Brake pads in poor contact with rotor.	7. Correct.
	8. Brake pads worn.	8. Replace.
	9. Brake disc rusted.	9. Grind or replace.
	10. Check valve in vacuum hose faulty.	10. Correct or replace.

ON-VEHICLE SERVICE

FILLING MASTER CYLINDER RESERVOIR

CAUTION:

- Use only specified brake fluid. Do not use any fluid which contains a petroleum base. Do not use a container which has been used for petroleum based fluids or a container which is wet with water. Petroleum based fluids will cause swelling and distortion of rubber parts in the hydraulic brake system. Water mixed with brake fluid lowers the fluid boiling point. Keep all fluid containers capped to prevent contamination.
- Always fill the master cylinder reservoir when the engine is cold.
- Never allow the brake fluid to come in contact with the painted surfaces.

The master cylinder reservoir must be kept properly filled to ensure adequate reserve and to prevent air and moisture from entering the hydraulic system. However, because of expansion due to heat absorbed from the brakes and the engine, the reservoir must not be overfilled. The brake fluid reservoir is on the master cylinder, which is located under the hood on the left side of the cowl. Thoroughly clean reservoir cap before removal to avoid getting dirt into reservoir. Remove cap and diaphragm. Add fluid as required to bring level to the "MAX" mark on the reservoir tank. Use "DOT 3" Hydraulic Brake Fluid. If the fluid cap diaphragm is stretched, return it to the original position before installing.

DETERIORATION OF BRAKE FLUID

Using any other brake fluid than specified or brake fluid with mineral oil or water mixed in will drop the boiling point of brake fluid. It may, in turn, result in vapor lock or deteriorated rubber parts of the hydraulic system. Be sure to change brake fluid at specified intervals.
If rubber parts are deteriorated, remove all the system parts and clean them with alcohol. Prior to reassembly, dry the cleaned parts with air to remove the alcohol. Replace all hoses and rubber parts of the system.

LEAKAGE OF BRAKE FLUID

With engine idling, set shift lever in the neutral position and continue to depress brake pedal at a constant pressure.
Should the pedal stroke become deeper gradually, leak from the hydraulic pressure system is possible. Make sure by visual check that there is no leak.

BLEEDING BRAKE HYDRAULIC SYSTEM

A bleeding operation is necessary to remove air from the hydraulic brake system whenever air is introduced into the hydraulic system. It may be necessary to bleed the hydraulic system at all four brakes if air has been introduced through a low fluid level or by disconnecting brake pipes at the master cylinder. If a brake pipe is disconnected at one wheel, only that wheel cylinder/caliper needs to be bled. If pipes are disconnected at any fitting located between master cylinder and brakes, then the brake system served by the disconnected pipe must be bled.

1. For 4-wheel Antilock Brake System (ABS) equipped vehicle, be sure to remove the ABS main fuse 40A located at the relay and fuse box before bleeding air. If you attempt to bleed air without removing the main fuse, air cannot be let out thoroughly, and this may cause damage to the hydraulic unit. After bleeding air, be sure to replace the ABS main fuse back to its original position.
2. Set the parking brake completely, then start the engine.
   NOTE:
   The vacuum booster will be damaged if the bleeding operation is performed with the engine off.
3. Remove the master cylinder reservoir cap.
4. Fill the master cylinder reservoir with brake fluid. Keep the reservoir at least half full during the air bleeding operation.
5. Always use new brake fluid for replenishment.
6. In replenishing brake fluid, take care that air bubbles do not enter the brake fluid.
   - When the master cylinder is replaced or overhauled, first bleed the air from the master cylinder, then from each wheel cylinder and caliper following the procedures described below.

Bleeding the master cylinder (Fig. 5A-1)

7. Disconnect the rear wheel brake pipe ① from the master cylinder (Fig. 5A-1). Check the fluid level and replenish as necessary. If replenished, leave the system for at least one minute.
8. Depress the brake pedal slowly once and hold it depressed.
9. Completely seal the delivery port of the master cylinder where the pipe was disconnected with your finger, then release the brake pedal slowly.
10. Release your finger from the delivery port when the brake pedal returns completely.
11. Repeat steps 7 through 9 until the brake fluid comes out of the delivery port during step 7.

NOTE:
Do not allow the fluid level in the reservoir to go below the half-way mark.

12. Reconnect the brake pipe ① to the master cylinder and tighten the pipe.
13. Depress the brake pedal slowly once and hold it depressed.
14. Loosen the rear wheel brake pipe ① at the master cylinder (Fig. 5A-1).
15. Retighten the brake pipe, then release the brake pedal slowly.
16. Repeat steps 13 through 15 until no air comes out from the port when the brake pipe is loosened.

NOTE:
Be very careful not to allow the brake fluid to come in contact with painted surfaces.

17. Bleed the air from the front wheel brake pipe connection ② by repeating steps 7 through 16 (Fig. 5A-1).

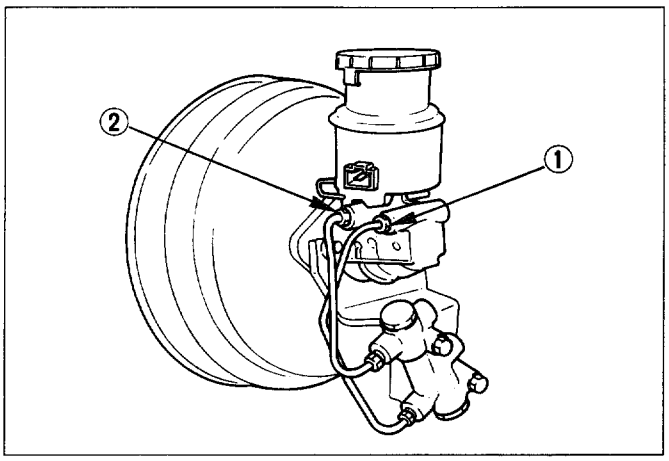

Fig. 5A-1

Bleeding the caliper

18. Bleed the air from each wheel in the order listed below.
    - Right rear caliper
    - Left rear caliper
    - Right front caliper
    - Left front caliper

    If brake fluid does not come out or brake fluid does not remain in the master cylinder while bleeding each caliper in the order listed above, the master cylinder may contain air in its bore. First bleed the master cylinder as described in step 7 through 17.
19. Place the proper size box end wrench over the bleeder screw.
20. Cover the bleeder screw with a transparent tube, and submerge the free end of the transparent tube in a transparent container containing brake fluid.
21. Pump the brake pedal slowly three (3) times (once/sec), then hold it depressed.
22. Loose the bleeder screw until fluid flows through the tube.
23. Retighten the bleeder screw.
24. Release the brake pedal slowly.
25. Repeat step 21 through 24 until the air is completely removed. It may be necessary to repeat the bleeding procedure 10 or more times for front wheels and 15 or more times for rear wheels.
26. Go to the next wheel in the sequence after each wheel is bled. Be sure to monitor reservoir fluid level.
27. Depress the brake pedal to check if you feel "sponginess" after the air has been removed from all wheel cylinders and calipers. If the pedal feels "spongy", the entire bleeding procedure must be repeated.
28. After the bleeding operation is completed on each individual wheel, check the level of brake fluid in the reservoir and replenish up to the "MAX" level if necessary.
29. Attach the reservoir cap.
    - If the diaphragm inside the cap is deformed, reform it and install.
30. Stop the engine.

FLUSHING BRAKE HYDRAULIC SYSTEM

It is recommended that the entire hydraulic system be thoroughly flushed with clean brake fluid whenever new parts are installed in the hydraulic system. Approximately one quart of fluid is required to flush the hydraulic system.
The system must be flushed if there is any doubt as to the grade of fluid in the system or if fluid has been used which contains the slightest trace of mineral oil. All rubber parts that have been subjected to a contaminated fluid must be replaced.

BRAKE PIPES AND HOSES

The hydraulic brake system components are interconnected by special steel piping and flexible hoses. Flexible hoses are used between the frame and the front calipers, the frame and rear axle case and the rear axle and the rear calipers.
When the hydraulic pipes have been disconnected for any reason, the brake system must be bled after reconnecting the pipe; refer to "Bleeding the Brake Hydraulic System" in this section.

BRAKE HOSE INSPECTION

The brake hoses should be inspected at least twice a year. The brake hose assembly should be checked for road hazard, cracks and chafing of the outer cover, and for leaks and blisters. Inspect for proper routing and mounting of the hose. A brake hose that rubs on suspension components will wear and eventually fail. A light and mirror may be needed for an adequate inspection. If any of the above conditions are observed on the brake hose, adjust or replace the hose as necessary.

CAUTION:
Never allow brake components such as calipers to hang from the brake hoses, as damage to the hoses may occur.

BRAKE HOSE REPLACEMENT

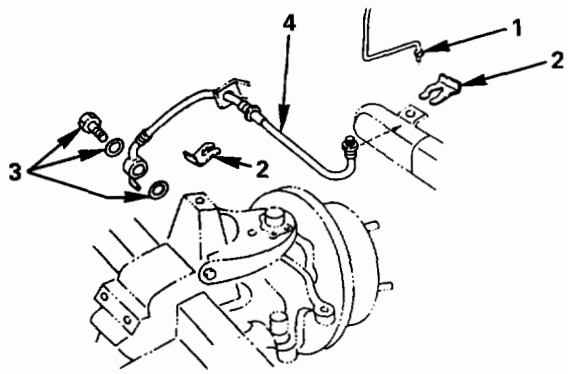

Front / rear caliper brake hose
Removal steps
1. Brake pipe
2. Clip
3. Bolt and gasket
4. Hose

Installation steps
To install, follow the removal steps in the reverse order.

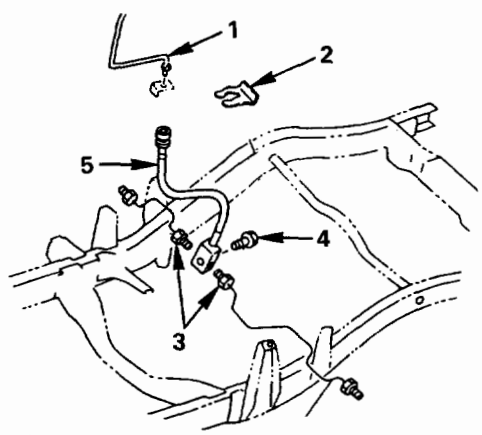

Rear axle brake hose
Removal steps
1. Brake pipe
2. Clip
3. Brake pipe
4. Bolt
5. Hose

Installation steps
To install, follow the removal steps in the reverse order.

Fig. 5A-2

REMOVAL

Preparation:

- Raise the vehicle and support it with suitable safety stands.
- Remove wheel and tire assembly.
- Clean dirt, grease, and other foreign material off the hose fittings at both ends.

Front/Rear Caliper Brake Hose

1. **Brake pipe**
2. **Clip**
3. **Bolt and gasket**
4. **Hose**

Rear Axle Brake Hose

1. **Brake pipe**
2. **Clip**
3. **Brake pipe**
4. **Bolt**
5. **Hose**

INSTALLATION

To install, follow the removal steps in the reverse order, noting the following points. After installing the brake hoses, bleed brakes as described in this section.

Front/Rear Caliper Brake Hose

1. Tighten the brake pipes to the specified torque.

	Torque N·m (lb·ft)	16 (12)

2. Tighten the bolt to the specified torque.

	Torque N·m (lb·ft)	35 (26)

NOTE:

- Always use new gaskets.
- Be sure to put the hooked edge of the flexible hose end into the anti-rotation cavity.

Rear Axle Brake Hose

1. Tighten the brake pipes to the specified torque.

	Torque N·m (lb·ft)	16 (12)

2. Tighten the bolt to the specified torque.

	Torque N·m (lb·in)	13 (113)

BRAKE PIPE REPLACEMENT

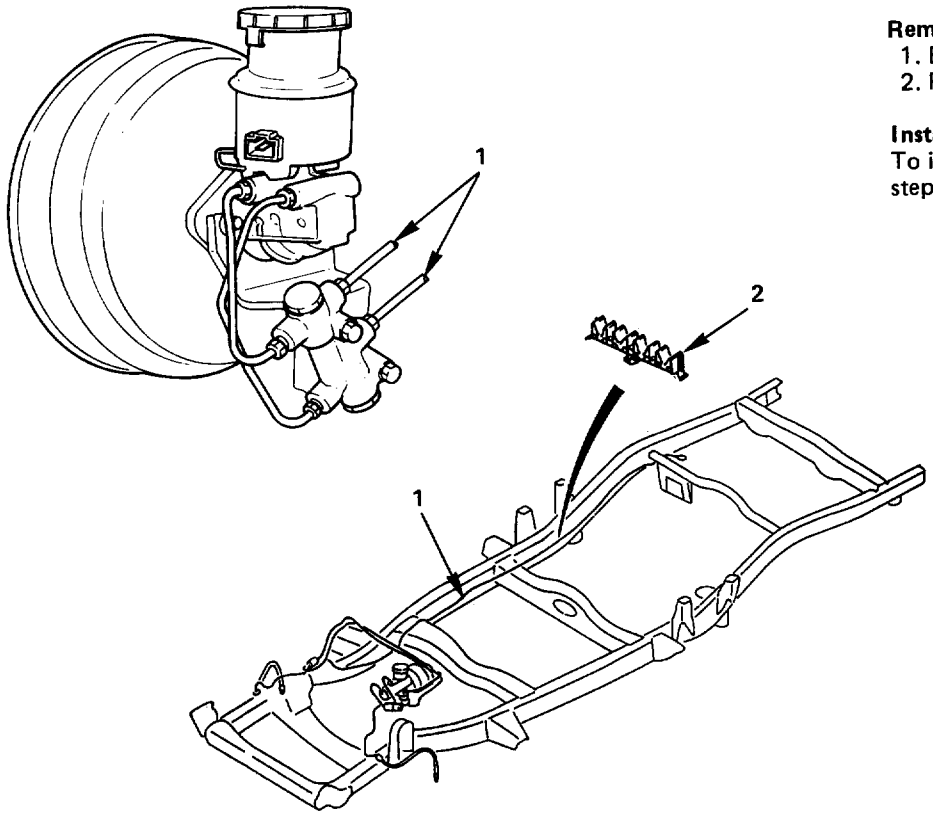

Removal steps
1. Brake pipe
2. Plastic clip

Installation steps
To install, follow the removal steps in the reverse order.

Fig. 5A-3

REMOVAL

Preparation:

- Raise the vehicle and support it with suitable safety stands.
- Remove wheel and tire assembly as necessary.
- Clean dirt, grease, and other foreign material off the pipe fittings at both ends.

1. **Brake pipe**
2. **Plastic clip**

INSTALLATION

To install, follow the removal steps in the reverse order, noting the following points. After installing the brake pipes, bleed brakes as described in this section.

1. Tighten the brake pipes to the specified torque.

Torque N·m (lb·ft)	Master cylinder side	12 (104 lb·in)
	Others	16 (12)

COMBINATION VALVE/P & B (PROPORTIONING AND BYPASS) VALVE

The combination valve/P & B valve contains two sections, each serving a different function.
The proportioning section of the combination valve/ P & B valve proportions outlet pressure to the rear brakes after a predetermined rear input pressure has been reached. This is done to prevent rear wheel lock-up on the vehicles with light rear wheel loads.
The valve has a By-pass feature which assures full system pressure to the rear brakes in the event of a front brake system malfunction, also full front pressure is retained in the event of rear brake malfunction.

The combination valve has a pressure differential warning switch which is designed to constantly compare front and rear brake pressure from the master cylinder and turn on the brake system warning light on the instrument panel in the event of a front or rear system malfunction. The valve and switch are so designed that the switch will latch in the "warning" position once a malfunction has occurred. The only way the light can be turned off is to repair the malfunction and apply a pedal force required to develop line pressure. The combination valve/P & B valve is not repairable and must be replaced as a complete assembly.

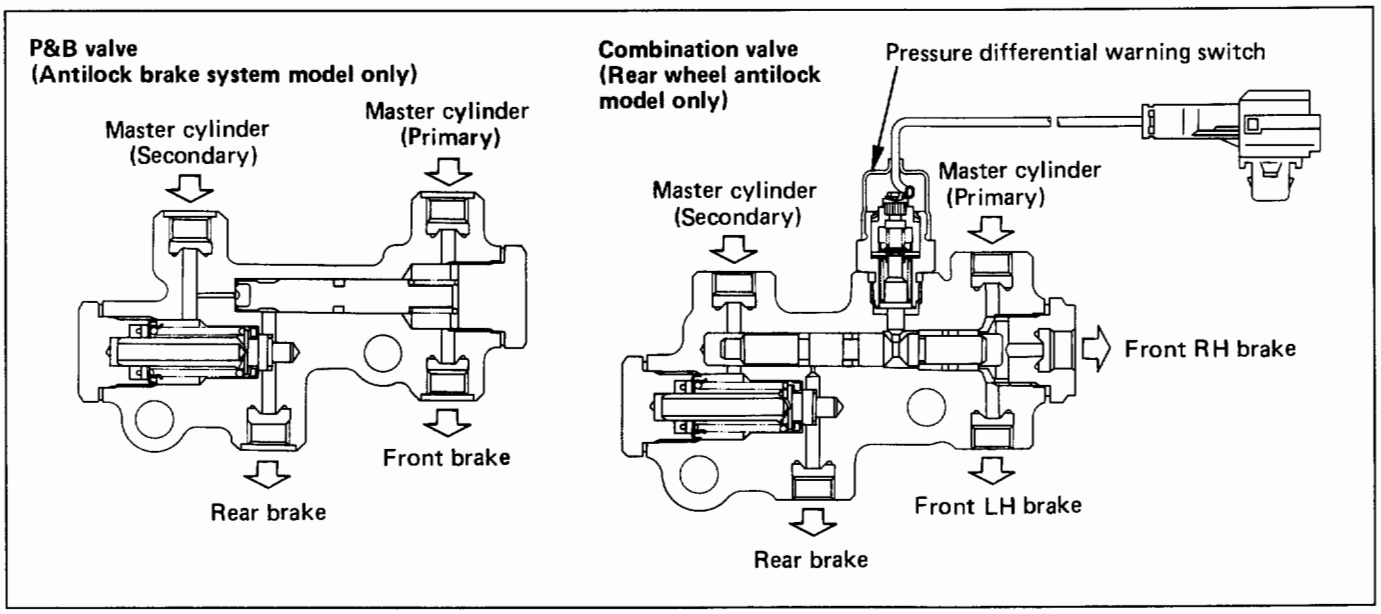

Fig. 5A-4

Combination Valve (RWAL model only) Electrical Circuit Test

1. Disconnect the wiring connector at the combination valve (Fig. 5A-5).
   - Connect a jumper wire from the harness to ground.
2. Turn the ignition key to "ON".
   - The warning light should come on.
   - If the light will not come on, check the bulb. If the bulb is good, refer to Chassis Electrical (Sec. 8) for further diagnosis.
3. Turn the ignition off.
   - Disconnect jumper wire and connect the harness to the switch terminal.

Combination Valve (RWAL model only) Warning Switch Test

1. Raise the vehicle.
   - Support with suitable safety stands.
2. Attach a hose to a rear brake bleeder screw.
   - Immerse the opposite end of the hose into a container partially filled with clean brake fluid.
   - Make sure the master cylinder reservoir is full.
3. Turn the ignition key to "ON".
   - Open the bleeder screw while a helper applies moderate pressure to the brake pedal.
   - The warning light should come on.
   - Close the bleeder screw before the helper releases the brake pedal.
4. Reapply the brake pedal with moderate to heavy pressure.
   - The light should go out.
5. Attach a hose to a front brake bleeder screw.
   - Immerse the opposite end of the hose into a container partially filled with clean brake fluid.
   - Make sure the master cylinder reservoir is full.
6. Turn the ignition key to "ON".
   - Open the bleeder screw while a helper applies moderate pressure to the brake pedal.
   - The warning light should come on.
   - Close the bleeder screw before the helper releases the brake pedal.
7. Reapply the brake pedal with moderate to heavy pressure.
   - The light should go out.

8. Turn the ignition key off.
   - If the warning light does not come on during steps 3 and 6, but does light when a jumper is connected to ground, the warning switch portion of the valve is faulty. Do not disassemble any portion of the valve. It must be replaced.
9. Remove the safety stands.
   - Lower the vehicle.
   - Check and fill the master cylinder to the proper level.

VALVE REPLACEMENT

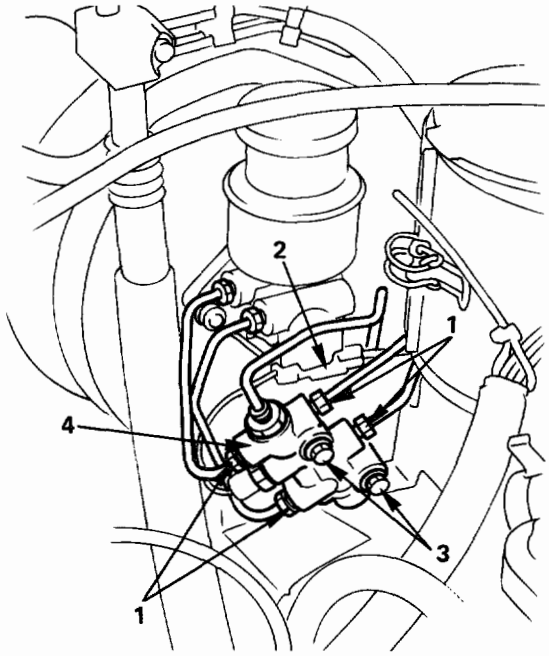

Removal steps
1. Hydraulic pipes
2. Warning switch connector (Combination valve only)
3. Bolt
4. Combination valve/P&B valve

Installation steps
To install, follow the removal steps in the reverse order.

Fig. 5A-5

REMOVAL

- The combination valve/P & B valve is not repairable and must be replaced as a complete assembly.
- Care must be taken to prevent brake fluid from contacting any painted surface.

1. **Hydraulic pipes**
   - Plug the pipes to prevent the loss of fluid or the entrance of dirt.
2. **Warning switch connector (Combination valve only)**
3. **Bolt**
4. **Combination valve/P & B valve**

INSTALLATION

4. **Combination valve/P & B valve**
3. **Bolt**

Torque N·m (lb·in)	13 (113)

2. **Warning switch connector (Combination valve only)**
1. **Hydraulic pipes**

Torque N·m (lb·ft)	16 (12)

After installing the brake pipes, bleed brakes as described in this section.

INSPECTION OF BRAKE PAD LINING (Fig. 5A-6)

Inspect the brake linings any time the wheels are removed (tire rotation, etc.). Check both ends of the outer pad by looking at each end of the caliper. These are the points at which the highest rate of wear normally occurs. At the same time, check the lining thickness on the inner shoe to make sure that it was not worn prematurely. Some inboard shoes and linings have a thermal layer against the shoe, integrally molded with the lining. This extra layer should not be confused with uneven inboard-outboard lining wear. Look down through the inspection hole in the top of the caliper to view the inner shoe. Whenever the thickness of any lining is worn to within 1mm (0.039 in) of the shoe, all disc brake pad and lining assemblies should be replaced at the same time.
The disc pads have a wear indicator that makes a noise when the pad wear to a degree where replacement is required.

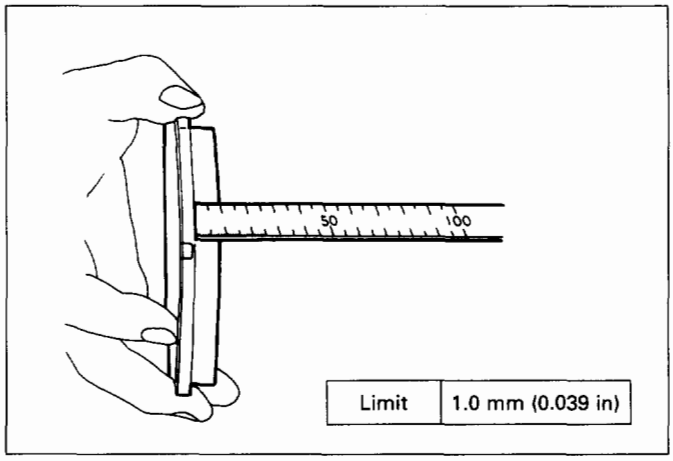

Fig. 5A-6

INSPECTION OF BRAKE ROTORS

In manufacturing the brake rotor, tolerances of the braking surfaces for flatness, parallelism and lateral runout are held very close. The maintenance of close tolerance on the shape of the braking surfaces is necessary to prevent brake roughness.
In addition to these tolerances, the surface finish must be held to a specified range. The control of the braking surface finish is necessary to avoid pulls and erratic performance and to extend lining life.
Light scoring of the rotor surfaces not exceeding 0.38mm (0.015 in) in depth, which may result from normal use, is not detrimental to brake operation.

Thickness Variation Check (Fig. 5A-7)

1. Thickness variation can be checked by measuring the thickness of the rotor at four or more points around the circumference of the rotor. All measurements must be made at 29 mm (1.14 in) front/22 mm (0.87 in) rear from the edge of the rotor.

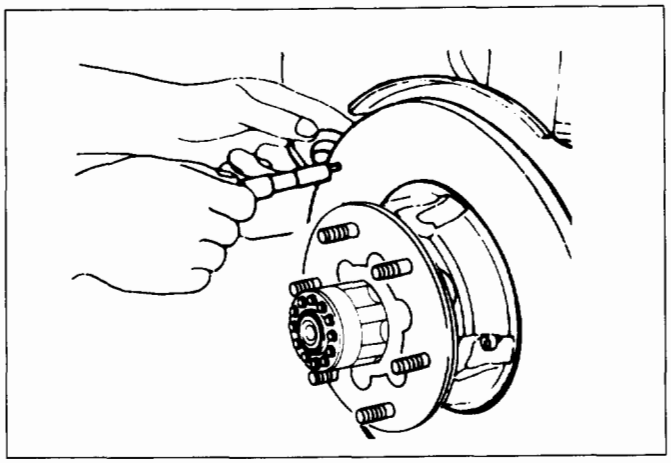

Fig. 5A-7

Front Disc Brake Rotor Thickness

Standard	mm (in)	26.0 (1.024)
Limit	mm (in)	24.6 (0.969)

Rear Disc Brake Rotor Thickness

Standard	mm (in)	18.0 (0.709)
Limit	mm (in)	16.6 (0.654)

2. A rotor that varies by more than 0.010 mm (0.0004 in) can cause pedal pulsation and/or front end vibration during brake applications. A rotor that does not meet these specifications should be refinished to specifications or replaced.

Lateral Runout Check (Fig. 5A-8)

1. Adjust the wheel bearing correctly.
   - Refer to "Front Drive Axle" in Section 4C.
2. Install 2 wheel nuts to retain rotor.
3. Fasten a dial indicator to the suspension so that the indicator stylus contacts the rotor about 29 mm (1.14 in)-front/22 mm (0.87 in)-rear from the rotor edge.
4. Zero the dial indicator.
5. Move the rotor one complete revolution and observe total indicated runout.

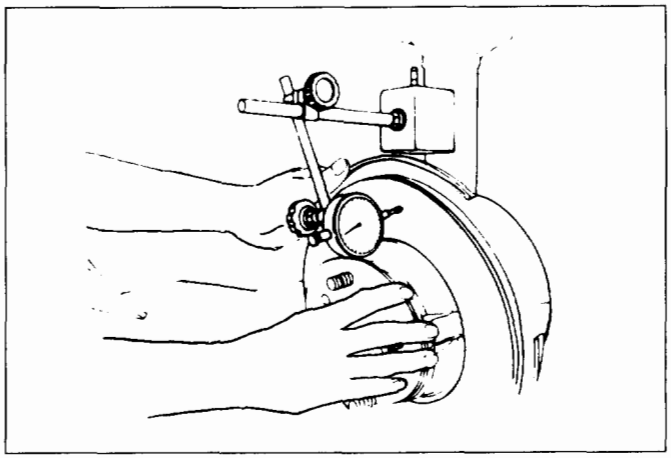

Fig. 5A-8

Maximum rotor runout mm (in)	0.13 (0.005)

- If runout is greater than the limit, replace or refinish the rotor.

Replacing Brake Rotors

When installing new brake rotors, do not refinish the surfaces, as these parts are at the correct level of surface finish.

Refinishing Brake Rotors

Accurate control of the rotor tolerances is necessary for proper performance of the disc brakes. Machining of the rotor should be done only with precision equipment.
All brake rotors have a minimum thickness dimension cast into them. This dimension is the minimum wear dimension and not a refinish dimension. Do not use a brake rotor that will not meet the specifications, as shown in the "Thickness variation check".
When refinishing rotors, always use sharp cutting tools or bits. Dull or worn tools leave a poor surface finish which will affect initial braking performance. Vibration dampening attachments should always be used when refinishing braking surfaces. These attachments eliminate tool chatter and will result in better surface finish.

Rear Drum (in Disc) Inside Diameter Check

Check the rear drum inside diameter by measuring at more than two portions as shown in Fig. 5A-9.
If the inside diameter is greater than the limit, replace the rear rotor.

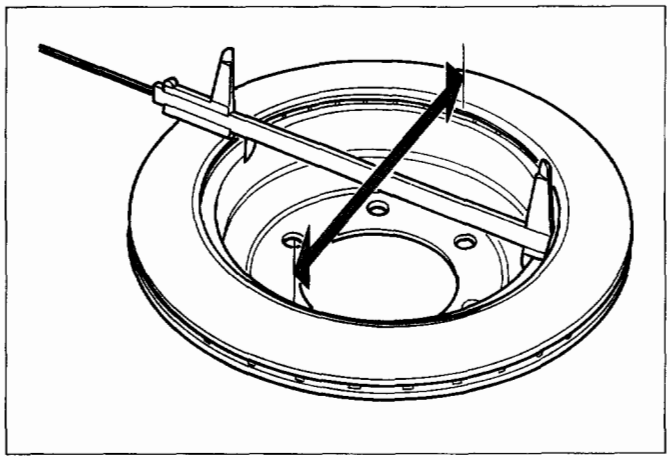

Fig. 5A-9

Rear Drum Inside Diameter

Standard	mm (in)	210.0 (8.27)
Limit	mm (in)	211.4 (8.32)

BRAKE PEDAL ASSEMBLY

CHECKING PEDAL HEIGHT (Fig. 5A-10)

The push rod serves as the brake pedal stopper when the pedal is fully released. Brake pedal height adjustment should be performed as follows:

Adjust brake pedal

1. Measure the brake pedal height after making sure the pedal is fully returned by the pedal return spring.
   Pedal height (L2) must be measured after starting the engine and revving it several times (Fig. 5A-10).

Pedal Free Play (L1)	mm (in)	6-10 (0.23- 0.39)
Pedal Height (L2)	mm (in)	208-218 (8.19-8.58)

NOTE:
Pedal free play (L1) must be measured after turning off the engine and stepping on the brake pedal firmly five times or more.

2. If the measured value is not within the above range, adjust the brake pedal as follows:
   a) Disconnect the stoplight switch connector.
   b) Loosen the stoplight switch lock nut.
   c) Rotate the stoplight switch so that it moves away from the brake pedal.
   d) Loosen the lock nut on the push rod.
   e) Adjust the brake pedal to the specified height by rotating the push rod in the appropriate direction.
   f) Tighten the lock nut to the specified torque.

Torque	N·m (lb·ft)	20 (15)

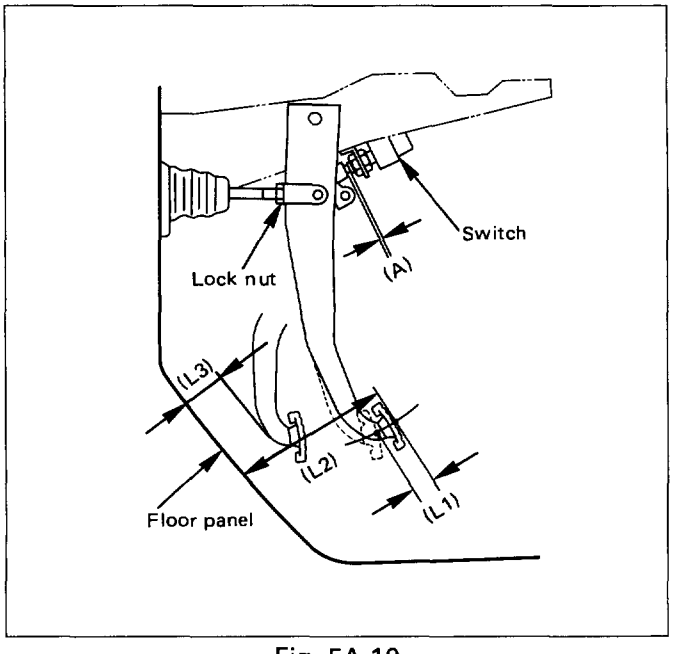

Fig. 5A-10

   g) Adjust the stoplight switch to the specified clearance (between switch housing and brake pedal) by rotating the switch housing (Fig. 5A-11).

Clearance	mm (in)	0.5 - 1.0 (0.02 - 0.04)

NOTE:
While adjusting the stoplight switch, make sure that the threaded part of the stoplight switch does not push the brake pedal.

   h) Tighten the stoplight switch lock nut.
   i) Connect the stoplight switch connector.

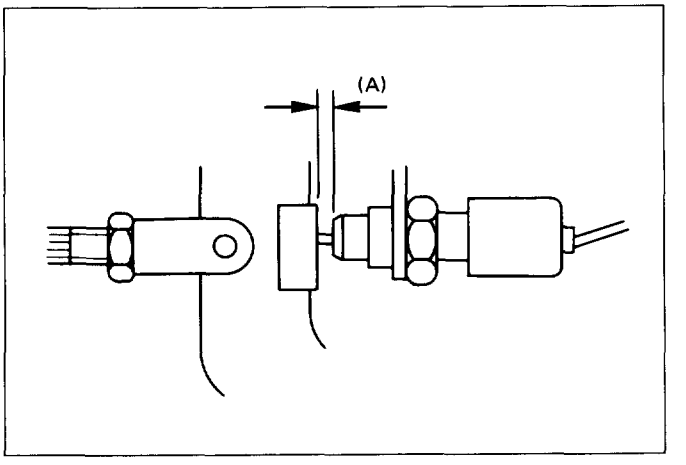

Fig. 5A-11

CHECKING PEDAL TRAVEL (Fig. 5A-10)

1. Pedal height (L3) must be measured after starting the engine and revving it several times to apply vacuum to the vacuum booster fully.

NOTE:
Pedal height (L3) must be 55 mm (2.2 in) or more when about 50 kg (110.25 lb) of stepping force is applied.

2. If the measured value is lower than the above range, air existing in the hydraulic system is suspected and perform bleeding procedure.

BRAKE PEDAL REPLACEMENT

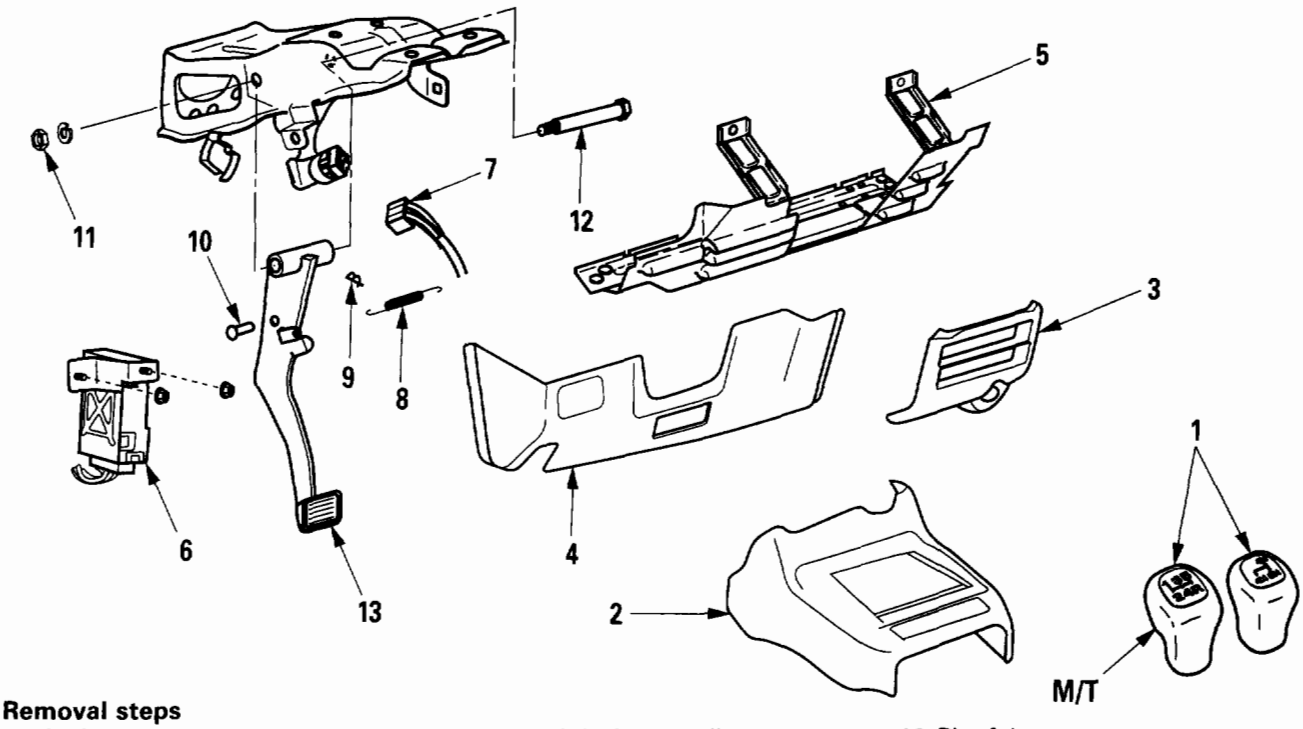

Removal steps
1. Shift knob
2. Front console assembly
3. Lower cluster assembly
4. Instrument panel driver lower cover
5. Driver knee bolster assembly
6. Anti-theft controller
7. Stoplight switch connector
8. Return spring
9. Snap pin
10. Pin
11. Nut
12. Pin, fulcrum
13. Brake pedal

Installation steps
To install, follow the removal steps in the reverse order.

Fig. 5A-12

REMOVAL

1. **Shift knob**
2. **Front console assembly**
3. **Lower cluster assembly**
4. **Instrument panel driver lower cover**
5. **Driver knee bolster assembly**
6. **Anti-theft controller**
7. **Stoplight switch connector**
8. **Return spring**
9. **Snap pin**
10. **Pin**
11. **Nut**
12. **Pin, fulcrum**
13. **Brake pedal**

INSTALLATION

13. **Brake pedal**
12. **Pin, fulcrum**
    - Apply grease to the entire circumference of the fulcrum pin.

Torque N·m (lb·ft)	33 (24)

11. **Nut**

Torque N·m (lb·ft)	33 (24)

10. **Pin**
    - Apply grease to the entire circumference of the push rod pin.
9. **Snap pin**
    - Adjust pedal free travel. Refer to "Brake Pedal Adjustment" previously in this section.
8. **Return spring**
7. **Stoplight switch connector**
6. **Anti-theft connector**
5. **Driver knee bolster assembly**
4. **Instrument panel driver lower cover**
3. **Lower cluster assembly**
2. **Front console assembly**
1. **Shift knob**

STOPLIGHT SWITCH REPLACEMENT

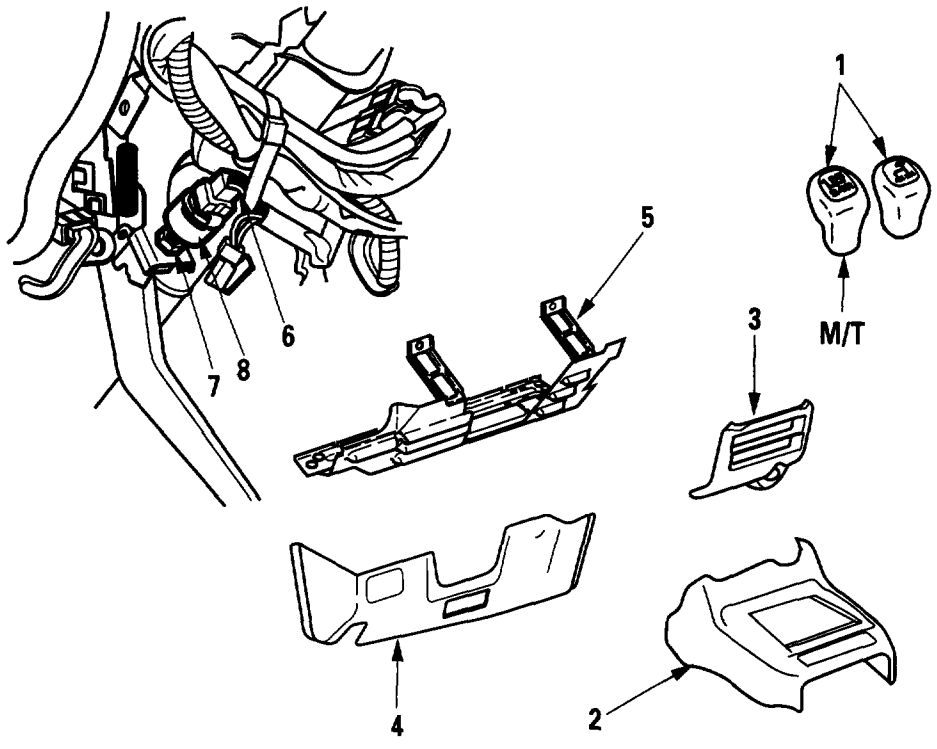

Removal steps
1. Shift knob
2. Front console assembly
3. Lower cluster assembly
4. Instrument panel driver lower cover
5. Driver knee bolster assembly
6. Stoplight switch connector
7. Lock nut
8. Switch

Installation steps
To install, follow the removal steps in the reverse order.

Fig. 5A-13

REMOVAL

1. **Shift knob**
2. **Front console assembly**
3. **Lower cluster assembly**
4. **Instrument panel driver lower cover**
5. **Driver knee bolster assembly**
6. **Stoplight switch connector**
7. **Lock nut**
8. **Switch**

INSTALLATION

8. **Switch**
   - Adjust the stoplight switch to the specified clearance (between switch housing and brake pedal) by rotating the switch housing (Fig. 5A-14).

Clearance mm (in)	0.5 - 1.0 (0.02 - 0.04)

NOTE:
While adjusting the installation of the stoplight switch, make sure that the threaded part of the stoplight switch does not push the brake pedal.

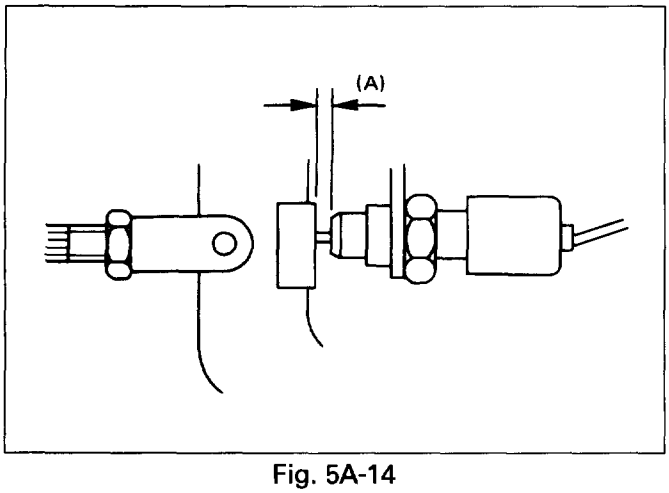

Fig. 5A-14

7. **Lock nut**
6. **Stoplight switch connector**
5. **Driver knee bolster assembly**
4. **Instrument panel driver lower cover**
3. **Lower cluster assembly**
2. **Front console assembly**
1. **Shift knob**

MASTER CYLINDER ASSEMBLY

GENERAL DESCRIPTION

The master cylinder contains two pistons that supply the hydraulic pressure for a dual-circuit braking system. The primary piston provides the fluid pressure to the front brakes, while the secondary piston provides the fluid pressure to the rear brakes. If the pressure is lost from either system, the remaining system will function to stop the vehicle.

CAUTION:

- The master cylinder is not repairable. If found defective, it must be replaced as complete assembly.
- If any hydraulic component is removed or disconnected, it may be necessary to bleed all or part of the brake system. (Refer to "On-Vehicle Service" previously in this section.)
- The torque values specified are for dry, unlubricated fasteners.
- Perform service operations on a clean bench free from all mineral oil materials.

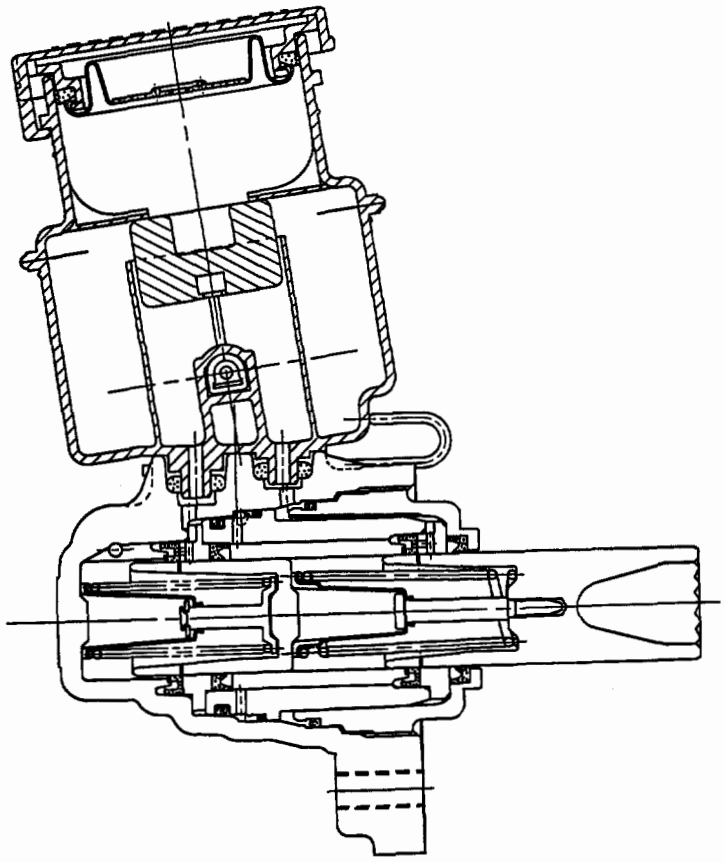

Fig. 5A-15

ON-VEHICLE SERVICE

FLUID RESERVOIR TANK

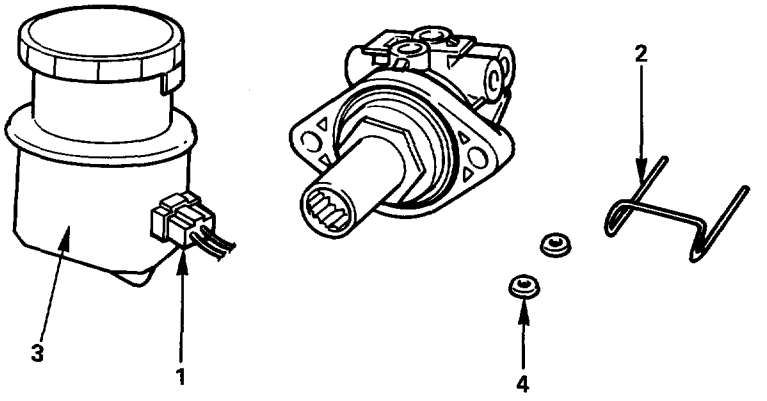

Removal steps
1. Electrical connector
2. Retainer
3. Fluid reservoir
4. O-ring

Installation steps
To install, follow the removal steps in the reverse order.

Fig. 5A-16

REMOVAL

NOTE:
Before removing fluid reservoir, remove brake fluid from fluid reservoir.

1. **Electrical connector**
2. **Retainer (Fig. 5A-17)**

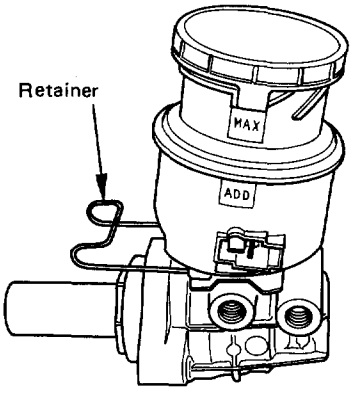

Fig. 5A-17

3. **Fluid reservoir**
   - The fluid level sensor is built into the fluid reservoir (Except rear wheel antilock model). It cannot be removed for servicing.
4. **O-ring**

INSTALLATION

To install, follow the removal steps in the reverse order, noting the following points;

4. **O-ring (Fig. 5A-18)**
   - O-ring must be set onto the fluid reservoir, before installing fluid reservoir.

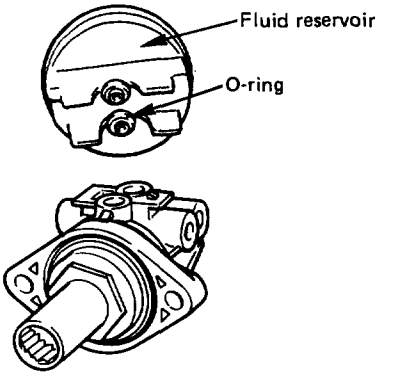

Fig. 5A-18

MASTER CYLINDER ASSEMBLY

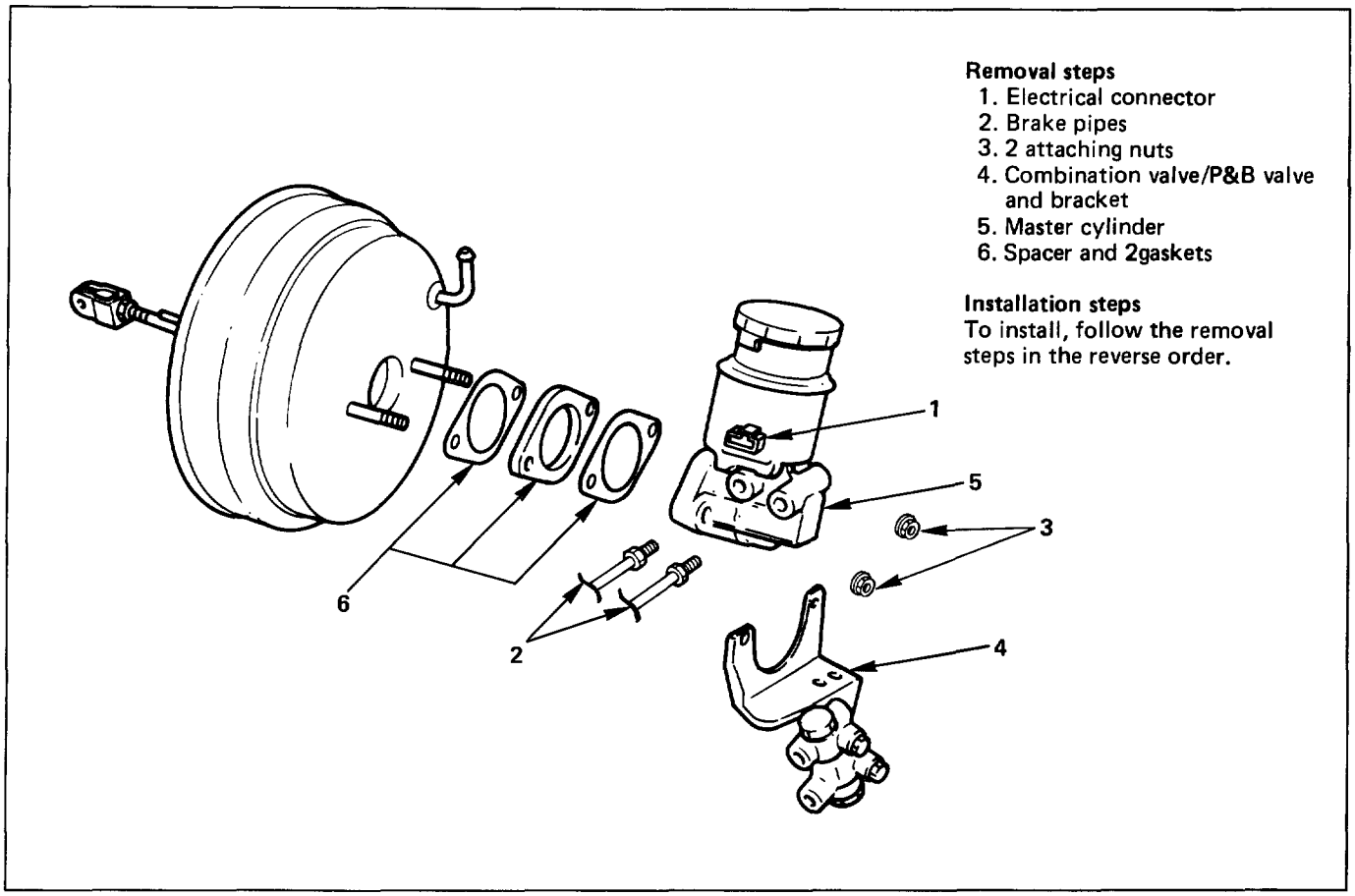

Fig. 5A-19

REMOVAL

CAUTION:
When removing master cylinder from vacuum booster, be sure to get rid of the internal negative pressure of the vacuum booster (by, for instance, disconnecting vacuum hose) in advance.
If any negative pressure remains in the vacuum booster, the piston may possibly come out when the master cylinder is being removed, letting the brake fluid run out.
While removing master cylinder, further, do not hold the piston as it can be easily pulled out.
Outside surface of the piston is the surface on which seals are to slide. Care should be taken to keep the surface free of cuts and dents.

1. **Electrical connector**
2. **Brake pipes**
   - After disconnecting the brake pipe, cap or tape the openings of the brake pipe to prevent the entry of foreign matter.
3. **2 attaching nuts**
4. **Combination valve/P & B valve and bracket**
5. **Master cylinder**
6. **Spacer and 2 gaskets**

INSTALLATION

6. **Spacer and 2 gaskets**
5. **Master cylinder**
   - When replacing the master cylinder or vacuum booster or both, always measure the vacuum booster push rod protrusion and adjust it as necessary. (Refer to "Vacuum Booster Assembly" in Section 5A1.)
4. **Combination valve/P & B valve and bracket**
3. **2 attaching nuts**
   - Tighten the attaching nuts to the specified torque.

Torque N·m (lb·in)	13 (113)

2. **Brake pipes**
   - Tighten the brake pipe to the specified torque.

Torque N·m (lb·ft)	Master cylinder side	12 (104 lb·in)
	Others	16 (12)

1. **Electrical connector**

UNIT REPAIR

MASTER CYLINDER

- The master cylinder is not repairable and must be replaced as complete assembly if found defective.

INSPECTION

Excessive brake pedal travel, malfunction or dragging brake suggests that the master cylinder is defective. In such cases perform the following visual check.

Visual check

Make parts replacement as required if wear, distortion, nicks, cuts, corrosion, or other abnormal conditions are found through the following parts inspection;

- Master cylinder body
- Fluid reservoir
- O-ring

FUNCTIONAL INSPECTION OF MASTER CYLINDER PISTON (Fig. 5A-20)

Push the primary piston with your fingers to check that it travels smoothly. If the motion is questionable, replace the master cylinder as a complete assembly.

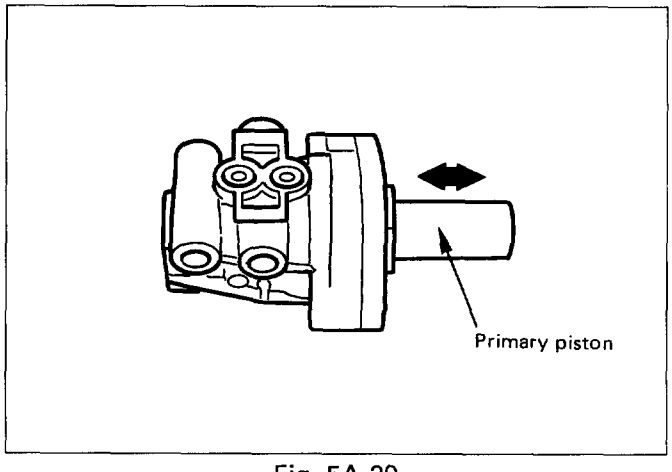

Fig. 5A-20

FUNCTIONAL INSPECTION OF MASTER CYLINDER (Fig. 5A-21 and 5A-22)

Inspect the master cylinder for function as follows. If any abnormal function is found, replace with a new one.

Primary piston holder: J-39242
(including master cylinder attachment and master cylinder plug)

- Install the primary piston holder onto the master cylinder with the spacer (2 bolts) with its adjusting bolt screwed in up to the "0" line (Fig. 5A-21)

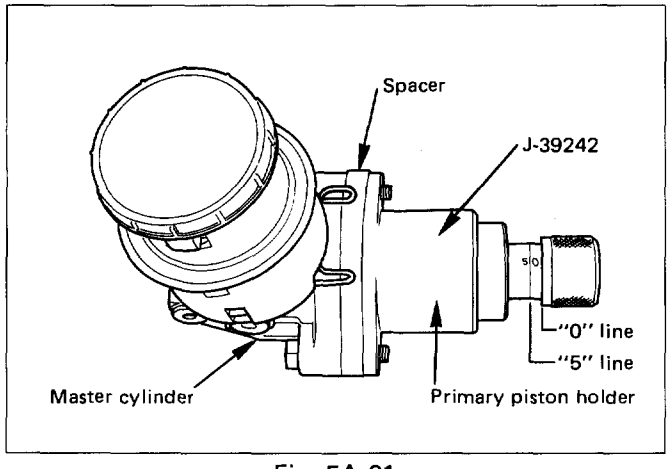

Fig. 5A-21

Radiator cap tester: J-24460-01

- Connect master cylinder attachment with the end of radiator cap tester, and apply air pressure with the cap tester. Make sure there is no rise in pressure and that with the adjusting bolt further screwed in 5 mm (align the adjusting bolt to the "5" line). There should be a pressure increase of 0.5kg/cm^2 or more (Fig. 5A-22).

NOTE:
When checking the front (or primary) side, be sure to mount master cylinder plug in the rear (or secondary) port.

	"0" line	"5" line
Apply air pressure to the front and rear ports	No pressure rise.	Pressure increase of 0.5 kg/cm^2 or more
Remarks	Checks port into the atmospheric pressure chamber	Checks air tightness of the pressure chamber

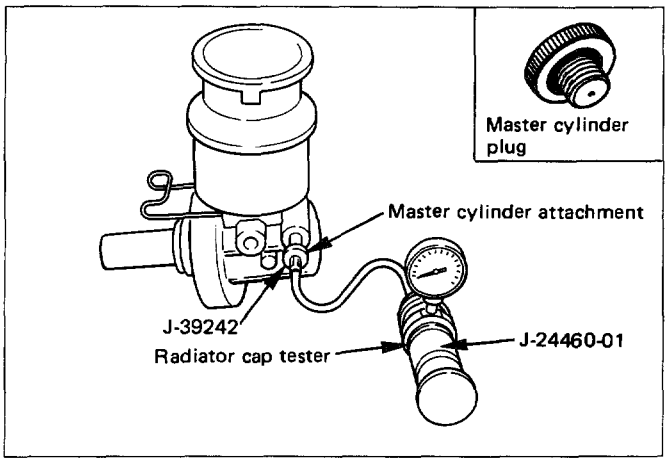

Fig. 5A-22

NOTE:

- Do not use an air compressor, as the air from compressor is mixed with compressor oil.
- When installing the master cylinder onto the vacuum booster, always adjust vacuum booster push rod. (Refer to section 5A1 "Brake Booster System".)
- After the master cylinder is installed onto the vehicle, check for leakage, pedal travel and pedal free play.

MAIN DATA AND SPECIFICATIONS

GENERAL SPECIFICATIONS

Brake pedal		
Pedal free play	mm (in)	6 to 10 (0.23 to 0.39)
Pedal height	mm (in)	208 to 218 (8.19 to 8.58)
Parking brake		
Type		Duo-servo
Brake handle(stem) travel		6 to 7 notches When pulled with a force of 30 kg (66 lb)
Master cylinder		
Type		Dual-circuit
Piston bore diameter	mm (in)	25.4 (1.000)

TORQUE SPECIFICATIONS

N·m (lb·ft)

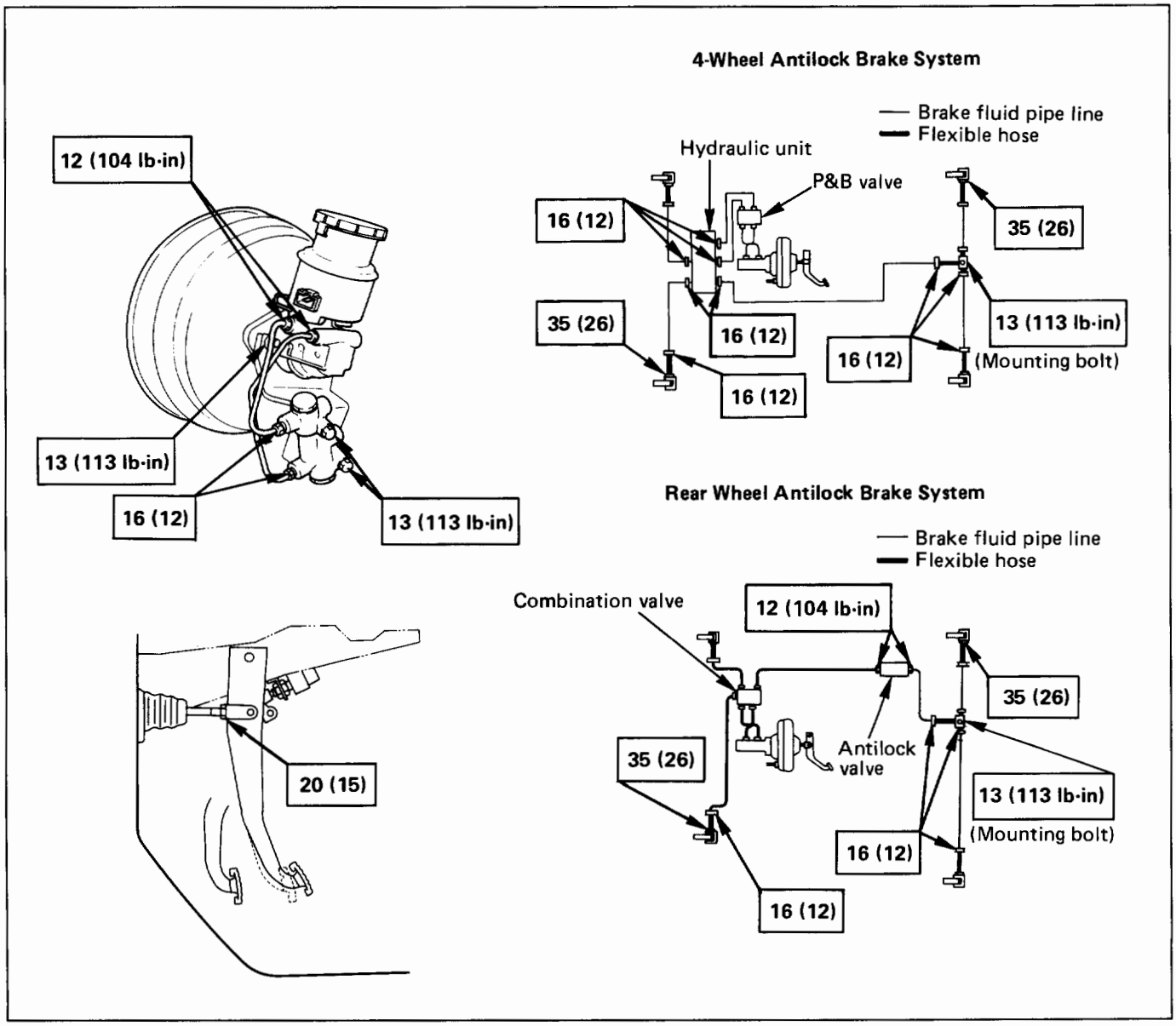

Fig. 5A-23

SPECIAL TOOLS

ILLUSTRATION	**TOOL NO.** TOOL NAME
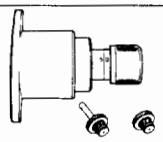	**J-39242** Primary piston holder (including master cylinder attachment and master cylinder plug)

ILLUSTRATION	**TOOL NO.** TOOL NAME
	J-24460-01 Radiator cap tester

SECTION 5A1

BRAKE BOOSTER SYSTEM

CAUTION:
Fasteners are an important attaching part in that they could affect performance of vital parts and systems, and/or could result in major repair expense. They must be replaced with one of the same part number or with an equivalent part if replacement becomes necessary. Do not use replacement parts of lesser quality or substitute design. Torque values must be used as specified during reassembly to assure proper retention of these parts.

CONTENTS

General Description ..... **5A1—1**
Diagnosis ..... **See Section 5A**
On-Vehicle Service ..... **5A1—2**
Vacuum Booster Assembly ..... **5A1—2**
Exterior Components ..... **5A1—4**
Unit Repair ..... **5A1—6**
Vacuum Booster ..... **5A1—6**
Main Data and Specifications ..... **5A1—6**
General Specifications ..... **5A1—6**
Torque Specifications ..... **5A1—6**
Special Tools ..... **5A1—7**

GENERAL DESCRIPTION

This booster is a tandem vacuum unit with a diaphragm effective diameter 205 mm + 230 mm. In normal operating mode, with the service brakes in the released position, the tandem vacuum booster operates with vacuum on both sides of its diaphragms. When the brakes are applied, air at atmospheric pressure is admitted to one side of each diaphragm to provide the power assist. When the service brake is released, the atmospheric air is shut off from the one side of each diaphragm. The air is then drawn from the booster through the vacuum check valve to the vacuum source.

CAUTION:
- If any hydraulic component is removed or disconnected, it may be necessary to bleed all or part of the brake system.
- The torque values specified are for dry, unlubricated fasteners.
- The vacuum booster is not repairable and must be replaced as complete assembly.

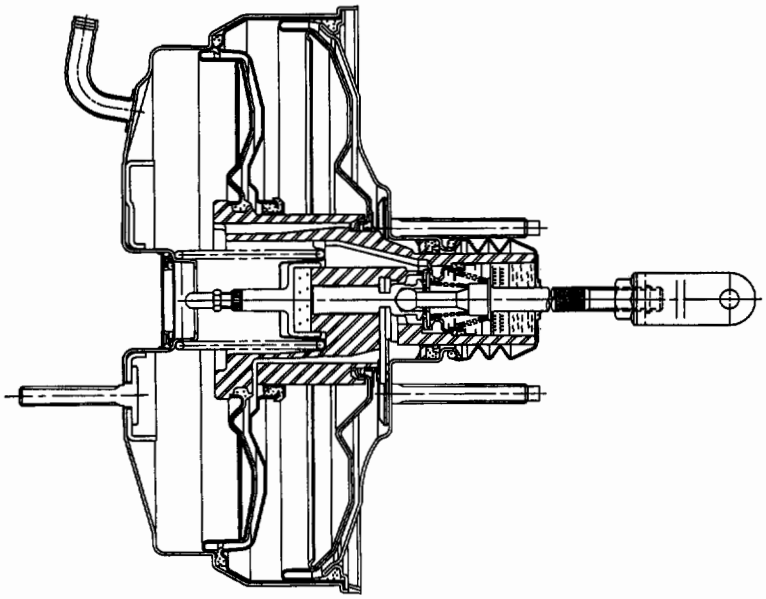

Fig. 5A1-1

ON-VEHICLE SERVICE

VACUUM BOOSTER ASSEMBLY

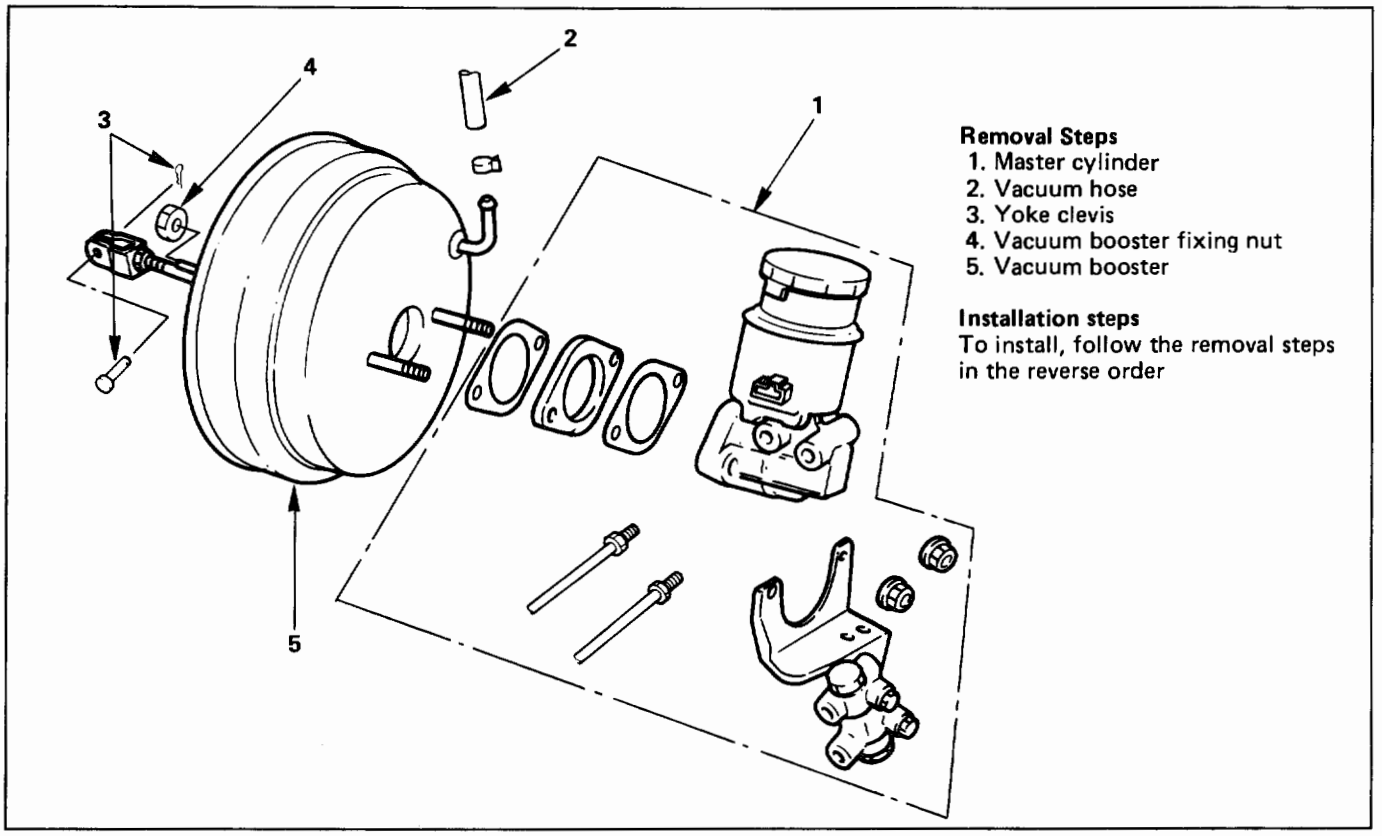

Fig. 5A1-2

REMOVAL

- Before removing the vacuum booster assembly, disconnect and remove brake pipes.

1. **Master cylinder**
   - Refer to "Master Cylinder Removal" in Section 5A.

CAUTION:
When removing master cylinder from vacuum booster, be sure to get rid of the internal negative pressure of the vaccum booster (by, for instance, disconnecting vaccum hose) in advance.
If any negative pressure remains in the vaccum booster, the piston may possibly come out when the master cylinder is being removed, letting the brake fluid run out.
While removing master cylinder, further, do not hold the piston as it can be easily pulled out.
Outside surface of the piston is the surface on which seals are to slide. Care should be taken to keep the surface free of cuts and dents.

2. **Vacuum hose**
3. **Yoke clevis**
   - Disconnect the yoke clevis from the brake pedal.
4. **Vacuum booster fixing nut**
5. **Vacuum booster**

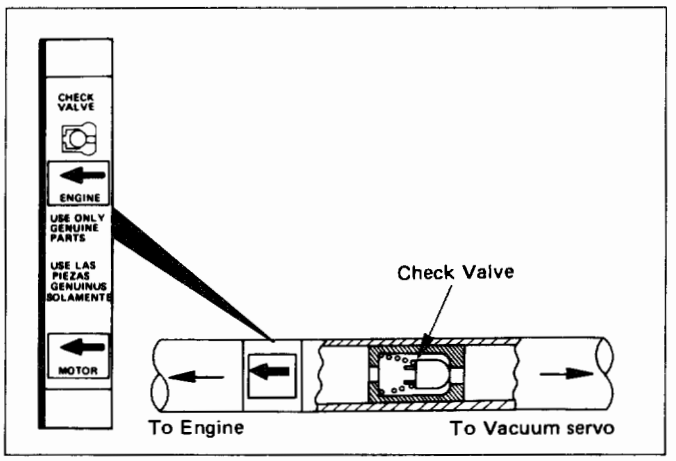

Fig. 5A1-3

INSPECTION AND REPAIR

Vacuum hose (Fig. 5A1-3)
Inspect the check valve, which is installed inside the vacuum hose.

- Air should pass freely from the vacuum booster to the engine.
- Air should not pass from the engine to the vacuum booster. If it does, the check valve is inoperative and must be replaced.

INSTALLATION

5. Vacuum booster

Vacuum booster push rod adjustment

NOTE:
When replacing either master cylinder or vacuum booster, be sure to measure push rod, and adjust if required.

Push rod gauge : J-39216
Vacuum pump : J-23738-A
Push rod support : J-39241

- Remove retainer from vacuum booster front shell using a small screwdriver. Then gently draw plate and seal assembly out of the shell inside (Fig. 5A1-4).

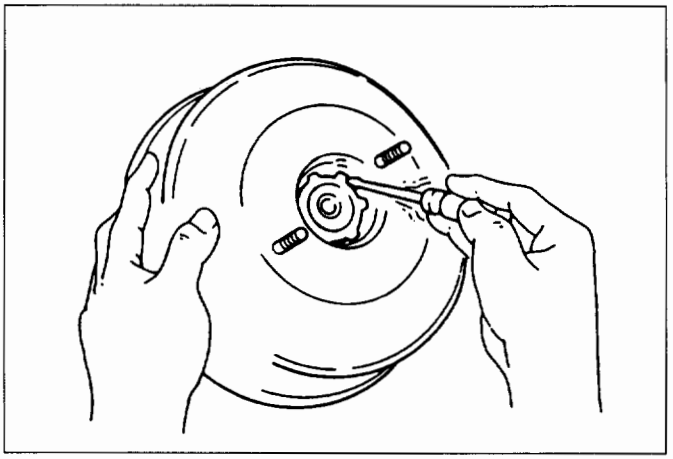

Fig. 5A1—4

- Set push rod gauge on vacuum booster, and apply negative pressure by means of vacuum pump so that the pressure in the vacuum booster becomes 500 mm Hg. (Fig. 5A1-5).

NOTE:
Be sure to apply NEGATIVE pressure after installing a push rod gauge on vacuum booster.

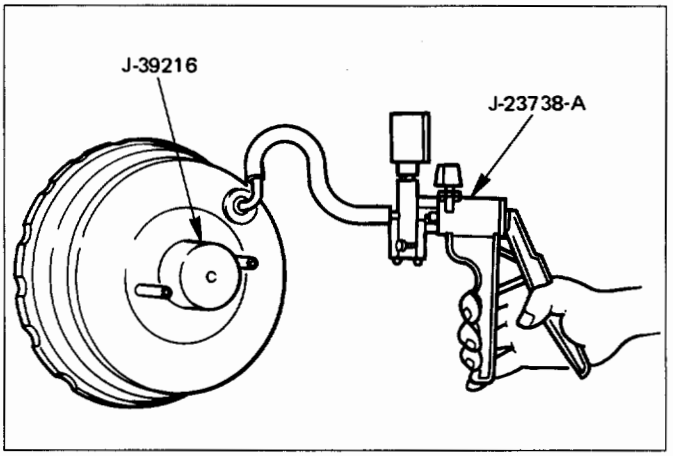

Fig. 5A1-5

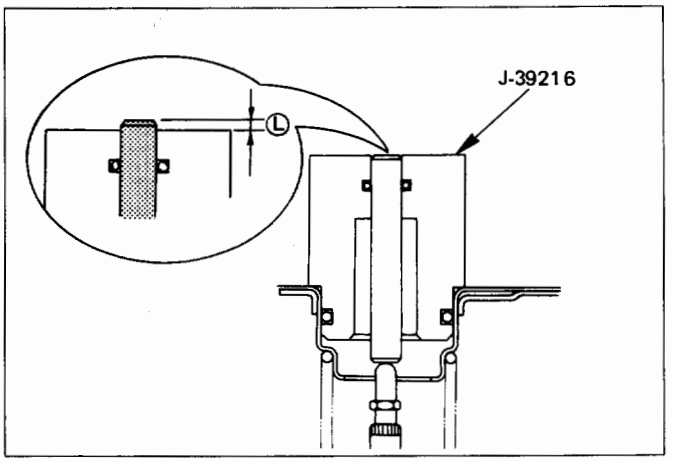

Fig. 5A1-6

- Measure dimension Ⓛ (Fig. 5A1-6)

Dimension Ⓛ (Standard)	mm	0 ± 0.1

- If dimension Ⓛ is out of the standard range, adjust push rod using the special tool (Fig. 5A1-7).

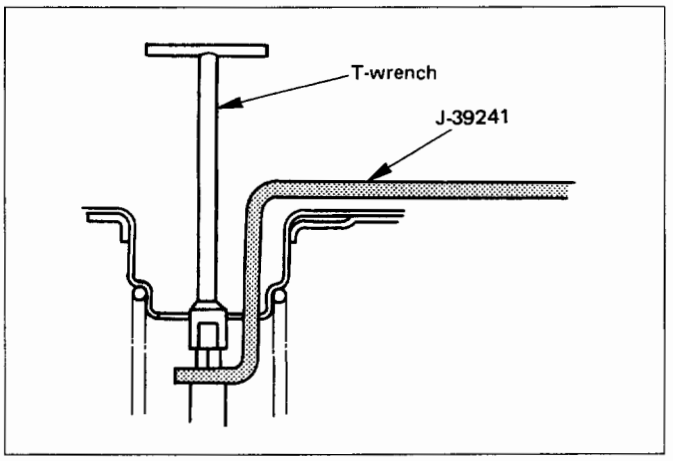

Fig. 5A1-7

- Mount plate and seal assembly in vacuum booster front shell. Then install retainer.

4. Vacuum booster fixing nut

Torque	N·m (lb·ft)	21 (16)

3. Yoke clevis

2. Vacuum hose

- Make sure that the arrow on the hose points in the direction of the engine.

1. Master cylinder

- Refer to "Master Cylinder Installation" in Section 5A.

EXTERIOR COMPONENTS

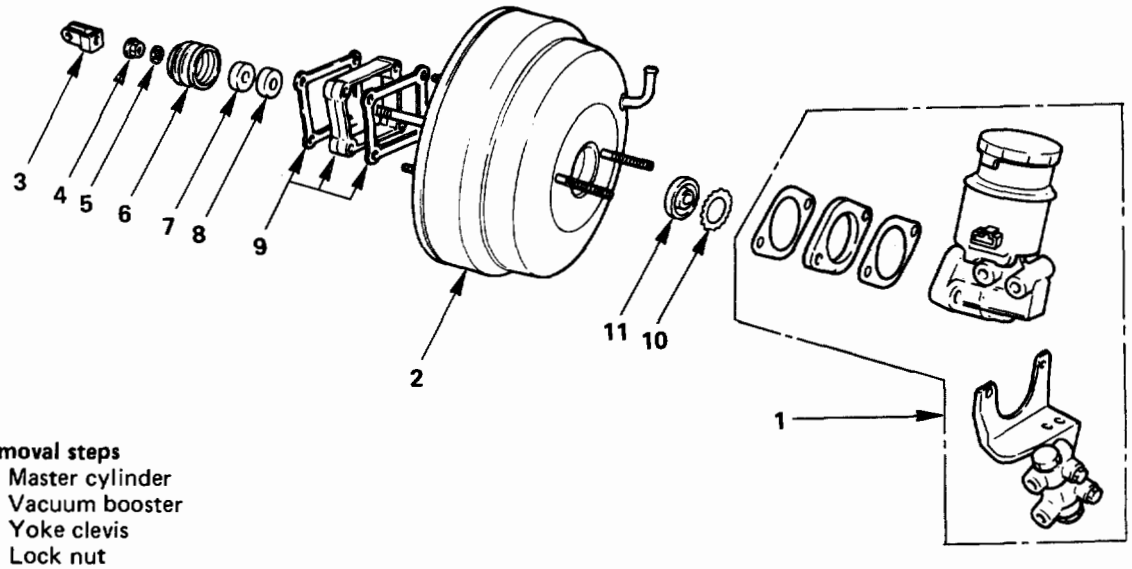

Removal steps
1. Master cylinder
2. Vacuum booster
3. Yoke clevis
4. Lock nut
5. Retaining clip
6. Valve body guard
7. Silencer
8. Filter
9. 2 gaskets and spacer
10. Retainer
11. Plate and seal assembly

Installation steps
To install, follow the removal steps in the reverse order.

Fig. 5A1-8

REMOVAL

1. **Master cylinder**
   - Refer to "Master Cylinder Removal" in Section 5A.
2. **Vacuum booster**
   - Refer to "Vacuum Booster Removal" in this section.
3. **Yoke clevis**
4. **Lock nut**
5. **Retaining clip**
6. **Valve body guard**
7. **Silencer**
8. **Filter**
9. **2 gaskets and spacer**
10. **Retainer**
    - Use a small screwdriver to pry out the retainer. Gently pull out the plate and seal assembly from the shell (Fig. 5A1-9).

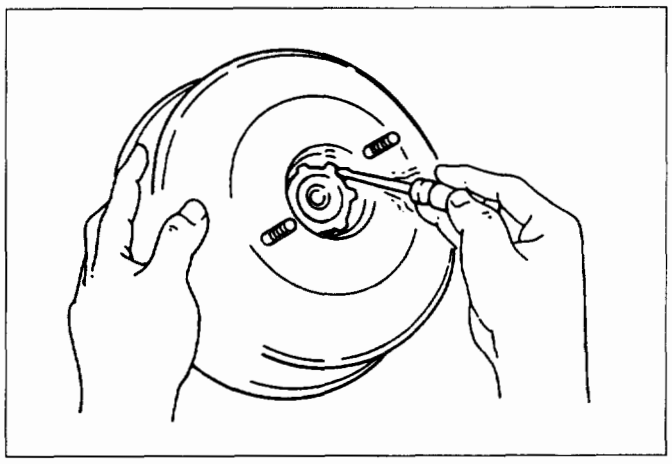

Fig. 5A1-9

11. **Plate and seal assembly**

INSPECTION AND REPAIR

Visual check:
Make necessary parts replacement if cuts, nicks, excessive wear, or other abnormal conditions are found through inspection. Check the following parts.

- Yoke clevis
- Valve body guard
- Silencer
- Filter
- Plate and seal assembly.

INSTALLATION

11. Plate and seal assembly
10. Retainer
9. 2 gaskets and spacer
8. Filter
7. Silencer
6. Valve body guard
5. Retainer
4. Lock nut

Torque N·m (lb·ft)	20 (15)

3. Yoke clevis
2. Vacuum booster
- Refer to "Vacuum Booster Installation" in this section.

1. Master cylinder
- Refer to "Master Cylinder Installation" in Section 5A.
- After installation, perform brake pedal check and adjustment. Refer to "Brake Pedal Assembly" in Section 5A.

UNIT REPAIR

VACUUM BOOSTER

- The vacuum booster cannot be disassembled for repair. Replace a defective vacuum booster with a new one.

MAIN DATA AND SPECIFICATIONS

GENERAL SPECIFICATIONS

Vacuum booster diaphragm diameter		
Front	mm (in)	205 (8.07)
Rear	mm (in)	230 (9.06)
Push rod stroke	mm (in)	More than 32.0 (1.26)
Plunger diameter	mm (in)	10.25 (0.40)
Push rod diameter	mm (in)	27.4 (1.08)

TORQUE SPECIFICATIONS

N·m (lb·ft)

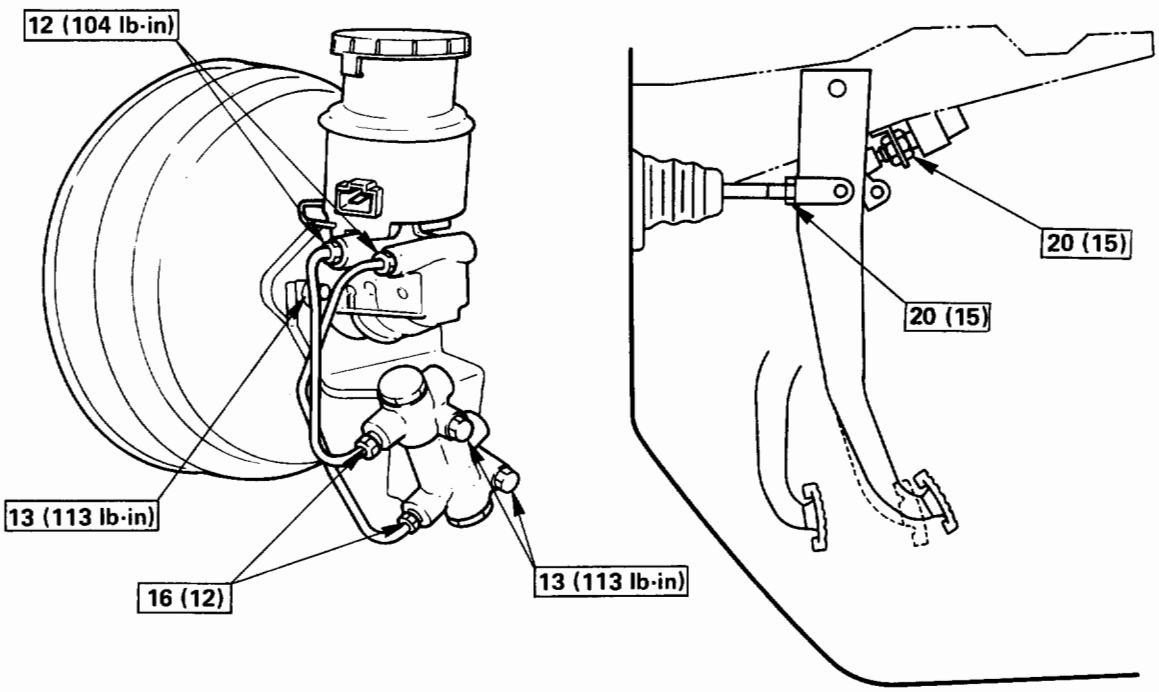

Fig. 5A1-10

SPECIAL TOOLS

ILLUSTRATION	**TOOL NO.** TOOL NAME
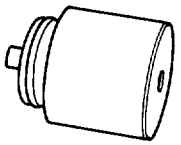	**J-39216** Push rod gauge
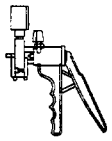	**J-23738-A** Vacuum pump
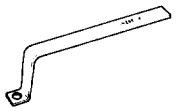	**J-39241** Push rod support

MEMO

SECTION 5A2

DISC BRAKES

CAUTION:
All brake attaching fasteners are an important attaching part in that they could affect performance of vital parts and systems, and/or could result in major repair expense. They must be replaced with one of the same part number or with an equivalent part if replacement becomes necessary. Do not use replacement parts of lesser quality or substitute design. Torque values must be used as specified during reassembly to assure proper retention of these parts.

CONTENTS

General Description 5A2-1
Operation 5A2-1
Diagnosis ..... See Section 5A
On-Vehicle Service 5A2-2
Front Disc Brakes 5A2-2
Brake Pads Inspection 5A2-2
Brake Pads Replacement 5A2-3
Servicing the Rotor 5A2-4
Caliper Replacement 5A2-6
Rebuilding the Caliper 5A2-8
Rear Disc Brakes 5A2-10
Brake Pads Inspection 5A2-10
Brake Pads Replacement 5A2-10
Servicing the Rotor 5A2-12
Caliper Replacement 5A2-14
Rebuilding the Caliper 5A2-17
Parking Brakes ..... See Section 5C
Main Data and Specifications 5A2-19
General Specifications 5A2-19
Torque Specifications 5A2-19

GENERAL DESCRIPTION

The disc brake assembly consists of a caliper, piston, rotor, pad assembly and support bracket. The caliper assembly has a single bore and is mounted to the support bracket with 2 mounting bolts. The support bracket allows the caliper to move laterally against the rotor. The caliper is a one-piece casting with the inboard side containing the piston bore. A square cut rubber seal is located in a groove in the piston bore which provides the hydraulic seal between the piston and the cylinder wall.

NOTE:
- Replace all components included in repair kits used to service this caliper.
- Lubricate rubber parts with clean brake fluid to ease assembly.
- If any hydraulic component is removed or disconnected, it may be necessary to bleed all or part of the brake system.
- Replace pads in axle sets only.
- The torque values specified are for dry, unlubricated fasteners.
- Perform service operation a clean bench free from all mineral oil materials.

OPERATION

Hydraulic pressure, created by applying the brake pedal, is converted by the caliper to a stopping force. This force acts equally against the piston and the bottom of the caliper bore to move the piston outward and to move (slide) the caliper inward resulting in a clamping action on the rotor. This clamping action forces the linings against the rotor, creating friction to stop the vehicle.

Front disc brakes

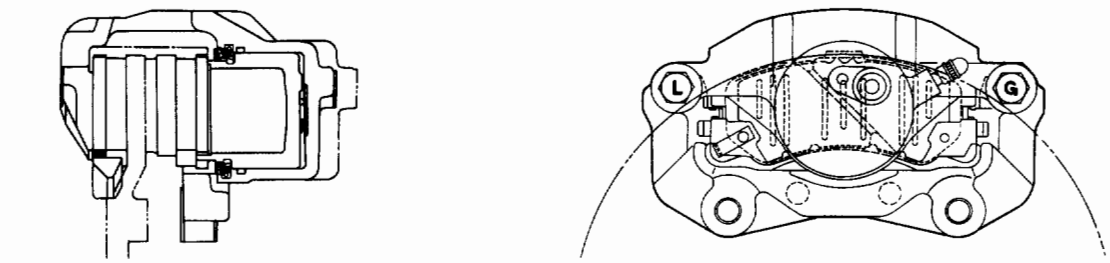

Rear disc brakes

Fig. 5A2-1

ON-VEHICLE SERVICE

FRONT DISC BRAKE

BRAKE PADS INSPECTION (Fig. 5A2-2)

Check the outer pad by looking at each caliper from above. Check the thickness on the inner pad by looking down through the inspection hole in the top of the caliper. Whenever the pad is worn to about the thickness of the pad base, the pad should be removed for further measurements. The pad should be replaced anytime the pad thickness (t) is worn to within 1.0 mm (0.039 in) of the pad itself.
The disc pads have a wear indicator that makes a noise when the pad wears to where replacement is required.

Minimum limit	mm (in)	1.0 (0.039)

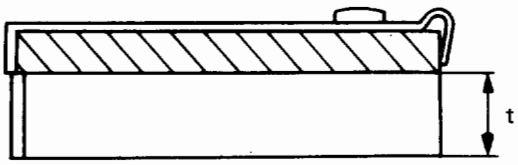

Fig. 5A2-2

BRAKE PADS REPLACEMENT

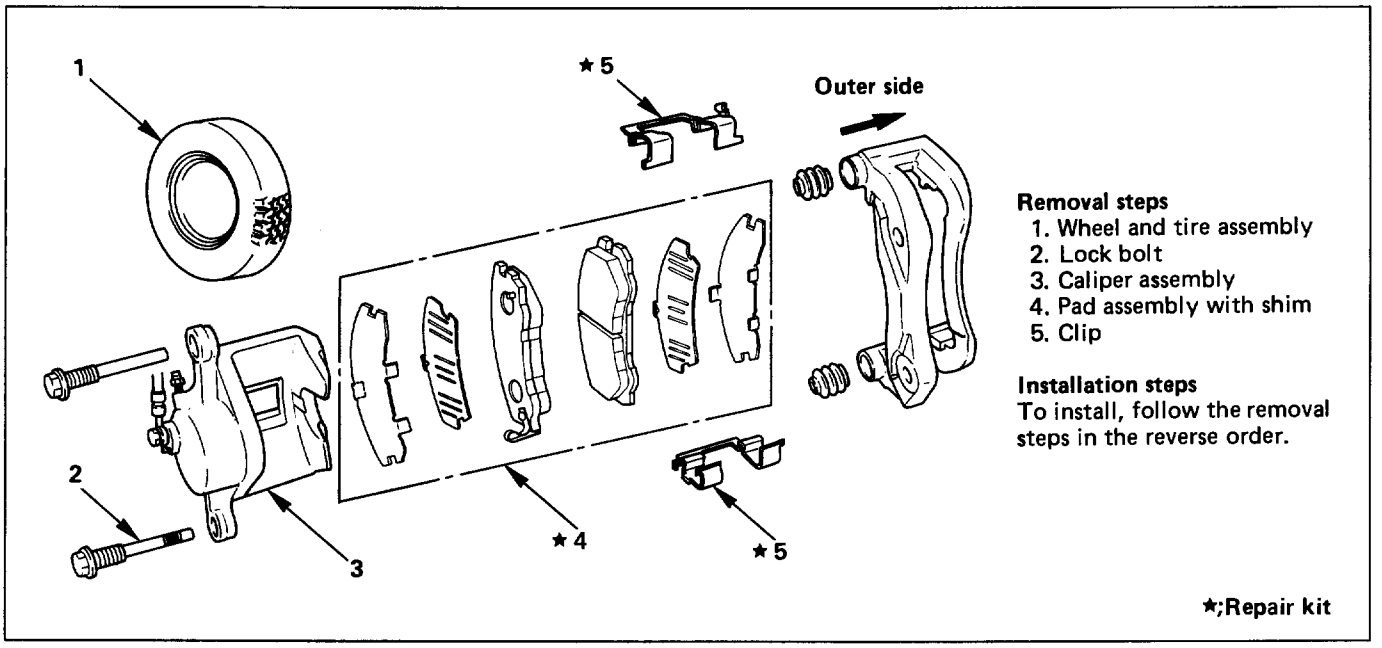

Fig. 5A2-3

REMOVAL

NOTE:
If a squealing noise occurs from the front brake while driving, check the pad wear indicator plate. If the indicator plate contacts the rotor, the disc pad assembly should be replaced.

- Draw out two-thirds of the brake fluid from the reservoir.
- Raise the vehicle and support it with suitable safety stands.

1. **Wheel and tire assembly**
   - Refer to "Wheels and Tires" in Section 3E.
2. **Lock bolt (Fig. 5A2-4)**
3. **Caliper assembly**
   - Support the caliper assembly so that the brake hose is not stretched or damaged.
4. **Pad assembly with shim**
5. **Clip**

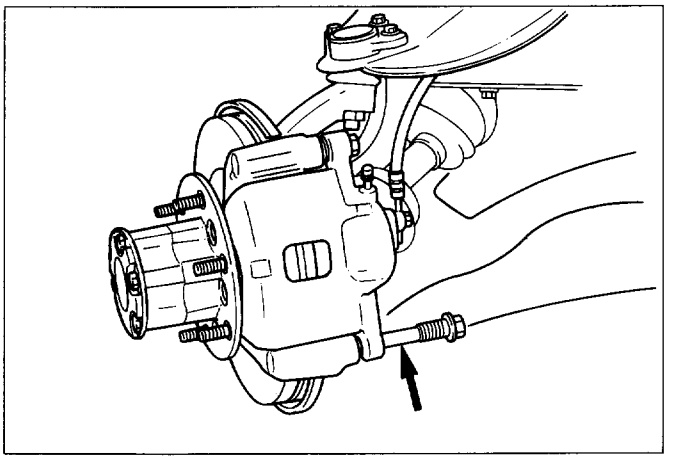

Fig. 5A2-4

INSTALLATION

5. **Clip (Fig. 5A2-5)**

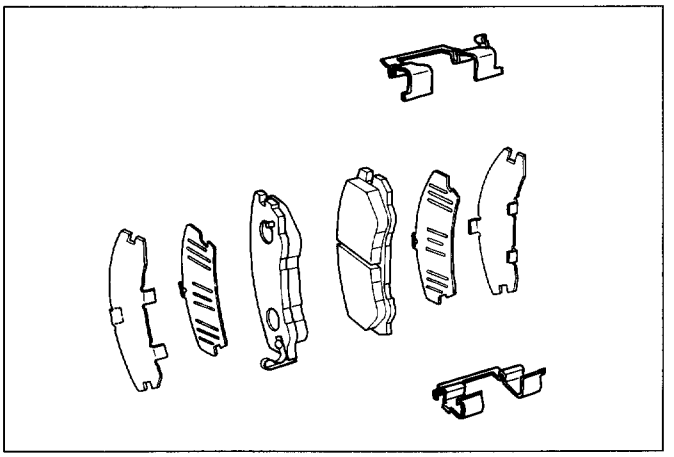

Fig. 5A2-5

4. **Pad assembly with shim (Fig. 5A2-6, 7)**
   - Apply special grease (approx 0.2 g) to both contacting surfaces of inner shims. Wipe off extruded grease after installing.

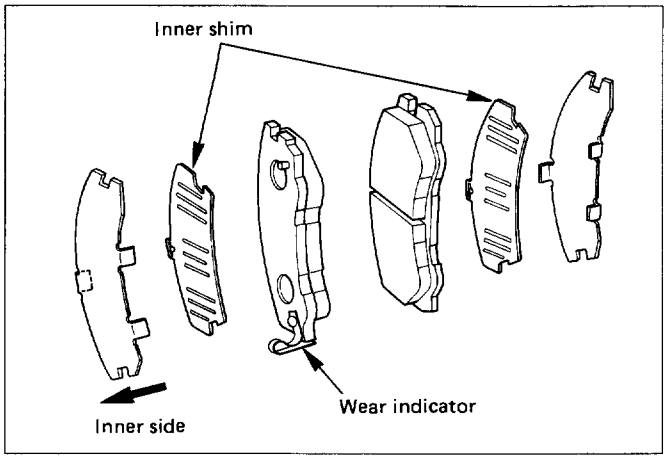

Fig. 5A2-6

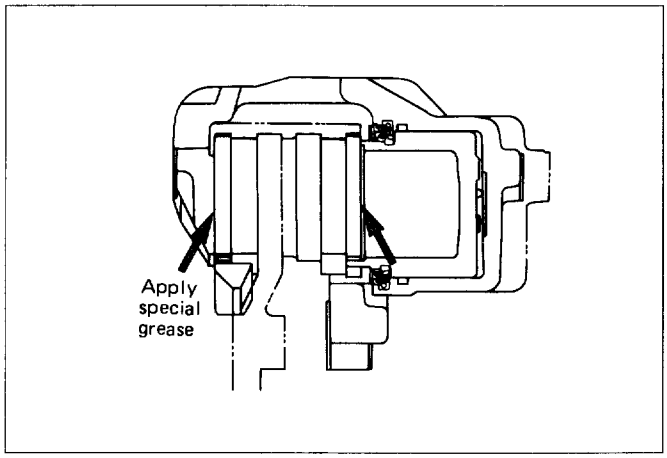

Fig. 5A2-7

3. **Caliper assembly (Fig. 5A2-8)**
   - Use adjustable pliers to bottom the piston into the caliper bore. Be careful not to damage the piston dust boot.
   - Do not damage the flexible hose by twisting or pulling it.

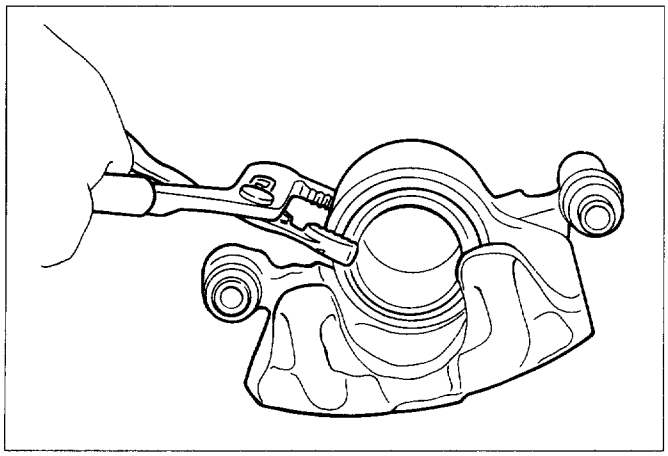

Fig. 5A2-8

2. **Lock bolt (Fig. 5A2-9)**

Torque N·m (lb·ft)	74 (54)

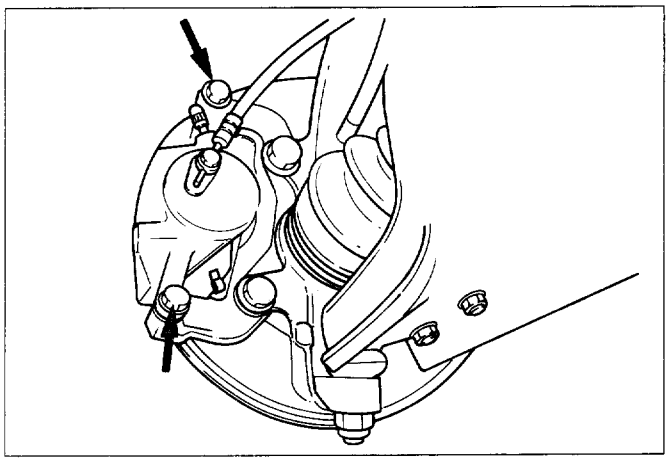

Fig. 5A2-9

1. **Wheel and tire assembly**
   - Refer to "Wheels and Tires" in Section 3E.
   - Pump the brake pedal several times to make sure that the pedal is firm. Check the brake fluid level in the reservoir after pumping the brakes.

SERVICING THE ROTOR

In the manufacturing of the brake rotor, all the tolerances regarding surface finish, parallelism and lateral runout are held very closely. The maintenance of these tolerances provide the surface necessary to assure smooth brake operation.

LATERAL RUNOUT

Lateral runout is the movement of the rotor from side to side as it rotates on the spindle. This could also be referred to as "rotor wobble".
This movement causes the piston to be knocked back into its bore. This results in additional pedal travel and a vibration during braking.

CHECKING LATERAL RUNOUT (Fig. 5A2-10)

1. Adjust the wheel bearing correctly.
   - Refer to "Front Drive Axle" in Section 4C.
2. Attach a dial indicator to some portion of the suspension so that the stem contacts the rotor face about 29 mm (1.14 in) from the rotor edge.
3. Move the rotor one complete rotation.
   - The lateral runout should not exceed 0.13 mm (0.005 in)

Maximum runout	mm (in)	0.13 (0.005)

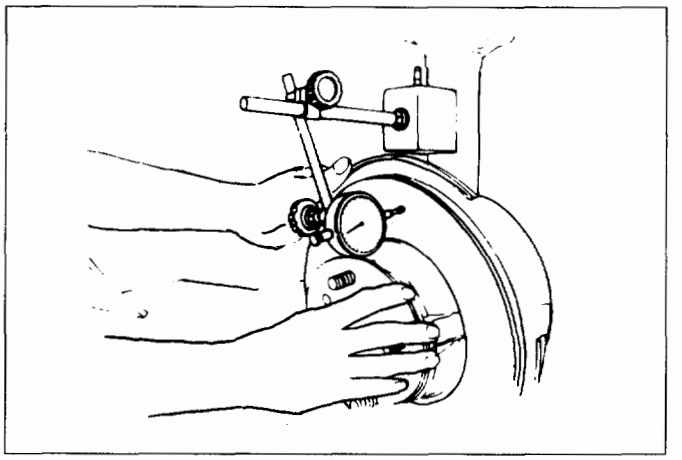

Fig. 5A2-10

PARALLELISM (Fig. 5A2-11)

Parallelism is the measurement of the thickness of the rotor at four or more points around the circumference of the rotor. All measurement must be made at 29 mm (1.14 in) from the edge of the rotor.
The rotor thickness must not vary more than 0.010 mm (0.0004 in) from point to point.

Maximum parallelism	mm (in)	0.010 (0.0004)

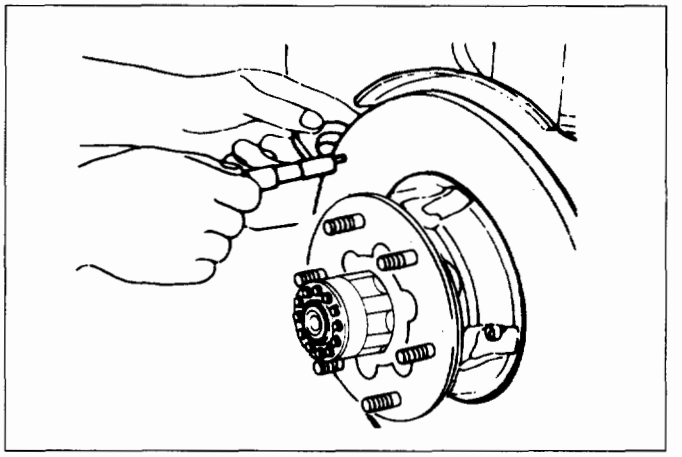

Fig. 5A2-11

REPLACING BRAKE ROTORS

When installing new brake rotors, do not refinish the surfaces. These parts are at the correct level of surface finish.

REFINISHING BRAKE ROTORS (Fig. 5A2-12)

Accurate control of the rotor tolerances is necessary for proper performance of the disc brakes. Machining of the rotor should be done only with precision equipment. All brake rotors have a minimum thickness dimension cast into them. This dimension is the minimum wear dimension and not a refinish dimension. The minimum wear dimension is 24.60 mm (0.969 in). The minimum refinish dimension is 24.97 mm (0.983 in).
When refinishing rotors, always use sharp cutting tools or bits. Dull or worn tools leave a poor surface finish which will affect initial braking performance. Vibration dampening attachments should always be used when refinishing braking surfaces. These attachments eliminate tool chatter and will result in better surface finish.
After refinishing, replace any rotor that does not meet the minimum thickness of 24.97 mm (0.983 in). Do not use a brake rotor that will not meet the specification.

Minimum wear dimension	mm (in)	24.60 (0.969)
Refinish dimension	mm (in)	24.97 (0.983)

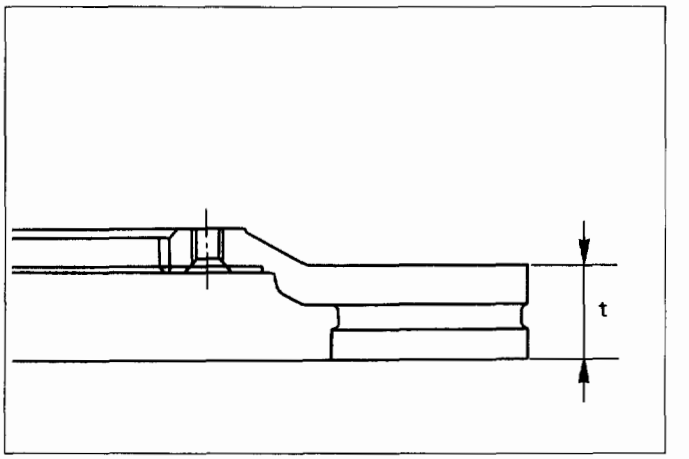

Fig. 5A2-12

REBUILDING THE CALIPER

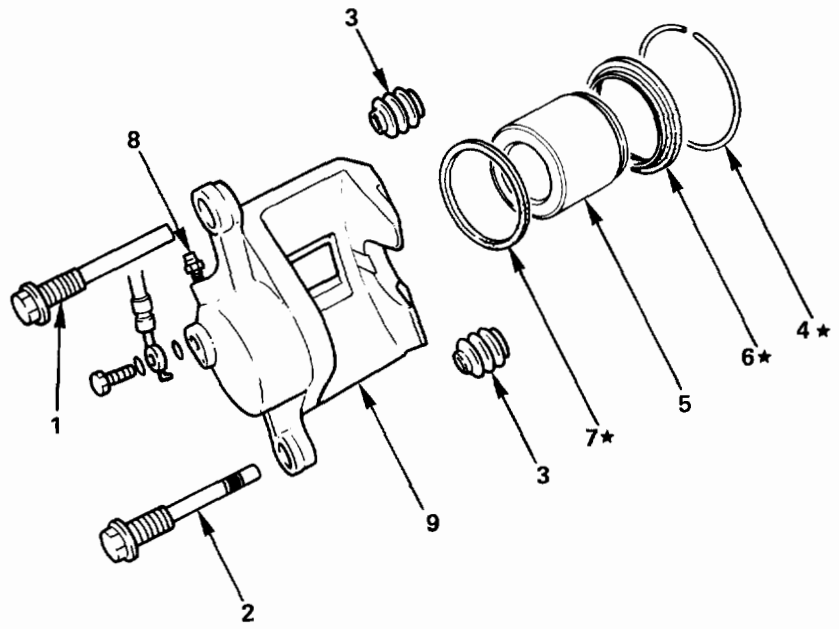

Disassembly steps
1. Guide bolt
2. Lock bolt
3. Dust boot; guide bolt and lock bolt
4. Dust boot ring
5. Piston
6. Dust boot; piston
7. Piston seal
8. Bleeder with cap
9. Caliper body

Reassembly steps
9. Caliper body
8. Bleeder with cap
7. Piston seal
5. Piston
6. Dust boot; piston
4. Dust boot ring
3. Dust boot; guide bolt and lock bolt
2. Lock bolt
1. Guide bolt

★;Repair kit

Fig. 5A2-21

DISASSEMBLY

1. **Guide bolt**
2. **Lock bolt**
3. **Dust boot; guide bolt and lock bolt**
4. **Dust boot ring (Fig. 5A2-22)**
   - Using a small screwdriver, remove the dust boot ring.

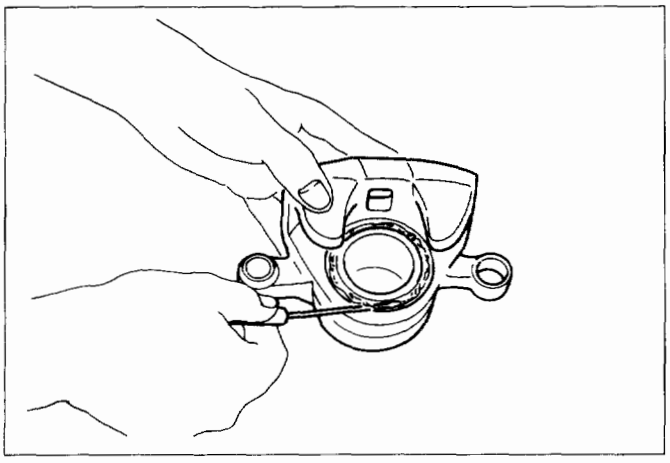

Fig. 5A2-22

5. **Piston**
   - Insert a block of wood into the caliper and force out the piston by blowing compressed air into the caliper at the flexible hose attachment. This procedure must be done prior to removal of dust boot (Fig. 5A2-23).

WARNING:
Do not place your fingers in front of the piston in an attempt to catch or protect it when applying compressed air. This could result in personal injury.

CAUTION:
Use just enough air to ease the piston out of the bore. If the piston is blown out, it may be damaged.

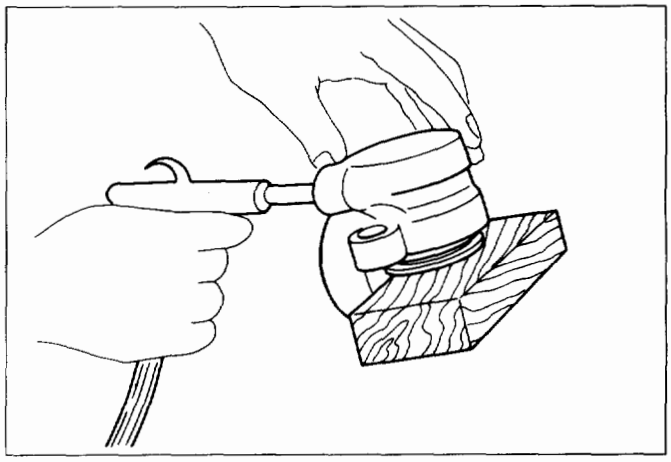

Fig. 5A2-23

6. **Dust boot; piston**
7. **Piston seal**
8. **Bleeder with cap**
9. **Caliper body**

INSPECTION AND REPAIR

Make necessary parts replacement, if wear, damage, corrosion or any other abnormal conditions are found through inspection.
Check the following parts;

- Rotor
- Cylinder body
- Cylinder bore
- Piston
- Guide bolt, Lock bolt
- Support bracket

NOTE:
The piston seal, boot ring and dust boot are to be replaced each time the caliper is overhauled. Discard these used rubber parts and replace with new ones.

REASSEMBLY

9. Caliper body

8. Bleeder with cap

Torque N·m (lb·in)	8 (69)

7. Piston seal (Fig. 5A2-24)

- Apply special rubber grease to the piston seal and cylinder wall, then insert the piston seal into the cylinder. The special rubber grease is included in the repair kit.

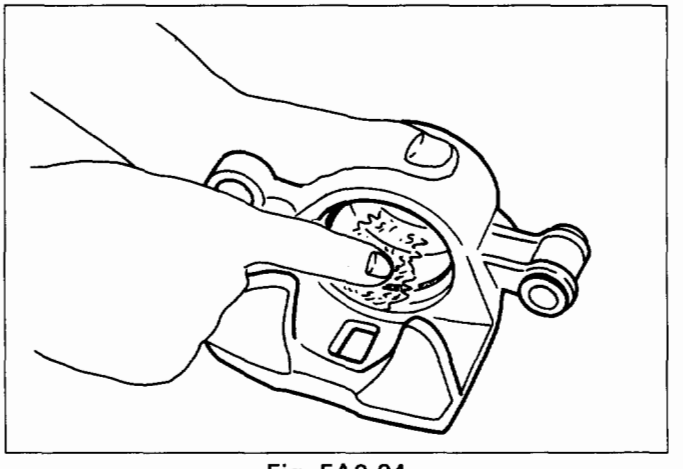

Fig. 5A2-24

5. Piston

6. Dust boot; piston (Fig. 5A2-25)

- When inserting the piston into the cylinder, use finger pressure only. Do not use a mallet or other impact tools, since damage to the cylinder wall or piston seal can result.

4. Dust boot ring (Fig. 5A2-26)

- Apply special grease (Approx. 1g) to the piston and attach the dust boot to the piston and caliper. Insert the dust boot ring into the dust boot.

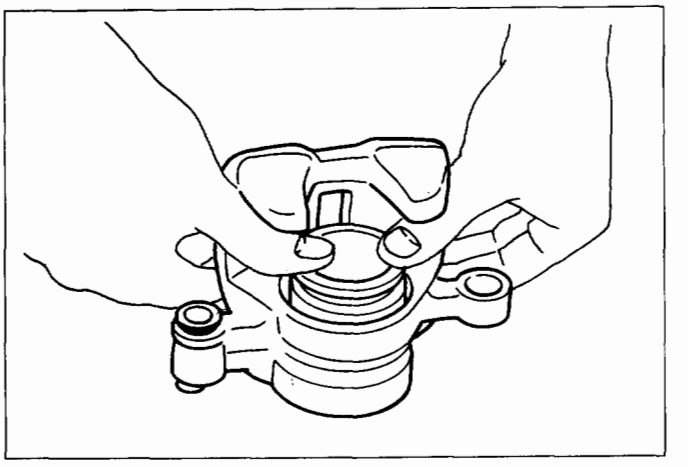

Fig. 5A2-25

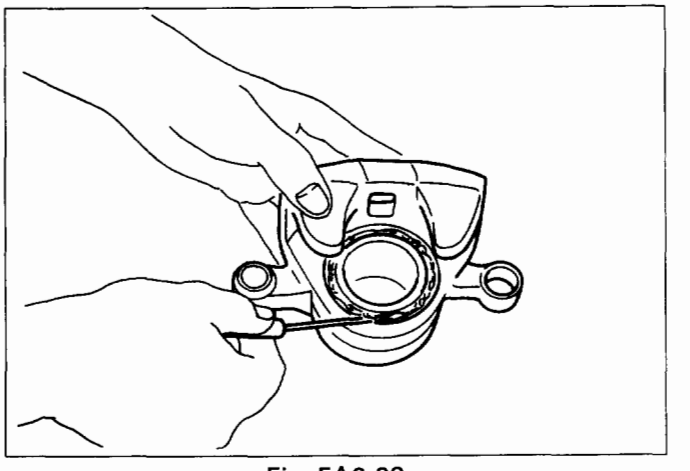

Fig. 5A2-26

3. Dust boot; guide bolt and lock bolt

2, 1. Lock bolt and guide bolt (Fig. 5A2-27)

Torque N·m (lb·ft)	74 (54)

- Install the dust boot on the support bracket after applying special grease (Approx. 1g) onto the dust boot inner surface. Also apply special grease onto the lock bolt and guide bolt setting hole of the support bracket.

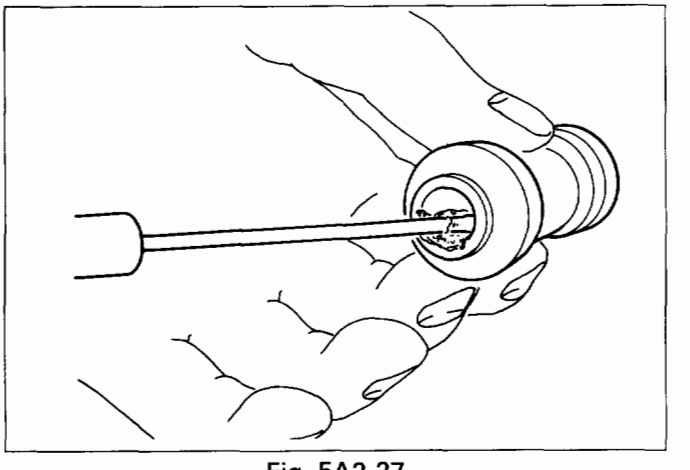

Fig. 5A2-27

REAR DISC BRAKE

BRAKE PADS INSPECTION (Fig. 5A2-28)

Check the outer pad by looking at each caliper from above. Check the thickness on the inner pad by looking down through the inspection hole in the top of the caliper. Whenever the pad is worn to about the thickness of the pad base, the pad should be removed for further measurements. The pad should be replaced anytime the pad thickness (t) is worn to within 1.0 mm (0.039 in) of the pad itself.
The disc pads have a wear indicator that makes a noise when the pad wear to a degree where replacement is required.

Minimum limit	mm (in)	1.0 (0.039)

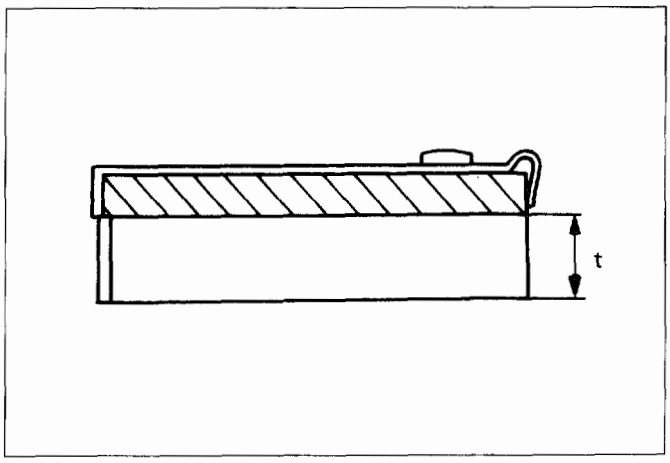

Fig. 5A2-28

BRAKE PADS REPLACEMENT

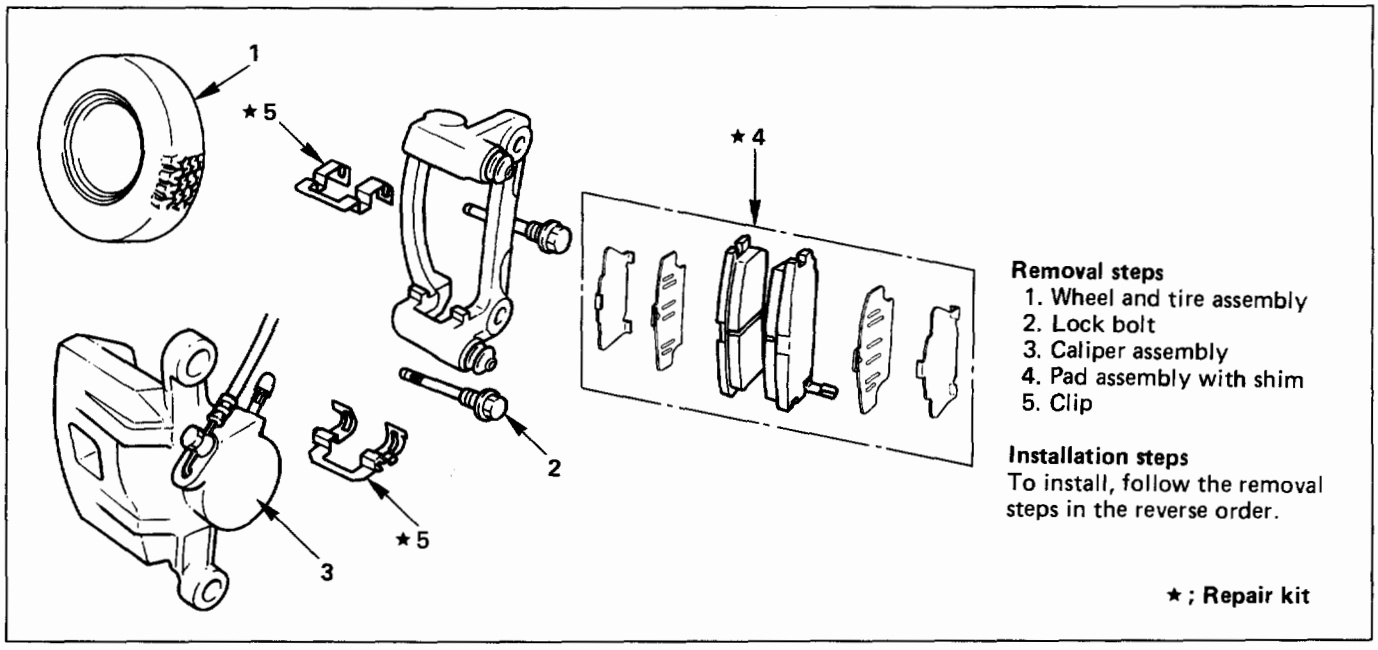

Removal steps
1. Wheel and tire assembly
2. Lock bolt
3. Caliper assembly
4. Pad assembly with shim
5. Clip

Installation steps
To install, follow the removal steps in the reverse order.

★ ; Repair kit

Fig. 5A2-29

REMOVAL

NOTE:
If a squealing noise occurs from the rear brake while driving, check the pad wear indicator plate. If the indicator plate contacts the rotor, the disc pad assembly should be replaced.

- Draw out two-thirds of the brake fluid from the reservoir.
- Raise the vehicle and support it with suitable safety stands.

1. **Wheel and tire assembly**
   - Refer to "Wheels and Tires" in Section 3E.
2. **Lock bolt (Fig. 5A2-30)**

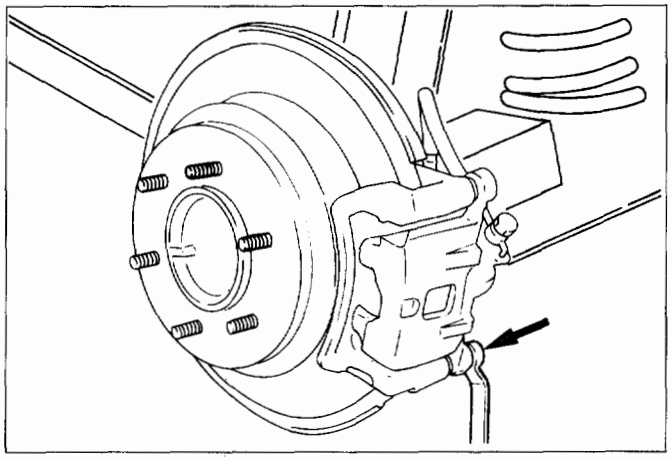

Fig. 5A2-30

3. **Caliper assembly**
   - Support the caliper assembly so that the brake hose is not stretched or damaged.
4. **Pad assembly with shim**
5. **Clip**

INSTALLATION

5. **Clip (Fig. 5A2-31)**

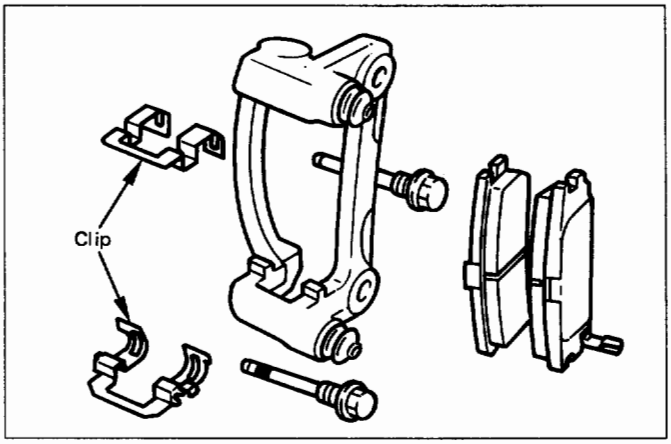

Fig. 5A2-31

4. **Pad assembly with shim (Fig. 5A2-32, 33)**
   - Apply special grease (approx 0.2g) to both contacting surfaces of inner shims. Wipe off extruded grease after installing.

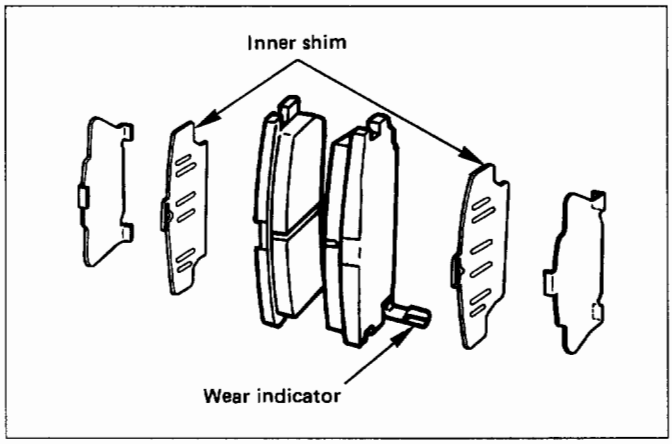

Fig. 5A2-32

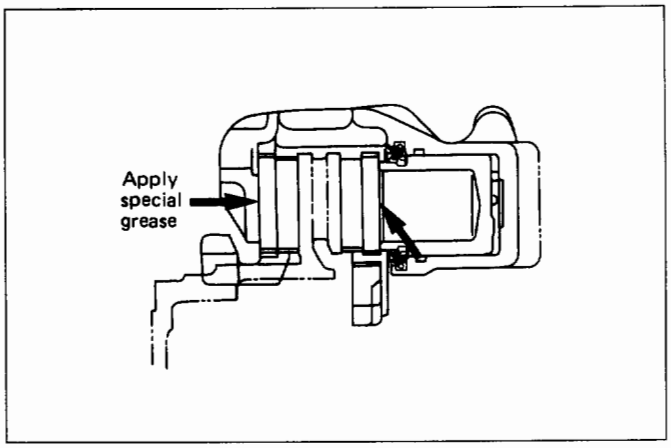

Fig. 5A2-33

3. **Caliper assembly (Fig. 5A2-34)**
   - Use adjustable pliers to bottom the piston into the caliper bore. Be careful not to damage the piston dust boot.
   - Do not damage the flexible hose by twisting or pulling it.

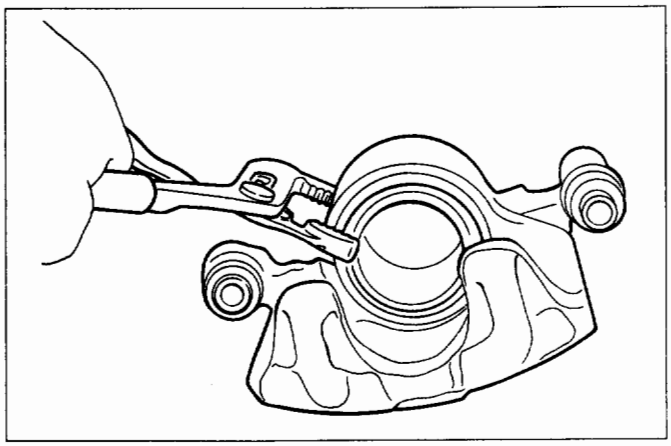

Fig. 5A2-34

2. **Lock bolt (Fig. 5A2-35)**

	Torque N·m (lb·ft)	44 (32)

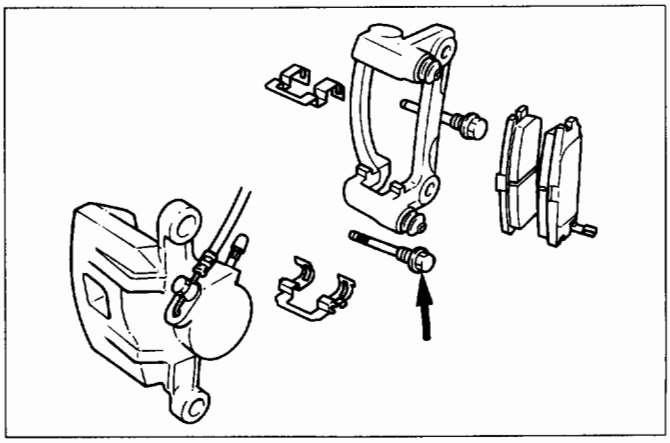

Fig. 5A2-35

1. **Wheel and tire assembly**
   - Refer to "Wheels and Tires" in Section 3E.
   - Pump the brake pedal several times to make sure that the pedal is firm. Check the brake fluid level in the reservoir after pumping the brakes.

SERVICING THE ROTOR

In the manufacturing of the brake rotor, all the tolerances regarding surface finish, parallelism and lateral runout are held very closely. The maintenance of these tolerances provide the surface necessary to assure smooth brake operation.

LATERAL RUNOUT

Lateral runout is the movement of the rotor from side to side as it rotates on the spindle. This could also be referred to as "rotor wobble".
This movement causes the piston to be knocked back into its bore. This results in additional pedal travel and a vibration during braking.

CHECKING LATERAL RUNOUT (Fig. 5A2-36)

1. Attach a dial indicator to some portion of the suspension so that the stem contacts the rotor face about 22 mm (0.87 in) from the rotor edge.
2. Move the rotor one complete rotation.
   - The lateral runout should not exceed 0.13 mm (0.005 in)

Maximum runout mm (in)	0.13 (0.005)

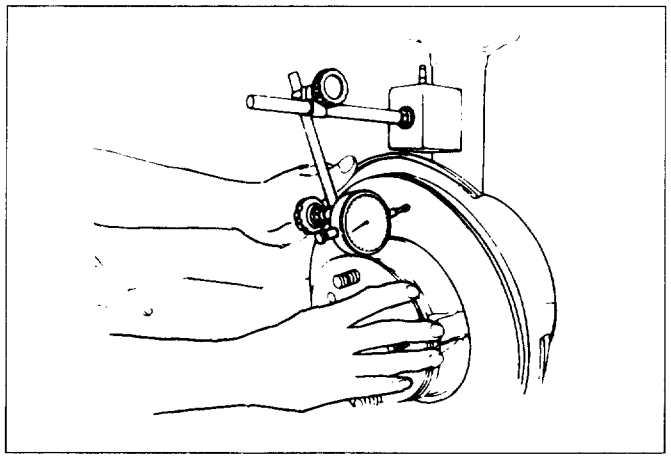

Fig. 5A2-36

PARALLELISM (Fig. 5A2-37)

Parallelism is the measurement of the thickness of the rotor at four or more points around the circumference of the rotor. All measurements must be made at 22 mm (0.87 in) from the edge of the rotor.
The rotor thickness must not vary more than 0.010 mm (0.0004 in) from point to point.

Maximum parallelism variation mm (in)	0.010 (0.0004)

REPLACING BRAKE ROTORS

When installing new brake rotors, do not refinish the surfaces. These parts are at the correct level of surface finish.

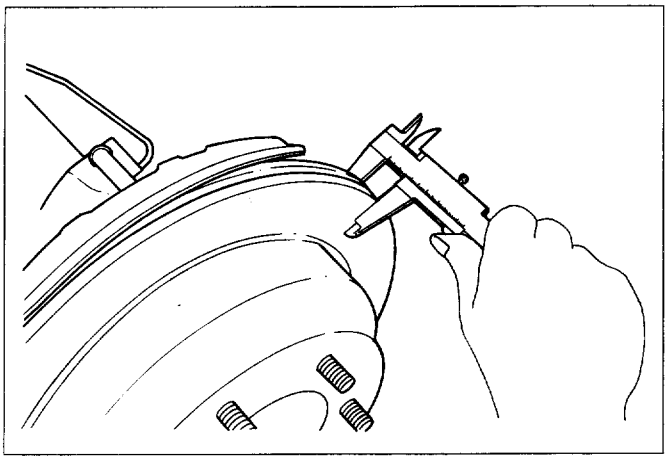

Fig. 5A2-37

REFINISHING BRAKE ROTORS (Fig. 5A2-38)

Accurate control of the rotor tolerances is necessary for proper performance of the disc brakes. Machining of the rotor should be done only with precision equipment. All brake rotors have a minimum thickness dimension cast into them. This dimension is the minimum wear dimension and not a refinish dimension. The minimum wear dimension is 16.6 mm (0.654 in). The refinish dimension is 16.97 mm (0.668 in).

When refinishing rotors, always use sharp cutting tools or bits. Dull or worn tools leave a poor surface finish which will affect initial braking performance. Vibration dampening attachments should always be used when refinishing braking surfaces. These attachments eliminate tool chatter and will result in better surface finish.

After refinishing, replace any rotor does not meet the minimum thickness of 16.97 mm (0.668 in). Do not use a brake rotor that will not meet the specification.

Minimum wear dimension	mm (in)	16.6 (0.654)
Refinish dimension	mm (in)	16.97 (0.668)

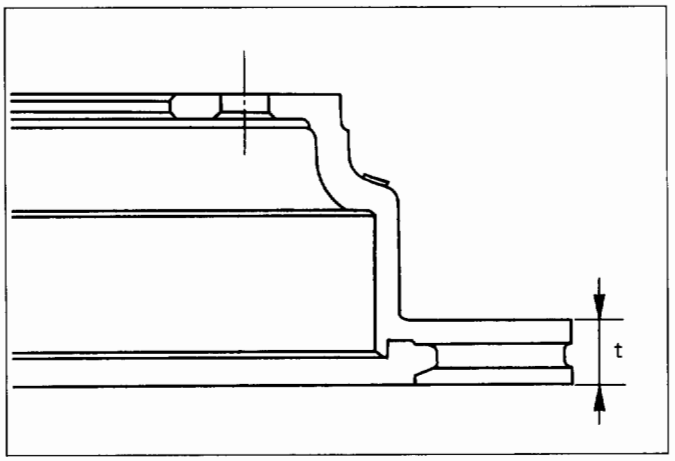

Fig. 5A2-38

Rear Drum (in Disc) Inside Diameter Check (Fig. 5A2-39)

Check the rear drum inside diameter by mesuring at more than two portions as shown in Fig. 5A2-39.

If the inside diameter is greater than the limit, replace the rear rotor.

Rear Drum Inside Diameter

Standard	mm (in)	210.0 (8.27)
Limit	mm (in)	211.4 (8.32)

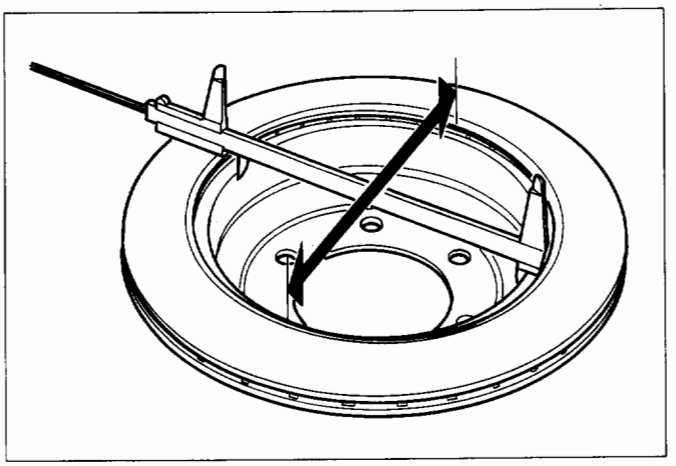

Fig. 5A2-39

CALIPER REPLACEMENT

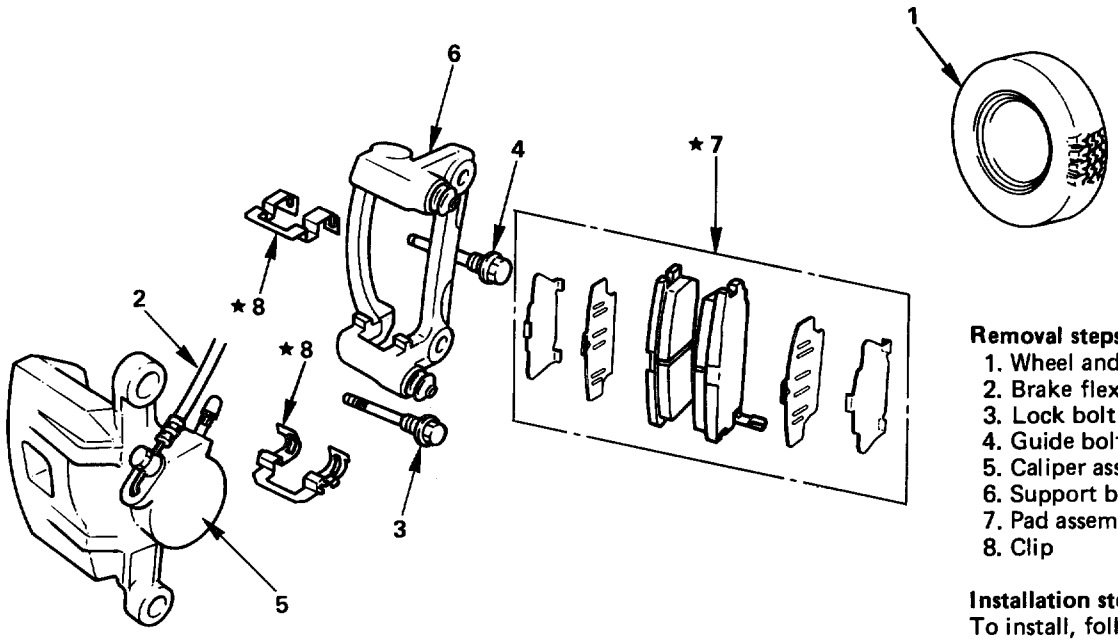

Removal steps
1. Wheel and tire assembly
2. Brake flexible hose
3. Lock bolt
4. Guide bolt
5. Caliper assembly
6. Support bracket
7. Pad assembly with shim
8. Clip

Installation steps
To install, follow the removal steps in the reverse order.

★;Repair kit

Fig. 5A2-40

REMOVAL

- Raise the vehicle and support with suitable safety stands.

1. **Wheel and tire assembly**
   - Refer to "Wheels and Tires" in Section 3E.
2. **Brake flexible hose (Fig. 5A2-41)**
   - Remove the bolt and gaskets, then disconnect the flexible hose from the caliper.
   - After disconnecting the flexible hose, cap or tape the openings to prevent entry of foreign material.
   - Since the brake fluid flows out from the connecting coupler, place a drain pan under the vehicle.

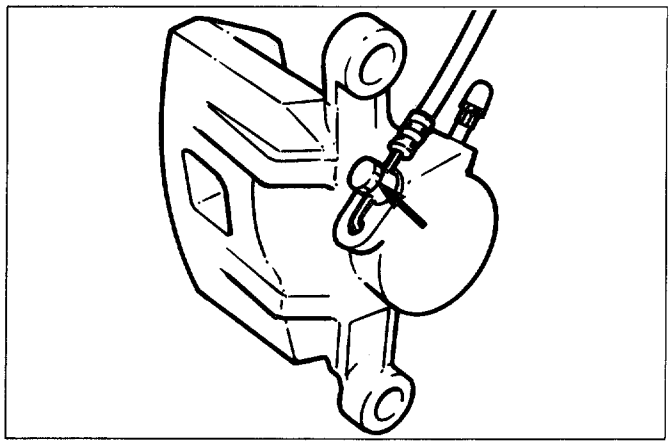

Fig. 5A2-41

3. **Lock bolt (Fig. 5A2-42)**
4. **Guide bolt (Fig. 5A2-42)**

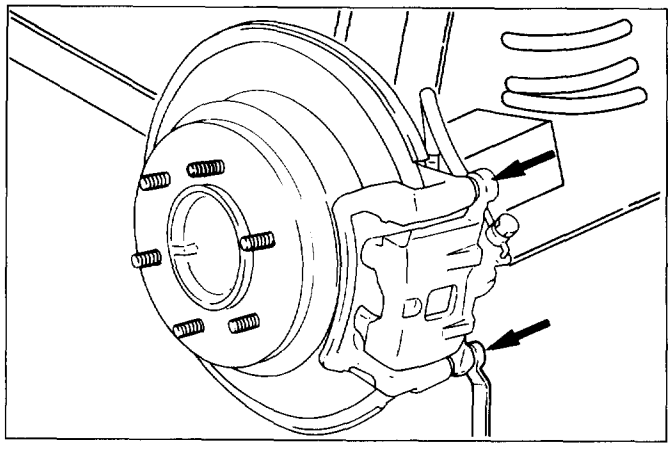

Fig. 5A2-42

5. **Caliper assembly**
6. **Support bracket**
   - Take care not to damage the flexible brake hose when removing the support bracket.
7. **Pad assembly with shim**
   - Mark the lining locations if they are to be reinstalled.
8. **Clip**

INSTALLATION

8. **Clip (Fig. 5A2-43)**

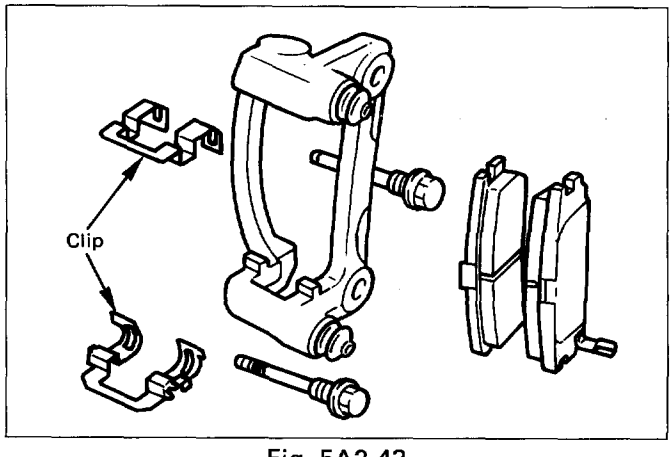

Fig. 5A2-43

7. **Pad assembly with shim (Fig. 5A2-44)**
   - Apply special grease (approx. 0.2g) to both contacting surfaces of inner shims. Wipe off extruded grease after installing.

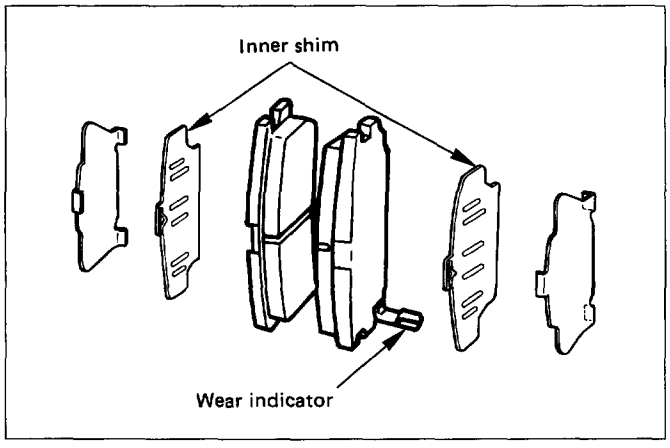

Fig. 5A2-44

6. **Support bracket (Fig. 5A2-45)**

Torque N·m (lb·ft)	148 (109)

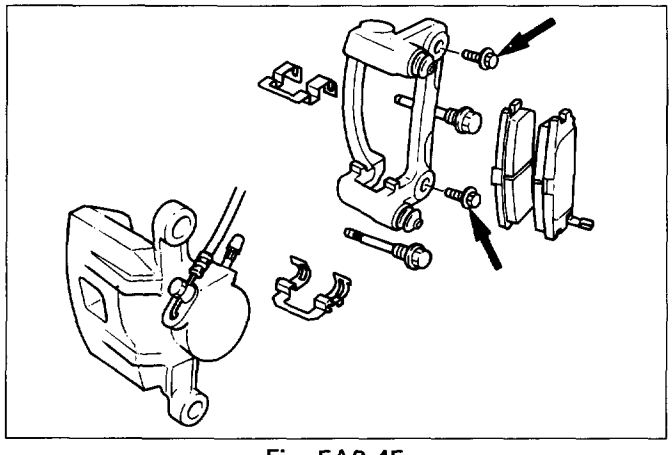

Fig. 5A2-45

5. **Caliper assembly**
4. **Guide bolt (Fig. 5A2-46)**
3. **Lock bolt (Fig. 5A2-46)**

Torque N·m (lb·ft)	44 (32)

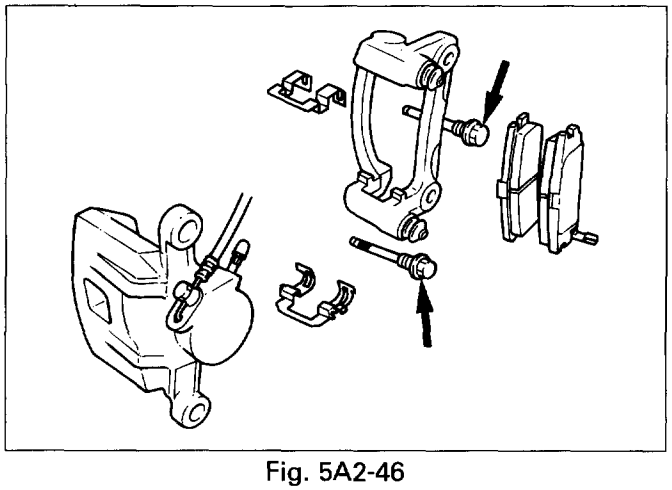

Fig. 5A2-46

2. **Brake flexible hose (Fig. 5A2-47)**
   - Always use new gaskets.
   - Be sure to put the hooked edge of the flexible hose end into the anti-rotation cavity.

	Torque N·m (lb·ft)	35 (26)

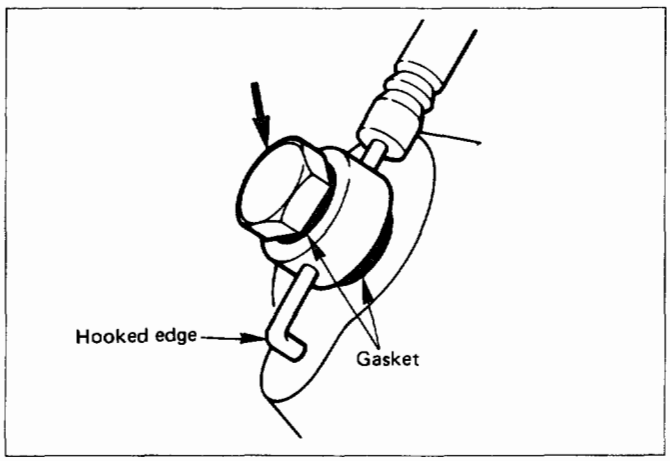

Fig. 5A2-47

1. **Wheel and tire assembly**
   - Refer to "Wheels and Tires" in Section 3E.
   - Bleed brakes. Refer to "Hydraulic Brakes" in Section 5A.

REBUILDING THE CALIPER

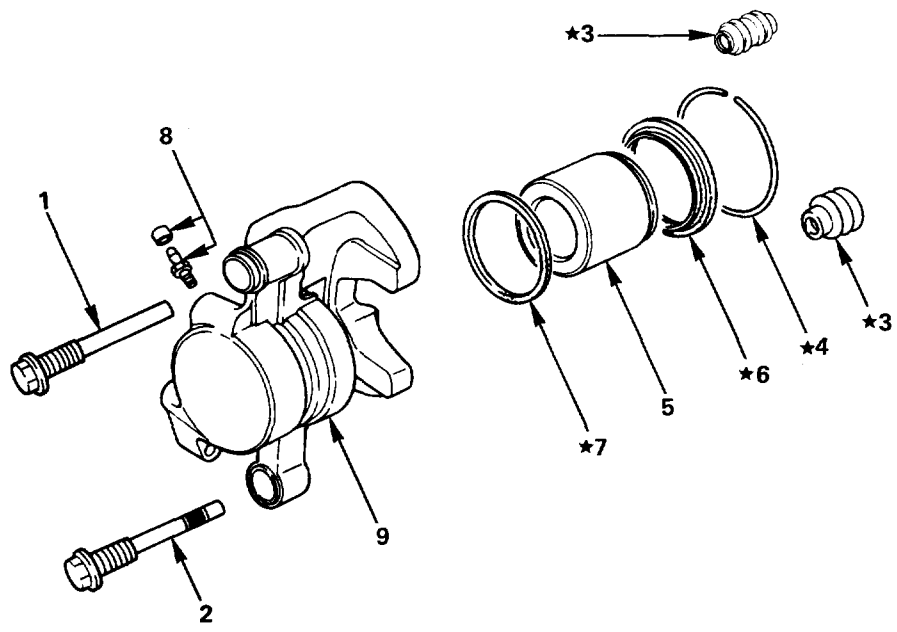

Disassembly steps
1. Guide bolt
2. Lock bolt
3. Dust boot; guide bolt and lock bolt
4. Dust boot ring
5. Piston
6. Dust boot; piston
7. Piston seal
8. Bleeder with cap
9. Caliper body

Reassembly steps
9. Caliper body
8. Bleeder with cap
7. Piston seal
5. Piston
6. Dust boot; piston
4. Dust boot ring
3. Dust boot; guide bolt and lock bolt
2. Lock bolt
1. Guide bolt

★;Repair kit

Fig. 5A2-48

DISASSEMBLY

1. **Guide bolt**
2. **Lock bolt**
3. **Dust boot**
4. **Dust boot ring (Fig. 5A2-49)**
   - Using a small screwdriver, remove the dust boot ring.

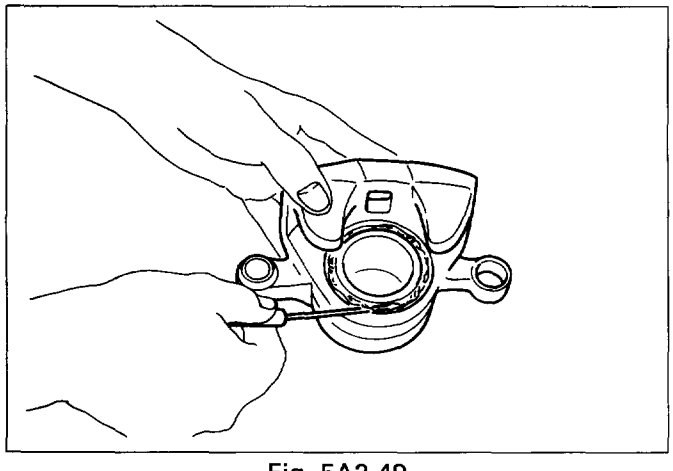

Fig. 5A2-49

5. **Piston**
   - Insert a block of wood into the caliper and force out the piston by blowing compressed air into the caliper at the flexible hose attachment. This procedure must be done prior to removal of dust boot (Fig. 5A2-50).

WARNING:
Do not place your fingers in front of the piston in an attempt to catch or protect it when applying compressed air. This could result in personal injury.

CAUTION:
Use just enough air to ease the piston out of the bore. If the piston is blown out, it may be damaged.

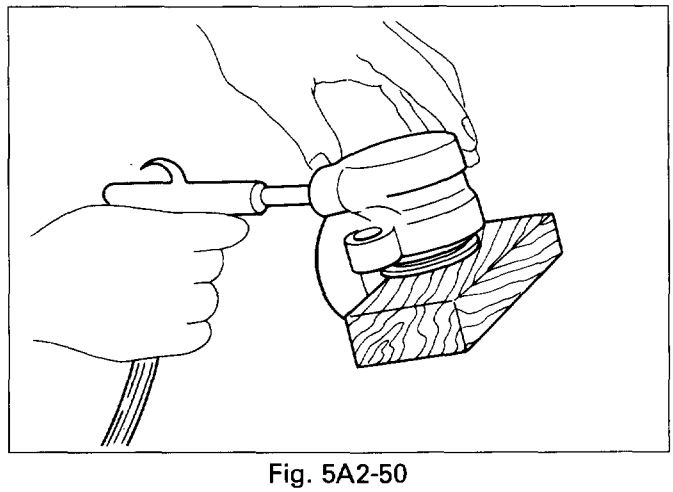

Fig. 5A2-50

6. **Dust boot; piston**
7. **Piston seal**
8. **Bleeder with cap**
9. **Caliper body**

INSPECTION AND REPAIR

Make necessary parts replacement, if wear, damage, corrosion or any other abnormal conditions are found through inspection.
Check the following parts;

- Rotor
- Cylinder body
- Cylinder bore
- Piston
- Slide pin
- Support bracket

NOTE:
The piston dust seal and dust boot are to be replaced each time the caliper is overhauled. Discard these used rubber parts and replace with new ones.

REASSEMBLY

9. Caliper body

8. Bleeder with cap

Torque N·m (lb·in)	8 (69)

7. Piston seal (Fig. 5A2-51)

- Apply special rubber grease to the piston seal and cylinder wall, then insert the piston seal into the cylinder. The special rubber grease is included in the repair kit.

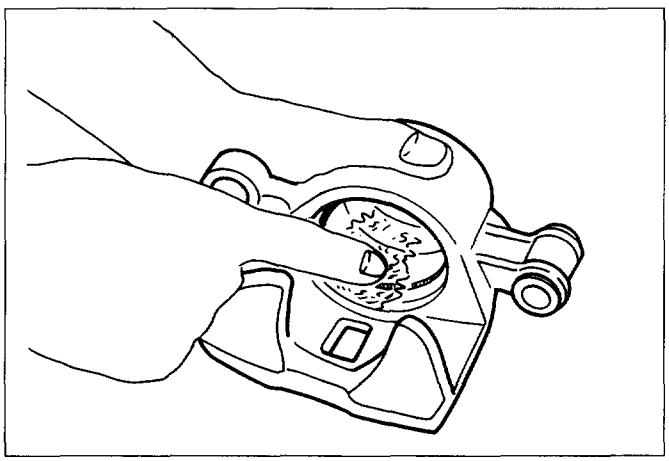

Fig. 5A2-51

5. Piston

6. Dust boot; piston (Fig. 5A2-52)

- When inserting the piston into the cylinder, use finger pressure only. Do not use a mallet or other impact tools, since damage to the cylinder wall or piston seal can result.

4. Dust boot ring (Fig. 5A2-53)

- Apply special grease (Approx. 1g) to the piston and attach the dust boot to the piston and caliper. Insert the dust boot ring into the dust boot.

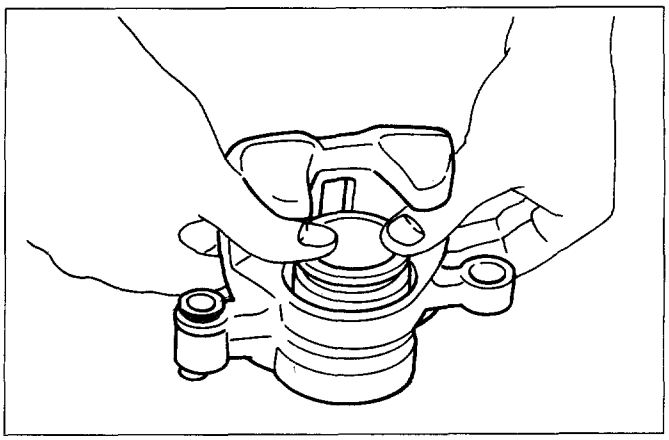

Fig. 5A2-52

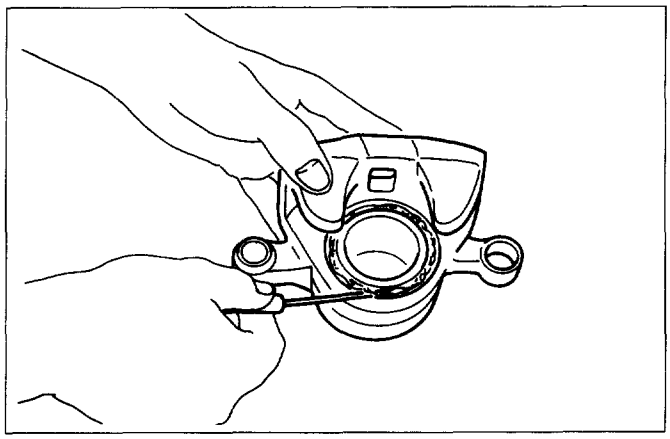

Fig. 5A2-53

3. Dust boot (Fig. 5A2-54)

- Install the dust boot on the support bracket after applying special grease (Approx. 1g) onto the dust boot inner surface. Also apply special grease onto the lock bolt and guide bolt setting hole of the support bracket.

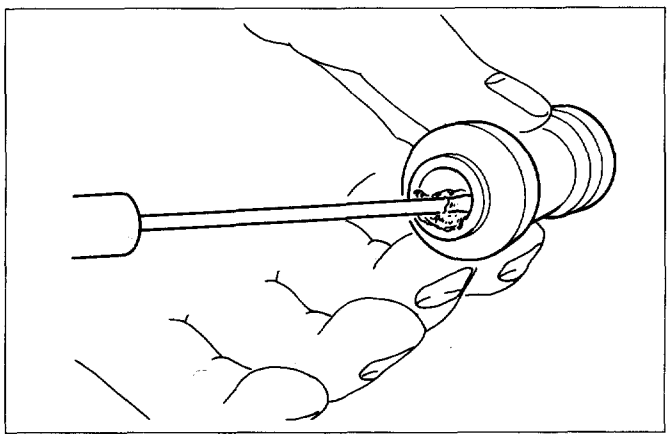

Fig. 5A2-54

2. Lock bolt

1. Guide bolt

Torque N·m (lb·ft)	44 (32)

MAIN DATA AND SPECIFICATIONS

GENERAL SPECIFICATIONS

Front disc brake		
Type		Floating, pin slide
Pad dimension	cm^2 (in^2)	55 (8.52)
Adjusting method		Self-adjusting
Piston diameter	mm (in)	60.33 (2.38)
Disc type		Ventilated
Disc thickness	mm (in)	26 (1.02)
Disc effective diameter	mm (in)	222 (8.74)
Rear disc brake		
Type		Floating, pin slide
Pad dimension	cm^2 (in^2)	33 (5.11)
Adjusting method		Self-adjusting
Piston diameter	mm (in)	41.3 (1.63)
Disc type		Ventilated
Disc thickness	mm (in)	18 (0.71)
Disc effective diameter	mm (in)	269.2 (10.60)

TORQUE SPECIFICATIONS

N·m (lb·ft)

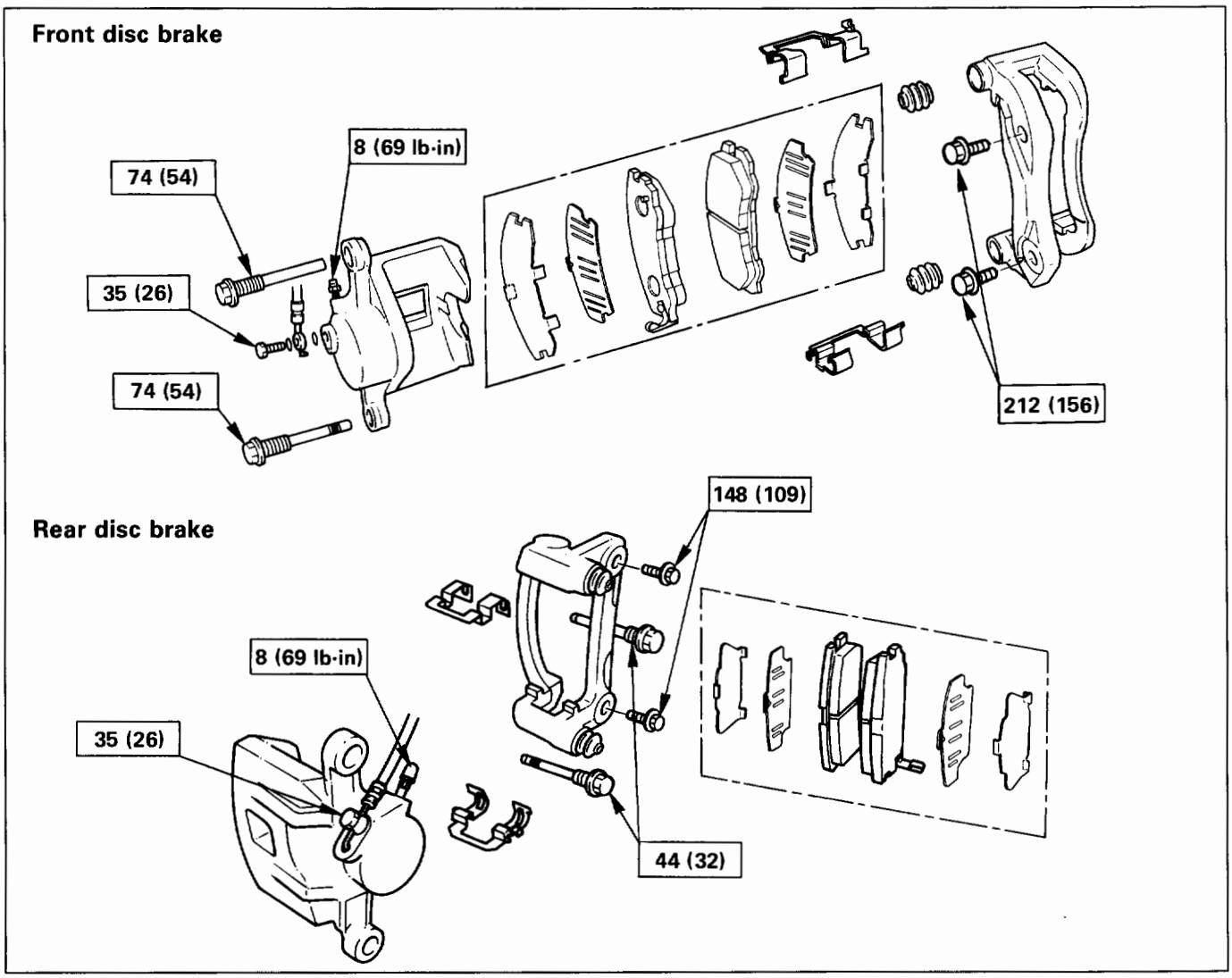

Fig. 5A2-55

MEMO

SECTION 5A3

REAR WHEEL ANTILOCK BRAKE SYSTEM (RWAL)

CAUTION:
All brake attaching fasteners are an important attaching part in that they could affect performance of vital parts and systems, and/or could result in major repair expense. They must be replaced with one of the same part number or with an equivalent part if replacement becomes necessary. Do not use replacement parts of lesser quality or substitute design. Torque values must be used as specified during reassembly to assure proper retention of these parts.

CONTENTS

Introduction 5A3- 1
General Description 5A3- 1
Rear Wheel Antilock (RWAL) Control Parts Location 5A3- 5
System Diagram 5A3- 6
Rear Wheel Antilock (RWAL) System Diagnostics 5A3- 7
On-Vehicle Service 5A3-38
RWAL Electronic Brake Control Module (EBCM) Replacement 5A3-38
Antilock (Isolation/Dump) Valve Replacement 5A3-39
Speed Sensor Replacement 5A3-40
Main Data and Specifications 5A3-41
Torque Specifications 5A3-41

INTRODUCTION

This section deals with the complete diagnosis and services for vehicles equipped with rear wheel antilock. For service information regarding all other components of the brake system, refer to "Hydraulic Brakes" (Sec. 5A), "Brake Booster System" (Sec. 5A1) or "Disc Brakes" (Sec. 5A2) of this Manual.

GENERAL DESCRIPTION

The rear wheel antilock system (RWAL) is designed to reduce rear wheel lock-up during a severe brake application, thus maintaining rear end stability. The system functions by regulating the rear hydraulic brake line pressure. The pressure regulation is accomplished by an antilock valve which is located on the front right side of engine room. The antilock valve is made up of two valves, a dump valve which releases pressure into an accumulator and an isolation valve which maintains rear brake pressure. The valve is controlled by a microcomputer which is part of the Electronic Brake Control Module (EBCM).

The EBCM is mounted at the front of the center console. Under severe brake application, as pressure is applied to the brake pedal, the EBCM is designed to permit the valve to do one of three functions or a combination of all three. The EBCM will allow the valve to either maintain the same amount of hydraulic pressure, release hydraulic pressure through the dump valve into the accumulator or increase the pressure by pulsing the isolation valve.

The EBCM operates by receiving signals from the speed sensor (which is located in the differential carrier), combination valve and the brake light switch. The RWAL system is connected to the RWAL indicator light located on the dash. An indication of the RWAL operation and a bulb check is performed each time the ignition is turned "ON". The indicator light will remain on for about two seconds. A RWAL system malfunction is indicated if the RWAL indicator light stays on, or comes on during driving. To determine the specific trouble, refer to "RWAL System Diagnostics" in this section.

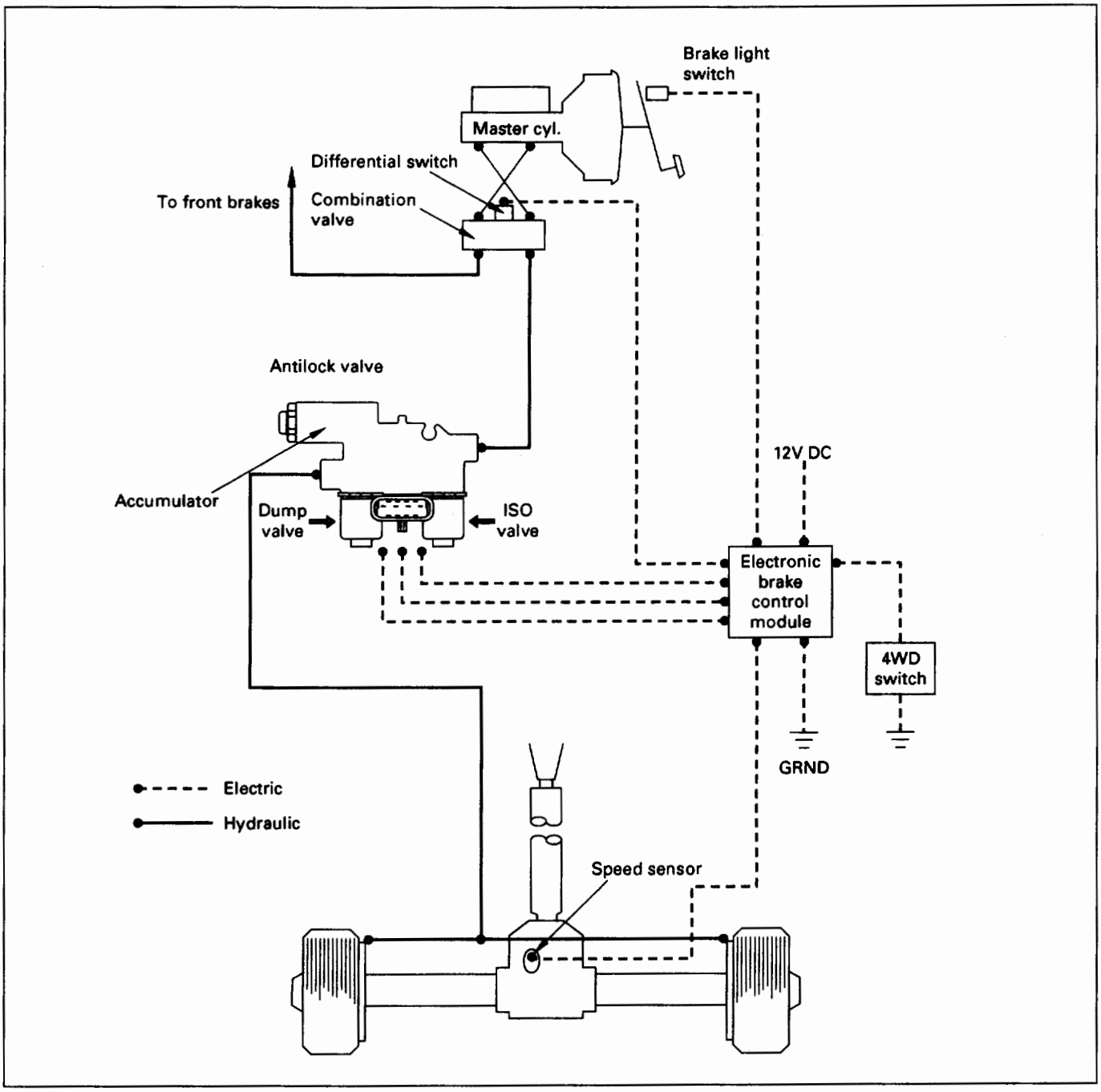
Brake light switch
Master cyl.
Differential switch
To front brakes
Combination valve
Antilock valve
Accumulator
Dump valve
ISO valve
12V DC
Electronic brake control module
4WD switch
GRND
Electric
Hydraulic
Speed sensor

Fig. 5A3-1

ELECTRONIC BRAKE CONTROL MODULE (EBCM)

The electronic brake control module is microprocessor based and is located on the front end of the center console. It performs three different algorithms to calculate excessive wheel deceleration and performs self check diagnostics.

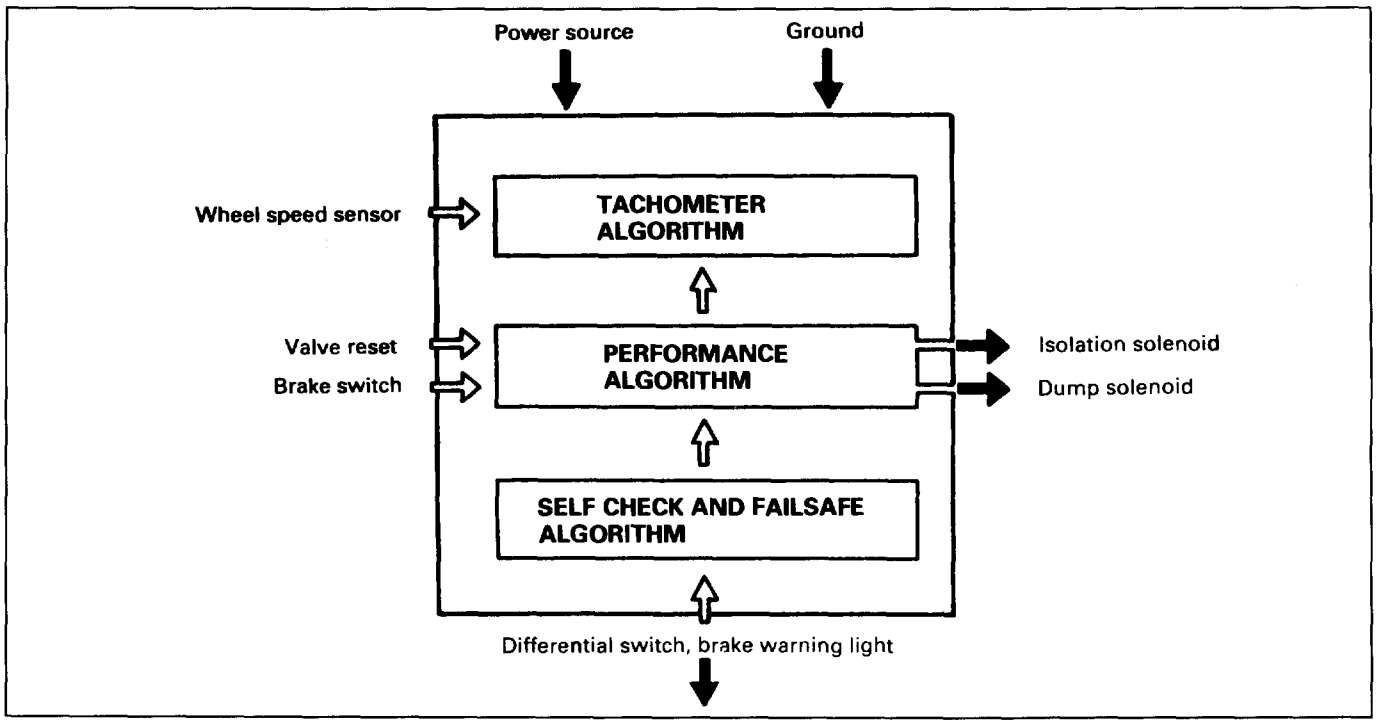

Fig. 5A3-2

ANTILOCK (ISOLATION/DUMP) VALVE

The antilock (dual solenoid hydraulic) valve is located between the rear brakes and the combination valve and is attached on the front right side of engine room. The valve contains an isolation valve, dump valve and an accumulator and is electrically connected to the electronic control module.

The normal positions for the antilock valve components are as follows;

1. Isolation valve is normally open (flow through under normal braking).
2. Dump valve is normally closed.
3. Accumulator is empty.

Once the rear wheel antilock is activated, the EBCM closes the isolation valve. If closing of the isolation valve is insufficient to prevent wheel lock, the EBCM will open the dump valve to allow some rear brake fluid into the accumulator, thus reducing brake pressure. The EBCM will continue to monitor wheel deceleration, and if it is still excessive will cause the antilock valve to dump fluid to the accumulator again. This process will be repeated until the appropriate wheel speed correction is calculated by the EBCM.

When the brake pedal is released, the isolation valve de-energizes and any fluid in the accumulator is returned to the master cylinder.

Normal brake operation is resumed.

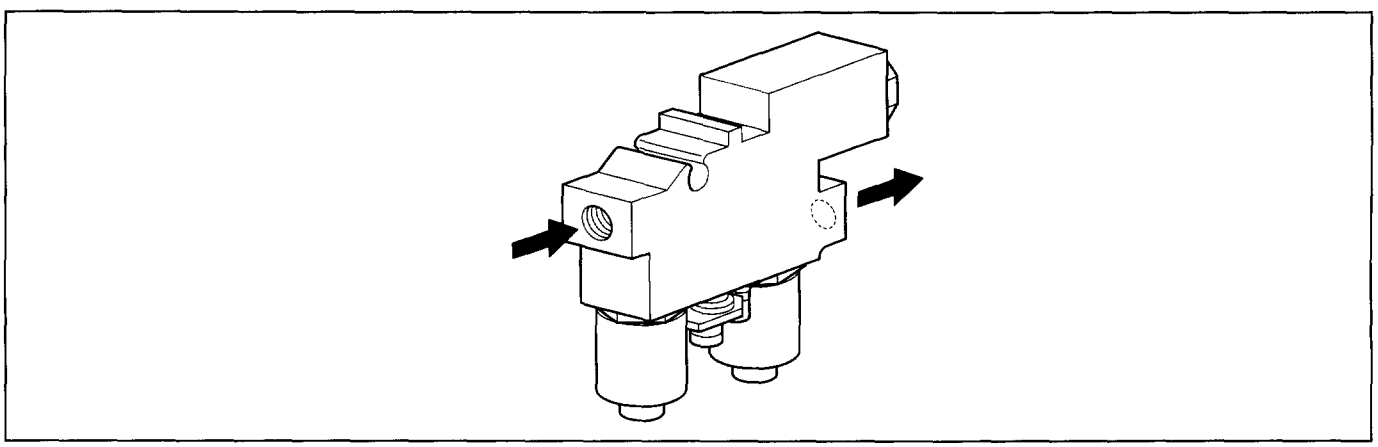

Fig. 5A3-3

SPEED SENSOR

The speed sensor is single pole, variable reluctance pick up, mounted in the rear differential carrier. An exciter ring is press fit on the differential ring gear and provides the signal for the sensor.

The signal generated is proportional to the average speed of the rear wheels and is used by the electronic brake control module (EBCM) to determine locking tendencies of the rear wheels.

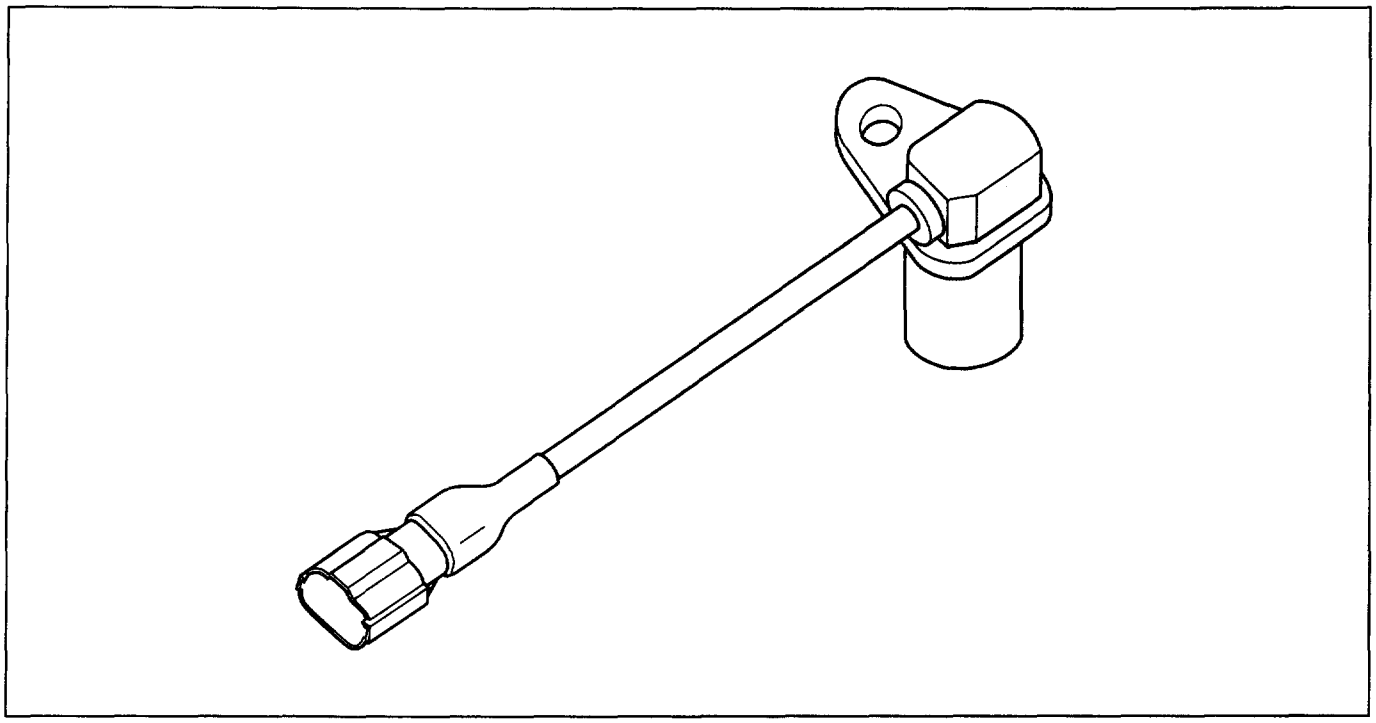

Fig. 5A3-4

REAR WHEEL ANTILOCK (RWAL) CONTROL PARTS LOCATION

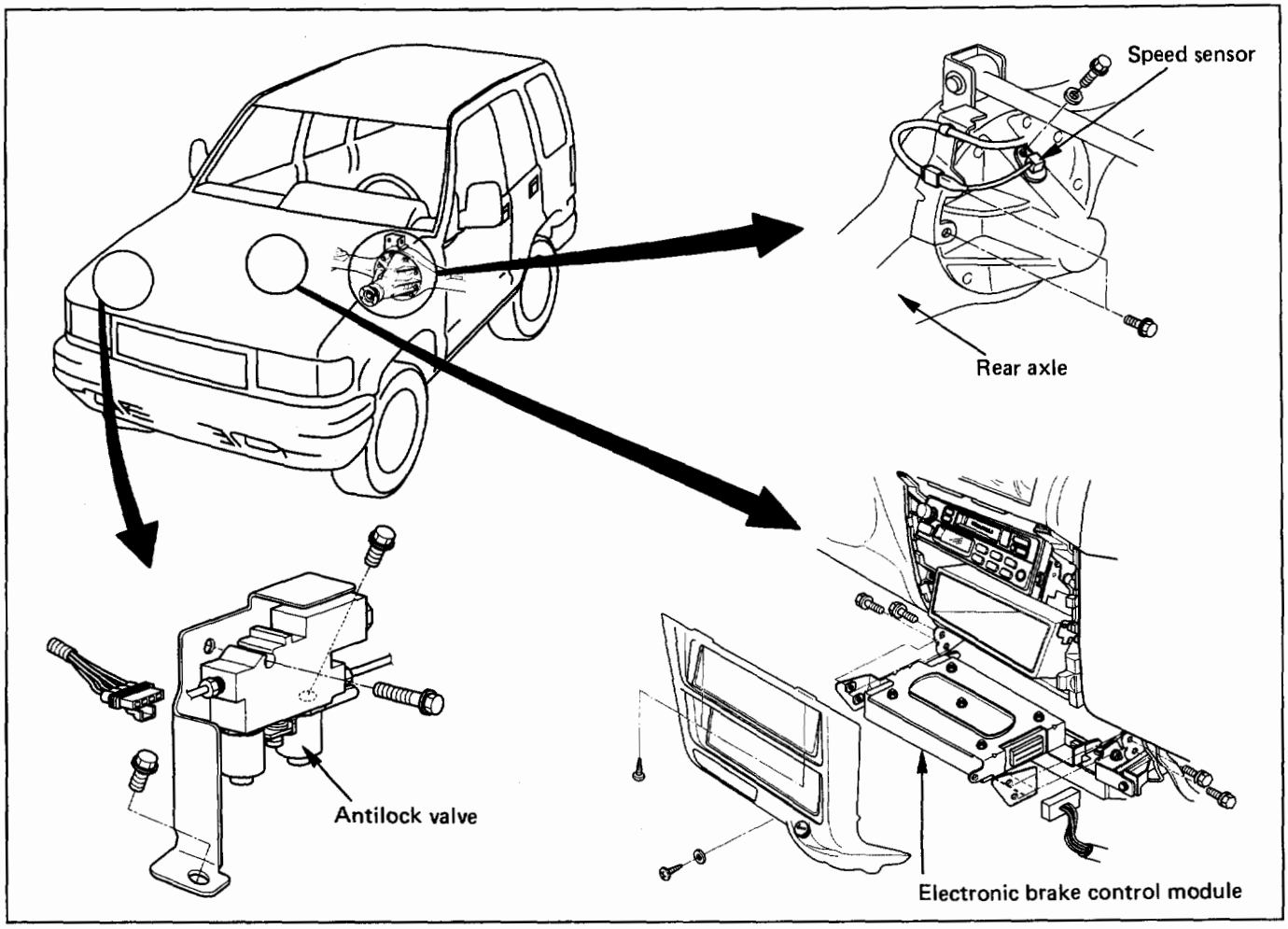

Fig. 5A3-5

ELECTRONIC BRAKE CONTROL MODULE

The module is located at the front of the center console.

ANTILOCK VALVE (Dual solenoid electrohydraulic)

The valve is located on the front right side of engine room.

SPEED SENSOR/EXCITER RING

The sensor and exciter ring are located on the rear axle carrier.

REAR WHEEL ANTILOCK (RWAL) WARNING LIGHT

The light is located on the instrument panel.

SYSTEM DIAGRAM

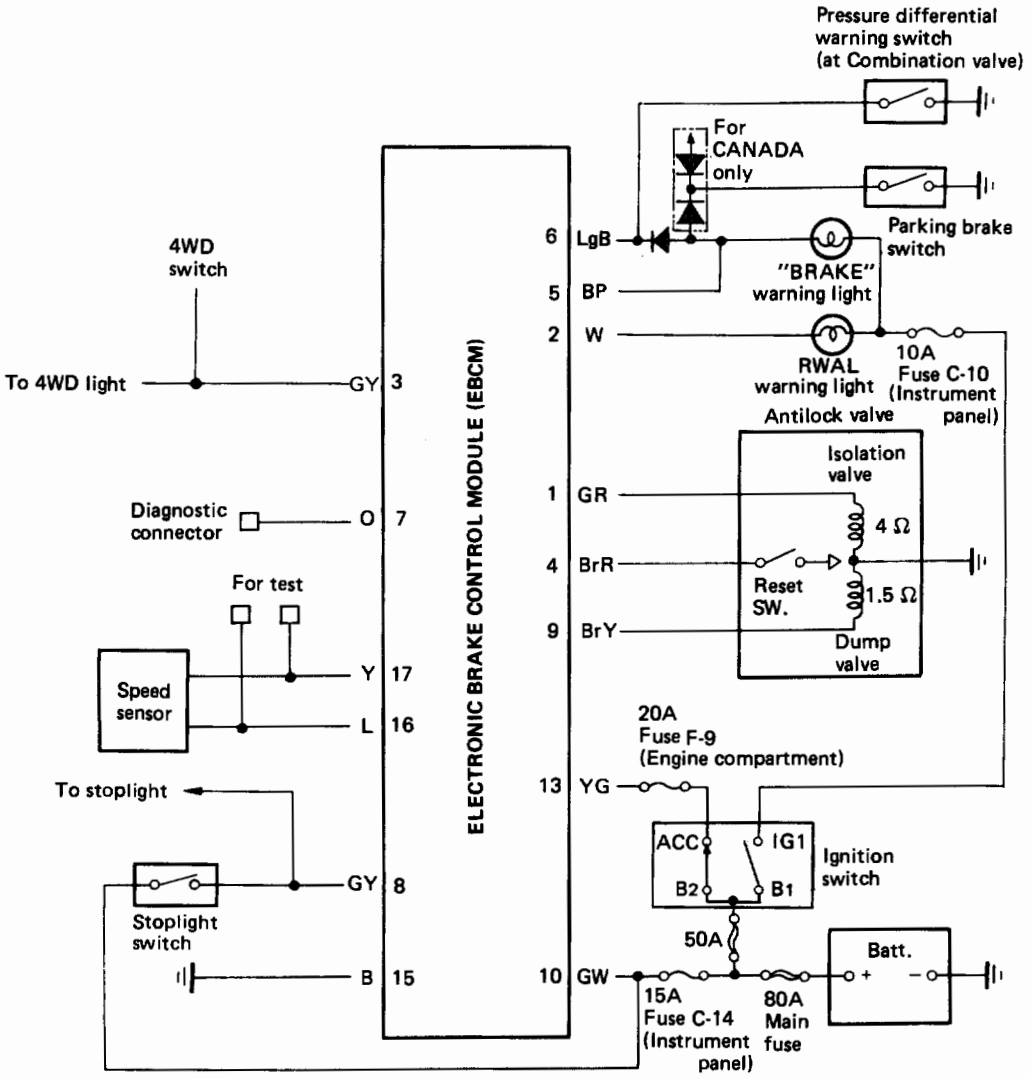

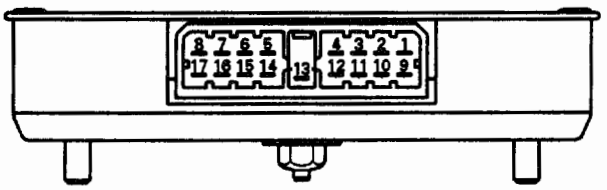

EBCM Pin View

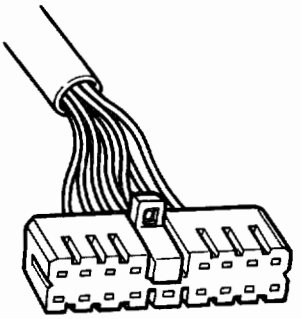

CONNECTOR View

Fig. 5A3-6

REAR WHEEL ANTILOCK (RWAL) SYSTEM DIAGNOSTICS

DIAGNOSIS PROCEDURE

The RWAL system contains 13 diagnostic trouble codes for system troubleshooting. With the ignition key turned ON, momentarily grounding the RWAL diagnostic lead with the "Rr ABS" light on will cause the light to flash out a diagnostic trouble code if a failure has been detected and is in memory. Some RWAL diagnostic trouble codes require a road test in order to be set into the EBCM memory.

RWAL diagnostic trouble codes are cleared from the EBCM memory every time the ignition key is turned off. If a diagnostic trouble code is not present, a test drive must be performed to reproduce the failure and reset the code into memory:

TEST DRIVING

1. Conduct a visual check of the following items to see if any abnormalities exist:
   (a) Service brake mechanism/hydraulic system (See BRAKE SERVICING SECTION).
   (b) Fuses #2, #7, #14 and main fuse
   (c) RWAL-related connector (check for loose pins and rust)
   (d) EBCM and valve ground (check for looseness and rust)

NOTE:

Check (c) and (d) should be done with ignition key turned OFF.

If any abnormality is found, perform repairs as required.

2. Turn the ignition switch ON. As a self-check, the "Rr ABS" light should come on for approximately 2 seconds, then go off and remain off.
   – If the "Rr ABS" light remains on or comes back on, check for diagnostic trouble codes by momentarily grounding the RWAL diagnostic lead with the "Rr ABS" light on.
   – If the "Rr ABS" light self-check operates properly, continue with the test drive below.
3. Test driving vehicle:
   (a) Start the engine and begin driving the vehicle.
   (b) Accelerate to 40 mph.
   (c) At least once, brake to a full stop using enough brake pedal force to activate the RWAL system.
   (d) Accelerate to 60 mph and continue to run at this speed for 5 minutes.
4. – If a diagnostic trouble code is obtained. inspect in accordance with the appropriate "FLASHOUT DIAGNOSTIC TROUBLE CODES CHART".
   – If no diagnostic trouble code is found, and the "Rr ABS" and "BRAKE" light comes on, or if any abnormal operation occurs during the test drive, inspect in accordance with CHART C, "Rr ABS AND BRAKE LIGHTS ON".
5. If the "Rr ABS" or "BRAKE" light does not come during the test drive, ask the customer under what conditions the light came on. Then try to duplicate the complaint condition as closely as possible.
   If no problem is found, check all underhood connections that supply power to the RWAL and ignition fuses, inspect all RWAL harness connectors, and inspect the EBCM and anti-lock valve ground connections.
   Do not assume that the EBCM is bad because the "Rr ABS" or "BRAKE" lights are on. In most cases, it is telling you it has found a problem elsewhere.

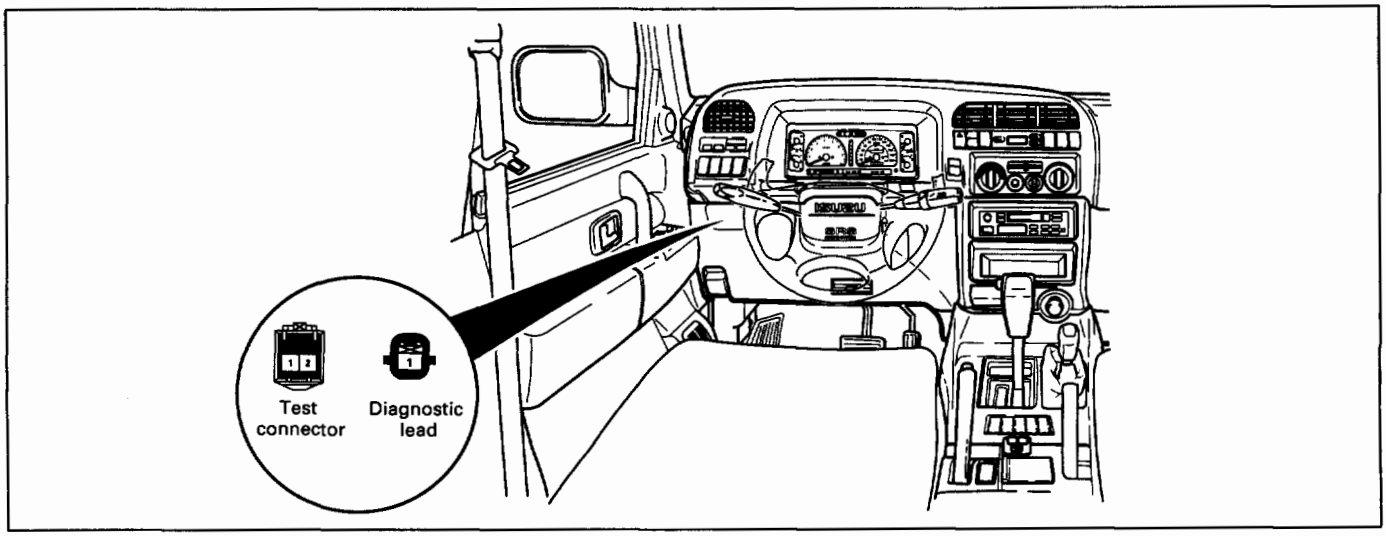

Fig. 5A3-7

How to read diagnostic trouble codes

Count the number of short flashes starting from the long flash. Include the long flash as a count. **Sometimes the first count sequence is short because the flashout started with the count already in progress.** Subsequent counts, however, will be accurate. If there is more than one system failure, only the first recognized diagnostic code will be retained in memory and flashed. If a diagnostic code is obtained, go to the appropriate flashout code chart.

DIAGNOSTIC CODE : Rr. ABS LIGHT IS ON AND OFF.
SIGNAL CODE 3

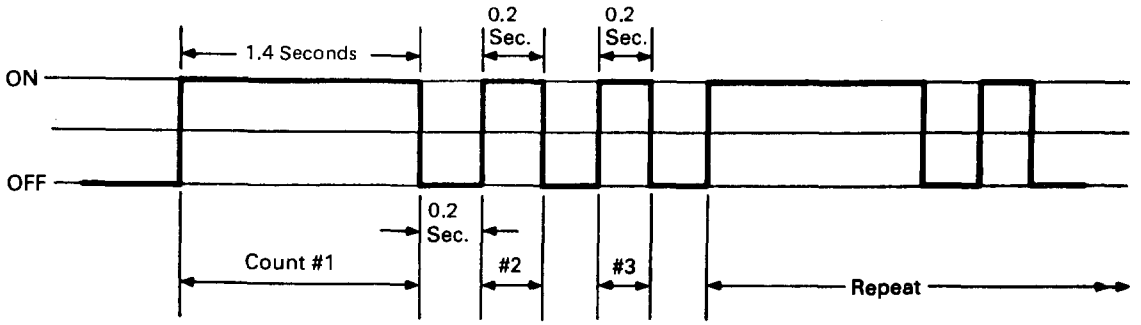

Fig. 5A3-8

Refer to Charts A through E if a diagnosis code cannot be obtained and any of the following light conditions are observed: "Rr ABS" light off but no 2 second bulb self check; "BRAKE" light on and "Rr ABS" light off; both "Rr ABS" and "BRAKE" lights on or flashing.
Be sure to perform all conventional brake system diagnosis before assuming the problem is in the rear wheel antilock system.

NOTE:
After a repair has been completed from Charts A through E, the power to the module does not have to be broken to clear the memory, as these failures are not stored in memory.

NOTE:
Do not assume the EBCM is bad because the "Rr ABS" and "BRAKE" lights are on. In most cases, it is telling you it has found a problem elsewhere.

REAR ABS AND BRAKE LIGHTS CHART

CONDITION	ACTION TO TAKE
Rr. ABS light "OFF" and will not self-check.	See CHART A
BRAKE light "ON" Rr. ABS light "OFF" and does self-check.	See CHART B
Rr. ABS and BRAKE lights "ON"	See CHART C
Rr. ABS and BRAKE lights flashing.	See CHART D
Rear wheels lock with hard stops. (Rr. ABS and BRAKE lights self check properly.)	See CHART E

CHART A

Rr.ABS Light "OFF" and will not Self Check

- CHECK THAT THE EBCM HARNESS CONNECTOR IS FULLY PLUGGED IN TO THE EBCM.

NOT FULLY PLUGGED

- PLUG CONNECTOR FULLY, AND RECHECK THE SELF CHECK.

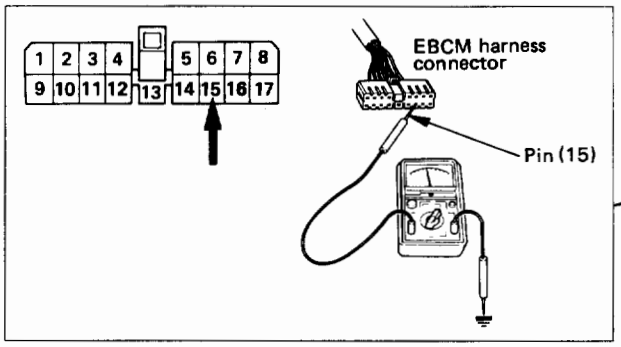

FULLY PLUGGED

- DISCONNECT THE BATTERY AND EBCM HARNESS CONNECTOR. CHECK FOR RESISTANCE BETWEEN CONNECTOR PIN (15) AND CHASSIS GROUND WHILE SHAKING THE HARNESS.

CONSTANT READING OF RESISTANCE OVER 1 OHM

- CHECK FOR OPEN CIRCUIT IN EBCM GROUND WIRE, OR LOOSE CONNECTOR PIN, AND RECHECK THE SELF CHECK.

CONSTANT READING OF RESISTANCE UNDER 1 OHM

- CHECK FUSE IN INSTRUMENT PANEL (C-10, 10A).

FUSE IS BLOWN.

DETERMINE REASON FOR BLOWN FUSE. REPAIR AS REQUIRED, THEN RECHECK THE SELF CHECK AND RETEST VEHICLE.

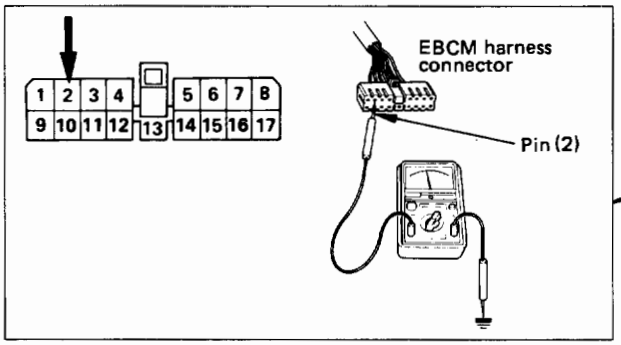

FUSE IS OK.

- CONNECT THE BATTERY, AND START THE ENGINE. CHECK FOR VOLTAGE BETWEEN EBCM HARNESS CONNECTOR PIN (2) AND CHASSIS HARNESS GROUND WHILE SHAKING THE HARNESS.

Continued on the next page

EBCM — Electronic Brake Control Module

Continued from the previous page

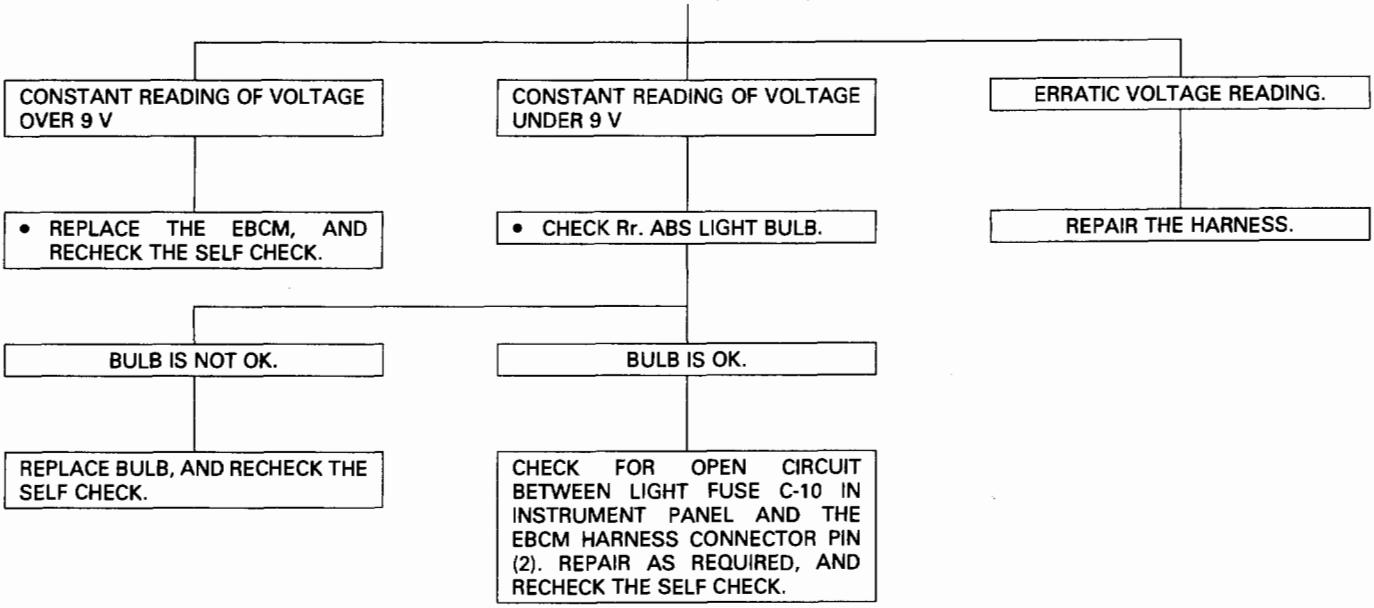

EBCM — Electronic Brake Control Module

CHART B

Brake Light "ON" Rr. ABS Light "OFF" and Does Self Check

- START THE ENGINE, AND CHECK FOR BRAKE LIGHT.
- RELEASE PARKING BRAKE IF APPLIED.

BRAKE LIGHT GOES OFF.

DISREGARD FAILURE.

BRAKE LIGHT REMAINS ON.

- DISCONNECT THE PARKING BRAKE SWITCH CONNECTOR FROM THE SWITCH, AND RECHECK FOR BRAKE LIGHT.

BRAKE LIGHT GOES OFF.

ADJUST OR REPLACE PARKING BRAKE SWITCH, AND RECHECK IT.

BRAKE LIGHT REMAINS ON.

- DISCONNECT THE PRESSURE DIFFERENTIAL WARNING SWITCH CONNECTOR FROM THE SWITCH, AND RECHECK FOR BRAKE LIGHT.

BRAKE LIGHT GOES OFF.

CHECK COMBINATION VALVE. REFER TO "HYDRAULIC BRAKES" (SEC. 5A) FOR DIAGNOSIS.

BRAKE LIGHT REMAINS ON.

- DISCONNECT THE EBCM HARNESS CONNECTOR FROM EBCM, AND RECHECK FOR BRAKE LIGHT.

BRAKE LIGHT GOES OFF.

REPLACE EBCM, AND RECHECK IT.

BRAKE LIGHT REMAINS ON.

CHECK FOR SHORT TO GROUND IN BRAKE LIGHT WIRE, AND REPAIR AND RECHECK THE SELF CHECK.

EBCM = Electronic Brake Control Module

CHART C

Rr. ABS and Brake Lights "ON" (No Flashout Code)

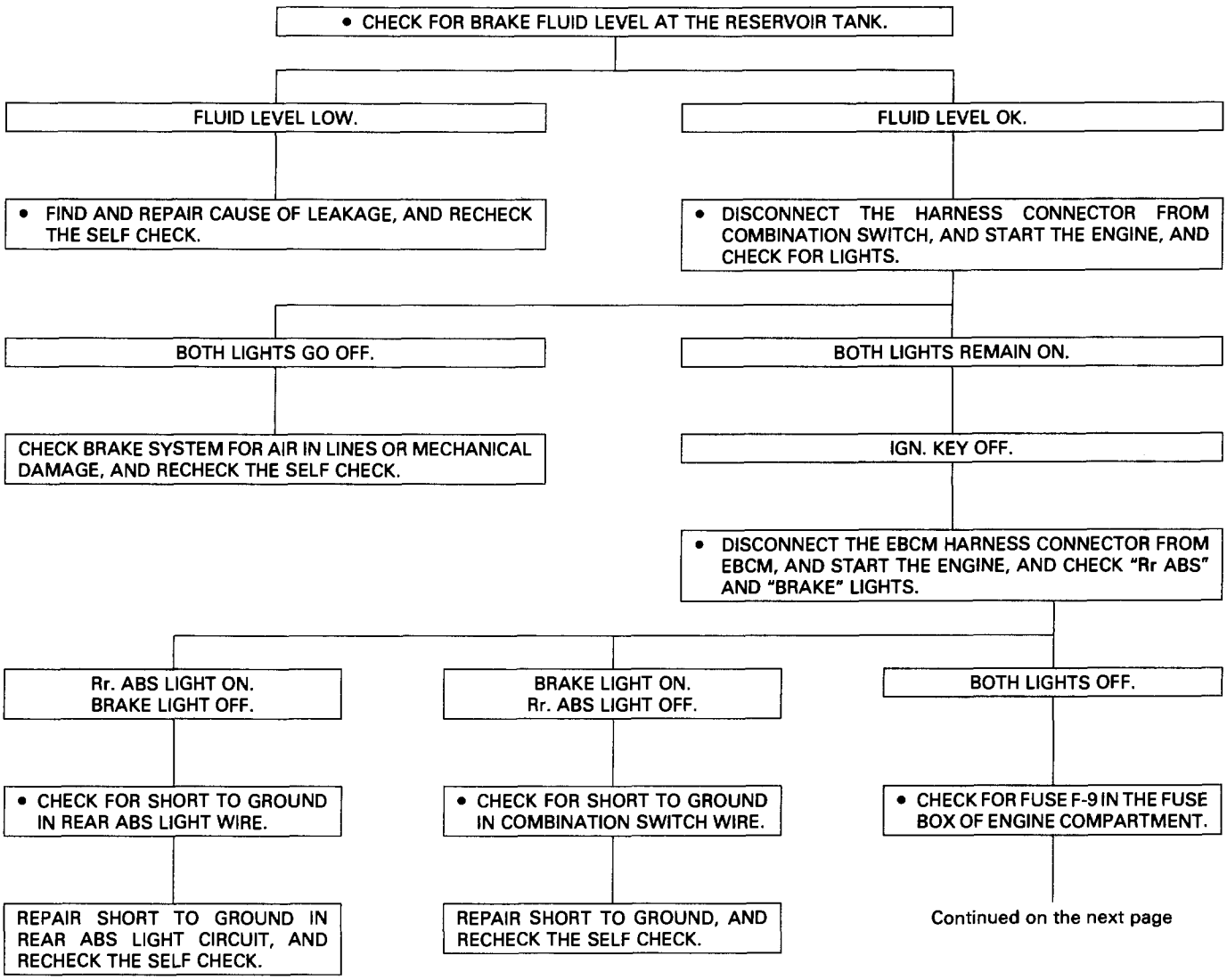

Continued on the next page

EBCM – Electronic Brake Control Module

Continued from the previous page

FUSE IS BLOWN.

- CHECK AND REPAIR ALL CIRCUITS FUSE IS PROTECTING FOR SHORTS TO GROUND. REPLACE FUSE, AND RECHECK THE SELF CHECK.

FUSE IS OK.

- DISCONNECT THE EBCM HARNESS CONNECTOR FROM EBCM, AND TURN THE IGNITION KEY TO THE ON POSITION, CHECK FOR VOLTAGE BETWEEN PIN (13) AND CHASSIS GROUND WHILE SHAKING THE HARNESS.

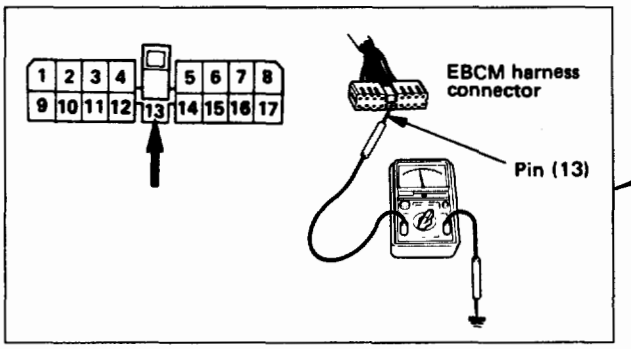

CONSTANT READING OF VOLTAGE OVER 9 V

Continued on the next page

CONSTANT READING OF VOLTAGE UNDER 9 V

REPAIR OPEN CIRCUIT.

ERRATIC VOLTAGE READING.

REPAIR THE HARNESS.

EBCM — Electronic Brake Control Module

Continued from the previous page

- CHECK FOR FUSE C-14 IN THE FUSE BOX OF INSTRUMENT PANEL

FUSE IS BLOWN.

- CHECK AND REPAIR ALL CIRCUITS FUSE IS PROTECTING FOR SHORTS TO GROUND. REPLACE FUSE, AND RECHECK THE SELF CHECK.

FUSE IS OK.

- DISCONNECT THE EBCM HARNESS CONNECTOR FROM EBCM, AND CHECK FOR VOLTAGE BETWEEN PIN (10) AND CHASSIS GROUND WHILE SHAKING THE HARNESS.

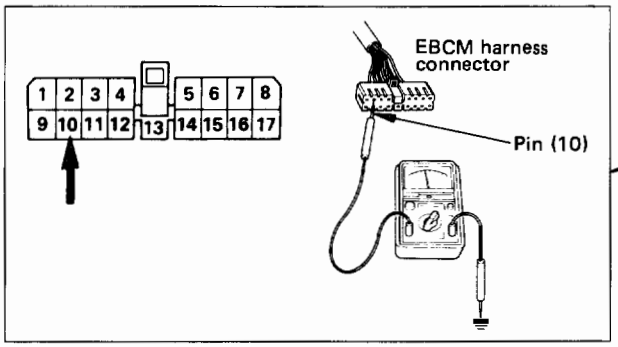

CONSTANT READING OF VOLTAGE OVER 9 V

- CHECK FOR RESISTANCE BETWEEN PIN (7) AND CHASSIS GROUND WHILE SHAKING THE HARNESS.

CONSTANT READING OF VOLTAGE UNDER 9 V

REPAIR OPEN CIRCUIT

ERRATIC VOLTAGE READING.

REPAIR THE HARNESS.

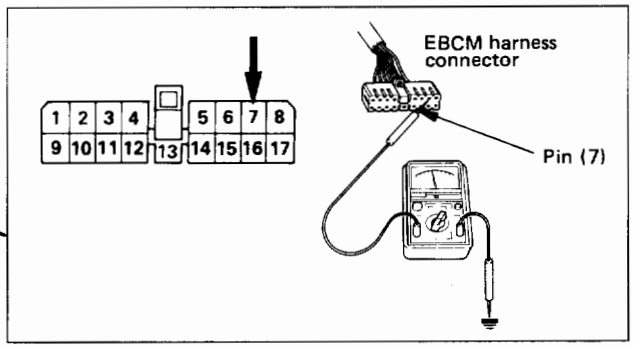

CONSTANT READING OF OVER 100K OHMS

REPLACE THE EBCM, AND RECHECK SYSTEM.

CONSTANT READING OF UNDER 100K OHMS

REPAIR SHORT CIRCUIT TO THE GROUND.

ERRATIC RESISTANCE READING.

REPAIR THE HARNESS.

EBCM = Electronic Brake Control Module

CHART D

Rr. ABS and Brake Lights Flashing

- TURN THE IGNITION KEY TO THE OFF POSITION, AND DISCONNECT THE EBCM HARNESS CONNECTOR FROM EBCM AND IGN. KEY ON CHECK FOR VOLTAGE AT PIN (13) OF EBCM HARNESS CONNECTOR AND CHASSIS GROUND WHILE SHAKING THE BODY HARNESS AND REAR BODY HARNESS.

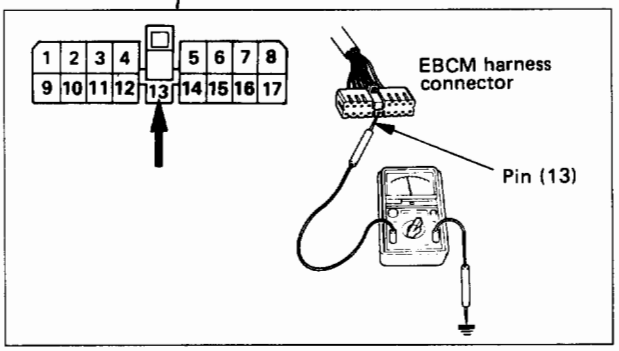

VOLTAGE IS INTERMITTENT.

REPAIR THE HARNESS FOR OPEN CIRCUIT, AND RECHECK THE SYSTEM.

VOLTAGE IS STEADY AND OVER 9 V.

- DISCONNECT BATTERY, AND CHECK FOR RESISTANCE AT PIN (7) OF THE EBCM HARNESS CONNECTOR AND CHASSIS GROUND WHILE SHAKING THE BODY HARNESS AND REAR BODY HARNESS.

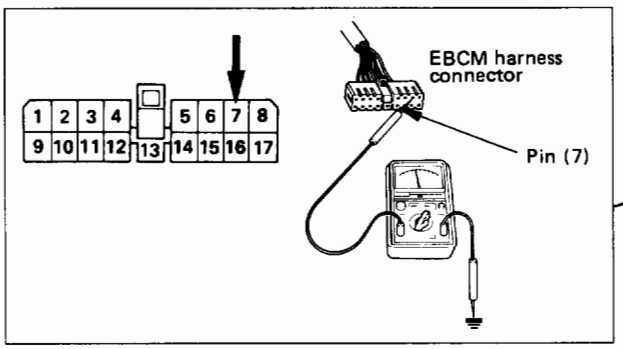

RESISTANCE UNDER 100K OHMS AND INTERMITTENT.

REPAIR WIRE FOR A SHORT TO GROUND, AND RECHECK THE SYSTEM.

RESISTANCE OVER 100K OHMS AND STEADY.

- CHECK FOR RESISTANCE AT PIN (15) OF EBCM HARNESS CONNECTOR, AND CHASSIS GROUND WHILE SHAKING THE BODY HARNESS AND REAR BODY HARNESS.

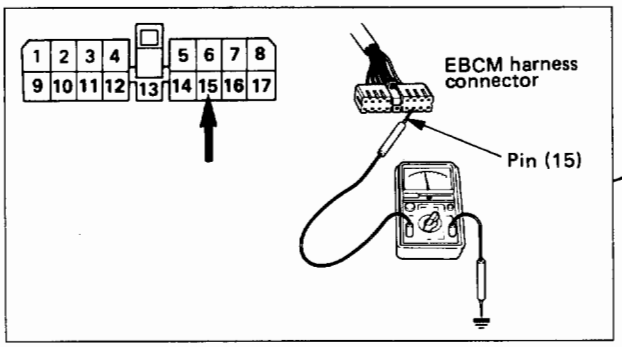

RESISTANCE UNDER 1 OHM AND STEADY.

REPLACE THE EBCM, AND RECHECK THE SYSTEM.

RESISTANCE OVER 1 OHM AND INTERMITTENT.

REPAIR OPEN CIRCUIT IN WIRE TO PIN (15) OF EBCM CONNECTOR, AND RECHECK THE SYSTEM.

EBCM = Electronic Brake Control Module

CHART E

Rear Wheels Lock with Hard Stops (Rr. ABS and Brake Lights Self Check Properly)

- APPLY THE BRAKE PEDAL AND CHECK FOR STOP LIGHTS.

STOP LIGHTS WILL NOT ILLUMINATE.

CHECK STOP LIGHT SWITCH OR CIRCUIT, AND REPAIR AS NECESSARY, AND RECHECK IT.

STOP LIGHTS OK.

- REMOVE THE SENSOR FROM THE REAR AXLE CASE, AND CHECK FOR MISSING EXCITER RING, OR TEETH MISSING.

EXCITER RING IS MISSING, OR TEETH ARE MISSING.

REPLACE THE EXCITER RING.

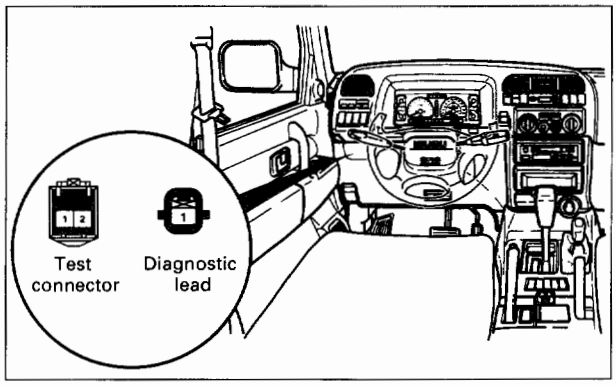

EXCITER RING IS PRESENT, AND TEETH ARE INTACT.

- REINSTALL THE SENSOR AND RAISE REAR WHEELS TO SAFELY CLEAR THE FLOOR.
- START ENGINE, AND TURN REAR WHEEL AT 5 MPH.
- REMOVE THE LEFT HAND KICK PANEL, AND USING A VOLTMETER SET ON THE AC SCALE, CHECK FOR VOLTAGE AT THE TWO PINS OF THE SENSOR TEST CONNECTOR.

VOLTAGE UNDER 650 mV ON AC SCALE

REPLACE THE SPEED SENSOR, AND RECHEK SENSOR OUTPUT.

VOLTAGE OVER 650 mV ON AC SCALE

- REINSTALL THE KICK PANEL, AND CHECK THE REAR BRAKE FOR MECHANICAL PROBLEMS SUCH AS GRABBING, LOCKING OR PULLING.

REAR BRAKES OK.

REPLACE THE EBCM.

REAR BRAKES LOCK, GRAB OR PULL.

REPAIR THE REAR BRAKE PROBLEMS.

EBCM = Electronic Brake Control Module

DIAGNOSTIC TROUBLE CODES

FLASHOUT CODES CHART

CONDITION	ACTION TO TAKE
Rr. ABS light flashes 2 times. (High resistance isolate circuit or malfunctioning EBCM)	See Flashout Diagnostic Trouble Code (DTC) 2
Rr. ABS light flashes 3 times. (High resistance dump circuit or malfunctioning EBCM)	See Flashout DTC 3
Rr. ABS light flashes 4 times. (Closed rear wheel antilock valve switch)	See Flashout DTC 4
Rr. ABS light flashes 5 times. System dumps too many times in 2WD (2WD and 4WD vehicles) condition Occurs while making normal or hard stops. Rear brake may lock.	See Flashout DTC 5
Rr. ABS light flashes 6 times. (Erratic speed sensor reading while driving)	See Flashout DTC 6
Rr. ABS light flashes 7 times. Isolation output missing or antilock valve wiring shorted to ground	See Flashout DTC 7
Rr. ABS light flashes 8 times. Dump output missing or antilock valve wiring shorted to ground	See Flashout DTC 8
Rr. ABS light flashes 9 times. (High sensor resistance)	See Flashout DTC 9
Rr. ABS light flashes 10 times. (Low sensor resistance)	See Flashout DTC 10
Rr. ABS light flashes 11 times. Stop light switch circuit defective, condition indicated only when driving above 56 km/h (35 mph)	See Flashout DTC 11
Rr. ABS light flashes 13 times. (Speed processor check EBCM)	See Flashout DTC 13
Rr. ABS light flashes 14 times. (Program check EBCM)	See Flashout DTC 14
Rr. ABS light flashes 15 times. (Memory failure EBCM)	See Flashout DTC 15

NOTE:

- Codes 1, 12 and over 15 are not utilized for the diagnostic mode.

EBCM = Electronic Brake Control Module

DIAGNOSIS PROCEDURE

FLASHOUT DIAGNOSTIC TROUBLE CODE 2

(HIGH RESISTANCE ISOLATE CIRCUIT OR MALFUNCTIONING EBCM)

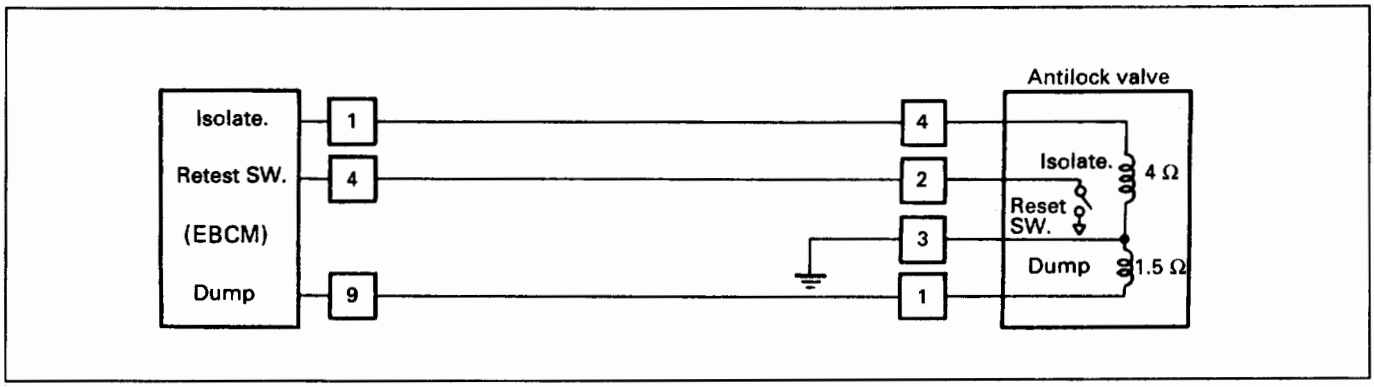

- DISCONNECT THE BATTERY GROUND CABLE.

- DISCONNECT THE EBCM HARNESS CONNECTOR FROM EBCM, AND CHECK FOR RESISTANCE BETWEEN EBCM HARNESS CONNECTOR PIN (1) AND CHASSIS GROUND WHILE SHAKING THE HARNESS.

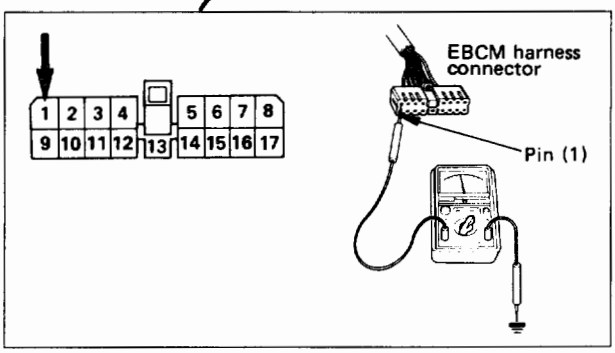

CONSTANT READING OF RESISTANCE 3 TO 6 OHMS

CHECK EBCM VALVE AND GROUND CONNECTION

NO PROBLEM IN EBCM/VALVE AND GROUND CONNECTION.

PROBLEM FOUND REPAIR CONNECTION(S) AND/OR GROUND

CONNECT EBCM TO HARNESS CONNECTOR THEN TURN IGNITION ON.

NO CODE 2 INDICATED

CODE 2 RETURNS

REPLACE ANTILOCK VALVE AND RECHECK THE SELF CHECK AND RETEST VEHICLE.

REPLACE EBCM AND RECHECK THE SELF CHECK.

Continued on the next page

EBCM — Electronic Brake Control Module

Continued from the previous page

CONSTANT READING OF RESISTANCE OVER 6 OHMS

- DISCONNECT ANTILOCK VALVE HARNESS CONNECTOR, AND CHECK FOR RESISTANCE BETWEEN GROUND PIN (3) OF VALVE HARNESS CONNECTOR AND CHASSIS HARNESS GROUND WHILE SHAKING THE HARNESS.

ERRATIC RESISTANCE READING

REPAIR THE HARNESS

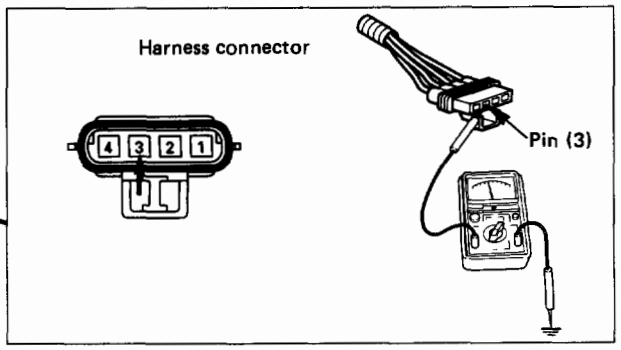

CONSTANT READING OF RESISTANCE OVER 1 OHM

REPAIR OPEN CIRCUIT IN VALVE GROUND WIRE HARNESS OR LOOSE CONNECTOR PINS, AND RECHECK THE SELF CHECK.

CONSTANT READING OF RESISTANCE UNDER 1 OHM

- CHECK FOR RESISTANCE BETWEEN ISOLATION PIN (4) AND GROUND PIN (3) OF VALVE CONNECTOR.

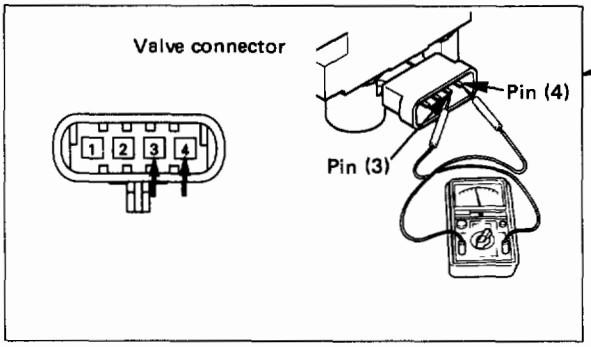

ERRATIC RESISTANCE READING.

REPAIR THE HARNESS.

CONSTANT READING OF RESISTANCE 3 TO 6 OHMS

REPAIR OPEN ISOLATION SOLENOID WIRE FROM THE VALVE TO EBCM OR LOOSE PINS IN CONNECTOR, AND RECHECK THE SELF CHECK.

CONSTANT READING OF RESISTANCE OVER 6 OHMS

REPLACE THE ANTILOCK VALVE, AND RECHECK THE SELF CHECK.

EBCM = Electronic Brake Control Module

FLASHOUT DIAGNOSTIC TROUBLE CODE 3

(HIGH RESISTANCE DUMP CIRCUIT OR MALFUNCTIONING EBCM)

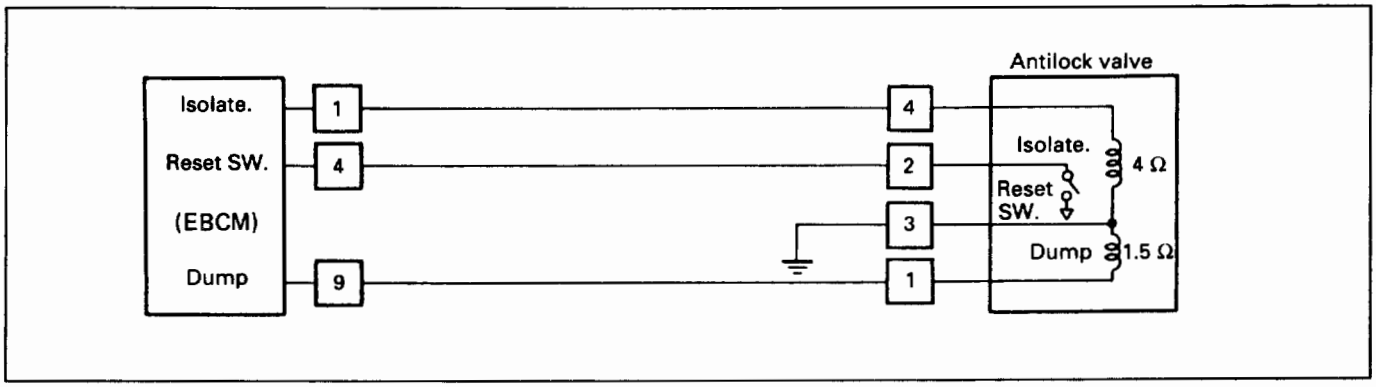

- DISCONNECT THE BATTERY GROUND CABLE.
- DISCONNECT EBCM HARNESS CONNECTOR FROM EBCM, AND CHECK FOR RESISTANCE BETWEEN EBCM HARNESS CONNECTOR PIN (9) AND CHASSIS GROUND WHILE SHAKING THE HARNESS.

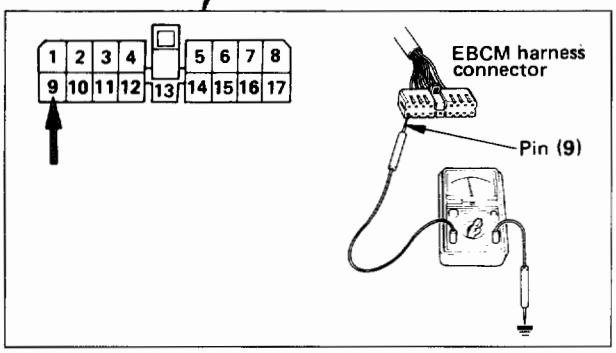

CONSTANT READING OF RESISTANCE 1 TO 3 OHMS

CHECK EBCM VALVE AND GROUND CONNECTION

NO PROBLEM IN EBCM/VALVE AND GROUND CONNECTION.

PROBLEM FOUND REPAIR CONNECTION(S) AND/OR GROUND

CONNECT EBCM TO HARNESS CONNECTOR THEN TURN IGNITION ON.

NO CODE 3 INDICATED

CODE 3 RETURNS

REPLACE ANTILOCK VALVE AND RECHECK THE SELF CHECK AND RETEST VEHICLE.

REPLACE EBCM AND RECHECK THE SELF CHECK.

Continued on the next page

EBCM = Electronic Brake Control Module

Continued from the previous page

CONSTANT READING OF RESISTANCE OVER 3 OHMS

ERRATIC RESISTANCE READING

- DISCONNECT ANTILOCK VALVE HARNESS CONNECTOR, AND CHECK FOR RESISTANCE BETWEEN GROUND PIN (3) OF VALVE HARNESS CONNECTOR AND CHASSIS HARNESS GROUND WHILE SHAKING THE HARNESS.

REPAIR THE HARNESS

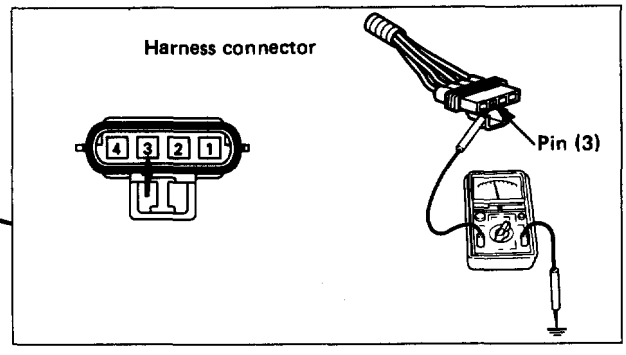

CONSTANT READING OF RESISTANCE OVER 1 OHM

CONSTANT READING OF RESISTANCE UNDER 1 OHM

ERRATIC RESISTANCE READING.

REPAIR OPEN CIRCUIT

- CHECK FOR RESISTANCE BETWEEN DUMP PIN (1) AND GROUND PIN (3) OF VALVE CONNECTOR

REPAIR THE HARNESS.

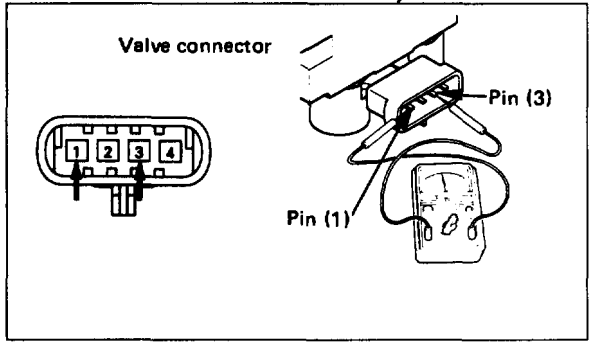

CONSTANT READING OF RESISTANCE 1 TO 3 OHMS

CONSTANT READING OF RESISTANCE OVER 3 OHMS

REPAIR OPEN DUMP SOLENOID WIRE FROM THE VALVE TO THE EBCM OR LOOSE PINS IN THE CONNECTOR, AND RECHECK THE SELF CHECK.

REPLACE THE ANTILOCK VALVE, AND RECHECK THE SELF CHECK.

EBCM — Electronic Brake Control Module

FLASHOUT DIAGNOSTIC TROUBLE CODE 4

(CLOSED REAR WHEEL ANTILOCK VALVE SWITCH)

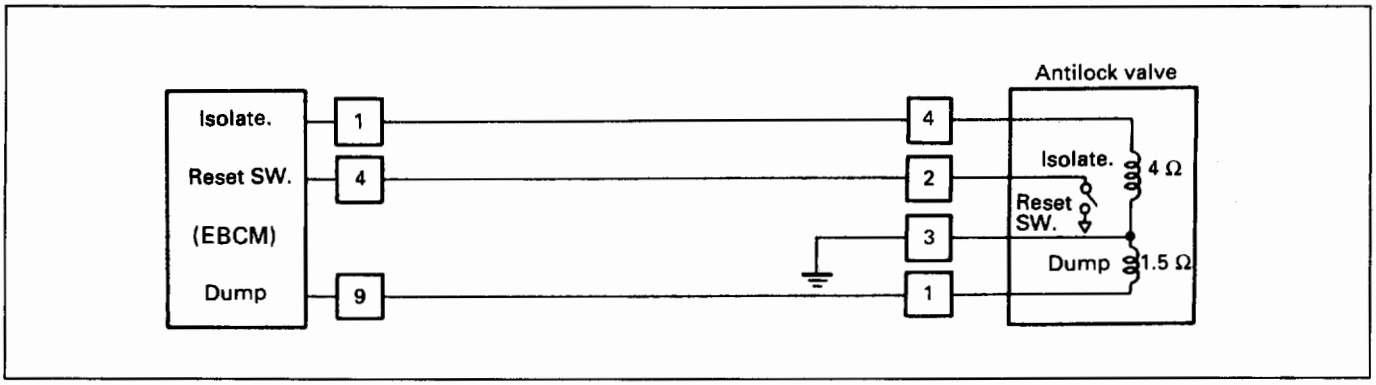

- DISCONNECT ANTILOCK VALVE CONNECTOR, AND CHECK FOR RESISTANCE BETWEEN THE VALVE CONNECTOR RESET SWITCH PIN (2) AND THE VALVE BODY.

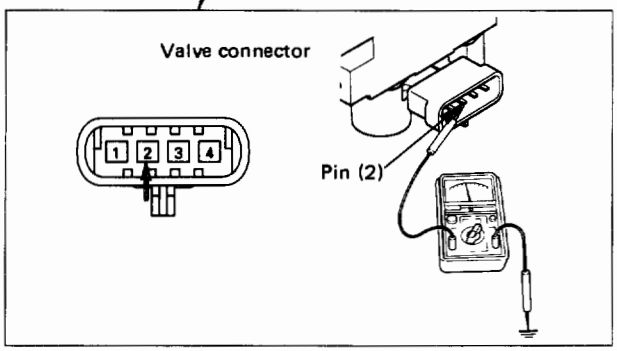

CONSTANT READING OF RESISTANCE UNDER 10K OHMS

REPLACE ANTILOCK VALVE, AND RECHECK THE SELF CHECK.

CONSTANT READING OF RESISTANCE OVER 10K OHMS

- CHECK FOR RESISTANCE BETWEEN THE VALVE CONNECTOR RESET SWITCH PIN (2) AND GROUND PIN (3).

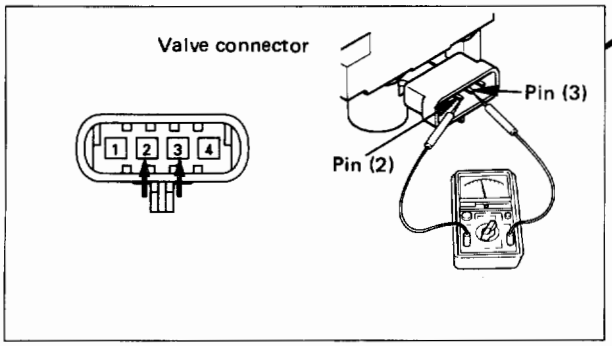

Continued on the next page

Continued from the previous page

CONSTANT READING OF RESISTANCE UNDER 10K OHMS

REPLACE ANTILOCK VALVE, AND RECHECK THE SELF CHECK.

CONSTANT READING OF RESISTANCE OVER 10K OHMS

- DISCONNECT THE EBCM HARNESS CONNECTOR FROM EBCM, AND CHECK FOR RESISTANCE BETWEEN EBCM HARNESS CONNECTOR PIN (4) AND CHASSIS GROUND WHILE SHAKING THE HARNESS.

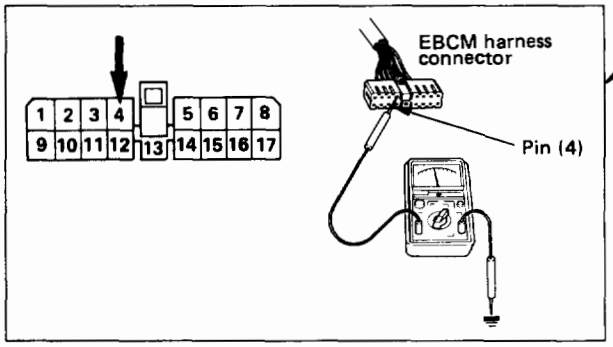

CONSTANT READING OF RESISTANCE UNDER 100K OHMS

REPAIR SHORT IN VALVE RESET WIRE FROM VALVE TO EBCM HARNESS CONNECTOR, AND RECHECK THE SELF CHECK.

CONSTANT READING OF RESISTANCE OVER 100K OHMS

CONNECT EBCM TO HARNESS CONNECTOR, THEN TURN IGNITION ON.

ERRATIC RESISTANCE READING

REPAIR THE HARNESS

NO CODE 4 INDICATED, OR WHEN PRESS THE BRAKE PEDAL AS HARD AS POSSIBLE, CODE 4 RETURNS.

REPLACE ANTILOCK VALVE AND RECHECK THE SELF CHECK AND RETEST VEHICLE.

CODE 4 RETURNS WITHOUT BRAKE APPLICATION

REPLACE EBCM, AND RECHECK THE SELF CHECK.

EBCM — Electronic Brake Control Module

FLASHOUT DIAGNOSTIC TROUBLE CODE 5

(SYSTEM DUMPS TOO MANY TIMES IN 2WD CONDITION)

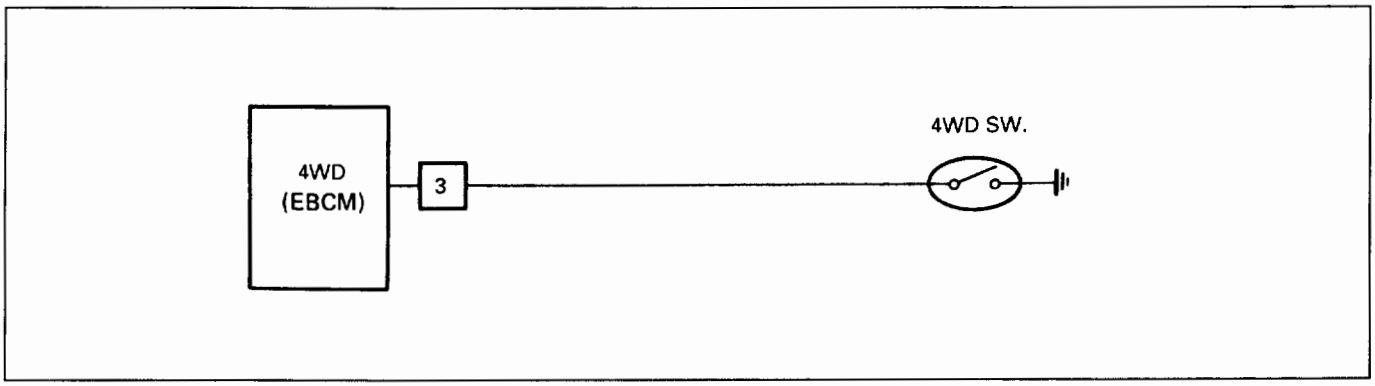

- CHECK IF FAILURE OCCURS IN 2WD MODE OR 4WD MODE.

(2WD MODE)

- DISCONNECT THE EBCM HARNESS CONNECTOR FROM EBCM.
- DRIVE THE VEHICLE IN 2WD MODE.
- CHECK FOR CONDITION OF THE REAR BRAKE SYSTEM.

REAR BRAKES TEND TO LOCK UP EASILY. → REPAIR REAR BRAKE SYSTEM, AND RETEST VEHICLE.

REAR BRAKES ARE NORMAL. → REPLACE ANTILOCK VALVE, AND RETEST VEHICLE.

(4WD MODE)

- DISCONNECT THE EBCM HARNESS CONNECTOR FROM EBCM.
- TURN THE IGNITION KEY TO "ON".
- SHIFT TO 4WD MODE.
- CHECK FOR VOLTAGE BETWEEN HARNESS CONNECTOR PIN (3) AND CHASSIS GROUND WHILE SHAKING THE HARNESS.

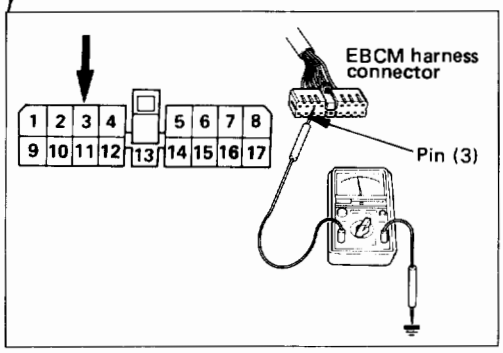

ERRATIC RESISTANCE READING. → REPAIR THE HARNESS

CONSTANT READING OF VOLTAGE UNDER 1 V → REPLACE ANTILOCK VALVE, AND RETEST VEHICLE.

CONSTANT READING OF VOLTAGE OVER 1 V → REPEAT 4WD INDICATOR SWITCH, AND RETEST VEHICLE.

EBCM = Electronic Brake Control Module

FLASHOUT DIAGNOSTIC TROUBLE CODE 6

(ERRATIC SPEED SENSOR READING WHILE DRIVING)

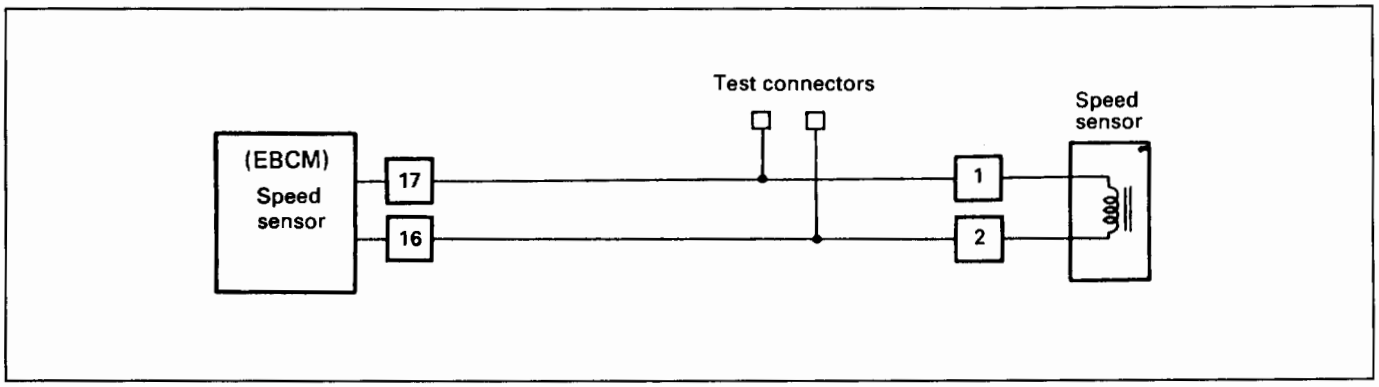

- DISCONNECT THE BATTERY GROUND CABLE.

- DISCONNECT THE EBCM HARNESS CONNECTOR FROM EBCM, AND CHECK FOR RESISTANCE BETWEEN HARNESS CONNECTOR PINS, (17 AND 16) WHILE SHAKING THE HARNESS FROM SPEED SENSOR TO EBCM.

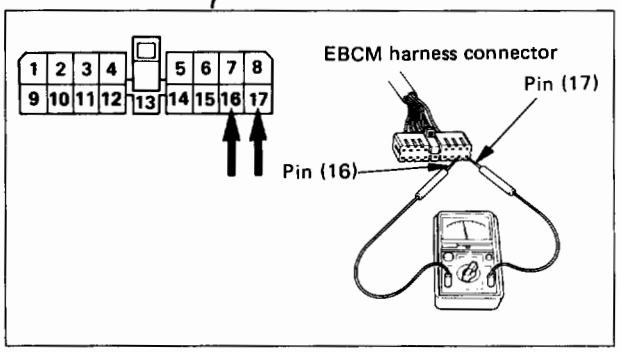

ERRATIC RESISTANCE READING.	CONSTANT READING 1000 TO 2000 OHMS
REPAIR LOOSE CONNECTION IN THE SPEED SENSOR CIRCUITS; CHECK FOR DIRTY OR LOOSE PINS AND FRAYED OR SHORTED CONNECTORS AND RETEST VEHICLE.	• CHECK FOR A BUILD-UP OF METAL CHIPS ON SPEED SENSOR MAGNETIC POLE PIECE.
METAL CHIPS ARE PRESENT.	NO METAL CHIPS ARE PRESENT.
DRAIN AND CLEAN DIFFERENTIAL. CHECK EXCITER RING FOR BROKEN OR CHIPPED TEETH. RETEST VEHICLE.	• ROTATE EXCITER RING, AND CHECK FOR DAMAGE TO TEETH.
TEETH ARE DAMAGED, OR LATERAL RUNOUT OF EXCITER RING IS VISIBLE.	TEETH ARE INTACT, AND NO VISIBLE LATERAL RUNOUT IS OBSERVED.

Continued on the next page

Continued on the next page

EBCM — Electronic Brake Control Module

Continued from the previous page

REPLACE THE EXCITER RING OF AXLE, AND RETEST VEHICLE.

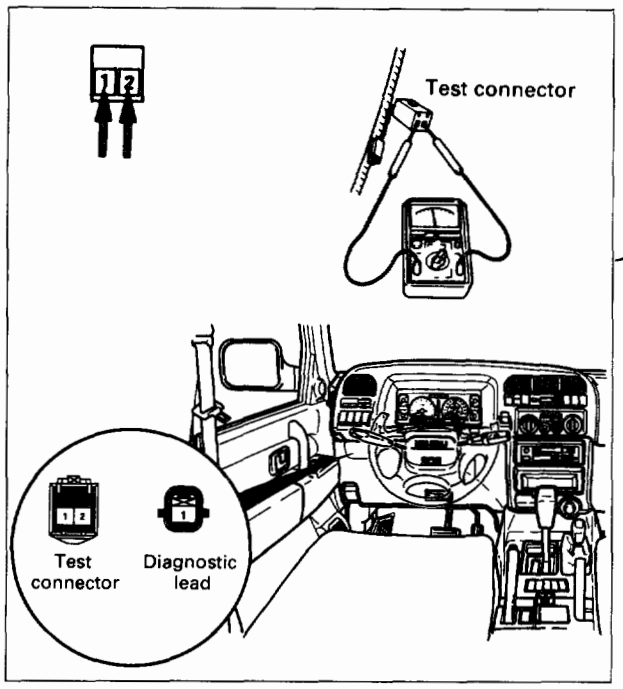

Continued from the previous page

- REINSTALL SENSOR AND RAISE THE REAR WHEELS TO CLEAR THE FLOOR.
- START THE ENGINE, AND TURN THE WHEELS AT 5 MPH.
- USING A VOLTMETER SET ON THE AC SCALE, CHECK FOR VOLTAGE AT THE TWO PINS OF THE SENSOR TEST CONNECTOR.

VOLTAGE UNDER 650 mV ON AC SCALE OR ERRATIC.

REPLACE SPEED SENSOR, AND RECHECK THE OUTPUT.

PROBLEM FOUND; REPAIR CONNECTION(S).

NO CODE 6 INDICATED

REPLACE SPEED SENSOR (THIS FAILURE MAY BE INTERMITTENT DUE TO MOISTURE CONTAMINATION, AND CANNOT ALWAYS BE DETERMINED BY THE ABOVE RESISTANCE CHECK).

VOLTAGE OVER 650 mV ON AC SCALE AND STEADY.

CHECK EBCM AND/OR SPEED SENSOR CONNECTION.

- RECONNECT BATTERY AND EBCM HARNESS CONNECTOR.
- RECONNECT SENSOR HARNESS TO SPEED SENSOR.
- THEN TURN IGNITION ON.

CODE 6 RETURNS

RECHECK ALL PROCEDURE STEPS

IF DEFECTS STILL EXISTS IN SYSTEM AFTER ALL PREVIOUS STEPS, REPLACE EBCM.

EBCM = Electronic Brake Control Module

FLASHOUT DIAGNOSTIC TROUBLE CODE 7

(ISOLATION OUTPUT MISSING OR ANTILOCK VALVE WIRING SHORTED TO GROUND)

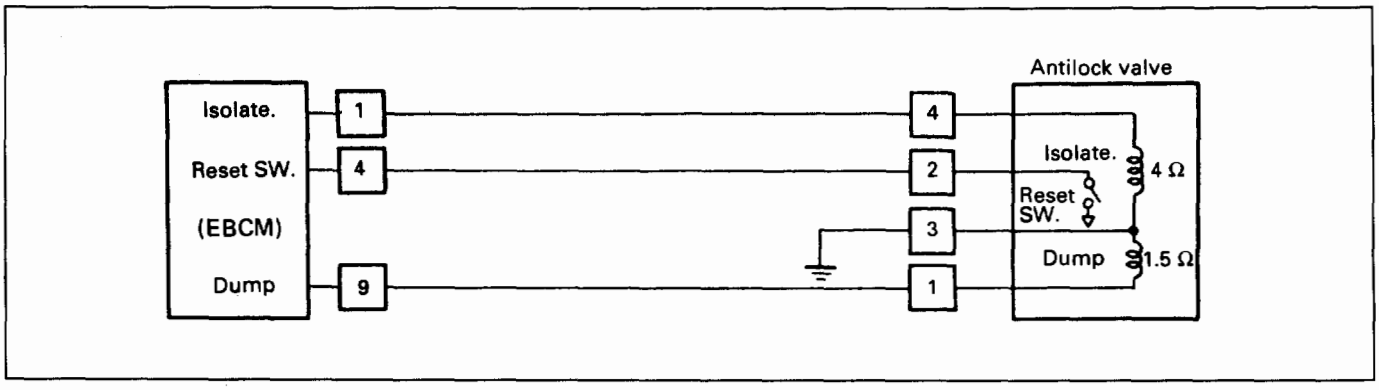

- DISCONNECT THE ANTILOCK VALVE CONNECTOR, AND CHECK FOR RESISTANCE BETWEEN THE VALVE ISOLATION SOLENOID PIN (4) AND THE VALVE GROUND PIN (3) IN THE VALVE CONNECTOR.

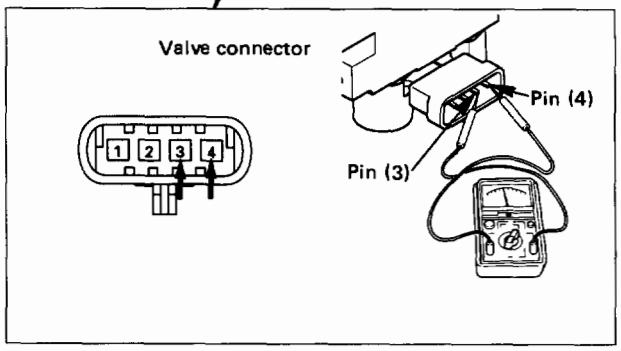

CONSTANT READING OF RESISTANCE UNDER 3 OHMS

REPLACE ANTILOCK VALVE, AND RECHECK THE SELF CHECK.

CONSTANT READING OF RESISTANCE 3 TO 6 OHMS

- DISCONNECT THE BATTERY.
- DISCONNECT THE EBCM HARNESS CONNECTOR FROM EBCM, AND CHECK FOR RESISTANCE BETWEEN THE ISOLATION PIN (1) OF EBCM HARNESS CONNECTOR AND CHASSIS GROUND WHILE SHAKING THE HARNESS.

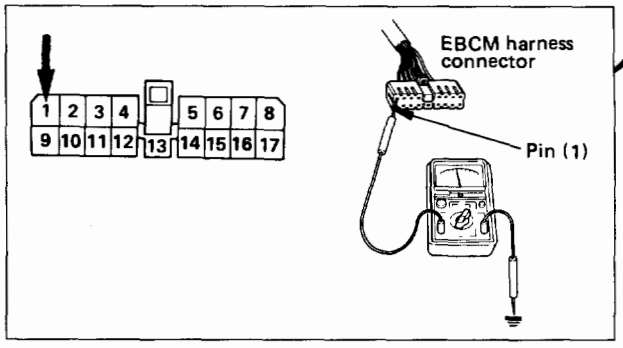

Continued on the next page

EBCM = Electronic Brake Control Module

Continued from the previous page

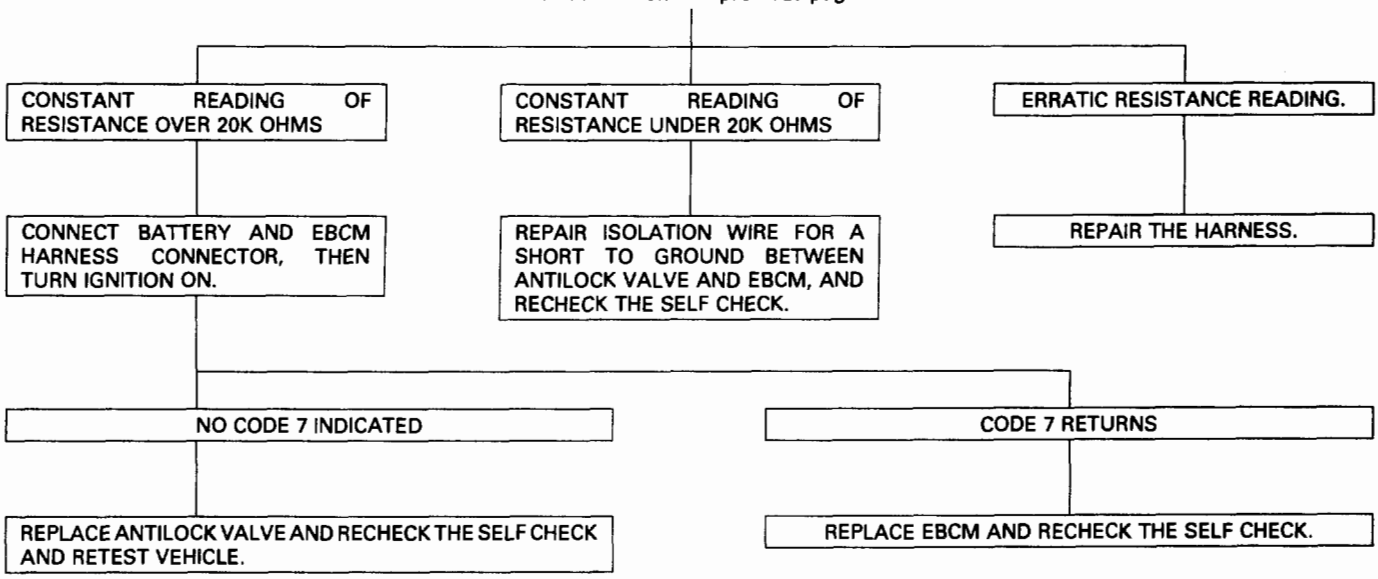

EBCM = Electronic Brake Control Module

FLASHOUT DIAGNOSTIC TROUBLE CODE 8

(DUMP OUTPUT MISSING OR ANTILOCK VALVE WIRING SHORTED TO GROUND)

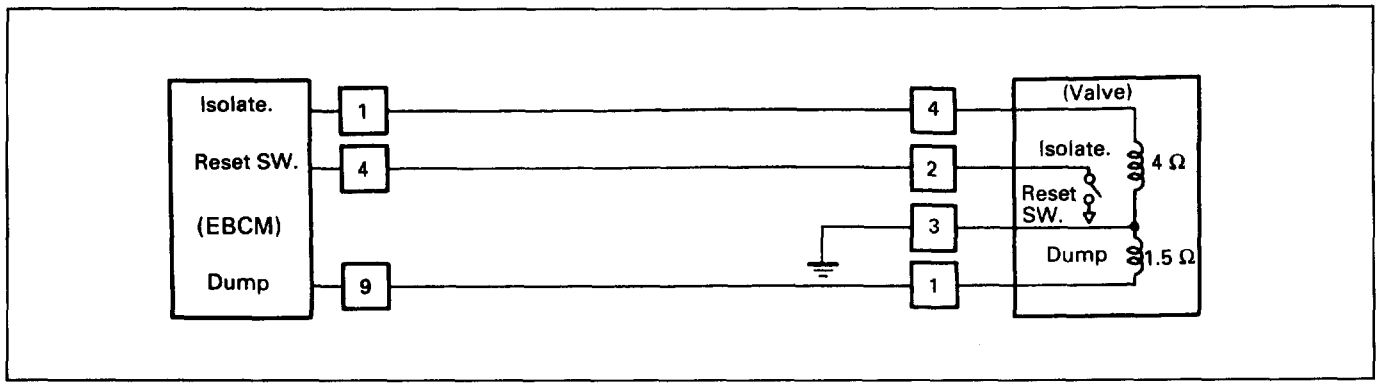

- DISCONNECT THE ANTILOCK VALVE CONNECTOR, AND CHECK FOR RESISTANCE BETWEEN THE VALVE DUMP SOLENOID PIN (1) AND THE VALVE GROUND PIN (3) IN THE VALVE CONNECTOR.

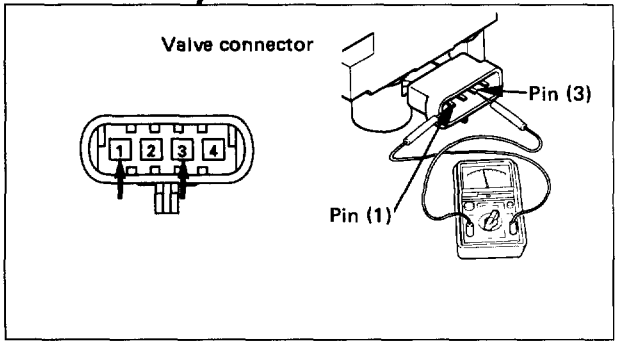

CONSTANT READING OF RESISTANCE UNDER 1 OHM

REPLACE ANTILOCK VALVE, AND RECHECK THE SELF CHECK.

CONSTANT READING OF RESISTANCE 1 TO 3 OHMS

- DISCONNECT THE BATTERY.
- DISCONNECT THE EBCM HARNESS CONNECTOR FROM EBCM, AND CHECK FOR RESISTANCE BETWEEN THE DUMP PIN (9) OF EBCM HARNESS CONNECTOR AND CHASSIS GROUND WHILE SHAKING THE HARNESS.

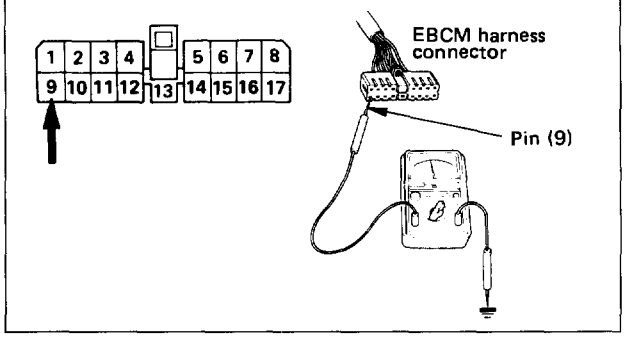

Continued on the next page

EBCM = Electronic Brake Control Module

Continued from the previous page

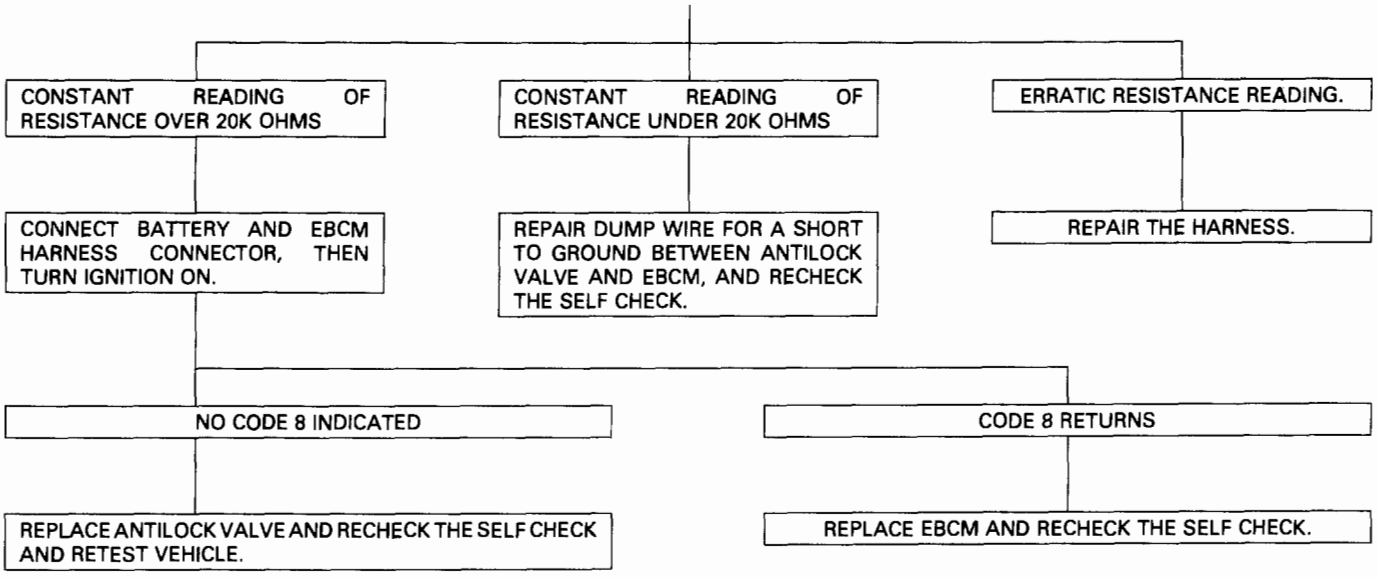

EBCM = Electronic Brake Control Module

FLASHOUT DIAGNOSTIC TROUBLE CODE 9

(HIGH SENSOR RESISTANCE)

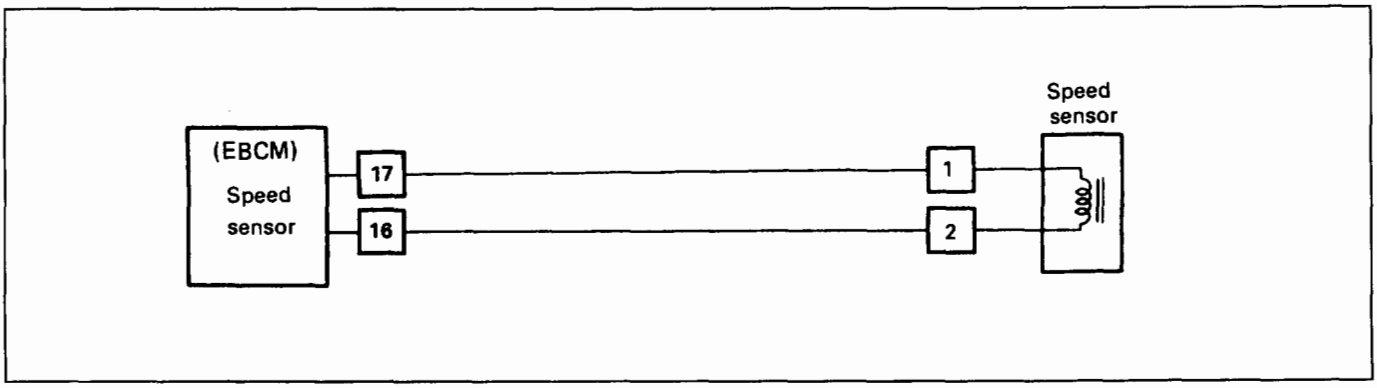

- DISCONNECT THE SENSOR HARNESS CONNECTOR FROM SPEED SENSOR, AND CHECK FOR RESISTANCE BETWEEN THE TWO SENSOR PINS WHILE SHAKING THE HARNESS.

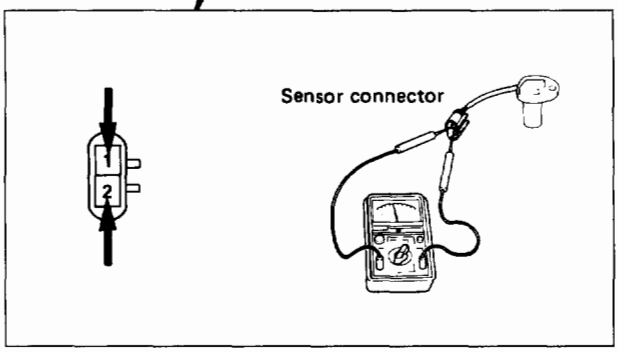

CONSTANT READING OF RESISTANCE OVER 2500 OHMS

REPLACE SENSOR, RECHECK RESISTANCE READING, AND RECHECK THE SELF CHECK.

CONSTANT READING OF RESISTANCE 1000 TO 2500 OHMS

- RECONNECT SENSOR HARNESS CONNECTOR TO SPEED SENSOR.
- DISCONNECT BATTERY AND DISCONNECT EBCM HARNESS CONNECTOR FROM EBCM, AND CHECK FOR RESISTANCE BETWEEN PIN (17) AND PIN (16) IN EBCM HARNESS CONNECTOR WHILE SHAKING THE HARNESS.

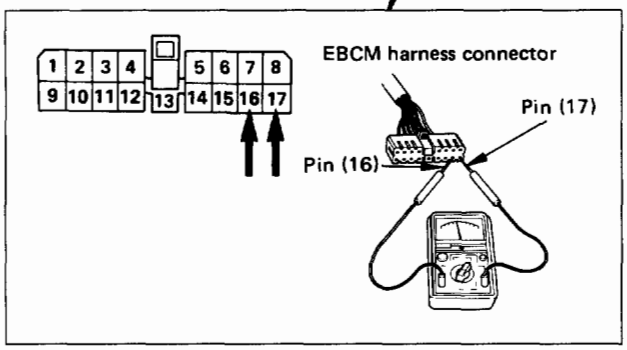

ERRATIC RESISTANCE READING.

REPLACE SENSOR, RECHECK RESISTANCE READING, AND RECHECK THE SELF CHECK.

EBCM – Electronic Brake Control Module

Continued on the next page

Continued from the previous page

CONSTANT READING OF RESISTANCE 1000 TO 2500 OHMS

CHECK EBCM AND/OR SPEED SENSOR CONNECTION.

CONSTANT READING OF RESISTANCE OVER 2500 OHMS

REPAIR OPEN SENSOR WIRES FROM EBCM TO SPEED SENSOR, CHECK FOR DIRTY OR LOOSE PIN CONNECTIONS AT ALL CONNECTORS, AND RECHECK THE SELF CHECK.

ERRATIC RESISTANCE READING.

REPAIR THE HARNESS.

- RECONNECT BATTERY AND EBCM HARNESS CONNECTOR.
- RECONNECT SENSOR HARNESS TO SPEED SENSOR.
- THEN TURN IGNITION ON.

PROBLEM FOUND; REPAIR CONNECTION(S).

NO CODE 9 INDICATED

REPLACE SPEED SENSOR (THIS FAILURE MAY BE INTERMITTENT DUE TO MOISTURE CONTAMINATION, AND CANNOT ALWAYS BE DETERMINED BY THE ABOVE RESISTANCE CHECK).

CODE 9 RETURNS

RECHECK ALL PROCEDURE STEPS.

IF DEFECTS STILL EXISTS IN SYSTEM AFTER ALL PREVIOUS STEPS, REPLACE EBCM.

EBCM = Electronic Brake Control Module

FLASHOUT DIAGNOSTIC TROUBLE CODE 10

(LOW SENSOR RESISTANCE)

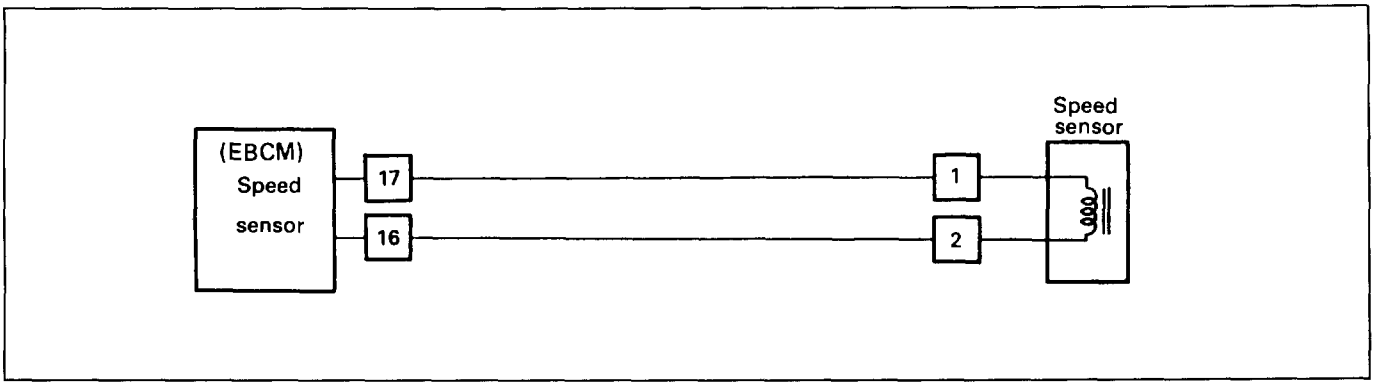

- DISCONNECT THE SENSOR HARNESS CONNECTOR FROM SPEED SENSOR, AND CHECK FOR RESISTANCE BETWEEN THE TWO SENSOR PINS WHILE SHAKING THE HARNESS.

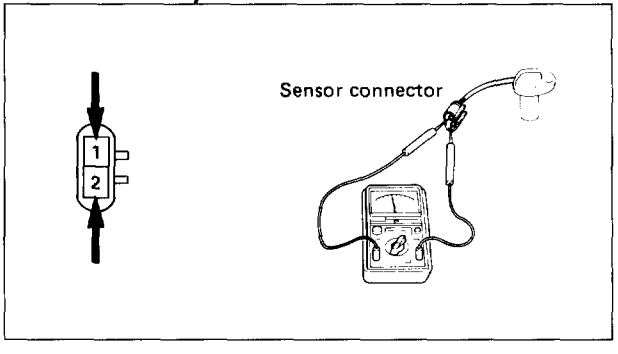

CONSTANT READING OF RESISTANCE UNDER 1000 OHMS

REPLACE SENSOR, AND RECHECK RESISTANCE READING, AND RECHECK THE SELF CHECK.

CONSTANT READING OF RESISTANCE 1000 TO 2500 OHMS

- RECONNECT SENSOR HARNESS CONNECTOR TO SPEED SENSOR.
- DISCONNECT BATTERY, AND DISCONNECT EBCM HARNESS CONNECTOR FROM EBCM, AND CHECK FOR RESISTANCE BETWEEN PIN (16) IN EBCM HARNESS CONNECTOR AND CHASSIS GROUND WHILE SHAKING THE HARNESS.

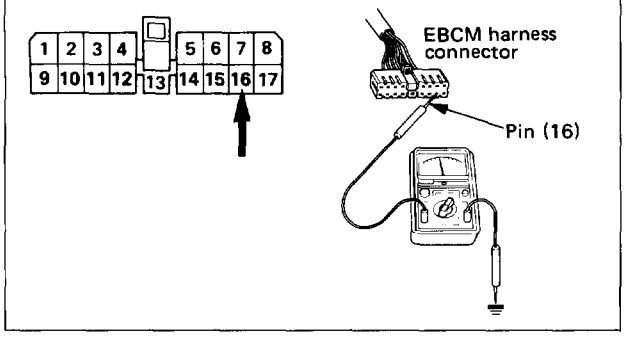

ERRATIC RESISTANCE READING.

REPLACE SENSOR, RECHECK RESISTANCE READING, AND RECHECK THE SELF CHECK.

EBCM = Electronic Brake Control Module

Continued on the next page

Continued from the previous page

CONSTANT READING OF RESISTANCE OVER 20K OHMS

REPAIR SENSOR WIRE FOR A SHORT TO GROUND BETWEEN EBCM AND SENSOR, CHECK FOR FRAYED OR SHORTED WIRES IN THE CONNECTOR, AND RECHECK THE SELF CHECK.

CONSTANT READING OF RESISTANCE UNDER 20K OHMS

- DISCONNECT THE SENSOR HARNESS CONNECTOR FROM SPEED SENSOR, AND CHECK FOR RESISTANCE BETWEEN PIN (17) AND PIN (16) IN EBCM HARNESS CONNECTOR WHILE SHAKING THE HARNESS.

ERRATIC RESISTANCE READING.

REPAIR THE HARNESS.

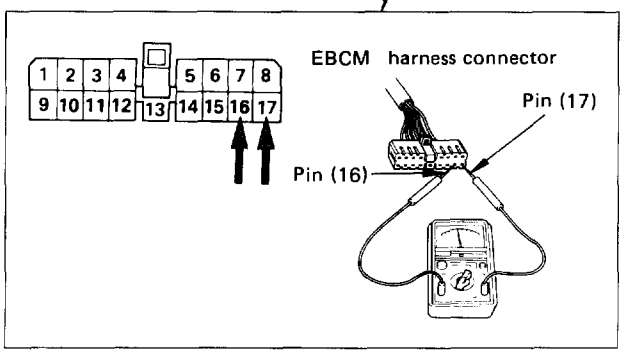

CONSTANT READING OF RESISTANCE OVER 20K OHMS

- RECONNECT BATTERY AND EBCM HARNESS CONNECTOR.
- RECONNECT SENSOR HARNESS TO SPEED SENSOR.
- THEN TURN IGNITION ON.

CONSTANT READING OF RESISTANCE UNDER 20K OHMS

REPAIR SENSOR WIRES FOR A SHORT CIRCUIT BETWEEN THEM, AND CHECK FOR FRAYED WIRE OF SHORTED CONNECTORS, AND RECHECK THE SELF CHECK.

ERRATIC RESISTANCE READING.

REPAIR THE HARNESS.

NO CODE 10 INDICATED

REPLACE SENSOR AND RECHECK THE SELF CHECK AND RETEST VEHICLE.

CODE 10 RETURNS

REPLACE EBCM AND RECHECK THE SELF CHECK.

EBCM = Electronic Brake Control Module

FLASHOUT DIAGNOSTIC TROUBLE CODE 11

(STOPLIGHT SWITCH CIRCUIT DEFECTIVE CONDITION INDICATED ONLY WHEN DRIVING ABOVE 56 km/h (35 mph))

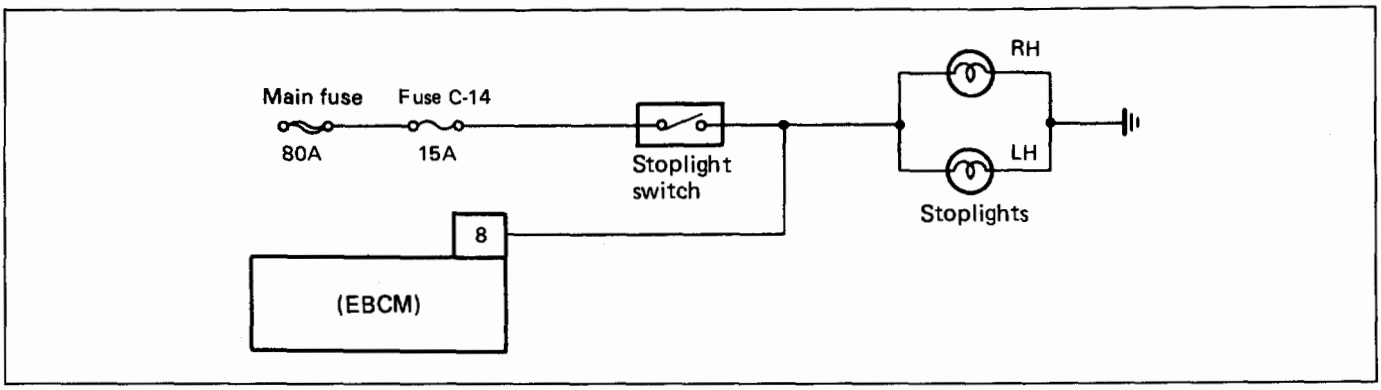

NOTE: A false Code 11 may be set under any of the following conditions:

- If the drive presses on the brake pedal while starting the vehicle.
- If the driver "rides" the brake pedal while driving (pressure applied to pedal without stopping the vehicle).
- If the brake light (stoplight) bulbs are burned out or inoperative.

If Code 11 is an intermittent complaint, use the test drive to see if driver habits are causing the code to set without any vehicle fault. Make sure the brake pedal switch is adjusted and working properly.

- APPLY THE BRAKE PEDAL AND CHECK FOR STOP LIGHTS.

DOES NOT OPERATE CORRECTLY

- REPAIR OR REPLACE STOPLIGHT SWITCH.
- CHECK FOR BLOWN STOPLIGHT FUSE OR BLOWN/ MISSING STOPLIGHT BULBS.

RECHECK THE SELF CHECK.

OPERATES CORRECTLY

- DISCONNECT EBCM HARNESS CONNECTOR FROM EBCM AND CHECK FOR VOLTAGE BETWEEN PIN (8) OF EBCM HARNESS CONNECTOR AND CHASSIS GROUND WHILE STEPPING ON THE BRAKE PEDAL WHILE SHAKING THE HARNESS.

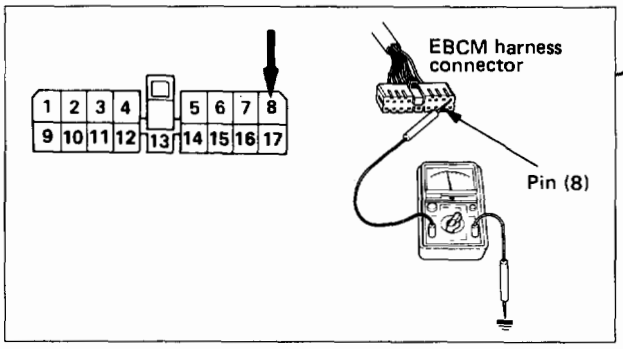

Continued on the next page

EBCM = Electronic Brake Control Module

Continued from the previous page

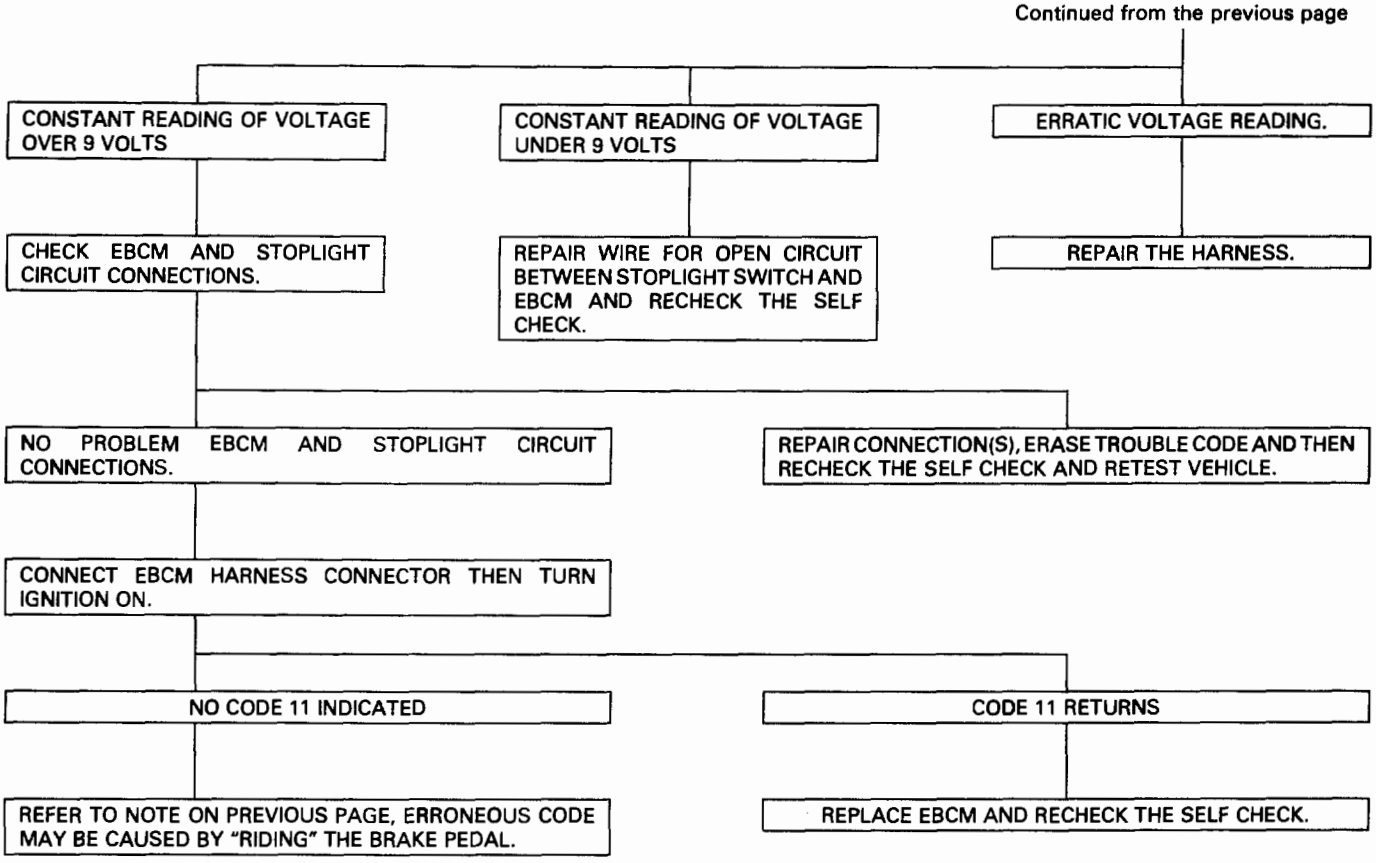

EBCM — Electronic Brake Control Module

FLASHOUT DIAGNOSTIC TROUBLE CODE 13/14/15

(EBCM FAILURE)

- **REPLACE THE EBCM AND RECHECK SELF CHECK.**

EBCM – Electronic Brake Control Module

ON-VEHICLE SERVICE

REAR WHEEL ANTILOCK ELECTRONIC BRAKE CONTROL MODULE (EBCM) REPLACEMENT

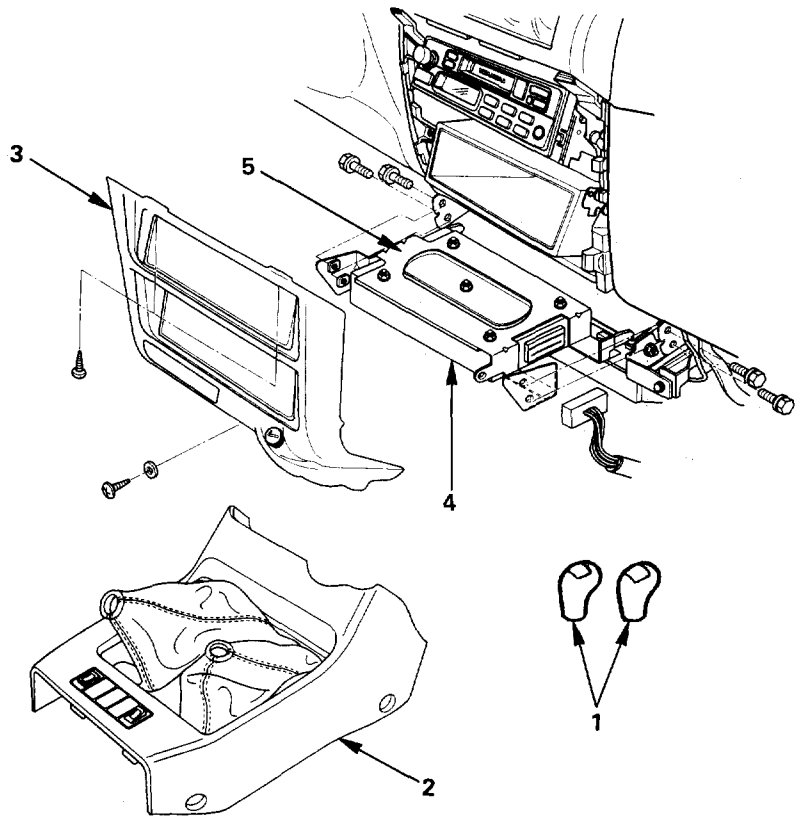

Removal steps
1. Shift knob
2. Front console assembly
3. Lower cluster assembly
4. EBCM assembly
5. Bracket

Installation steps
To install, follow the removal steps in the reverse order.

Fig. 5A3-9

REMOVAL

1. **Shift knob**
2. **Front console assembly**
   - To remove the front console, refer to section 10 "Body".
3. **Lower cluster assembly**
4. **EBCM assembly**
   - Disconnect the EBCM connector from EBCM.
   - Remove four EBCM fixing bolts.
5. **Bracket**
   - Disconnect the bracket from EBCM.

INSTALLATION

5. **Bracket**
   - Connect the bracket to the EBCM.
4. **EBCM assembly**
   - Tighten the EBCM assembly fixing bolts to the specified torque.

Torque	N·m (lb·in)	8 (69)

3. **Lower cluster assembly**
2. **Front console assembly**
1. **Shift knob**

ANTILOCK (ISOLATION/DUMP) VALVE REPLACEMENT

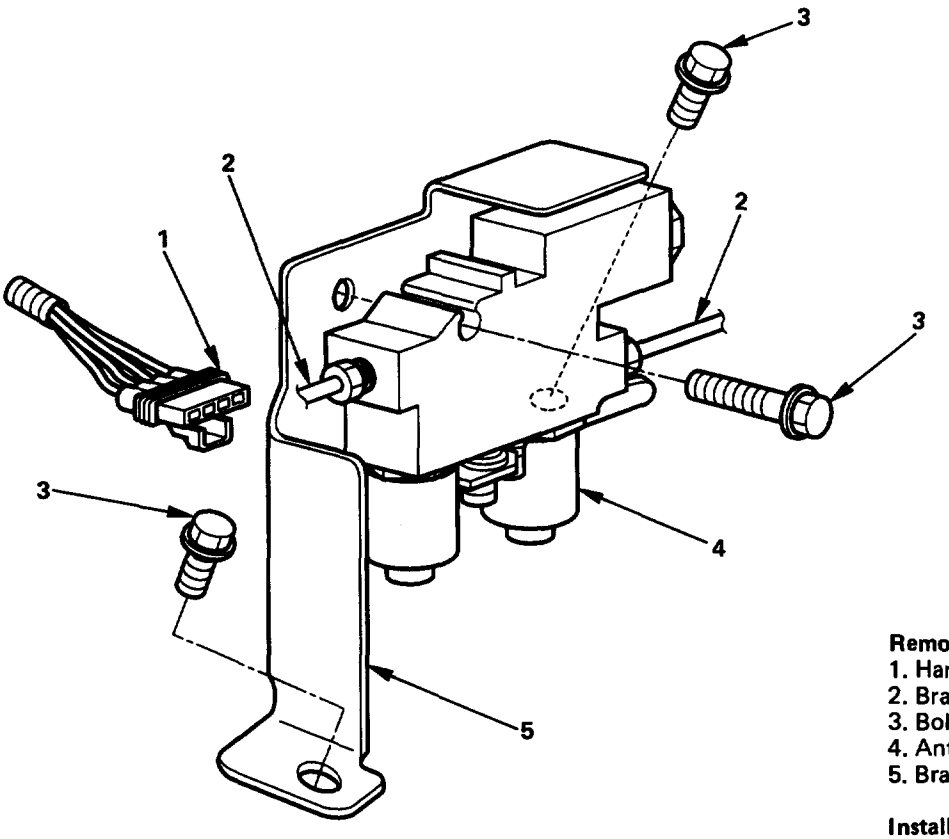

Removal steps
1. Harness connector
2. Brake pipe
3. Bolt
4. Antilock valve
5. Bracket

Installation steps
To install, follow the removal steps in the reverse order.

Fig. 5A3-10

NOTE:
The antilock valve is not serviceable. It should be replaced when necessary.

REMOVAL

1. **Harness connector**
2. **Brake pipe**
3. **Bolt**
4. **Antilock valve**
5. **Bracket**

INSTALLATION

To install, follow the removal steps in the reverse order, noting the following points;

1. Tighten the antilock valve fixing bolts to the specified torque.

Bolt Torque	N·m (lb·ft)	24 (18)

2. Tighten the brake pipes to the specified torque.

Brake Pipe Torque	N·m (lb·in)	12 (104)

- Bleed the brake system as outlined in "Hydraulic Brakes" (Sec. 5A).

SPEED SENSOR REPLACEMENT

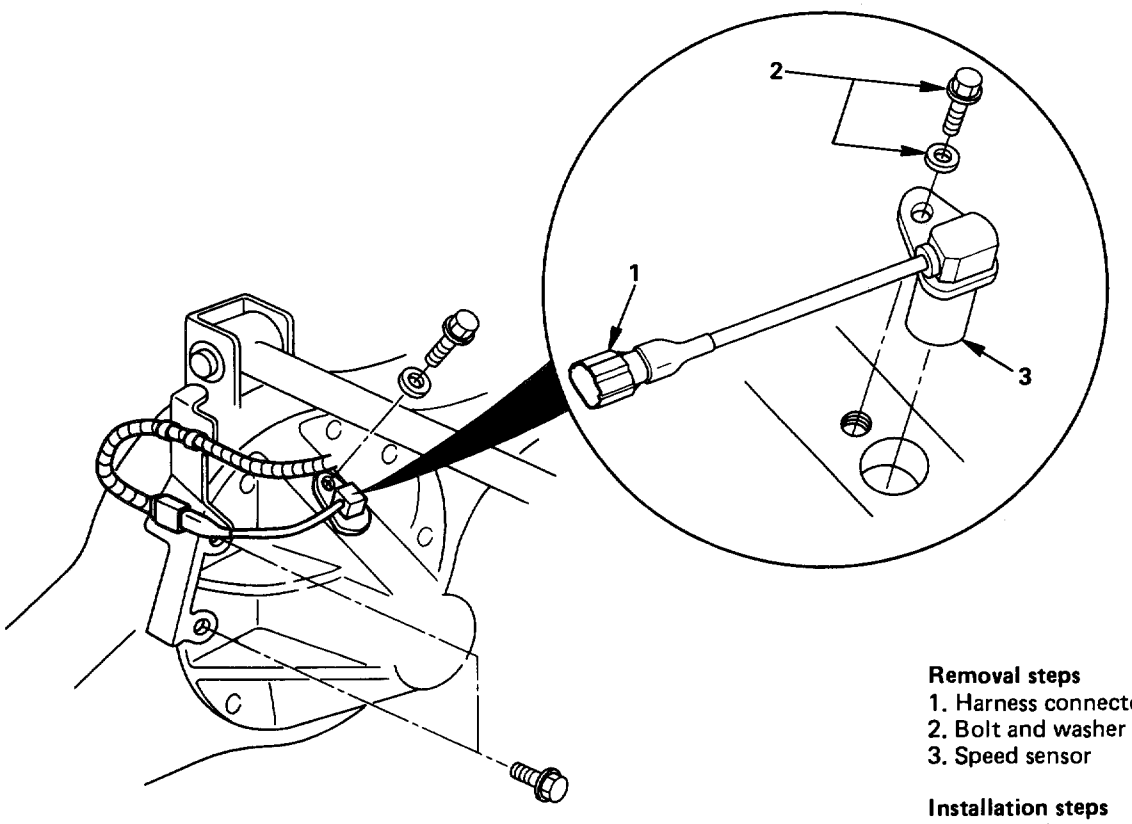

Removal steps
1. Harness connector
2. Bolt and washer
3. Speed sensor

Installation steps
To install, follow the removal steps in the reverse order.

Fig. 5A3-11

NOTE:
The speed sensor is not serviceable. It should be replaced when necessary.

REMOVAL

1. **Harness connector**
2. **Bolt and washer**
3. **Speed sensor**

INSTALLATION

To install, follow the removal steps in the reverse order, noting the following points;

1. Tighten the bolt to the specified torque.

Bolt Torque	N·m (lb·ft)	24 (18)

NOTE:
See "Rear Axle" (Sec. 4B) for exciter ring service.

MAIN DATA AND SPECIFICATIONS

TORQUE SPECIFICATIONS

N·m (lb·ft)

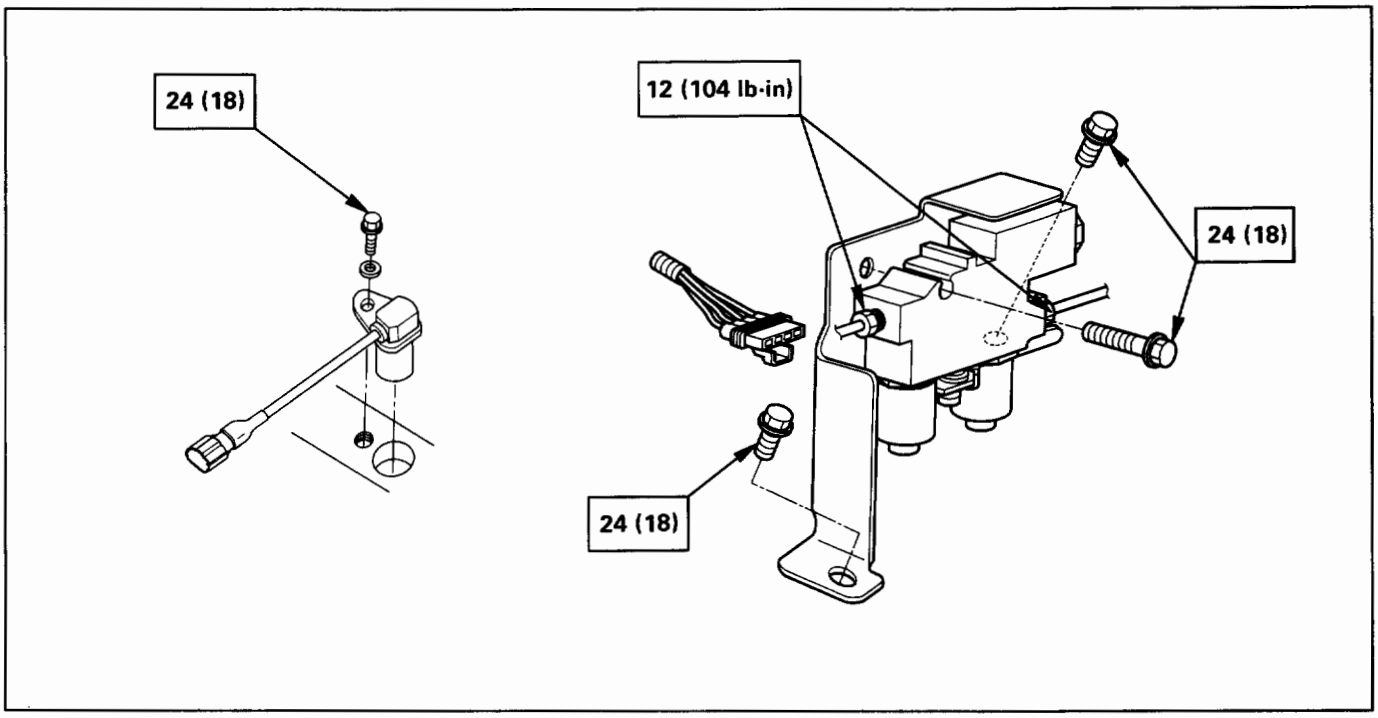

Fig. 5A3-12

MEMO

SECTION 5A4

4-WHEEL ANTILOCK BRAKE SYSTEM (ABS)

CAUTION
All brake attaching fasteners are an important attaching part in that they could affect performance of vital parts and systems, and/or could result in major repair expense. They must be replaced with one of the same part number or with an equivalent part if replacement becomes necessary. Do not use replacement parts of lesser quality or substitute design. Torque values must be used as specified during reassembly to assure proper retention of these parts.

CONTENTS

General Description 5A4– 3
System Components 5A4– 3
Electronic Brake Control Module (EBCM) 5A4– 3
Hydraulic Unit 5A4– 3
ABS Warning Light 5A4– 4
Wheel Speed Sensor 5A4– 4
G-Sensor 5A4– 4
Normal and Antilock Braking 5A4– 4
Brake Pedal Travel 5A4– 4
Abbreviation 5A4– 4
Diagnosis 5A4– 5
General Information 5A4– 5
ABS System Service Precautions 5A4– 5
Computer System Service Precautions 5A4– 5
General Service Precautions 5A4– 5
Note on Intermittents 5A4– 6
Test Driving ABS Complaint Vehicles . . . 5A4– 6
"ABS" Warning Light 5A4– 6
Normal Operation 5A4– 6
Basic Diagnostic Flow Chart 5A4– 7
Basic Inspection Procedure 5A4– 8
TECH 1 TOOL 5A4–10
1. What can be done with TECH 1 . . . . . 5A4–10
2. How to Use TECH 1 . . . . . 5A4–11
3. Explanation of Modes 5A4–15
Mode F0: Data List 5A4–16
Mode F2: Trouble Code 5A4–18
Mode F3: Snapshot 5A4–19
Mode F4: Clear Code 5A4–20
Mode F5: Actuator Test 5A4–21
Mode F6: Wheel Sensors 5A4–31
Pin-Out Checks 5A4–33
Circuit Diagram 5A4–34
Part Location 5A4–37
Symptom Diagnosis 5A4–38
CHART A-1 1) ABS Works Frequently but Vehicle does not Decelerate 5A4–39
CHART TA-1 1) ABS Works Frequently but Vehicle does not Decelerate 5A4–40
CHART A-2 2) Uneven Braking Occurs while ABS Works 5A4–41
CHART TA-2 2) Uneven Braking Occurs while ABS Works 5A4–42
CHART A-3, TA-3 3) The Wheels are Locked 5A4–43
CHART A-4 4) Brake Pedal Feel is Abnormal 5A4–44
CHART A-5 , TA-5 5) Braking Sound (from Hydraulic Unit) is Heard while not Braking 5A4–45
Diagnosis by "ABS" Warning Light Illumination Pattern 5A4–46
Diagnostic Trouble Codes (DTCs) 5A4–47
1. How to Display and Erase DTCs . . . 5A4–47
2. Diagnostic Trouble Codes 5A4–49
CHART B-1 With the Key in the ON Position (before Starting the Engine), Warning Light (W/L) is not Actuated 5A4–50
CHART B-2 "ABS" Light Flashes Twice with Key ON 5A4–51
CHART B-3 EBCM Abnormality (Diagnostic Trouble Code 14) 5A4–52
CHART B-4 Power Voltage Drop (Diagnostic Trouble Code 15) 5A4–53
CHART B-5 G-Sensor Circuit (Diagnostic Trouble Code 21) 5A4–54
CHART B-6 Brake Switch Trouble (Diagnostic Trouble Code 22) 5A4–55
CHART B-7 Abnormal Transmission Input (A/T Model)(Diagnostic Trouble Code 23) 5A4–56
CHART B-7 Abnormal Transmission Input (M/T Model)(Diagnostic Trouble Code 23) 5A4–57
CHART B-8 Hydraulic Unit (HU) Pump Motor and Motor Relay Circuit (Diagnostic Trouble Code 32) 5A4–58
CHART B-9 Solenoid Valve Abnormality (Diagnostic Trouble Code 41, 42, & 44) 5A4–59
CHART B-10 Valve Relay Abnormality (Diagnostic Trouble Code 45) 5A4–60

CHART B-11 Speed Sensor Disconnection (Diagnostic Trouble Code 51, 52, 53, & 54) 5A4–61
CHART B-12 Speed Sensor Short Circuit (Diagnostic Trouble Code 61, 62, 63, & 64) 5A4–62
CHART B-13, TB-13 Sensor Signal Input Abnormality (Diagnostic Trouble Code 65) 5A4–63
Unit Inspection Procedure 5A4–64
CHART C-1 G-Sensor Unit Inspection Procedure 5A4–65
CHART C-2 Sensor Output Inspection Procedure 5A4–66
CHART TC-2 Sensor Output Inspection Procedure 5A4–67
CHART C-3 4WD Switch Inspection Procedure 5A4–68
CHART TC-3 4WD Switch Inspection Procedure 5A4–69
CHART C-4 Transmission Input Inspection Procedure (A/T Model) 5A4–70
CHART C-4 Transmission Input Inspection Procedure (M/T Model). . . . 5A4–71
CHART TC-4 Transmission Input Inspection Procedure 5A4–72
On-Vehicle Service 5A4–73
Hydraulic Unit 5A4–73
Electronic Brake Control Module (EBCM) 5A4–74
G-Sensor. 5A4–75
Front Wheel Speed Sensor. 5A4–76
Rear Wheel Speed Sensor 5A4–78
Special Tools. 5A4–79

GENERAL DESCRIPTION

The Antilock Brake System (ABS) works on all four wheels. A combination of wheel speed sensor and Electronic Brake Control Module (EBCM) can determine when a wheel is about to stop turning and adjust brake pressure to maintain best braking. This system helps the driver maintain greater control of the vehicle under heavy braking conditions.

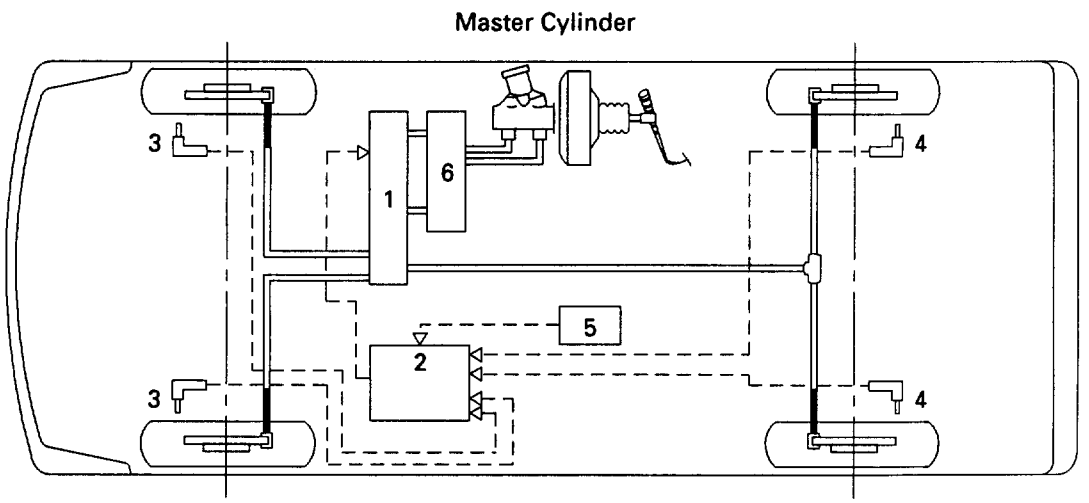

1. Hydraulic unit
2. Electronic brake control module (EBCM)
3. Front wheel speed sensor
4. Rear wheel speed sensor
5. G-sensor
6. Proportioning and bypass (P&B) valve (Refer to "Hydraulic Brakes"(Sec. 5A).)

- - - - - - - - Electric

═══════ Hydraulic

Fig. 5A4-1

SYSTEM COMPONENTS

The Antilock Brake System consists of a Hydraulic Unit, Electronic Brake Control Module (EBCM), four Wheel Speed Sensors, Warning Light, and G-sensor.

ELECTRONIC BRAKE CONTROL MODULE (EBCM)

The EBCM consists of ABS control circuits, fault detector, and a fail-safe. It drives the hydraulic unit according to the signal from each sensor, cancelling ABS to return to normal braking when a malfunction has occurred in the ABS.

The EBCM is self-diagnosing function can indicate faulty circuits during diagnosis.

HYDRAULIC UNIT

The hydraulic unit is mounted on the engine room front right side. It consists of a Motor, Plunger Pump, Solenoid Valves and Check Valve.

On the outside, the relay box containing a motor relay and a valve relay is installed.

Solenoid Valves; Reduces or holds the caliper fluid pressure for each front disc brake or both rear disc brakes according to the signal sent from the EBCM.

Reservoir; Temporarily holds the brake fluid that returns from the front and rear disc brake caliper so that pressure of front disc brake caliper can be reduced smoothly.

Plunger Pump; Feeds the brake fluid held in the reservoir to the master cylinder.

Motor; Drives the pump according to the signal from EBCM.

Check Valve; Controls the brake fluid flow.

ABS WARNING LIGHT

Vehicles equipped with the Antilock Brake System have an amber "ABS" warning light in the instrument panel. The "ABS" warning light will illuminate if a malfunction in the Antilock Brake System is detected by the Electronic Brake Control Module (EBCM). In case of an electronic malfunction, the EBCM will turn "ON" the "ABS" warning light and disable the Antilock braking function.

The "ABS" light will turn "ON" during engine starting and will usually stay "ON" for approximately three seconds after the ignition switch is returned to the "ON" position.

If the "ABS" light stays "ON" after engine start-up, or comes "ON" and stays "ON" while driving, the Antilock Brake System should be inspected for a malfunction according to the diagnosis procedure.

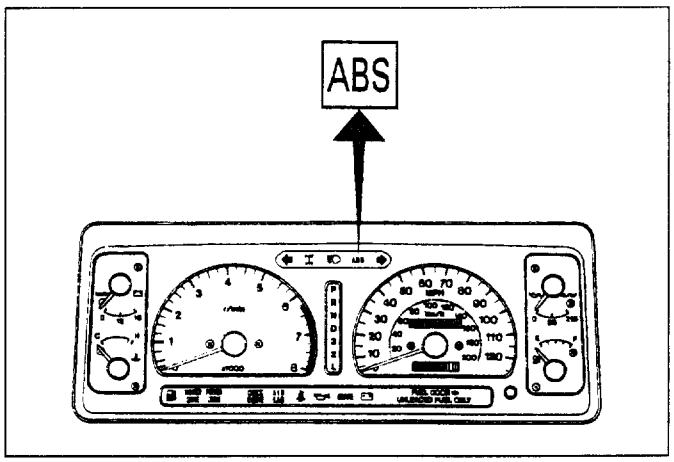

Fig. 5A4-2

WHEEL SPEED SENSOR

It consists of a sensor and a rotor. The sensor is attached to the knuckle on the front wheels and to the axle shaft bearing holder on the rear wheels. The rotor is press-fit in the axle shaft.

The flux generated from electrodes magnetized by a magnet in the sensor varies due to rotation of the rotor, and the electromagnetic induction generates alternating voltage in the coil. This voltage draws a "sine curve" with the frequency proportional to rotor speed and it allows detection of wheel speed.

G-SENSOR

The G-sensor installed inside the center console detects the vehicle deceleration speed and sends a signal to the EBCM. It is normally on, and is turned off when the vehicle deceleration speed exceeds about 0.35G. In 4WD operation, all four wheels may be decelerated in almost the same phase, since all wheels are connected mechanically. This tendency is noticeable particularly on roads with low friction coefficient, and the ABS control is adversely affected.

The G-sensor judges whether the friction coefficient of road surface is low or high, and changes the EBCM's operating system to ensure ABS control.

NORMAL AND ANTILOCK BRAKING

Under normal driving conditions, the Antilock Brake System functions the same as a standard power assisted brake system. However, with the detection of wheel lock-up, a slight bump or kick-back will be felt in the brake pedal. This pedal "bump" will be followed by a series of short pedal pulsations which occurs in rapid succession. The brake pedal pulsation will continue until there is no longer a need for the antilock function or until the vehicle is stopped. A slight ticking or popping noise may be heard during brake applications when the Antilock features is being used.

When the Antilock feature is being used, the brake pedal may rise even as the brakes are being applied. This is also normal. Maintaining a constant force on the pedal will provide the shortest stopping distance.

BRAKE PEDAL TRAVEL

Vehicles equipped with the Antilock Brake System may be stopped by applying normal force to the brake pedal. Although there is no need to push the pedal beyond the point where it stops or holds the vehicle, by applying more force the pedal will continue to travel toward the floor.

This extra brake pedal travel is normal.

ABBREVIATIONS

Several abbreviations are commonly used throughout this section:

ABS ..... Antilock Brake System
CKT ..... Circuit
DLC ..... Data Link Connector
EBCM ..... Electronic Brake Control Module
FL ..... Front Left
FR ..... Front Right
GEN ..... Generator
HU ..... Hydraulic Unit
MV ..... Millivolts
RL ..... Rear Left
RR ..... Rear Right
RPS ..... Revolution per Second
UVR ..... Valve Relay
VDC ..... DC Volts
VAC ..... AC Volts
W/L ..... Warning Light
WSS ..... Wheel Speed Sensor

DIAGNOSIS

GENERAL INFORMATION

ABS troubles can be classified to two types, those which can be detected by the ABS warning light and those which can be detected as a vehicle abnormality by the driver.

In either case, locate the fault in accordance with the "BASIC DIAGNOSTIC FLOWCHART" and repair. Please refer to Section 5A, 5A1, 5A2, 5C for the diagnosis of mechanical troubles such as brake noise, brake judder (brake pedal or vehicle vibration felt when braking), uneven braking, and parking brake trouble.

ABS SYSTEM SERVICE PRECAUTIONS

Required Tools and Items

- Box Wrench
- Brake Fluid
- Special Tool

Some diagnosis procedures in this section require the installation of a special tool.

PINOUT BOX

In order to prevent damage to the 35-pin Electronic Brake Control Module (EBCM) connector, J-35592 pinout box should be installed on the EBCM connector prior to probing any circuit with the digital multimeter. This pinout box is to be used combined with J-35616 connector test adapter kit.

IMPORTANT

Do not probe the 35-pin EBCM connector without installing J-35592 pinout box. Damage to connector terminals may occur if the pinout box is not installed, resulting in improper system operation. The following procedure should be used to install J-35592 pinout box.

1. Ignition must be "OFF" when installing or removing the 35-pin EBCM connector.

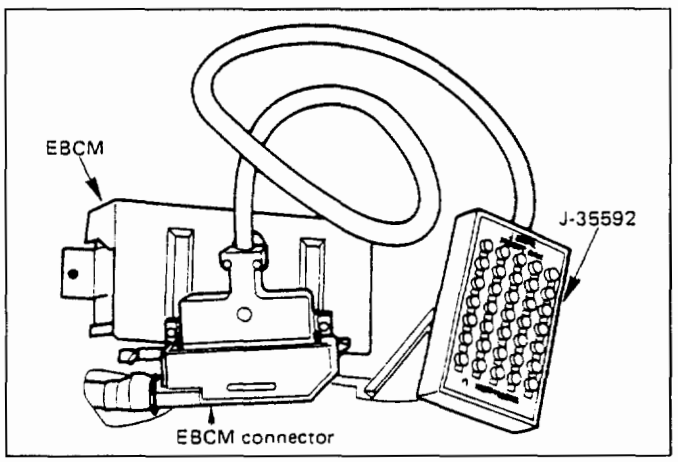

Fig. 5A4-3

2. Disconnect the 35-pin EBCM harness connector by depressing the connector locking plate and rotating the connector toward the front of vehicle.
3. Inspect the 35-pin connector for damage. Connect J-35592 to the 35-pin connector.
4. Proceed with test as outlined in the diagnostic procedure.

J-39200 HIGH IMPEDANCE MULTIMETER

When circuit measurements are requested, use a circuit tester with high impedance.

COMPUTER SYSTEM SERVICE PRECAUTIONS

The Antilock Brake System interfaces directly with the Electronic Brake Control Module (EBCM) which is a control computer that is similar in some regards to the Engine Control Module. These modules are designed to withstand normal current draws associated with vehicle operation. However, care must be taken to avoid overloading any of the EBCM circuits. In testing for opens or shorts, do not ground or apply voltage to any of the circuits unless instructed to do so by the appropriate diagnostic procedure. These circuits should only be tested with a high impedance multimeter (J-39200) or special tools as described in this section. Power should never be removed or applied to any control module with the ignition in the "ON" position. Before removing or connecting battery cables, fuses or connectors, always turn the ignition switch to the "OFF" position.

GENERAL SERVICE PRECAUTIONS

The following are general precautions which should be observed when servicing and diagnosing the Antilock Brake System and/or other vehicle systems. Failure to observe these precautions may result in Antilock Brake System damage.

- If welding work is to be performed on the vehicle using an electric arc welder, the EBCM and valve block connectors should be disconnected before the welding operation begins.
- The EBCM and valve block connectors should never be connected or disconnected with the ignition "ON".
- Hydraulic units of the Antilock Brake System are not separately serviceable and must be replaced as assemblies. Do not disassemble any component which is designated as non-serviceable in this Section.

- If only rear wheels are rotated using jacks or drum tester, the system will diagnose a speed sensor malfunction and the "ABS" warning light will illuminate. But actually no trouble exists. After inspection stop the engine once and re-start it, then make sure that the "ABS" warning light does not illuminate.

If the battery has been discharged

The engine may stall if the battery has been completely discharged and the engine is started via a jumper cable. This is because the Antilock Brake System (ABS) requires a large quantity of electricity. In this case, wait until the battery is recharged, or set the ABS to a non-operative state by removing the fuse for the ABS (40A). After the battery has been recharged, stop the engine and install the ABS fuse. Start the engine again, and confirm that the ABS warning light does not light.

NOTE ON INTERMITTENTS

As with virtually any electronic system, it is difficult to identify an intermittent failure. In such a case duplicating the system malfunction during a test drive or a good description of vehicle behavior from the customer may be helpful in locating a "most likely" failed component or circuit. The symptom diagnosis chart may also be useful in isolating the failure. Most intermittent problems are caused by faulty electrical connections or wiring. When an intermittent failure is encountered, check suspect circuits for:

- Suspected harness damage.
- Poor mating of connector halves or terminals not fully seated in the connector body (backed out).
- Improperly formed or damaged terminals.

TEST DRIVING ABS COMPLAINT VEHICLES

In case that there has been an abnormality in the lighting pattern of "ABS" warning light, the fault can be located in accordance with the "DIAGNOSIS BY 'ABS' WARNING LIGHT ILLUMINATION PATTERN". In case of such trouble as can be detected by the driver as a vehicle symptom, however, it is necessary to give a test drive following the test procedure mentioned below, thereby reproducing the symptom for trouble diagnosis on a symptom basis:

1. Start the engine and make sure that the "ABS" W/L goes OFF. If the W/L remains ON, it means that the Diagnostic Trouble Code (DTC) is stored. Therefore, read the code and locate the fault.
2. Start the vehicle and accelerate to 30 km/h (19 mph) or more.
3. Slowly brake and stop the vehicle completely.
4. Then restart the vehicle and accelerate to 40 km/h (25 mph) or more.
5. Brake at a time so as to actuate the ABS and stop the vehicle.
6. Be cautious of abnormality during the test. If the W/L is actuated while driving, read the DTC and locate the fault.
7. If the abnormality is not reproduced by the test, make best efforts to reproduce the situation reported by the customer.
8. If the abnormality has been detected, repair in accordance with the "SYMPTOM DIAGNOSIS".

NOTE:

- Be sure to give a test drive on a wide, even road with a small traffic.
- If an abnormality is detected, be sure to suspend the test and start trouble diagnosis at once.

"ABS" WARNING LIGHT

When ABS trouble occurs to actuate "ABS" warning light, the trouble code corresponding to the trouble is stored in the EBCM. Only ordinary brake is available with ABS being unactuated. Even when "ABS" warning light is actuated, if the starter switch is set ON after setting it OFF once, the EBCM checks up on the entire system and, if there is no abnormality, judges ABS to work currently and the warning light is lit normally even though the trouble code is stored.

NOTE:

- Illumination of the "ABS" warning light indicates that antilock braking is no longer available. Power assisted braking without antilock control is still available.

NORMAL OPERATION

"ABS" WARNING LIGHT

When the ignition is first moved from "OFF" to "RUN", the amber "ABS" warning light will turn "ON". The "ABS" warning light will turn "ON" during engine starting and will usually stay "ON" for approximately three seconds after the ignition switch is returned to the "ON" position. The warning light should remain "OFF" at all other times.

BASIC DIAGNOSTIC FLOW CHART

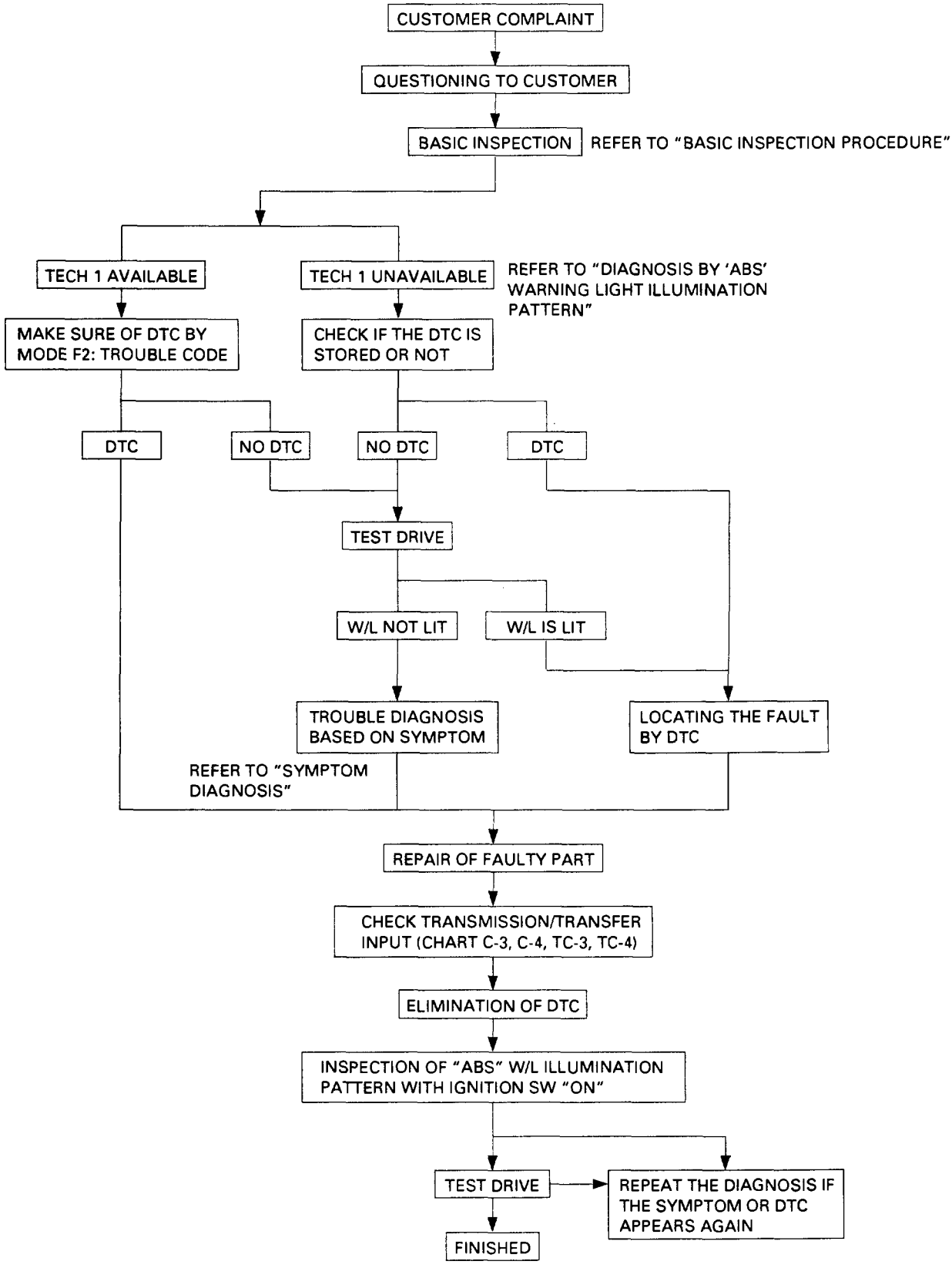

DTC = Diagnostic Trouble Code

BASIC INSPECTION PROCEDURE

1. Basic Inspection of Service Brake

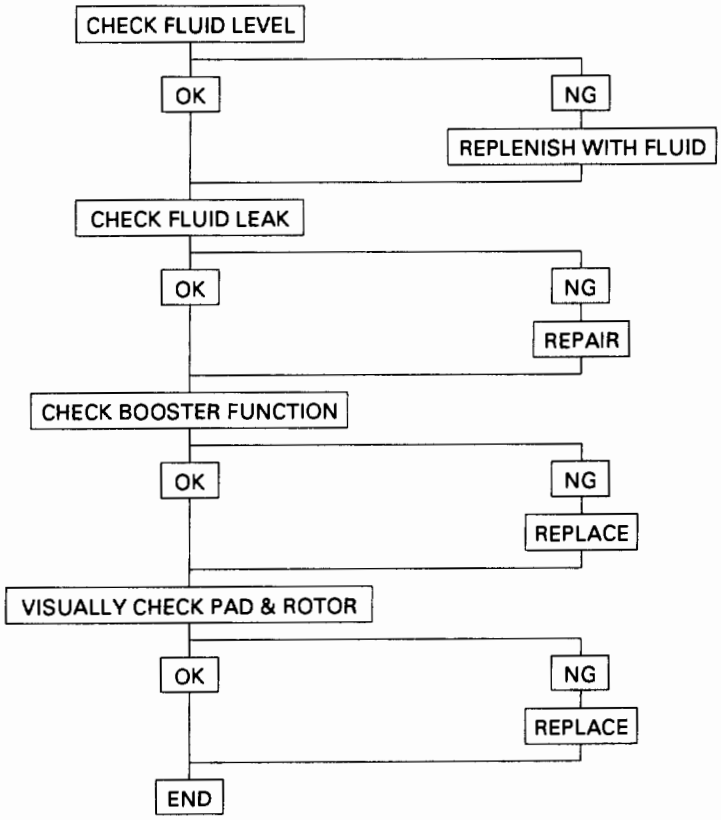

2. Inspection of Transfer Switch

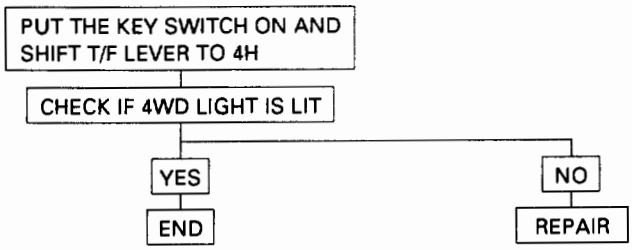

3. Ground Inspection

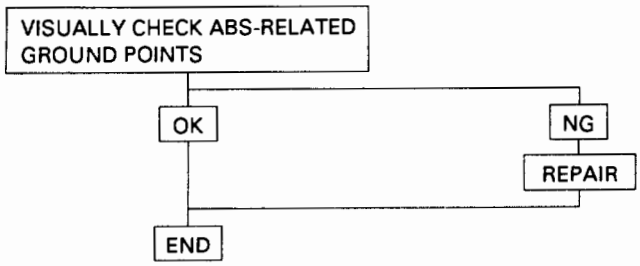

MEMO

TECH 1 TOOL

TECH 1 is an effective tool for the diagnosis of electrical fault of Antilock Brake System (ABS) and system check. Although you can completely diagnose the system without a TECH 1, using the tool is quicker. In the following procedures, the TECH 1 symbol shows where the TECH 1 is used. The ~~TECH 1~~ symbol means the tool is not used.

1. WHAT CAN BE DONE WITH TECH 1

ON TECH 1

- TECH 1 is a hand-held tester (Fig. 5A4-4). Connected to the Data Link Connector (DLC) installed in the vehicle, it communicates with ABS control unit (EBCM), thereby conducting various diagnoses and tests.

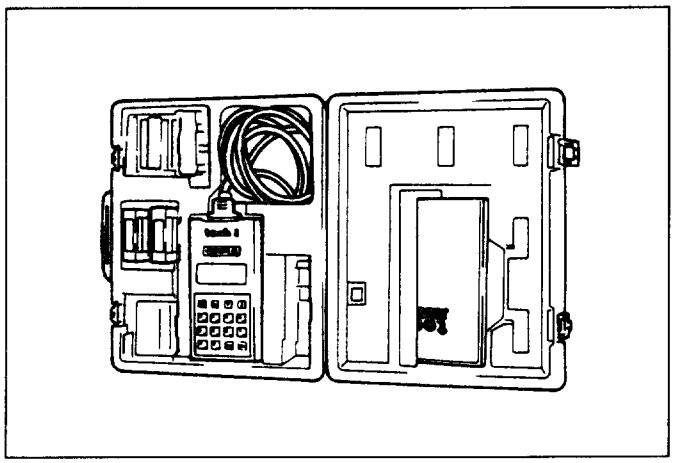

Fig. 5A4-4

- For this vehicle, use ISUZU '90-'94 TRANSMISSION/ABS cartridge.
- TECH 1 can check the following items:
  (1) Input values of EBCM sensors and switches, and working conditions of solenoid valves.
  (2) Diagnostic Trouble Code (DTC) No.
  (3) Incoming/outgoing data records.
  (4) The function of ABS through the operation of the motor and solenoid valves.
  (5) Clearing DTCs stored in EBCM.

How to connect TECH 1 with the vehicle (Fig. 5A4-5, 5A4-6)

(1) Insert the program cartridge (TK02500B-1) securely into the TECH 1 main unit (J-38770-1).
(2) Attach the adapter to the cable.
(3) Plug the ISUZU 3-pin adapter (TA-02279-B) into the adapter.
(4) Insert one end of the power plug into the TECH 1 and the other end into the cigarette lighter of the vehicle.
The power plug may as well be coupled directly to the battery using the battery cable adapter (J-38770-4).
(5) Turn the ignition key OFF, and connect TECH 1 with DLC (Orange colored).

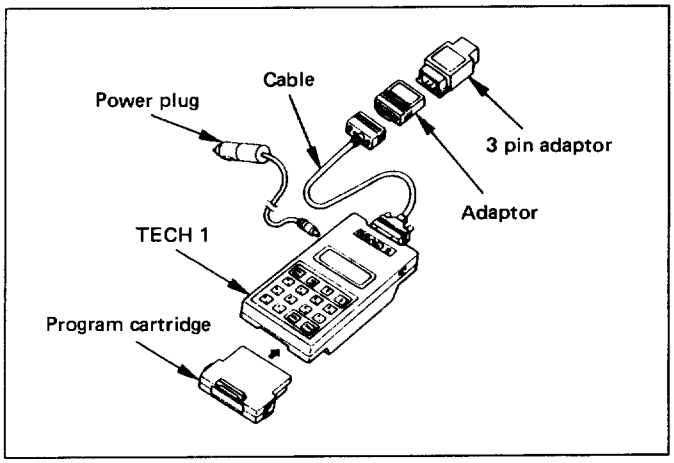

Fig. 5A4-5

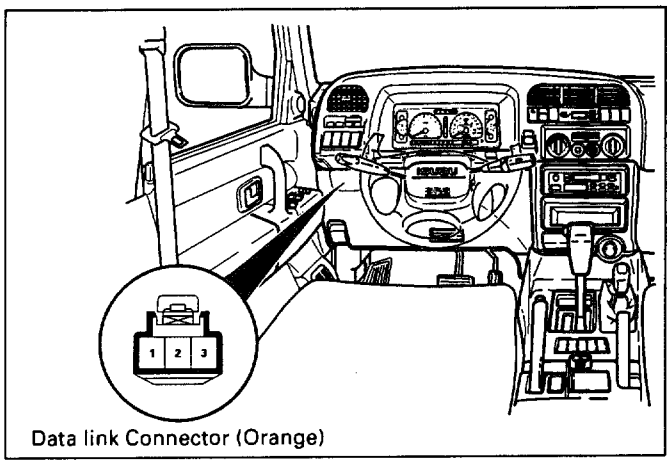

Fig. 5A4-6

2. HOW TO USE TECH 1

Operating procedure for TECH 1
After connecting with the vehicle, turn the ignition key ON and follow the flow chart.

CAUTION:
When mounting and removing "ISUZU '90 – '94 TRANSMISSION/ABS CARTRIDGE", make sure that no power is supplied to TECH 1. Press the detents on the outside of the cartridge to unlock it (Fig. 5A4-7).

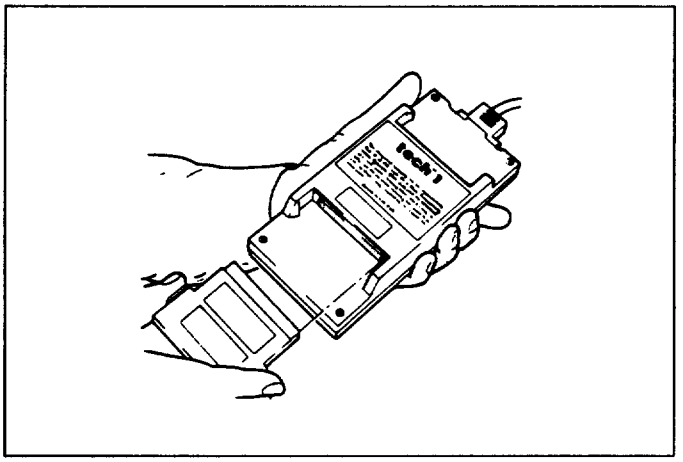

Fig. 5A4-7

Procedure to follow until ABS data is displayed:

```
ISUZU 90-94
TRANSMISSION/ABS

(YES)
```

Press the YES key.

```
ISUZU 90-94
TRANSMISSION/ABS
SELECT
MODEL YEAR:199?
```

Input the model year of the vehicle.
(Input 4.)

```
SELECT MODEL
UBS(G), UC, UX
MODEL YEAR:1994
(YES/NO)
```

Continue to press the NO key until UBS(G) is displayed. Then press the YES key.

```
STOP ENGINE
TURN ON IGNITION

(YES)
```

Stop the engine and turn the ignition key ON. Then press the YES key.

```
SELECT
ELECTRONIC DRIVE
TRAIN SYSTEM?
(YES/NO)
```

Do you check the drive train? As ABS system is not the drive train, press the NO key.

```
SELECT
ELECTRONIC
CHASSIS SYSTEM?
(YES/NO)
```

Do you check the chassis? As ABS is in the chassis system, press the YES key.

```
SELECT BY YES
*ABS-2E
```

To call data from control unit, press the YES key.

```
WATING
FOR DATA ON
ABS-2E
```

Now calling data out of control unit.

*note 1

```
COMPARE ISUZU
PART-NO
********** WITH
CHART 3    (YES/NO)
```

Identify the part No. of the control unit, and then press the YES key.

*note 2

```
ABS-2E
NO TROUBLE CODE
```

There is no trouble code in ABS system.
(In case of trouble, trouble code is displayed)

```
SELECT MODE
F0:DATA LIST
F1:NOT USED
F2:TROUBLE CODE
```

Select desired mode (see following explanation of modes). (Scroll up and down by key [↑], [↓] operation.)

```
SELECT MODE
F3:SNAP SHOT
F4:CLEAR CODE
F5:ACTUATOR TEST
```

```
SELECT MODE
F6:WHEEL SENSORS
```

*note 1

```
ABS-2E
NO DATA!
CHECK ALDL CONN.
SEE CHART 1
```

Chances are that the picture as shown in the box appears next to the 8th picture. It is displayed when there is no communication between TECH 1 and the EBCM. The following causes are considered:
CHART 1:
There are three different situations in which EBCM does not communicate with TECH 1:

1) Disconnection of Data Link Connector (ALDL) Harness
   Check to see "ABS" warning light is normally actuated with IGN being ON. If the light is not actuated, harness abnormality is suspected.

2) While driving (wheel speed values inputted)
   No problem in running the vehicle after communicating with TECH 1 while the vehicle stops.

*note 2
Chart 3 is to make sure that EBCM Part No. displayed by TECH-1 is identical with EBCM Part No. described in EBCM Unit.

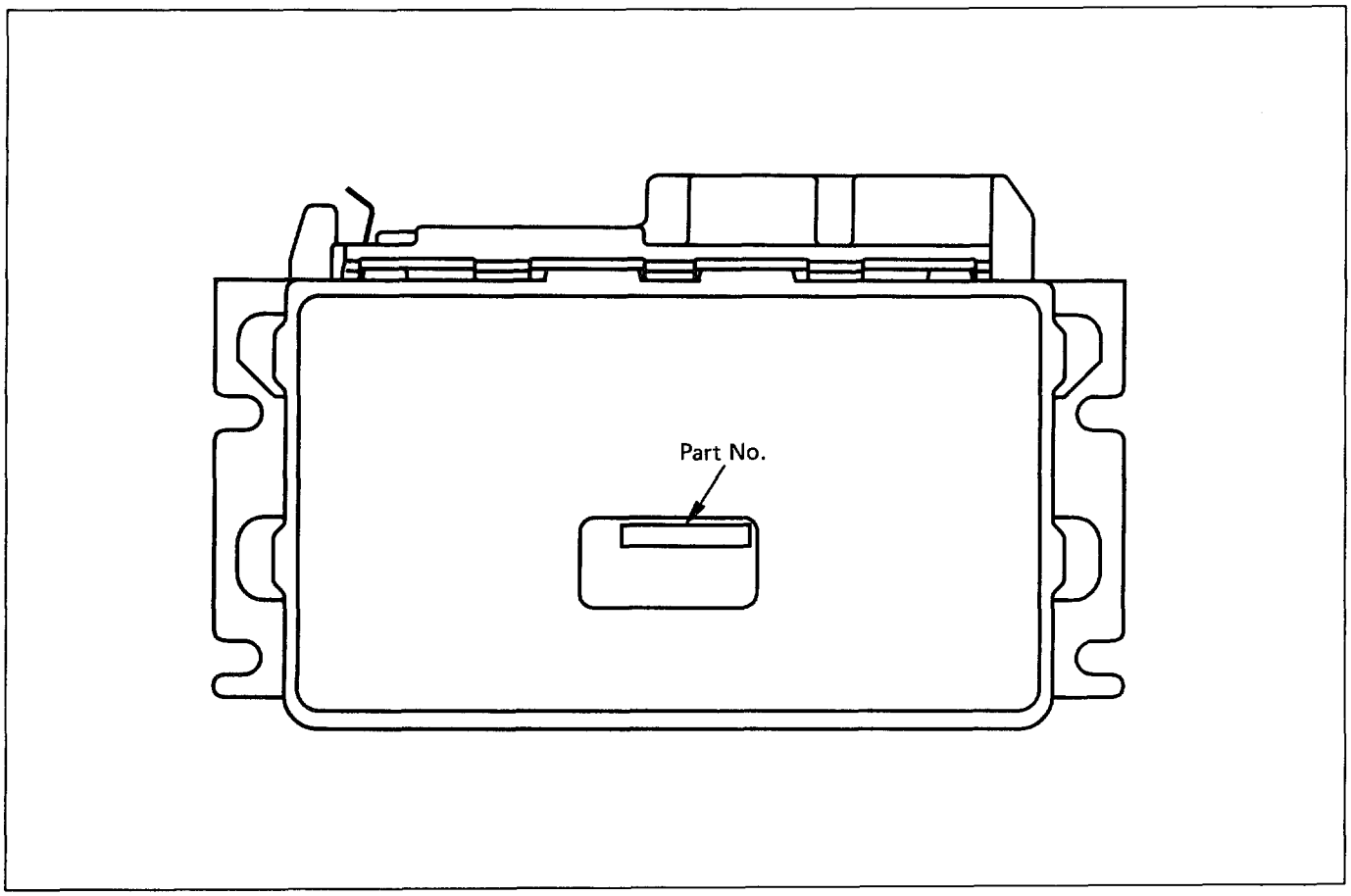

Fig. 5A4-8

3. EXPLANATION OF MODES

Mode F0: DATA LIST

F0: DATA LIST can display the conditions of sensors and switches as well as the ON/OFF operation of solenoid valves as commanded by the EBCM. In case of system abnormality, the trouble area can be roughly identified with the data displayed.

Mode F2: TROUBLE CODE

F2: TROUBLE CODE can display the past (history) Diagnostic Trouble Codes (DTCs) stored by the EBCM. When some trouble occurs and a TROUBLE CODE is set in this mode, the faulty area can promptly be located by checking the associated Trouble Code No.

Mode F3: SNAPSHOT

F3: SNAPSHOT can help locate the cause of trouble by storing and displaying the data from a specific period of vehicle operation.

Mode F4: CLEAR CODES

F4: CLEAR CODES erases the DTC stored by the control unit.

Mode F5: ACTUATOR TEST

F5: ACTUATOR TEST can make sure if the system-related motor, solenoid valves, and hydraulic circuit function normally. If there is still a problem in the operation of the system even after making electrical repairs, ACTUATOR TEST may uncover another problem. (note 1) This mode can be used under the following conditions:

- No trouble code is stored. (note 1)
- The vehicle is not in motion. (note 2)
- This mode should be selected before starting the engine.

note 1: As this mode forcibly operates actuators (solenoid valves, relays, motor, etc.), the control unit may be damaged if this test is conducted on damaged actuators. Therefore, be sure to repair all electrical faults and make sure no DTC is stored before using this mode.

note 2: If a vehicle speed (30 km/h (18.6 mph) or more) is detected during the ACTUATOR TEST, the test function will automatically stop.

Mode F6: WHEEL SENSORS

F6: WHEEL SENSORS can check to detect such speed sensor trouble as EBCM's self-diagnosing function fails to detect, including excessive gap in each speed sensor, momentary cut-off of sensor signal, etc.

MODE F0: DATA LIST (When connected (communication with EBCM) while warning light is off)

The data displayed by MODE F0: DATA LIST are as follows:

Display	Content	OK/NG Criteria for Data	
FL WHEEL SPEED	km/h (mph)	• Start the vehicle and make sure of linear change in each wheel speed. • Turn each wheel by hand and make sure that each speed data changes.	
FR WHEEL SPEED			
RL WHEEL SPEED			
RR WHEEL SPEED			
UVR MONITOR	Voltage	• About 5V with key ON	
VALVE RELAY	INACTIVE ACTIVE	• ACTIVE with key ON	
BRAKE SWITCH	Voltage	• About 5V with brake pedal • About 0V with brake pedal released	
	OPEN (Released) CLOSE (Pressed)	• CLOSE with brake pressed • OPEN with brake pedal released	
ABS WARNING LIGHT	ACTIVE INACTIVE	• To be ACTIVE usually	
WHL. SENSOR RES.	FAULT OKAY	• Normal, if OKAY	
FL SOL. VALVE	ACTIVE INACTIVE	• To be INACTIVE usually	
FR SOL. VALVE			
REAR SOL. VALVE			
P. MOTOR RELAY	ACTIVE INACTIVE	• To be INACTIVE usually	
OFF-ROAD – INPUT	Voltage	A/T	1L, R: less than 0.5V Other: 3 ±0.5V
		M/T	1, 2, R: more than 4.0V Other: 3 ± 0.5V
T/F SWITCH	OPEN CLOSE	• 4WD: CLOSE • 2WD: OPEN	

As for ABS vehicle speed unit, km/h and mph are displayed alternately through Key F7.

MODE F0: DATA LIST (When connected (communication with EBCM) while warning light is on)

The data displayed by MODE F0: DATA LIST are as follows:

Display	Content	OK/NG Criteria for Data	
FL WHEEL SPEED	km/h (mph)	• Start the vehicle and make sure of linear change in each wheel speed. • Turn each wheel by hand and make sure that each speed data changes.	
FR WHEEL SPEED			
RL WHEEL SPEED			
RR WHEEL SPEED			
UVR MONITOR	Voltage	• About 0V with key ON	
VALVE RELAY	INACTIVE ACTIVE	• INACTIVE with key ON	
BRAKE SWITCH	Voltage	• About 5V with brake pedal • About 0V with brake pedal released	
	OPEN (Released) CLOSE (Pressed)	• CLOSE with brake pressed • OPEN with brake pedal released	
ABS WARNING LIGHT	ACTIVE INACTIVE	• To be ACTIVE usually	
WHL. SENSOR RES.	FAULT OKAY	• Normal, if OKAY	
FL SOL. VALVE	ACTIVE INACTIVE	• To be ACTIVE usually	
FR SOL. VALVE			
REAR SOL. VALVE			
P. MOTOR RELAY	ACTIVE INACTIVE	• To be INACTIVE usually	
OFF-ROAD – INPUT	Voltage	A/T	1L, R: less than 0.5V Other: 3 ±0.5V
		M/T	1, 2, R: more than 4.0V Other: 3 ± 0.5V
T/F SWITCH	OPEN CLOSE	• 4WD: CLOSE • 2WD: OPEN	

As for ABS vehicle speed unit, km/h and mph are displayed alternately through Key F7.

MODE F2: TROUBLE CODE

The stored diagnostic trouble codes and their brief explanations are displayed in Mode: F2.

- NOT PRESENT .....Now normal, though faulty before.
- PRESENT .....Now faulty

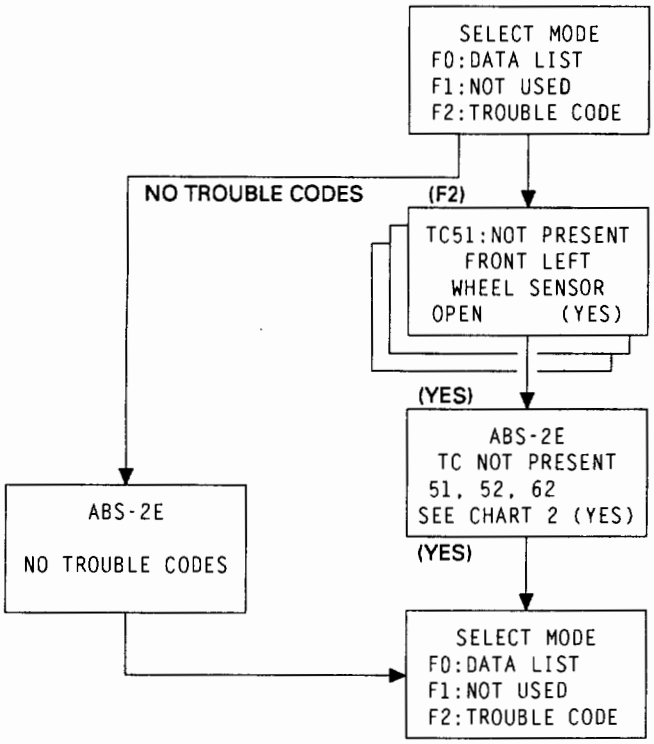

All the diagnostic trouble codes and their explanations stored by EBCM are displayed.

On completion of displaying all the diagnostic trouble codes and their explanations, all the diagnostic trouble codes only will be displayed again.

CHART 2 TROUBLE CODE

Code	Code	Chart No.
12	Start code	-
14	EBCM function	B-3
15	Power voltage drop	B-4
21	G-sensor	B-5
22	Brake light switch	B-6
23	Transmission input	B-7
32	Motor&motor relay	B-8
41	FL wheel valve	B-9
42	FR wheel valve	
44	Rear wheel valve	

Code	Code	Chart No.
45	Valve relay	B-10
51	FL wheel speed sensor	B-11
52	FR wheel speed sensor	
53	RL wheel speed sensor	
54	RR wheel speed sensor	
61	FL wheel speed sensor	B-12
62	FR wheel speed sensor	
63	RL wheel speed sensor	
64	RR wheel speed sensor	
65	Sensor signal input	B-13

MODE F3: SNAPSHOT

This mode is used to store the data displayed by MODE F0: DATA LIST during system operation. You can then review the information and compare it to specifications, to find any unusual conditions.
The trigger point must be manually input by the TECH 1 operator, by "F9" key.

```
SNAPSHOT OPTIONS
F0: NOT USED
F1: NOT USED
F2: MANUAL TRIG.
```

For further details please refer to the Operators Manual for TECH 1 "ISUZU 90-94 TRANSMISSION/ABS CARTRIDGE".

MODE F4: CLEAR CODE

This mode is used to erase the diagnostic trouble codes stored by the EBCM. On completion of repair, make sure the ABS system works normally and erase the diagnostic trouble code by this mode.

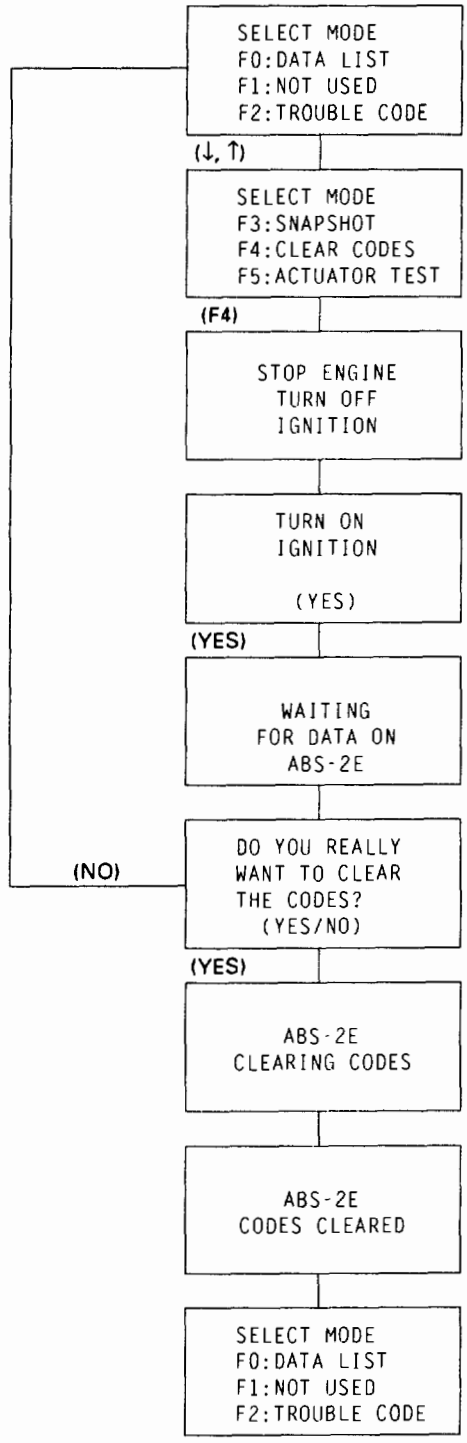

MODE F5: ACTUATOR TEST

This mode is used to exercise the ABS system actuators and make sure they operate normally. Prior to the test, pay attention to the cautions below. (When checking the solenoid valve system, be sure to jack up the vehicle.)

CAUTION:

- Before testing, be sure that the brakes work normally.
- Make sure that the battery is fully charged.
  Conduct the test by two persons (A TECH 1 operator and a vehicle checker).
- Be sure to start actuator test with the engine stopped.
- Before testing, make sure that electrical trouble, if any, has been completely repaired. Conducting tests of ABS actuator with electrical circuit problem remaining uncorrected could damage the control unit.

Selection Procedure:

```
   SELECT MODE
 F0:DATA LIST

      *

 F5:ACTUATOR TEST
```

F5

```
  SELECT ACTUATOR
* P. MOTOR RELAY     ----> Refer to ①
  FL SOL. VALVE      ----> Refer to ②
  FR SOL. VALVE      ----> Refer to ③
  REAR SOL. VALVE    ----> Refer to ④
  ABS W/L            ----> Refer to ⑤
```

NOTE:
F5; Actuator test procedure, the systems ① to ④ mentioned on the left can be checked four times continuously as each system is checked once.
When checking more than four times continuously, the fifth check must be started with a break of 10 minutes or more after the fourth to protect ABS pump motor.

Select the desired test by operating [↑]/[↓] keys and press [ENT] key.

①: Pump Motor Relay Test

The pump motor operates when current flows through the pump motor relay coil (Fig. 5A4-9).

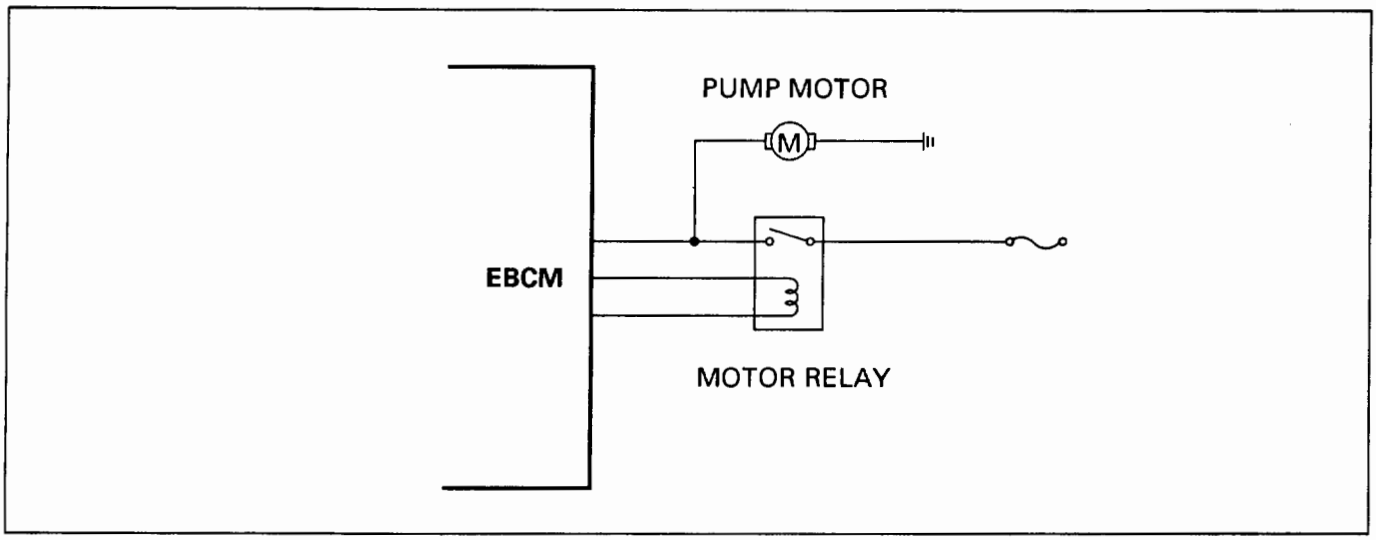

Fig. 5A4-9

Confirm the operation of the pump motor by its operating sound in the engine compartment.

TECH 1 Display	Key Operation
Display 1 P.MOTOR RELAY COMMANDED ON OKAY ? (YES/NO)	Is the pump motor working ? If so, press the YES key. If not, press the NO key. (The pump motor works for about 5 seconds.) * If the YES key is pressed, the menu display will be returned.
If the NO key was pressed above	
Display 2 P.MOTOR RELAY TEST FAILED (YES)	A test failure. The pump motor has mechanical trouble. * If the YES key is pressed, the menu display will be returned.
If the YES or NO key was not pressed within 5 sec. on Display 1 above	
Display 3 P.MOTOR RELAY OKAY ? (YES/NO)	Did the pump motor work normally? If so, press the YES key. If not, press the NO key. * YES key ⇨ Menu display * No key ⇨ Display 2

BRAKE SYSTEM TEST (②, ③, and ④)

When conducting these tests, jack up the vehicle. Be sure to confirm that the brakes work normally. Place transmission in Neutral.

CAUTION:
When testing the valves successively, leave time intervals of 10min. or more between tests so as to protect the valves.

The operating conditions of solenoid valve and resulting brake effect change during the test:

Test Steps

1) Confirmation of no brake effect (Can the wheel(s) be turned by hand when the brake pedal is released?).
2) Confirmation of brake effect (Can the wheel(s) be locked when the brake pedal is depressed?)
3) Brake oil pressure is reduced and held at that level.
4) Can the wheel(s) be turned by hand?
5) Solenoid valve is released so that brake pedal pressure reaches brake. Is the wheel(s) locked?

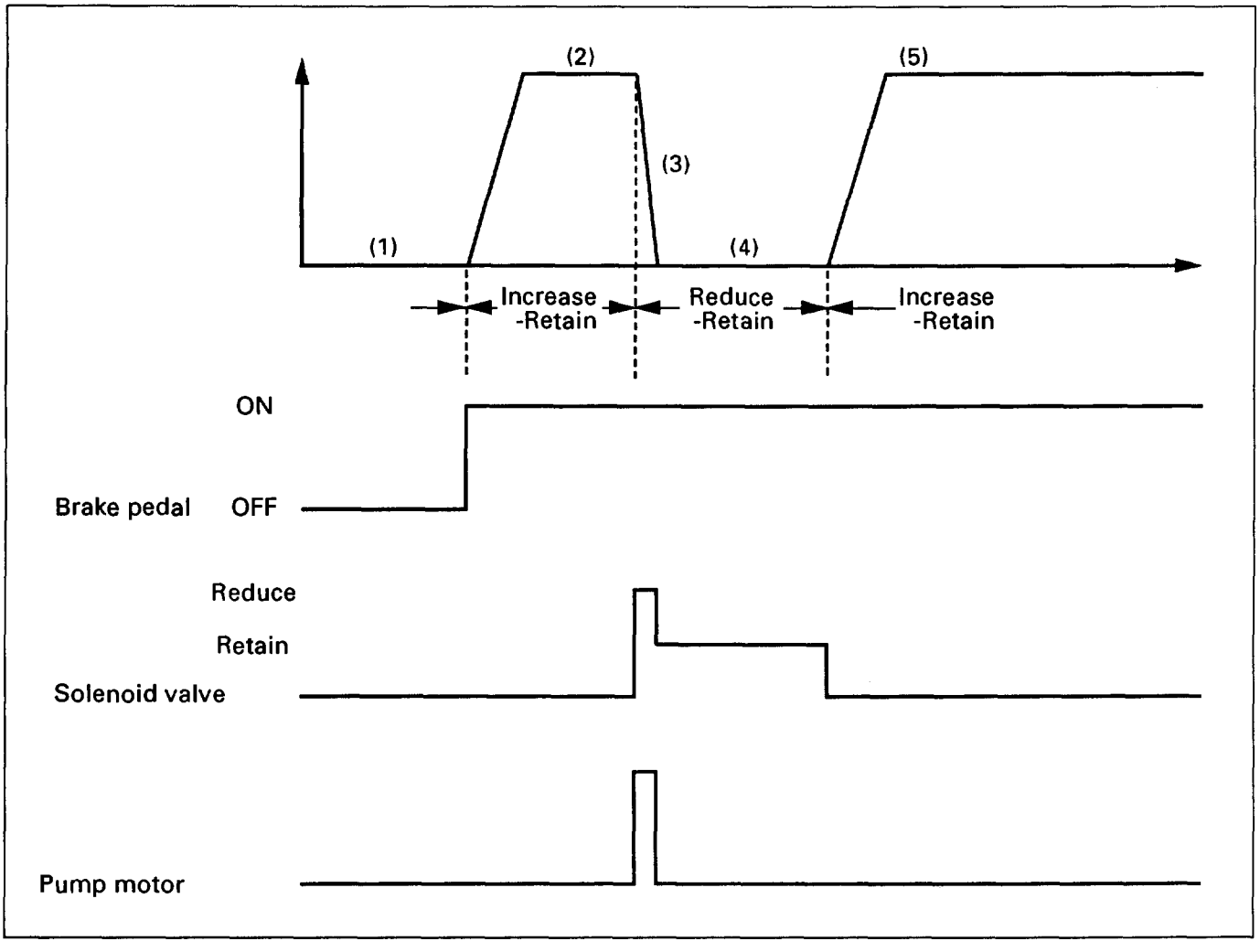

②: Front left wheel brake system test

TECH 1 Display	Key Operation	Brake pedal
BEFORE TEST RUN SEE CHECKING PROCEDURE (YES)	• Prior to the test, be sure to understand the entire procedure. • To go to the next step, press the YES key.	OFF ON
FL SOL. VALVE NORMAL FUNCTION WHEEL TURNABLE ? (YES/NO)	Can the wheel be turned by hand ? If so, press the YES key. Of not, press the NO key. (If the NO key is pressed, Diaplay 1 will be returned.)	
FL SOL. VALVE NORMAL FUNCTION DEPRESS AND HOLD BRAKE PEDAL !	Depress the brake pedal. Hold it down through the rest of this test.	
FL SOL. VALVE NORMAL FUNCTION WHEEL BLOCKED ? (YES/NO)	Is the wheel locked ? If so, press the YES key. If not, press the NO key. (If the NO key is pressed, Display 1 will be returned.)	
FL SOL. VALVE RELEASE FUNCTION P. MOTOR RELAY	The TECH 1 commands the EBCM to reduce hydraulic pressure and activate the pump motor. Display automatically goes to next display after a few seconds.	
FL SOL. VALVE RELEASE FUNCTION WHEEL TURNABLE ? (YES/NO)	Brake pressure has been reduced. Can the wheel be turned by hand ? If so, press the YES key. If not, press the NO key. (If the NO key is pressed, Display 2 will be returned.) **Note:** **To protect the valve, press the YES or NO key within 10 seconds.**	
FL SOL. VALVE RELEASE FUNCTION WHEEL BLOCKED ? (YES/NO) (Test is over.)	With the solenoid valve released, brake pedal pressure is allowed to reach the brake. Is the wheel locked ? If so, press the YES key. If not, press the NO key. (If the NO key is pressed, Display 2 will be returned.)	

TECH 1 Display	Key Operation
Display 1 FL SOL. VALVE NORMAL FUNCTION TEST FAILED ! (YES)	There is some problem in the normal hydraulic/mechanical brake system (not ABS problem). Check the brake piping system. If the YES is pressed, the Menu Display will be returned.
Display 2 FL SOL. VALVE RELEASE FUNCTION TEST FAILED ! (YES)	It is suspected that there is a mechanical abnormality in the related brake piping. Please check. Press YES key, and MENU will return.

③: Front right wheel brake system test

TECH 1 Display	Key Operation	Brake pedal
BEFORE TEST RUN SEE CHECKING PROCEDURE (YES)	• Prior to the test, be sure to understand the entire procedure. • To go to the next step, press the YES key.	OFF ON
FR SOL. VALVE NORMAL FUNCTION WHEEL TURNABLE ? (YES/NO)	Can the wheel be turned by hand ? If so, press the YES key. Of not, press the NO key. (If the NO key is pressed, Diaplay 1 will be returned.)	
FR SOL. VALVE NORMAL FUNCTION DEPRESS AND HOLD BRAKE PEDAL !	Depress the brake pedal. Hold it down through the rest of this test.	
FR SOL. VALVE NORMAL FUNCTION WHEEL BLOCKED ? (YES/NO)	Is the wheel locked ? If so, press the YES key. If not, press the NO key. (If the NO key is pressed, Display 1 will be returned.)	
FR SOL. VALVE RELEASE FUNCTION P. MOTOR RELAY	The TECH 1 commands the EBCM to reduce hydraulic pressure and activate the pump motor. Display automatically goes to next display after a few seconds.	
FR SOL. VALVE RELEASE FUNCTION WHEEL TURNABLE ? (YES/NO)	Brake pressure has been reduced. Can the wheel be turned by hand ? If so, press the YES key. If not, press the NO key. (If the NO key is pressed, Display 2 will be returned.) **Note:** **To protect the valve, press the YES or NO key within 10 seconds.**	
FR SOL. VALVE RELEASE FUNCTION WHEEL BLOCKED ? (YES/NO) (Test is over.)	With the solenoid valve released, brake pedal pressure is allowed to reach the brake. Is the wheel locked ? If so, press the YES key. If not, press the NO key. (If the NO key is pressed, Display 2 will be returned.)	

TECH 1 Display	Key Operation
Display 1 FR SOL. VALVE NORMAL FUNCTION TEST FAILED ! (YES)	There is some problem in the normal hydraulic/mechanical brake system (not ABS problem). Check the brake piping system. If the YES is pressed, the Menu Display will be returned.
Display 2 FR SOL. VALVE RELEASE FUNCTION TEST FAILED ! (YES)	It is suspected that there is a mechanical abnormality in the related brake piping. Please check. Press YES key, and MENU will return.

④: Rear wheel brake system test

TECH 1 Display	Key Operation	Brake pedal
BEFORE TEST RUN SEE CHECKING PROCEDURE (YES)	• Prior to the test, be sure to understand the entire procedure. • To go to the next step, press the YES key.	OFF ON
REAR SOL. VALVE NORMAL FUNCTION WHEEL TURNABLE ? (YES/NO)	Can the wheel be turned by hand ? If so, press the YES key. Of not, press the NO key. (If the NO key is pressed, Diaplay 1 will be returned.)	
REAR SOL. VALVE NORMAL FUNCTION DEPRESS AND HOLD BRAKE PEDAL !	Depress the brake pedal. Hold it down through the rest of this test.	
REAR SOL. VALVE NORMAL FUNCTION WHEEL BLOCKED ? (YES/NO)	Is the wheel locked ? If so, press the YES key. If not, press the NO key. (If the NO key is pressed, Display 1 will be returned.)	
REAR SOL. VALVE RELEASE FUNCTION P. MOTOR RELAY	The TECH 1 commands the EBCM to reduce hydraulic pressure and activate the pump motor. Display automatically goes to next display after a few seconds.	
REAR SOL. VALVE RELEASE FUNCTION WHEEL TURNABLE ? (YES/NO)	Brake pressure has been reduced. Can the wheel be turned by hand ? If so, press the YES key. If not, press the NO key. (If the NO key is pressed, Display 2 will be returned.) **Note:** **To protect the valve, press the YES or NO key within 10 seconds.**	
REAR SOL. VALVE RELEASE FUNCTION WHEEL BLOCKED ? (YES/NO) (Test is over.)	With the solenoid valve released, brake pedal pressure is allowed to reach the brake. Is the wheel locked ? If so, press the YES key. If not, press the NO key. (If the NO key is pressed, Display 2 will be returned.)	

TECH 1 Display	Key Operation
Display 1 REAR SOL. VALVE NORMAL FUNCTION TEST FAILED ! (YES)	**There is some problem in the normal hydraulic/mechanical brake system (not ABS problem).** **Check the brake piping system.** **If the YES is pressed, the Menu Display will be returned.**
Display 2 REAR SOL. VALVE RELEASE FUNCTION TEST FAILED ! (YES)	**It is suspected that there is a mechanical abnormality in the related brake piping. Please check.** **Press YES key, and MENU will return.**

⑤: ABS warning light test

In this test, light is actuated to make sure of its function (Fig. 5A4-10).

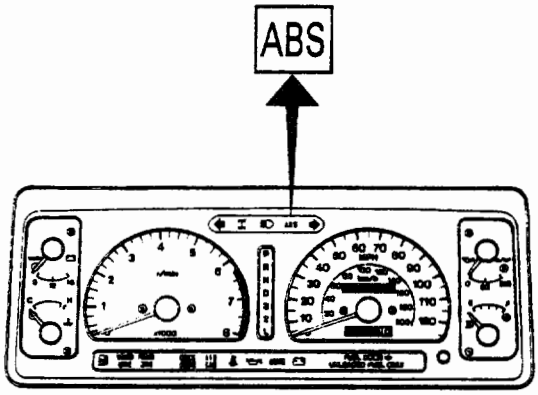

Fig. 5A4-10

TECH 1 Display	Key Operation
ABS W/L BLINK OKAY ? (YES/NO)	* Is the light blinking ? If so, press the YES key. If not, press the NO key.
If fault exists and the NO key is pressed	
TEST FAILED (YES)	A test failure. Check ABS W/L wiring and fuses.

MODE F6: WHEEL SENSORS

When conducting the wheel sensor test, note the following:

1) Accelerate vehicle only slightly above 20 km/h (12 mph).
2) When this speed is attained, put transmission into neutral and allow vehicle to coast to a halt. (Parking brake may be engaged slightly.)
3) When vehicle is at a standstill, actuate either foot brake or parking brake.

When the wheel speed sensor test is being performed, the output or speed value of all four sensors is monitored by TECH 1. When the output of wheel sensors becomes too low to convert into speed value, the last known vehicle speed is displayed and the values are fixed. If wheel sensors are normal, it is at the vehicle speed of 5 km/h (3 mph) or less that their output is lost. Therefore, if all the fixed speed values are less than 5 km/h (3 mph), the wheel sensors are normal. If one or more of the four speed values is more than 5 km/h (3 mph), it suggests that the following abnormalities have occurred to the sensor(s):

1. Excess gap between the sensor and sensor rotor.
2. Broken or damaged sensor rotor teeth.
3. Momentary open in sensor harness.

TECH 1 Display	Key Operation
INSTRUCTION: DRIVE VE-HICLE AT 20km/h AND THEN (YES)	This explains MODE F6. Drive vehicle at 20 km/h (12 mph). Press the YES key for the next display.
RELEASE GAS PEDAL, DISENGAGE TRANSMISSION AND (YES)	Release accelerator pedal while driving, and put transmission into neutral. Press the YES key for the next display.
AS SOON AS THE VEHICLE HAS STOPPED APPLY BRAKES (YES)	After coasting to a halt with transmission in neutral, apply brakes immediately. Press the YES key for the next display. This completes instructions as to F6. The test will be started with the next display.
BEGIN TEST DRIVE VE-HICLE AT 20km/h ** ** ** **	Let's begin the test. Carry out the test according to the display. ** indicates the wheel speed value into which the output of each sensor has been converted.
DECREASE VEHICLE SPEED TO 0km/h ** ** ** **	Decelerate vehicle by coasting until it comes to a halt. (Parking brake may be slightly engaged.)
MEASURED WHEEL SPEED THRESHOLDS ** ** ** ** SEE CHART 6 (YES)	Make sure that there is no significant difference among the wheel speed values. The data indicate 3~5 km/h (2~3 mph). See CHART 6 ➡ Refer to CHART C-2 for check procedure.

To obtain mph in MODE: F6, display mph in MODE: F0 once and thereafter, change to MODE:F6.

PIN-OUT CHECKS

- Connect Pinout Box J-35592 to 35-Pin Electronic Brake Control Module connector as described in this section.
- Perform checks with high impedance digital multimeter J-39200 or equivalent.

No.	Circuit to be Tested	Ignition Switch Position	Multimeter Scale/Range	Measure between Pin Number	Nominal Value	Note
1	Ignition enable	OFF ON	20DCV 20DCV	1 (+), 10 (–) 1 (+), 10 (–)	0V to 0.1V 11.5V to 14.5V	
2	Valve relay	OFF OFF	Ω 200Ω	32, 10 17, 27	continuity: OK no continuity: NG 75 to 120Ω	
3	Motor relay	OFF OFF	Ω 200Ω	14, 10 17, 28	continuity: OK no continuity: NG 70 to 90Ω	
4	Diode	ON	Ω	29 (+), 32 (–) 29 (–), 32 (+)	Replace (+) and (–) with each other and check to see a variation of continuity/ no continuity.	
5	Stop light switch	OFF	20DCV	25, 10	11.5V to 14.5V	Press brake pedal
6	Ground connection	OFF	200Ω	32, 10 32, 20 32, 34	Less than 2Ω	Valve relay
7	FL solenoid valve	OFF	200Ω	2, 32	0.6 to 1.8Ω	
8	FR solenoid valve	OFF	200Ω	35, 32	0.6 to 1.8Ω	
9	Rr solenoid valve	OFF	200Ω	18, 32	0.6 to 1.8Ω	
10	FL speed sensor	OFF OFF OFF	2kΩ 200kΩ 200mACV	22, 4 22, 10 22, 4	0.8k to 1.3kΩ more than 100kΩ more than 200mV	Internal Resistance Insulation Resistance Turn wheel at 1RPS
11	FR speed sensor	OFF OFF OFF	2kΩ 200kΩ 200mACV	23, 21 23, 10 23, 21	0.8k to 1.3kΩ more than 100kΩ more than 200mV	Internal Resistance Insulation Resistance Turn wheel at 1RPS
12	RL speed sensor	OFF OFF OFF	2kΩ 200kΩ 200mACV	8, 9 8, 10 8, 9	0.8k to 1.3kΩ more than 100kΩ more than 200mV	Internal Resistance Insulation Resistance Turn wheel at 1RPS
13	RR speed sensor	OFF OFF OFF	2kΩ 200kΩ 200mACV	24, 26 24, 10 24, 26	0.8k to 1.3kΩ more than 100kΩ more than 200mV	Internal Resistance Insulation Resistance Turn wheel at 1RPS
14	G-sensor	OFF	200Ω	13, 1	less than 100Ω	
15	Transmission-Input	ON	Ω	16, 20	continuity (L, R shift lever position) no continuity (other shift position)	A/T
			20DCV	16 (+), 20 (–)	11.5V to 14.5V (M/T – 1, 2, R) 0V (other shift position)	
16	Transfer-Input	ON	20DCV	15 (+), 20 (–)	11.5 ~ 14.5V (2H) 0V (4H, 4L)	

CIRCUIT DIAGRAM

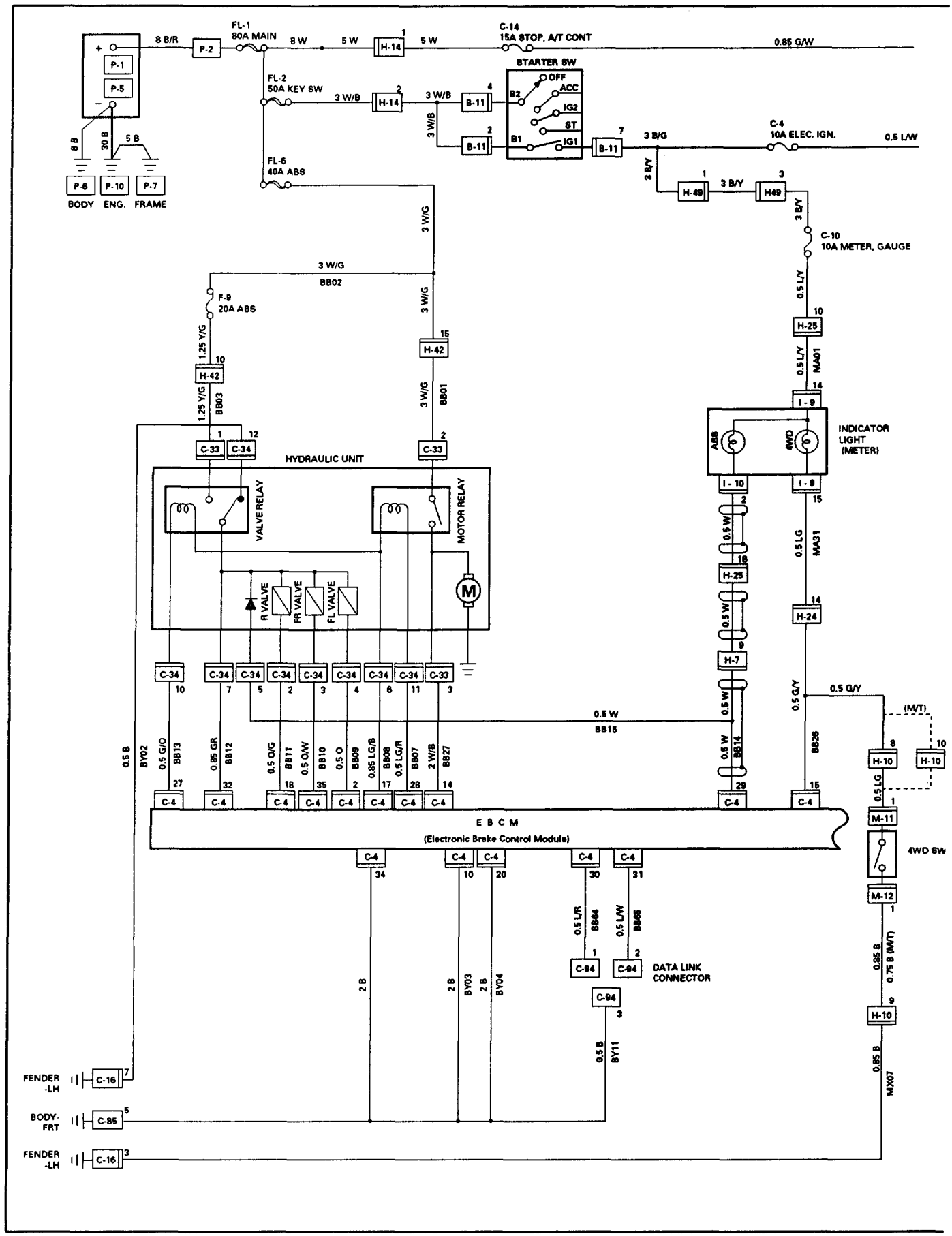

Fig. 5A4-11

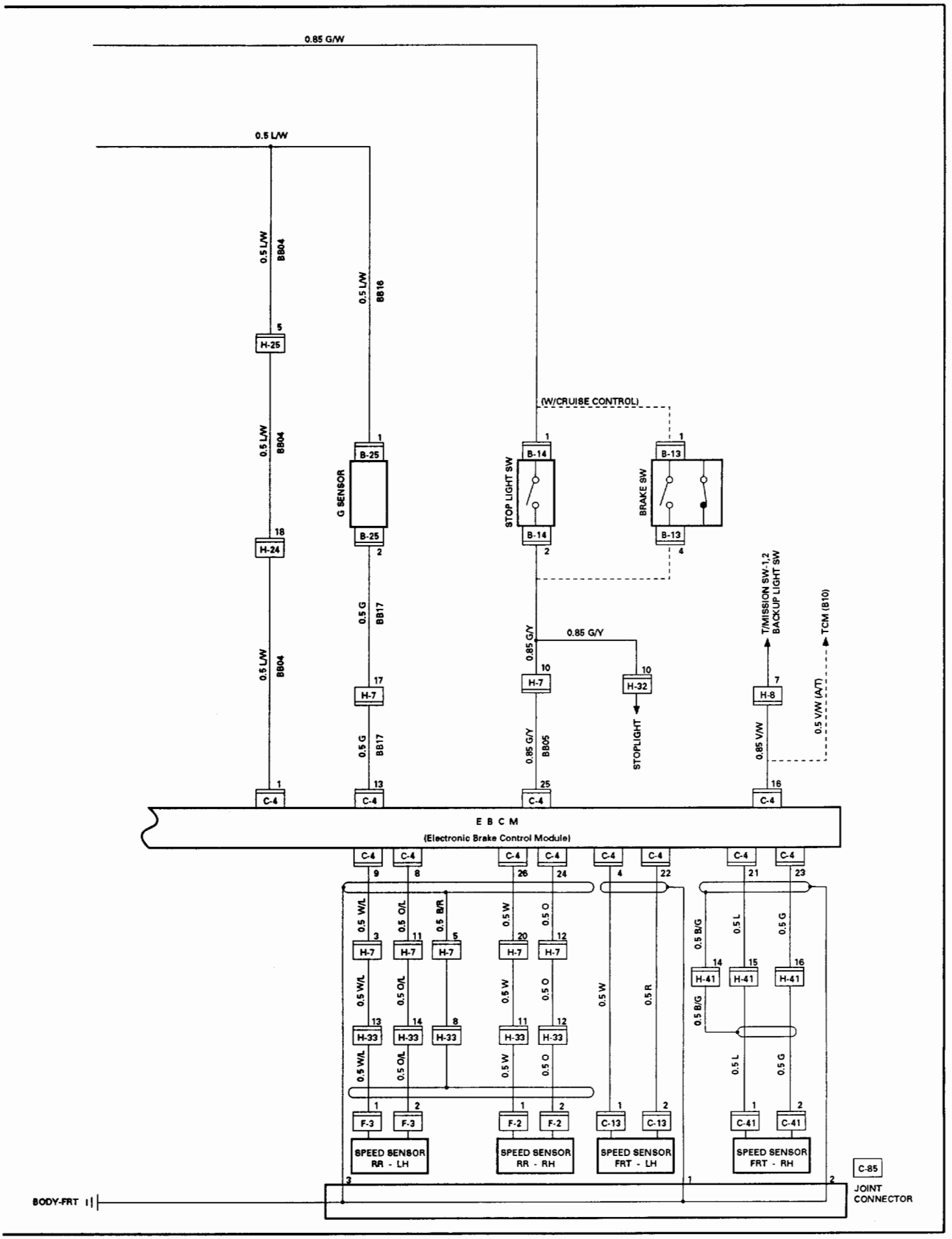
0.85 G/W
0.5 L/W
0.5 L/W BB04
0.5 L/W BB16
H-25
H-24
(W/CRUISE CONTROL)
B-25
G SENSOR
B-14
STOP LIGHT SW
B-13
BRAKE SW
0.5 G BB17
0.85 G/Y
0.85 G/Y
H-7
H-32
STOPLIGHT
T/MISSION SW-1,2
BACKUP LIGHT SW
TCM (B10)
H-8
0.85 V/W
0.5 V/W (A/T)
0.85 G/Y BB05
C-4
E B C M
(Electronic Brake Control Module)
0.5 W/L
0.5 O/L
0.5 B/R
0.5 W
0.5 O
0.5 R
0.5 B/G
0.5 L
0.5 G
H-33
H-41
F-3
F-2
C-13
C-41
SPEED SENSOR RR - LH
SPEED SENSOR RR - RH
SPEED SENSOR FRT - LH
SPEED SENSOR FRT - RH
C-85
JOINT CONNECTOR
BODY-FRT

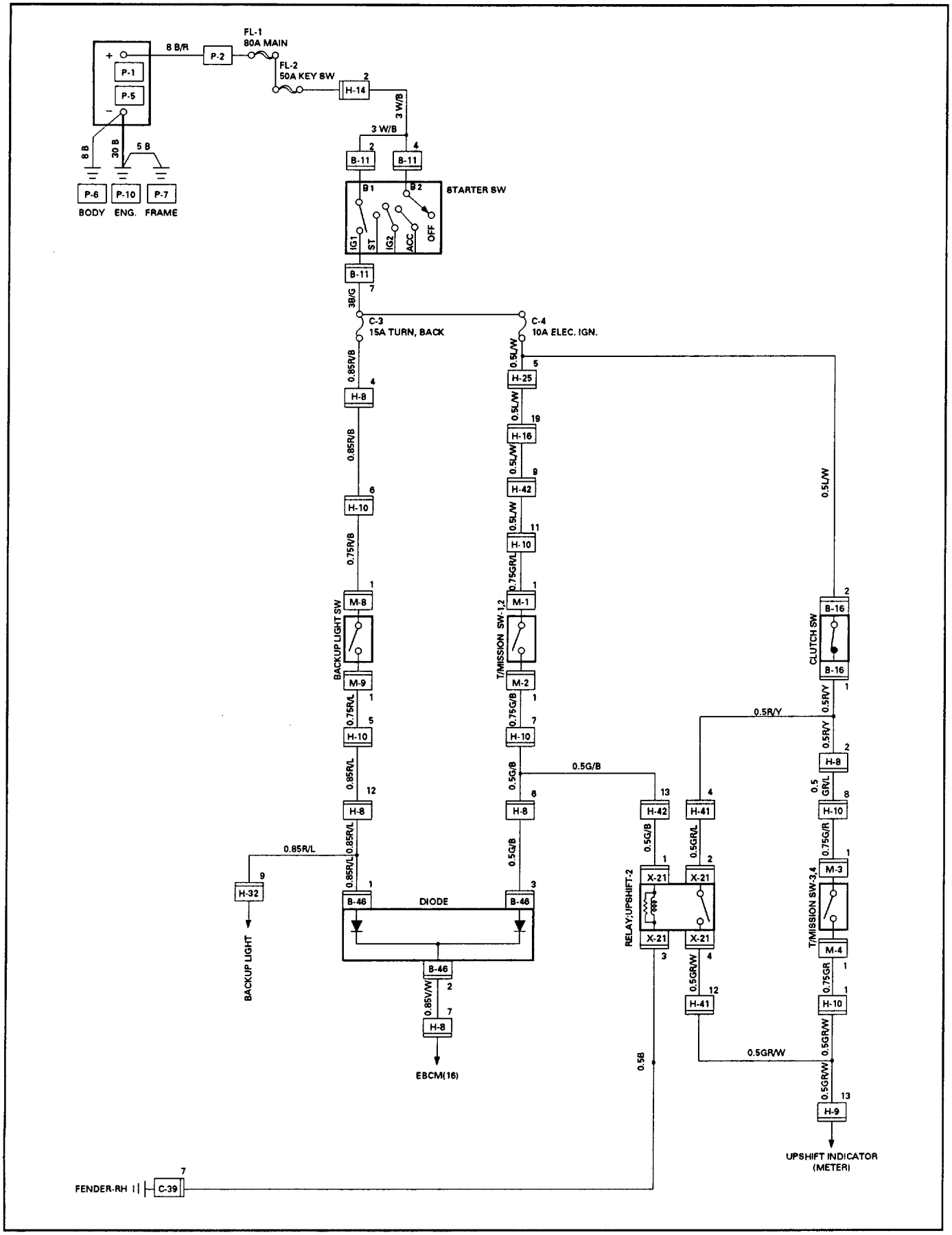
FL-1
80A MAIN
FL-2
50A KEY SW
8 B/R
P-1
P-5
P-2
H-14
3 W/B
8 B
30 B
5 B
P-6
P-10
P-7
BODY
ENG.
FRAME
B-11
STARTER SW
B1
B2
IG1
ST
IG2
ACC
OFF
3B/G
C-3
15A TURN, BACK
C-4
10A ELEC. IGN.
0.85R/B
0.5L/W
H-8
H-25
H-16
H-42
H-10
0.75R/B
0.75GR/L
M-8
M-1
BACKUP LIGHT SW
T/MISSION SW-1,2
M-9
M-2
0.75R/L
0.75G/B
0.85R/L
0.5G/B
0.85R/L
H-32
BACKUP LIGHT
B-46
DIODE
0.85V/W
EBCM(16)
H-42
H-41
0.5G/B
0.5GR/L
X-21
RELAY;UPSHIFT-2
0.5GR/W
0.5B
0.5R/Y
B-16
CLUTCH SW
0.5 GR/L
0.75G/R
M-3
T/MISSION SW-3,4
M-4
0.75GR
0.5GR/W
H-9
UPSHIFT INDICATOR
(METER)
FENDER-RH
C-39

Fig. 5A4-12

PART LOCATION

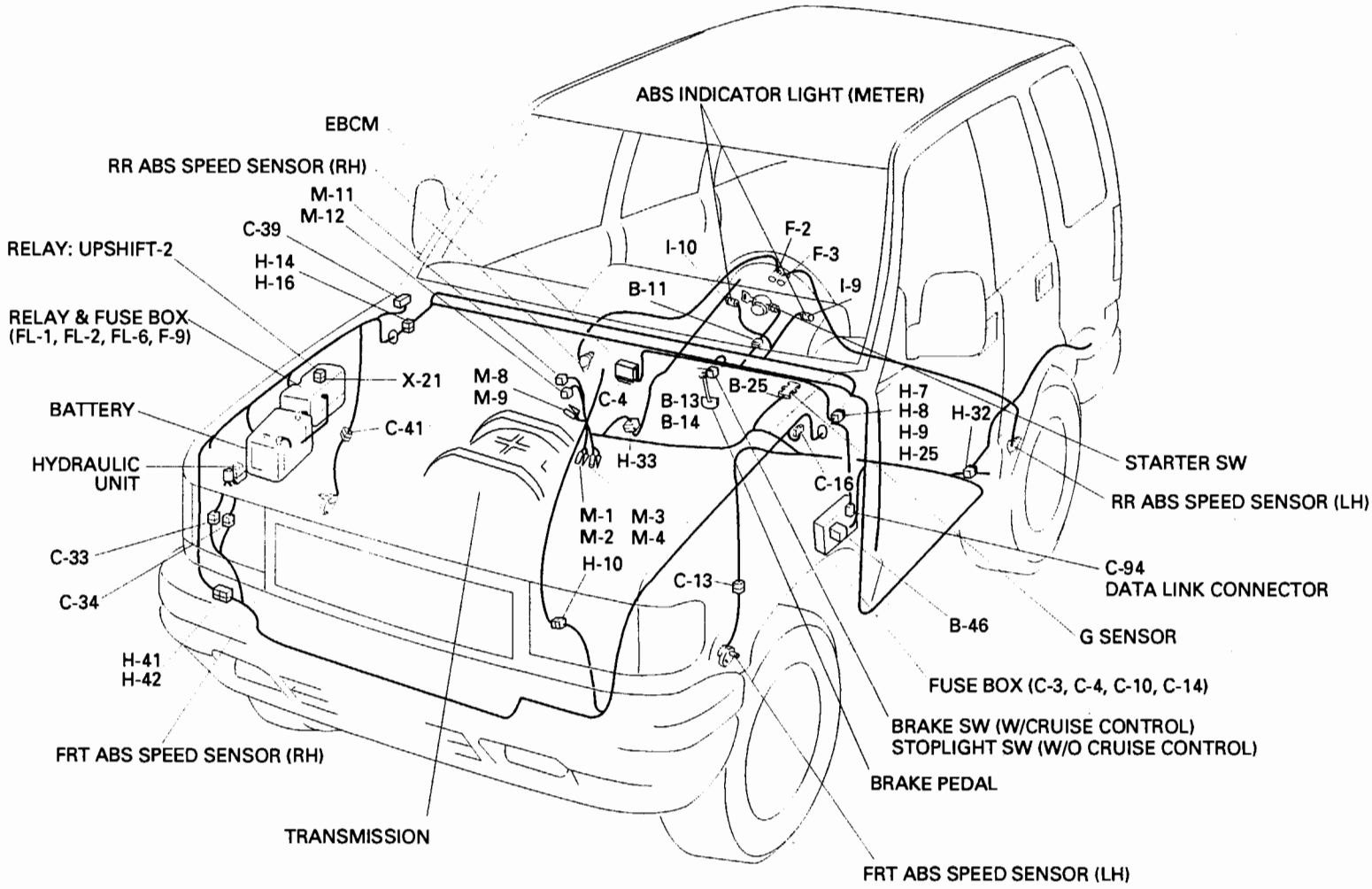

Fig. 5A4-13

SYMPTOM DIAGNOSIS

The symptoms that cannot be indicated by warning light can be divided in the following five categories:
1) ABS works frequently but vehicle does not decelerate.
2) Uneven braking occurs while ABS works.
3) The wheels lock during braking.
4) Brake pedal feel is abnormal.
5) Braking sound (from hydraulic unit) is heard while not braking.

These are all attributable to problems which cannot be detected by EBCM's self-diagnosis. Use the customer complaint and a test to determine which symptom is present. Then follow the appropriate flow chart listed below.

No.	Symptom	Diagnostic Flow Charts	
		Without TECH 1	With TECH 1
1	ABS works frequently but vehicles does not decelerate.	Chart A-1	Chart TA-1
2	Uneven braking occurs while ABS works.	Chart A-2	Chart TA-2
3	The wheels are locked.	Chart A-3	Chart TA-3
4	Brake pedal feel is abnormal.	Chart A-4	—
5	Braking sound (from hydraulic unit) is heard while not braking.	Chart A-5	Chart TA-5

TECH 1

CHART A-1

1) ABS WORKS FREQUENTLY BUT VEHICLE DOES NOT DECELERATE

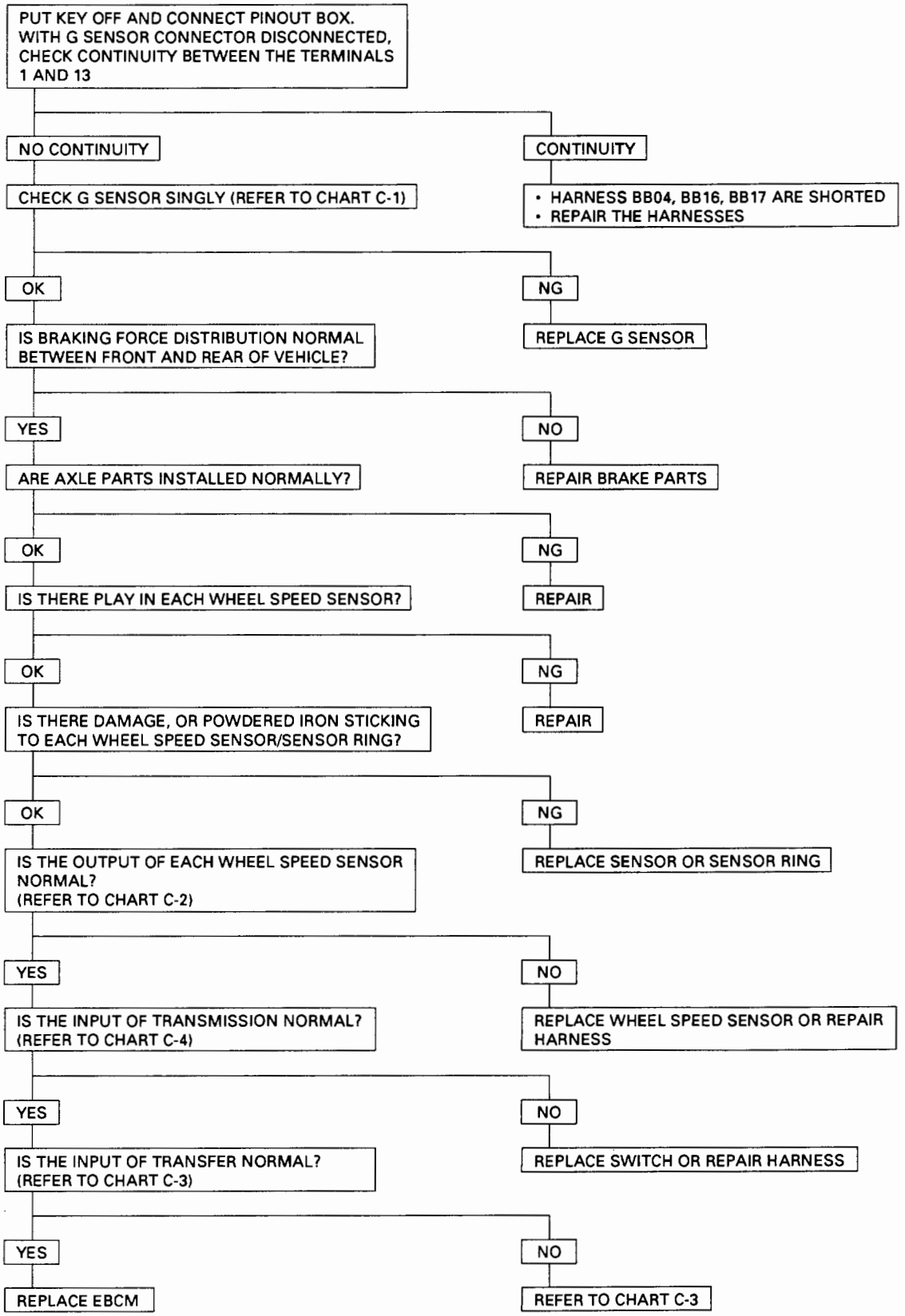

CHART TA-1

TECH 1

1) ABS WORKS FREQUENTLY BUT VEHICLE DOES NOT DECELERATE

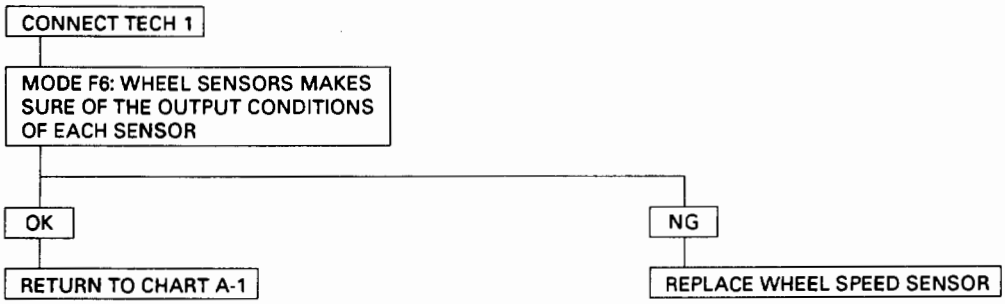

TECH 1

CHART A-2
2) UNEVEN BRAKING OCCURS WHILE ABS WORKS

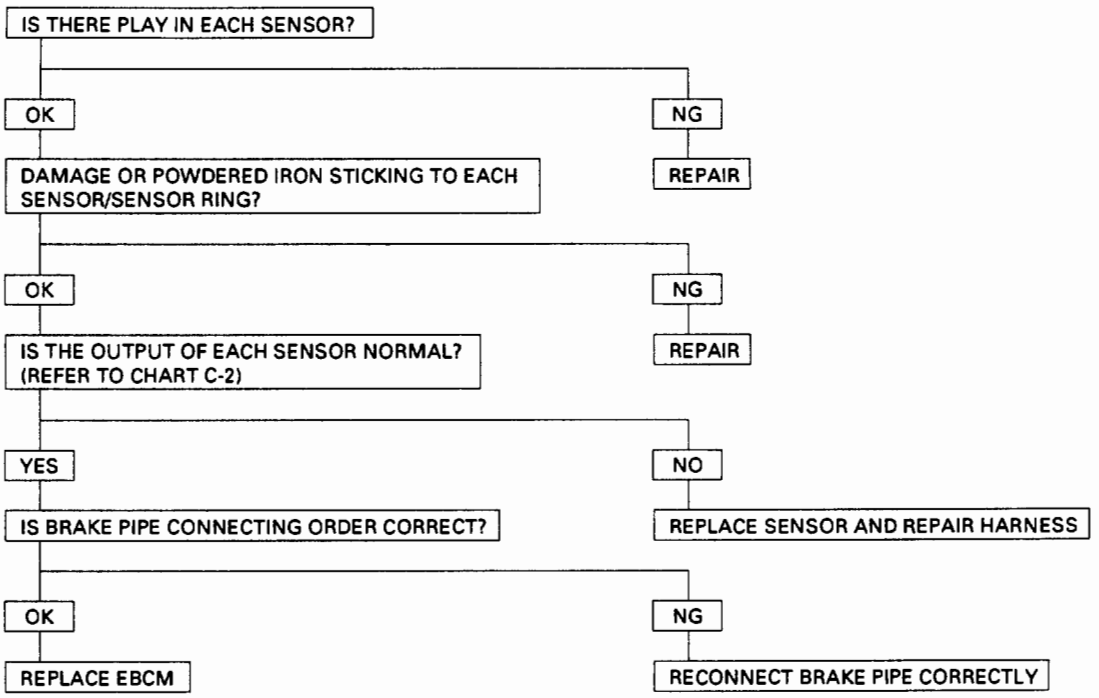

CHART TA-2

TECH 1

2) UNEVEN BRAKING OCCURS WHILE ABS WORKS

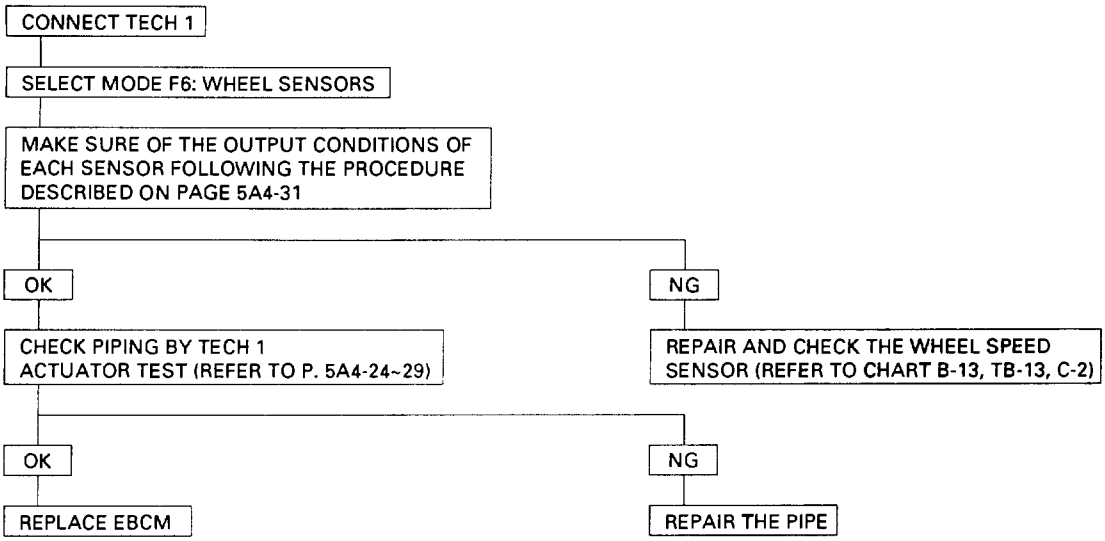

CHART A-3, TA-3

~~TECH 1~~ TECH 1

3) THE WHEELS ARE LOCKED

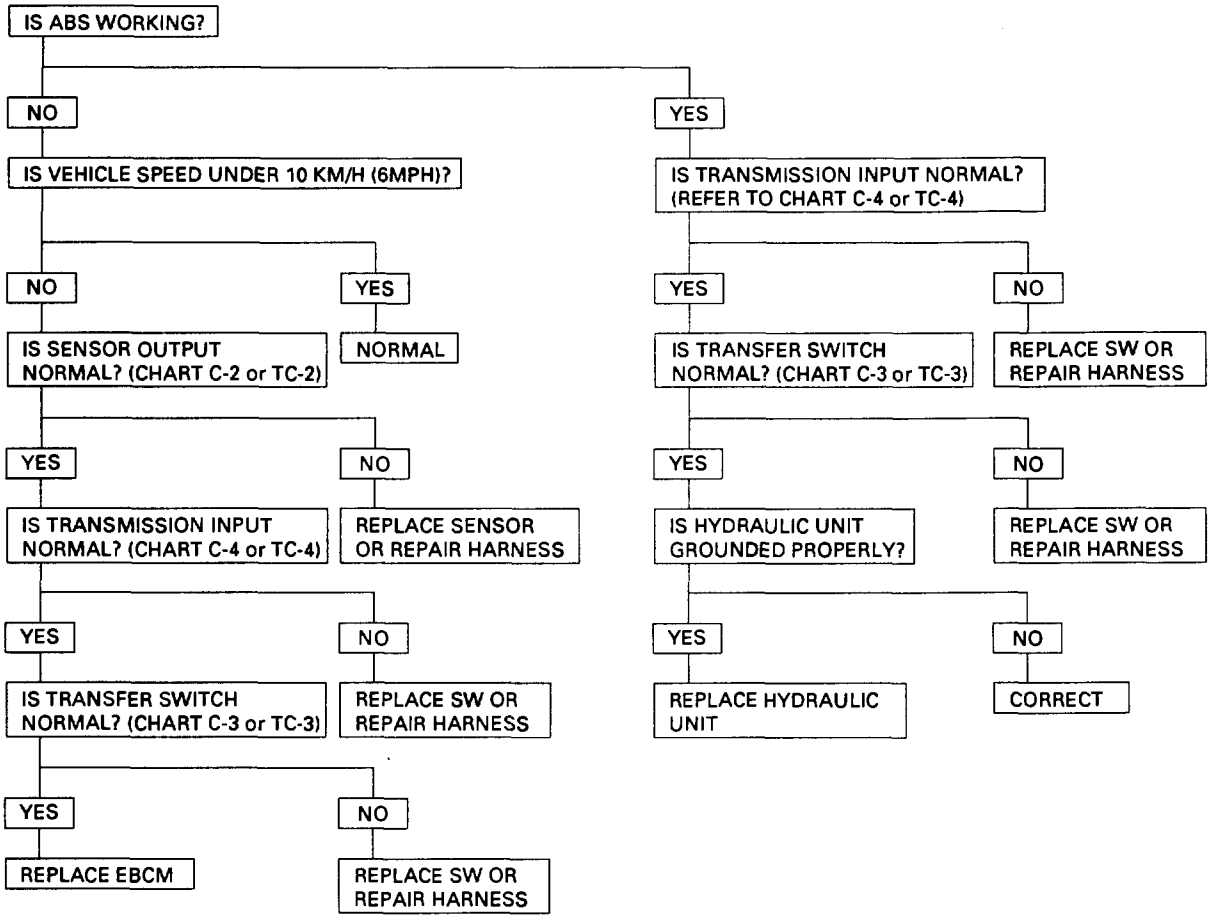

TECH 1

CHART A-4
4) BRAKE PEDAL FEEL IS ABNORMAL

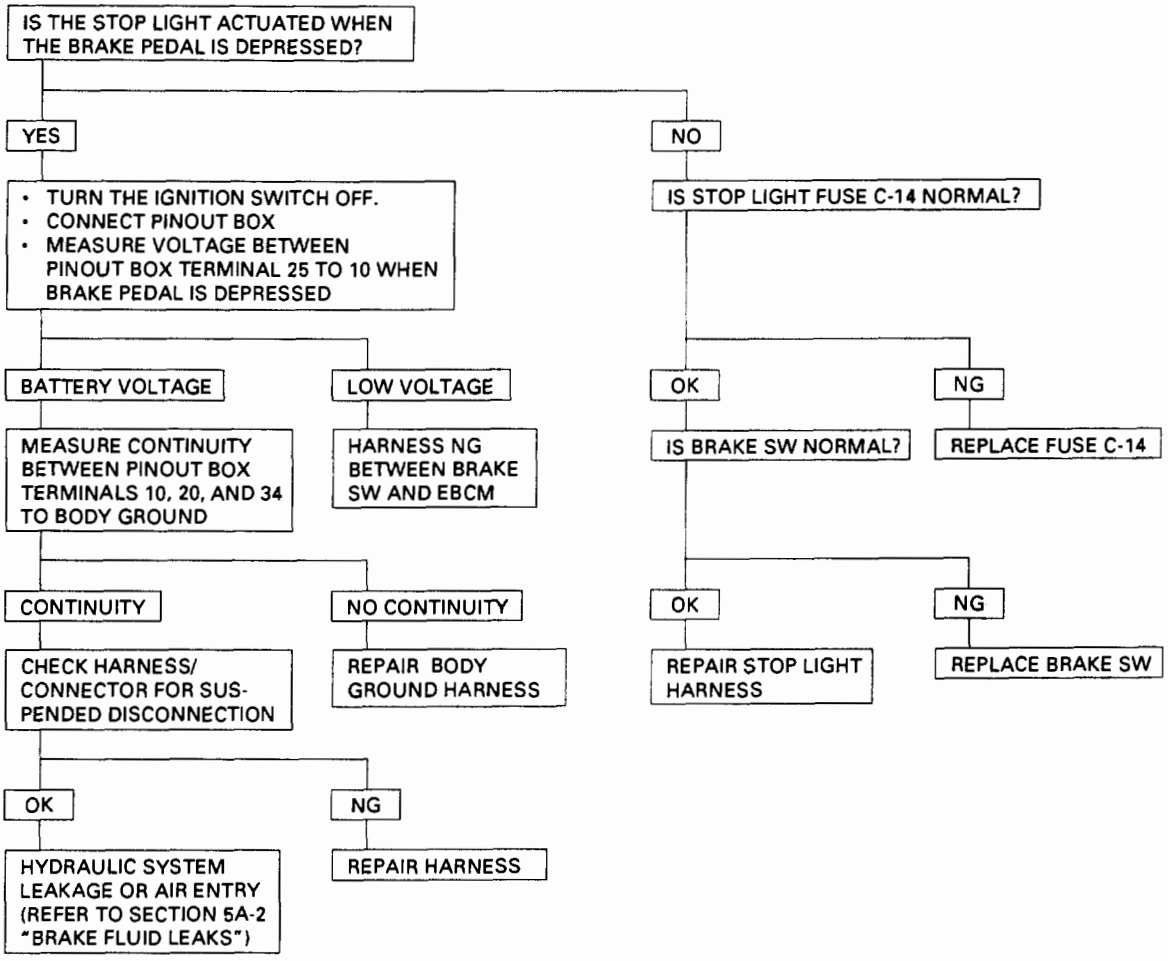

CHART A-5, TA-5

~~TECH 1~~ TECH 1

5) BRAKING SOUND (FROM HYDRAULIC UNIT) IS HEARD WHILE NOT BRAKING

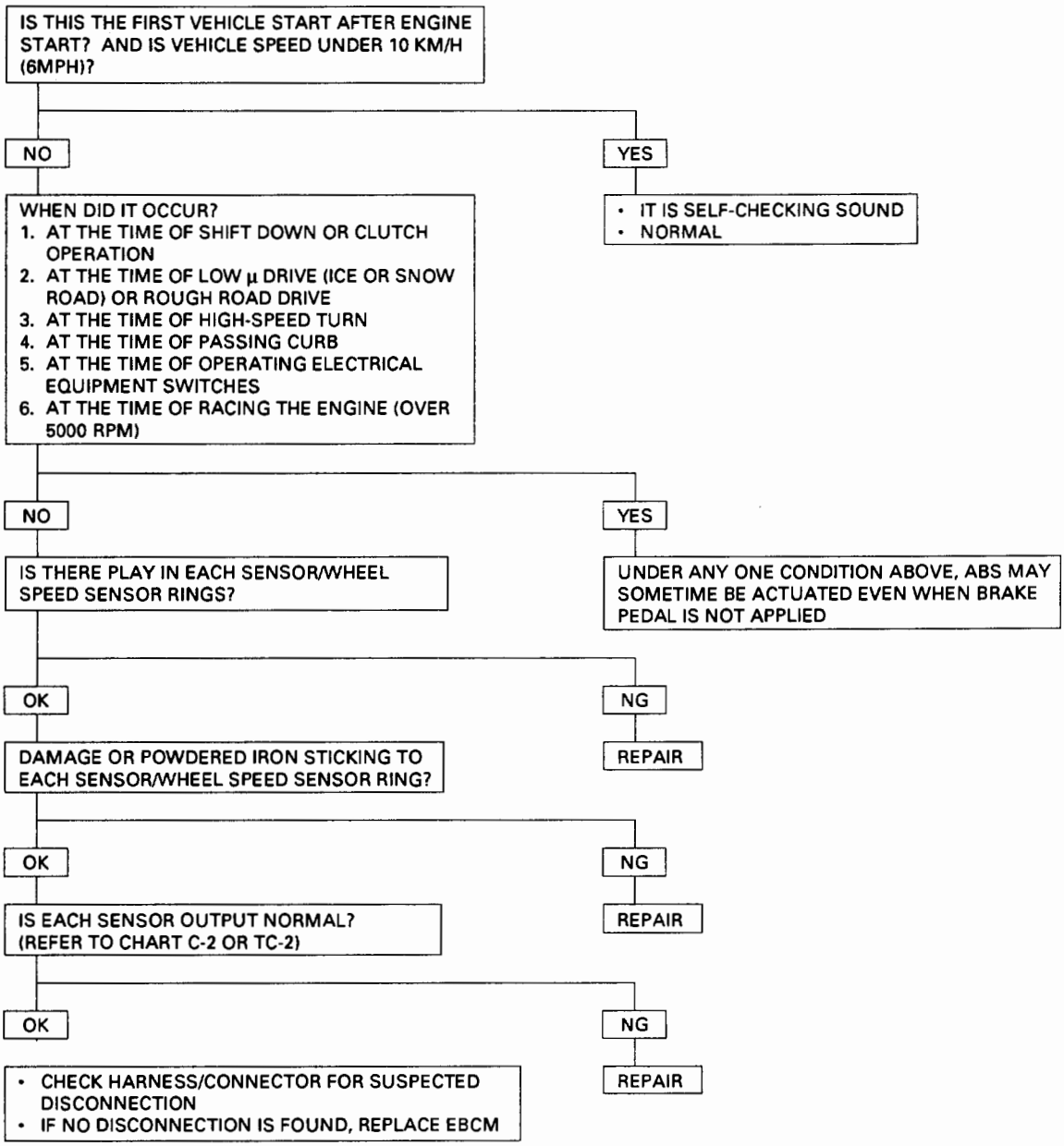

μ = Friction Unit

DIAGNOSIS BY "ABS" WARNING LIGHT ILLUMINATION PATTERN

In the event that there is abnormality in the "ABS" warning light illumination pattern while the key is in the ON position or if the warning light is actuated during driving, trouble should be diagnosed on a illumination pattern basis as follows:

No.	Condition	"ABS" Warning Light Illumination Pattern	Diagnostic Chart
1	Warning light is actuated normally	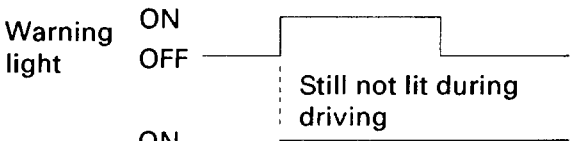	Normal
2	Warning light is not lit	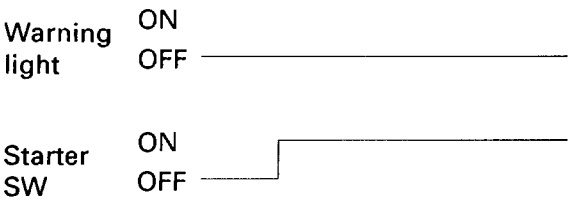	Warning light lighting circuit trouble ➡ to CHART B-1
3	Warning light blinks twice	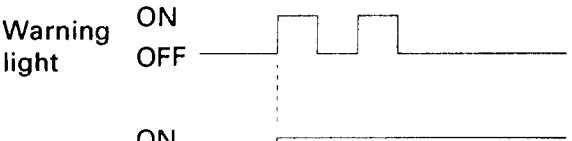	Warning light lighting circuit trouble ➡ to CHART B-2
4	Warning light remains ON	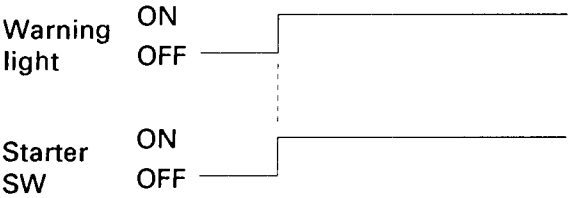	Diagnostic trouble codes are stored. Display diagnostic trouble codes and diagnose on a code basis according to the flow charts.
5	Warning light is actuated while driving	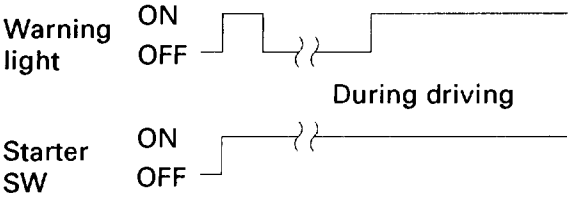	

DIAGNOSTIC TROUBLE CODES (DTCs)

When the warning light in the meter remains ON, the EBCM stores the fault identification and disables the ABS.

1. How to display and erase DTCs:

NOTE:

- If DTCs are not displayed, harness BB14 may be disconnected. Repair the harness and try DTC display again.
- DTCs can be displayed also by TECH 1. For further details, see "MODE F2: TROUBLE CODE" in this section.

(1) How to start DTC display:

- Confirm that the vehicle has come to a complete stop (with the wheels standing still) and that the brake pedal is not depressed. (Unless these two condition are satisfied, DTC display cannot be started.)
- With IGN OFF, connect #1 terminal with #3 terminal (GND) (Fig. 5A4-14). Then turn IGN ON.

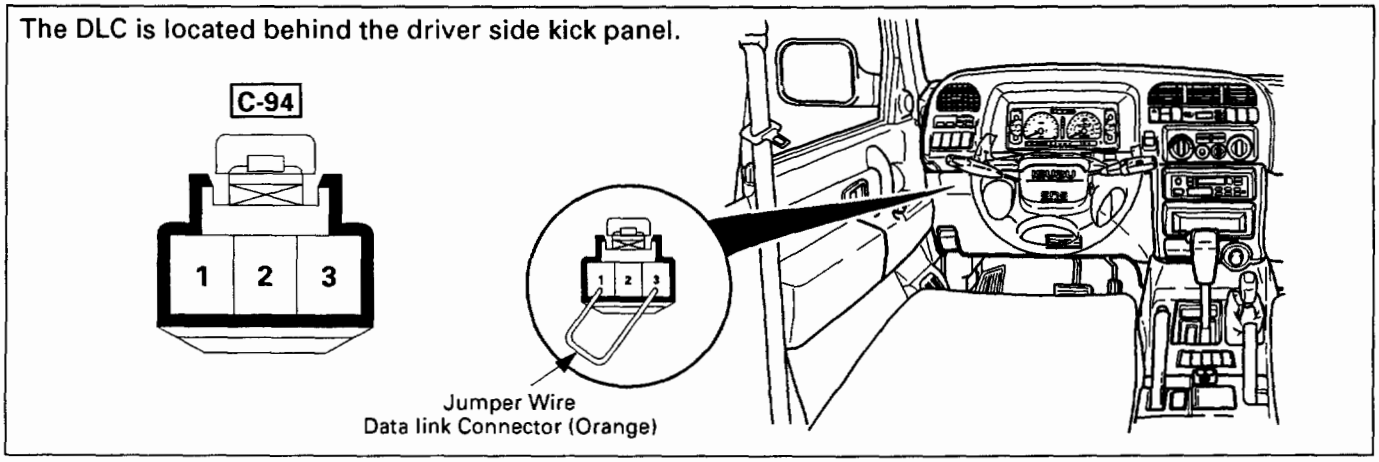

Fig. 5A4-14

- Keep #1 terminal connected with #3 terminal (GND) during DTC display.
  (If #1 terminal is separated from #3 terminal (GND) during display, display will stop.)

(2) DTC display:

- DTC is displayed by blinking warning light.
- Double-digit display
- First, normal DTC 12 is displayed three times and then any other DTCs are displayed three times. (If no other DTCs have been stored, the display of DTC 12 will be repeated.)

(3) How to erase code:

- Connect and disconnect jumper wire between #1 terminal and #3 terminal (GND) at least 3 times within 30 seconds.
- There is no time limit to "opening", but "each grounding" must be more than 1 second and the entire 3-grounding sequence must be completed within 30 seconds.

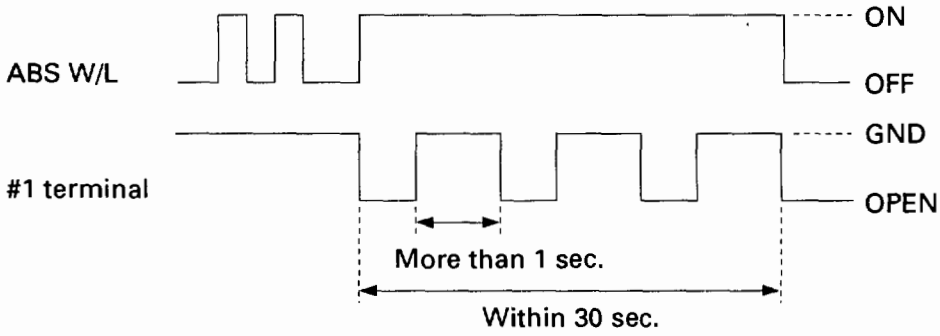

(4) Notes
- If the following should occurs during Diagnostic Trouble Code (DTC) display the display will be discontinued. After initial check, the status that is under the control of ABS will be returned:
  - The vehicle starts (The wheels turn) or the brake pedal is depressed.
- Up to 3 different codes can be stored.
- If the ABS should turn OFF due to an intermittent defect, the system will be restored at the next key cycle, if the initial check finds no abnormality (when IGN is switched from OFF to ON).

(5) An example of DTC display

<Display of DTC 23>

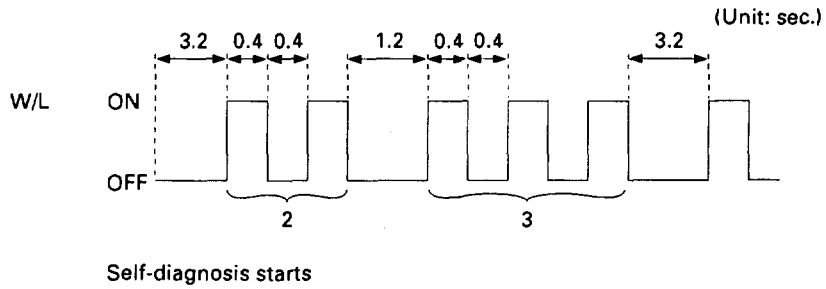

<In case where there are two or more DTCs: 44 & 23>

After displaying DTC 12 three times, one DTC after another is displayed, starting with the most recent one. (However, display is discontinued after about 5 minutes.)

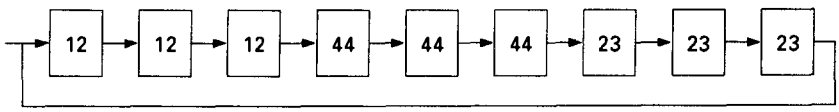

<In case where no DTC has been stored>

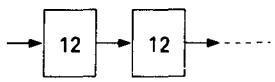

The DTC 12 is displayed repeatedly.
(display is discontinued after about 5 minutes after)

2. Diagnostic trouble codes:
Choose and trace an appropriate flowchart by the numbers listed below to find fault and repair.

Code	Item	Diagnosis	Chart No.
12	Start code	Normal	—
14	EBCM function	Abnormality in input/output, operational and control circuits	B-3
15	Power voltage drop		B-4
21	G-sensor	Wiring disconnection	B-5
22	Brake light switch	Wiring disconnection	B-6
23	Transmission input	Input abnormality	B-7
32	Motor & motor relay	Shorted or disconnected coil	B-8
41	FL wheel valve	Shorted or disconnected coil/wiring	B-9
42	FR wheel valve	Shorted or disconnected coil/wiring	
44	Rear wheel valve	Shorted or disconnected coil/wiring	
45	Valve relay	Shorted or disconnected coil/wiring	B-10
51	FL wheel speed sensor	Disconnected coil/wiring	B-11
52	FR wheel speed sensor	Disconnected coil/wiring	
53	RL wheel speed sensor	Disconnected coil/wiring	
54	RR wheel speed sensor	Disconnected coil/wiring	
61	FL wheel speed sensor	Shorted coil/wiring	B-12
62	FR wheel speed sensor	Shorted coil/wiring	
63	RL wheel speed sensor	Shorted coil/wiring	
64	RR wheel speed sensor	Shorted coil/wiring	
65	Sensor signal input	Wrong number of teeth	B-13

CHART B-1

TECH 1

WITH THE KEY IN THE ON POSITION (BEFORE STARTING THE ENGINE), WARNING LIGHT (W/L) IS NOT ACTUATED.

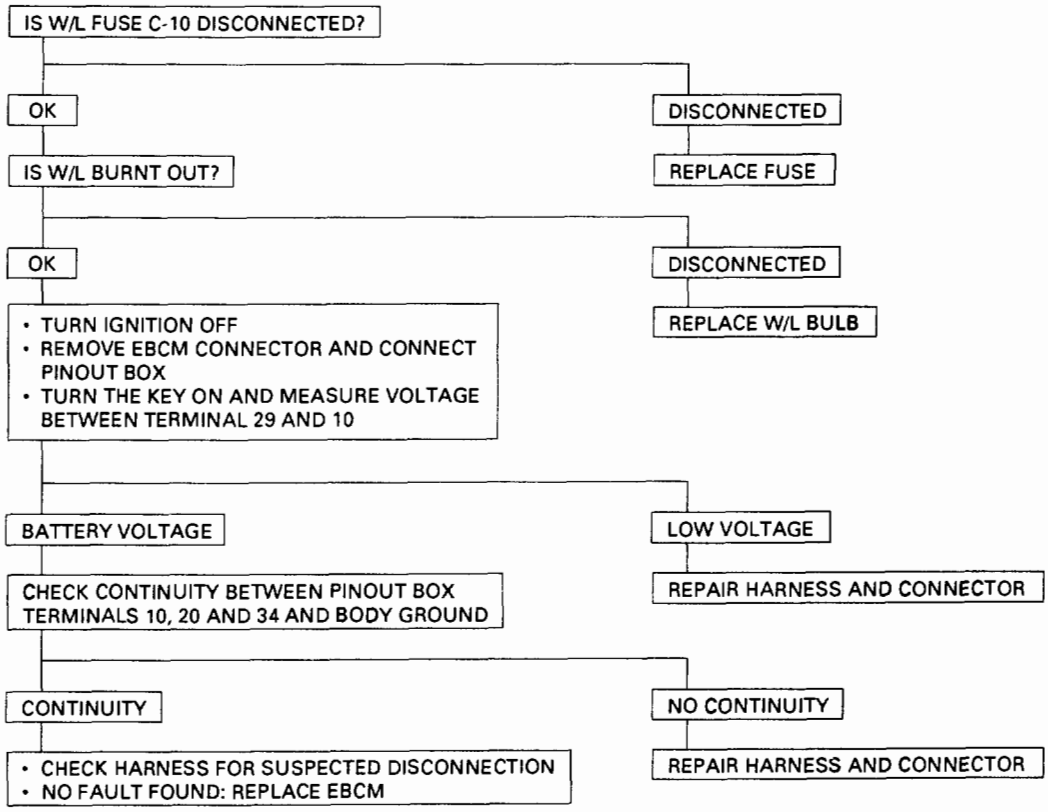

TECH 1

CHART B-2
"ABS" LIGHT FLASHES TWICE WITH KEY ON

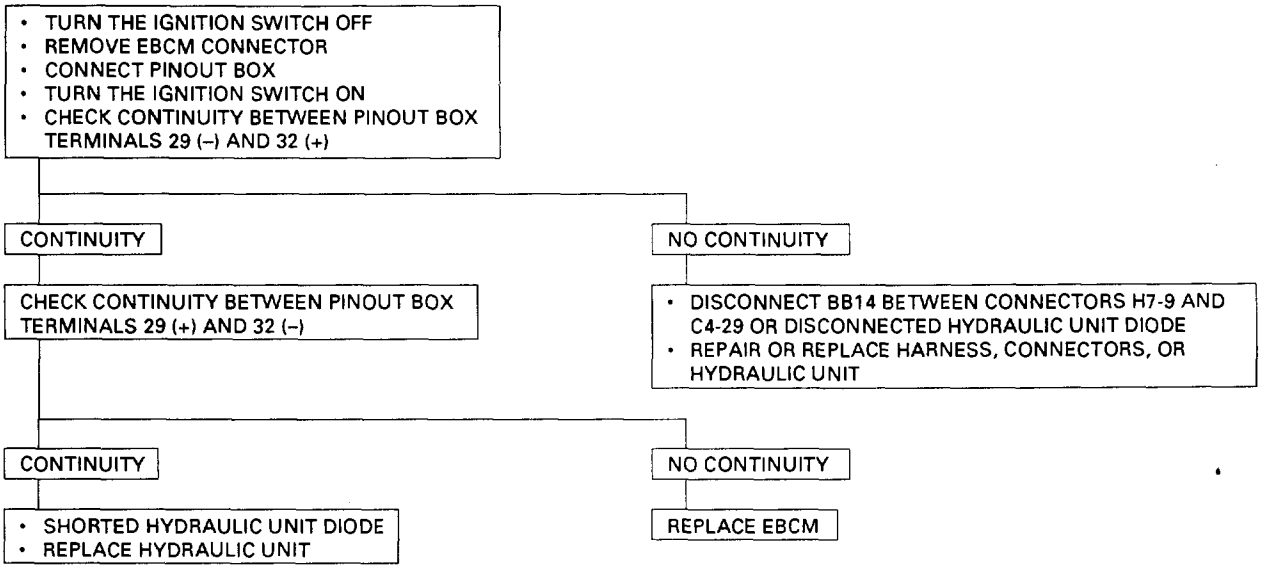

CHART B-3
EBCM ABNORMALITY (DIAGNOSTIC TROUBLE CODE 14)

TECH 1

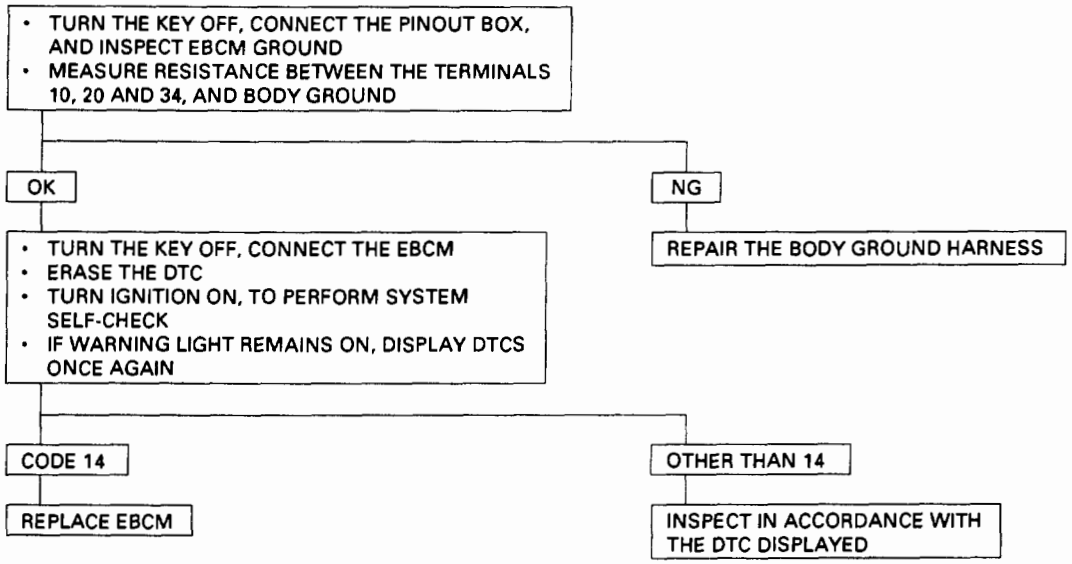

DTC = Diagnostic Trouble Code

TECH 1

CHART B-4
POWER VOLTAGE DROP (DIAGNOSTIC TROUBLE CODE 15)

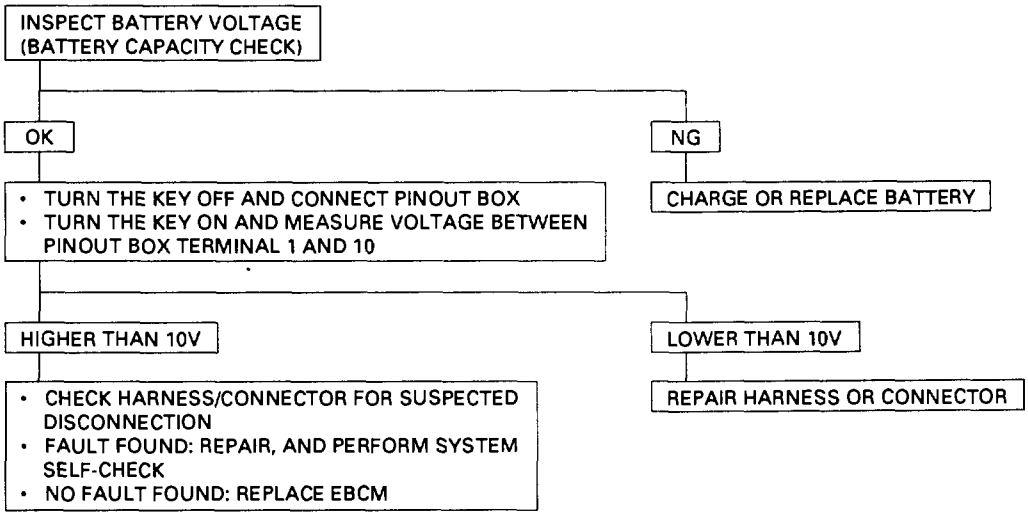

CHART B-5
G-SENSOR CIRCUIT (DIAGNOSTIC TROUBLE CODE 21)

TECH 1

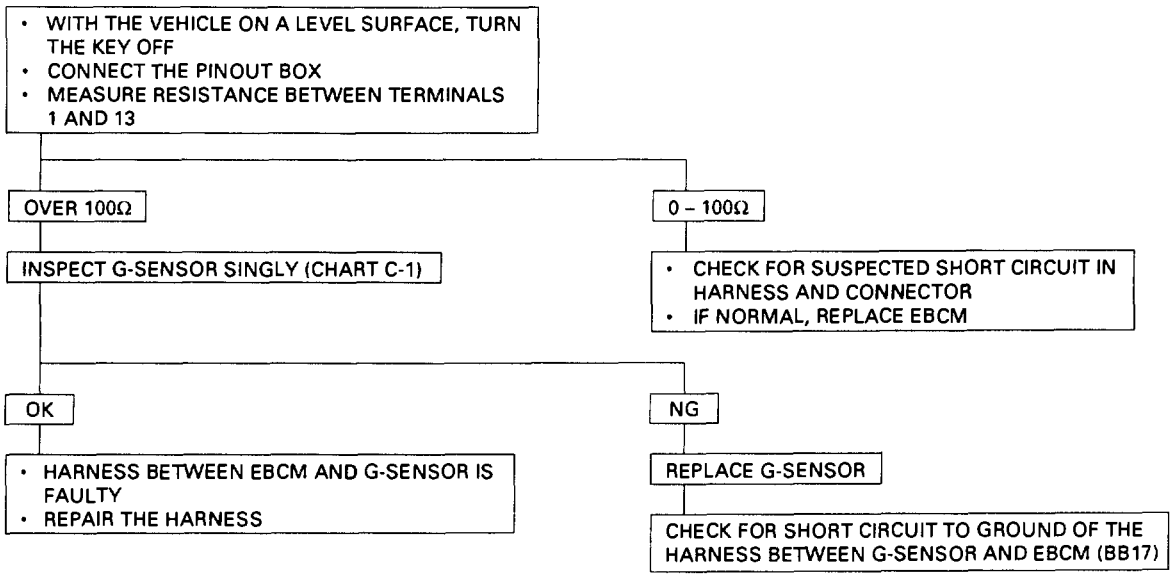

TECH 1

CHART B-6
BRAKE SWITCH TROUBLE (DIAGNOSTIC TROUBLE CODE 22)

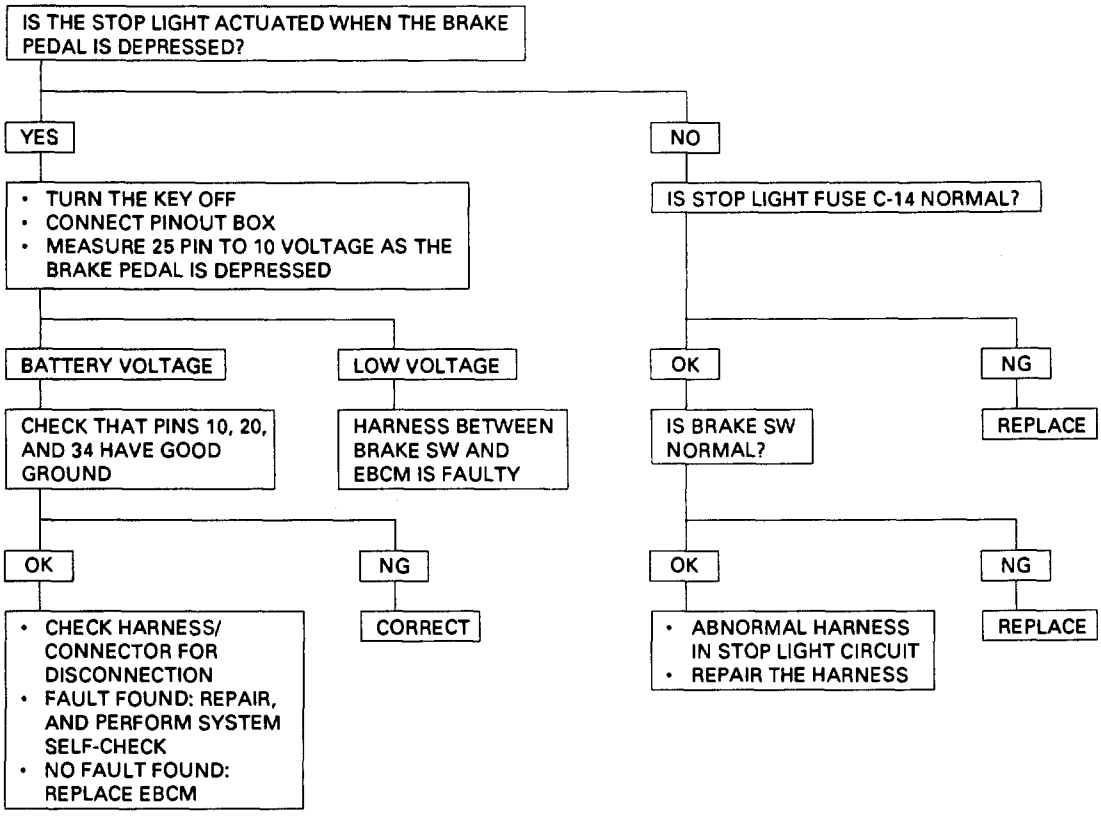

CHART B-7

TECH 1

ABNORMAL TRANSMISSION INPUT (A/T MODEL) (DIAGNOSTIC TROUBLE CODE 23)

- TURN THE KEY OFF, CONNECT THE PINOUT BOX
- TURN THE KEY ON
- CHECK CONTINUITY BETWEEN THE PINOUT BOX TERMINAL 16 AND 20

SHIFT POSITION	P	R	N	D	2	L
CONTINUITY: ○ NO CONTINUITY: ×	×	○	×	×	×	○

NG

- NG IN "P", "N", "D" OR "2" RANGE
  - TURN THE KEY OFF
  - WITH A/T CONTROLLER CONNECTOR REMOVED, CHECK 16 AND 20 CONTINUITY
  - YES
    - HARNESS SHORT TO GND
    - REPAIR HARNESS
  - NO
    - CHECK A/T CONTROLLER
- NG IN "R" OR "L" RANGE
  - TURN THE KEY OFF
  - WITH A/T CONTROLLER CONNECTOR REMOVED, CHECK 16 AND A/T CONTROLLER CONNECTOR B10 CONTINUITY
  - YES
    - CHECK A/T CONTROLLER
  - NO
    - DISCONNECTED HARNESS
    - REPAIR HARNESS

OK

C-90

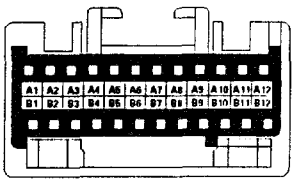

CHART B-7

TECH 1

ABNORMAL TRANSMISSION INPUT (M/T MODEL) (DIAGNOSTIC TROUBLE CODE 23)

- WITH THE KEY TURNED OFF, CONNECT PINOUT BOX
- CHECK CONTINUITY BETWEEN PINOUT BOX TERMINAL 16 AND 10 (GEAR POSITION-N)

NO CONTINUITY

TURN THE KEY ON AND MEASURE THE VOLTAGE BETWEEN PINOUT BOX TERMINAL 16 AND 20 WITH REFERENCE TO THE TABLE BELOW:

SHIFT POSITION	1, 2, R	OTHER THAN 1, 2, R
VOLTAGE	11.5~14.5V	0V

NOT AS SPECIFIED

- TRANSMISSION SW TROUBLE
- DISCONNECTED HARNESS
- REPAIR SW AND HARNESS

AS SPECIFIED

- SUSPECTED HARNESS/CONNECTOR SHORT TO POWER SOURCE/GND
- SUSPECTED SHORTED TRANSMISSION SW
- FAULT FOUND: REPAIR, AND PERFORM SYSTEM SELF-CHECK
- NO FAULT FOUND: REPLACE EBCM

CONTINUITY

- SHORTED SWITCH/HARNESS
- REPAIR SWITCH OR HARNESS

TECH 1

CHART B-8
HYDRAULIC UNIT (HU) PUMP MOTOR AND MOTOR RELAY CIRCUIT (DIAGNOSTIC TROUBLE CODE 32)

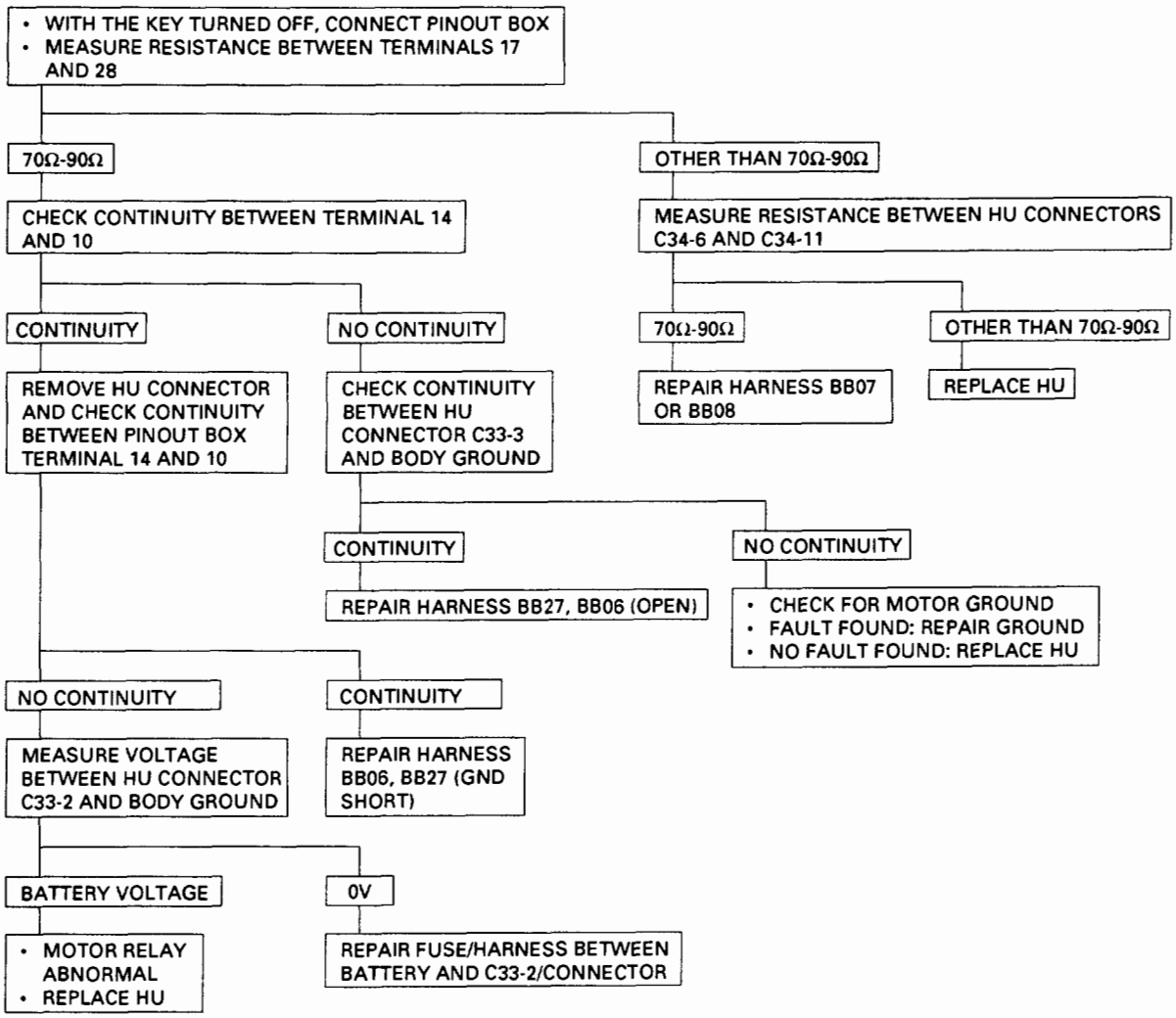

C-33

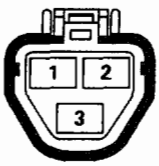

C-33

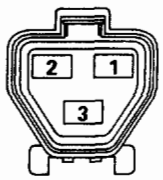

C-34

CHART B-9

TECH 1

SOLENOID VALVE ABNORMALITY (DIAGNOSTIC TROUBLE CODE 41, 42 & 44)

- WITH THE KEY TURNED OFF, CONNECT PINOUT BOX
- MEASURE THE FOLLOWING TERMINAL RESISTANCE ACCORDING TO THE SPECIFIC DIAGNOSTIC TROUBLE CODE STORED:
  - CODE 41 (FL SOLENOID VALVE)
    - BETWEEN PINOUT BOX TERMINALS 2 AND 32
  - CODE 42 (FR SOLENOID VALVE)
    - BETWEEN PINOUT BOX TERMINALS 35 AND 32
  - CODE 44 (REAR SOLENOID VALVE)
    - BETWEEN PINOUT BOX 18 AND 32

OTHER THAN 0.6-1.8Ω

MEASURE SOLENOID VALVE RESISTANCE:
- CODE 41 (FL SOLENOID VALVE)
  - BETWEEN C34-4 AND C34-7
- CODE 42 (FR SOLENOID VALVE)
  - BETWEEN C34-3 AND C34-7
- CODE 44 (REAR SOLENOID VALVE)
  - BETWEEN C34-2 AND C34-7

OTHER THAN 0.6-1.8Ω

REPLACE HYDRAULIC UNIT

0.6-1.8Ω

REPAIR HARNESS OR CONNECTOR BETWEEN HYDRAULIC UNIT AND EBCM

0.6-1.8Ω

- CHECK FOR FAULTS IN HARNESS BETWEEN HYDRAULIC UNIT AND EBCM
- FAULT FOUND: REPAIR, AND PERFORM SYSTEM SELF-CHECK
- NO FAULT FOUND: REPLACE EBCM

C-34

CHART B-10
VALVE RELAY ABNORMALITY (DIAGNOSTIC TROUBLE CODE 45)

TECH 1

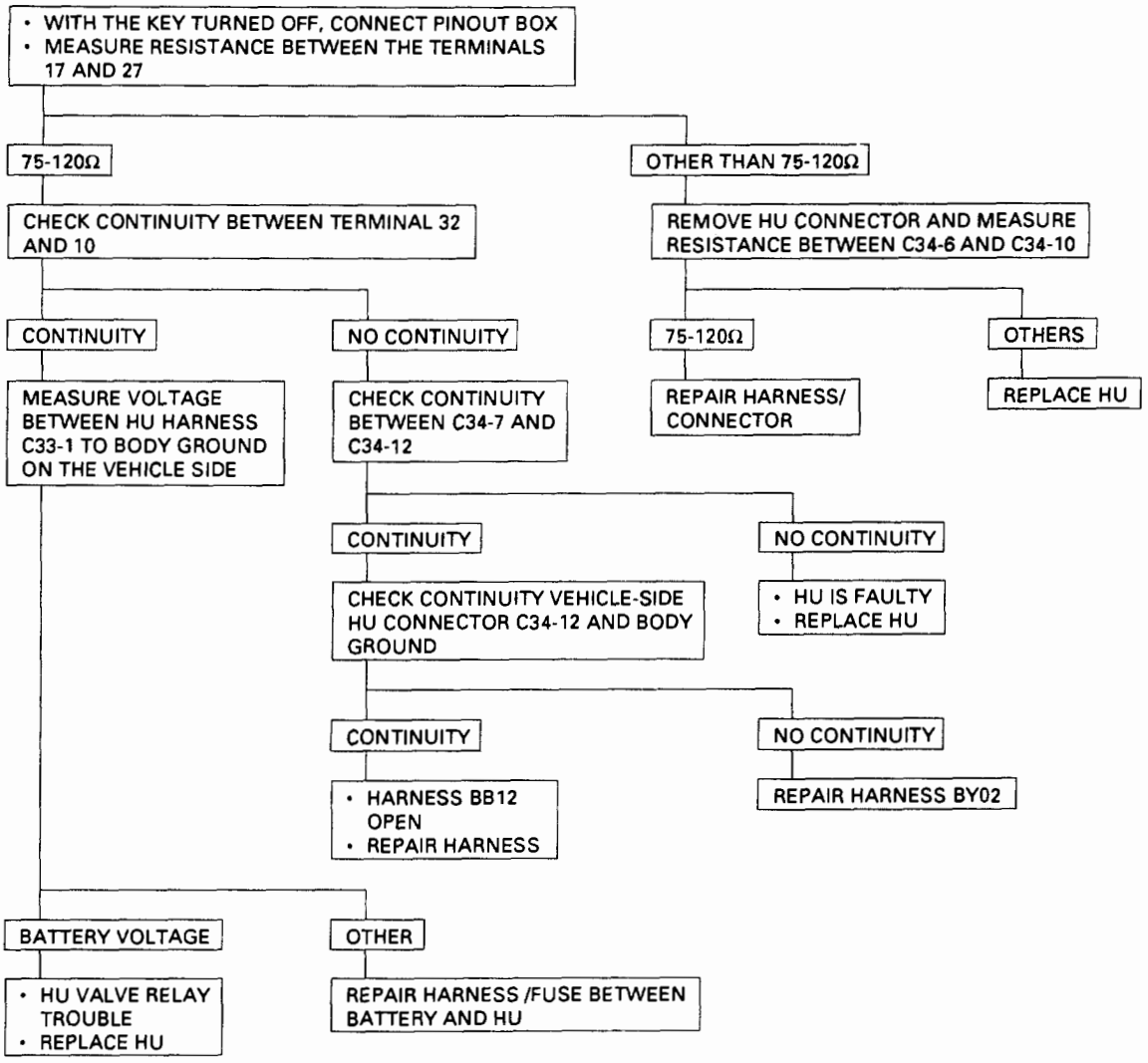

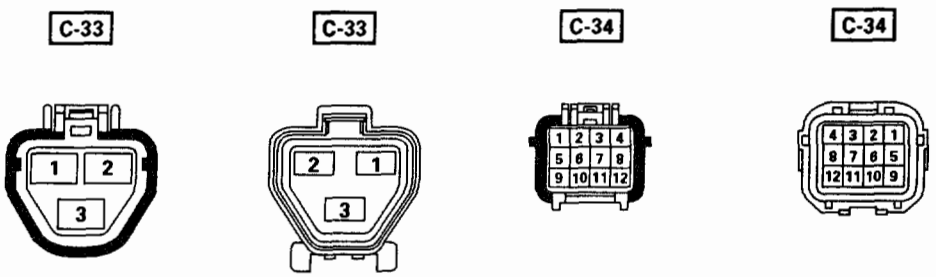

CHART B-11

TECH 1

SPEED SENSOR DISCONNECTION (DIAGNOSTIC TROUBLE CODE 51, 52, 53, & 54)

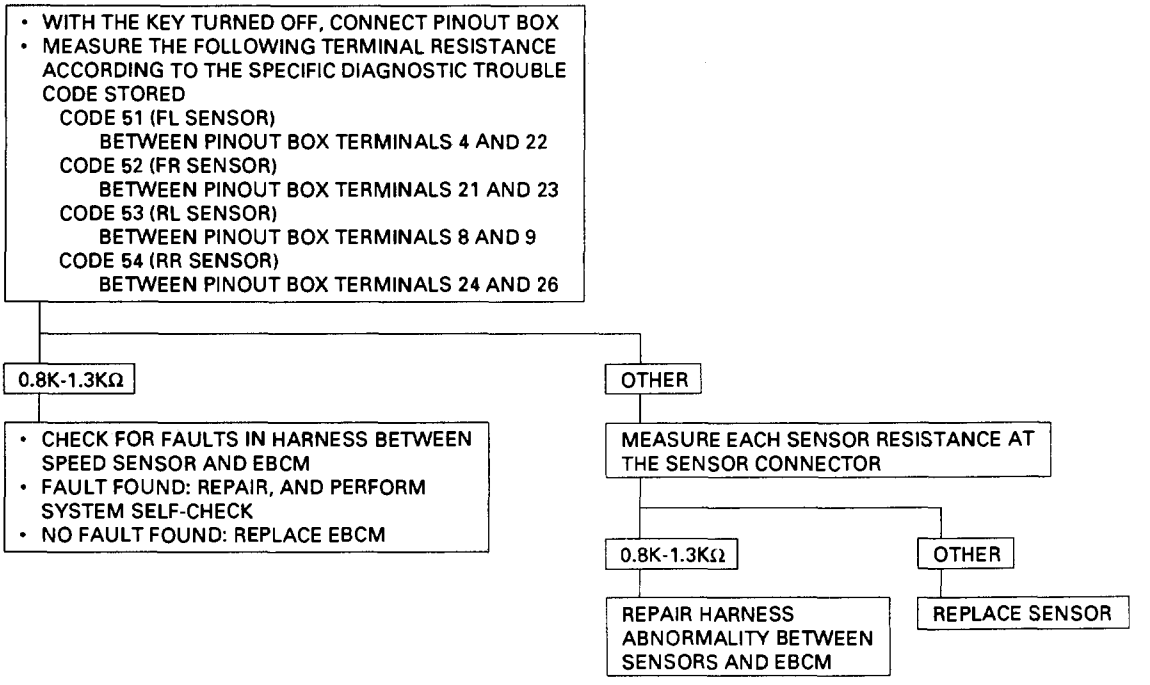

CHART B-12

TECH 1

SPEED SENSOR SHORT CIRCUIT (DIAGNOSTIC TROUBLE CODE 61, 62, 63, & 64)

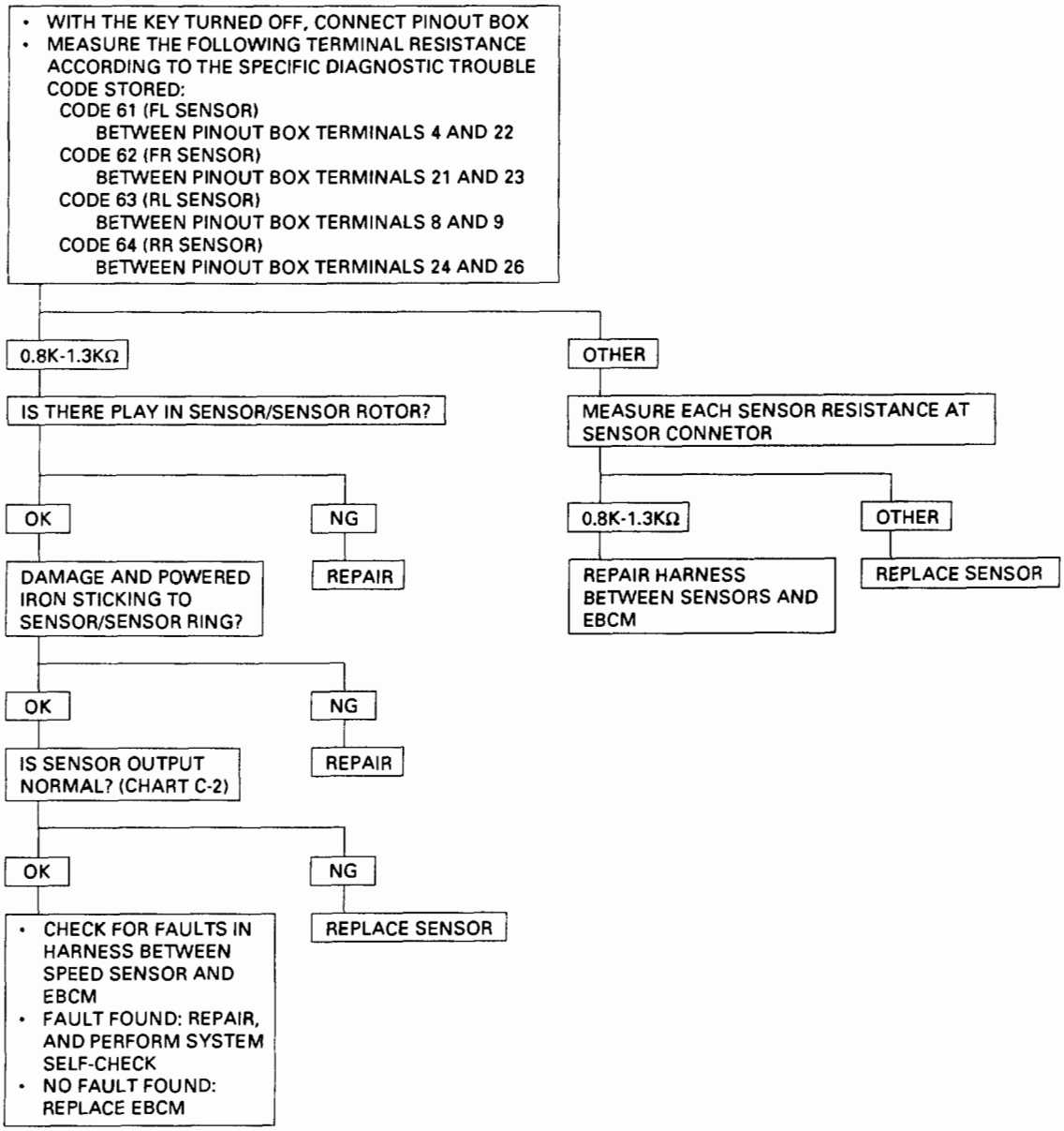

CHART B-13, TB-13 ~~TECH 1~~ TECH 1

SENSOR SIGNAL INPUT ABNORMALITY (DIAGNOSTIC TROUBLE CODE 65)

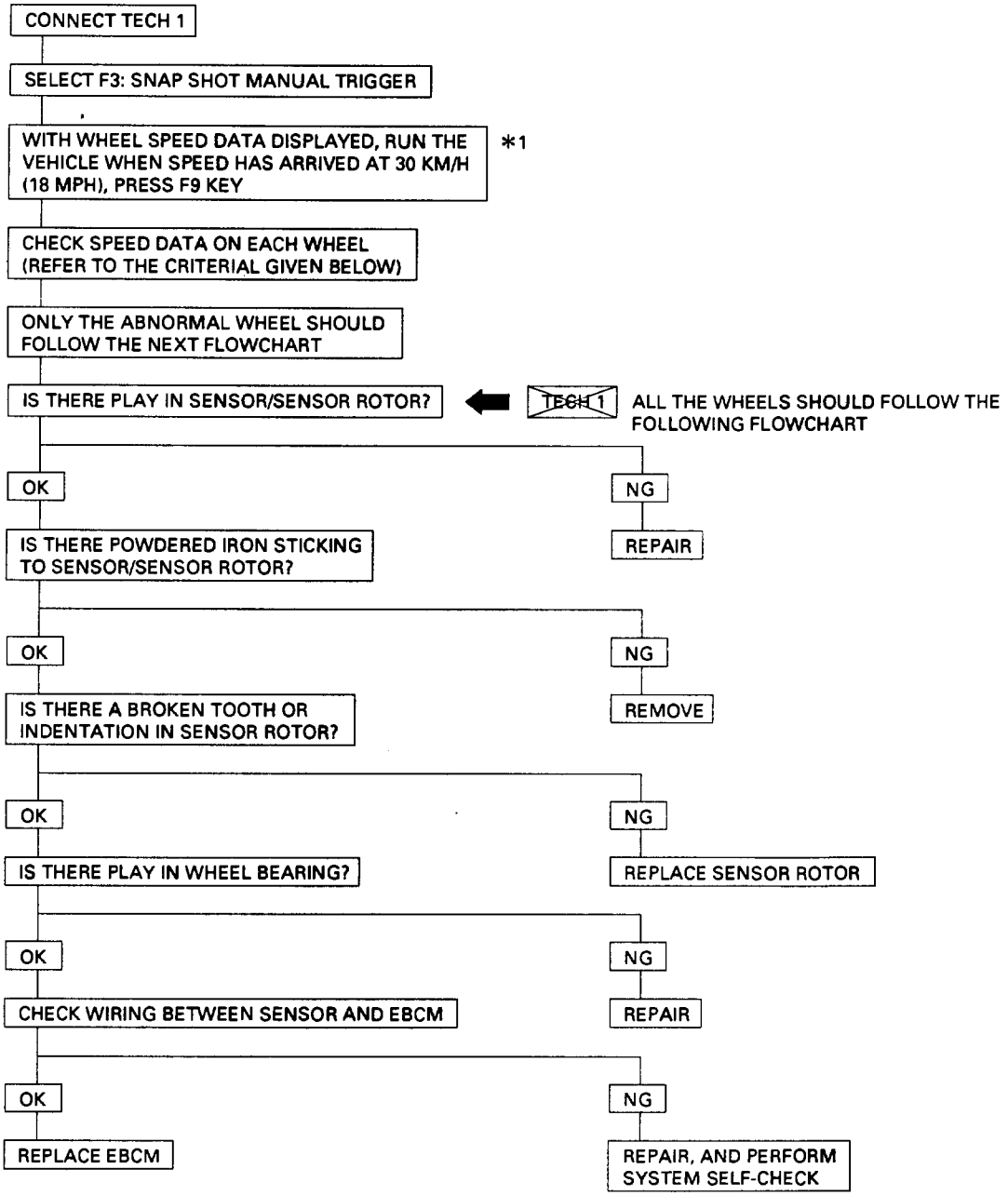

Sensor Signal Abnormality Criteria using TECH 1

1) While driving, the speed of one or two wheels is 25% or more higher than that of the other wheels.
2) The speed of one or two wheels is 10 km/h (6 mph) or more higher than that of the other wheels.
3) During steady driving, wheel speed changes abruptly.

*1 The vehicle must run on a level paved road.

UNIT INSPECTION PROCEDURE

This section describes the following inspection procedures referred to during "SYMPTOM DIAGNOSIS" and "DIAGNOSIS BY 'ABS' WARNING LIGHT ILLUMINATION PATTERN":

	without TECH 1	with TECH 1
G-sensor Unit Inspection	Chart C-1	–
Sensor Output Inspection	Chart C-2	Chart TC-2
Transfer SW Inspection	Chart C-3	Chart TC-3
Transmission SW Inspection	Chart C-4	Chart TC-4

TECH 1

CHART C-1
G-SENSOR UNIT INSPECTION PROCEDURE

REMOVE G-SENSOR FROM THE VEHICLE

- DISCONNECT THE G-SENSOR CONNECTOR B25
- MEASURE RESISTANCE BETWEEN G-SENSOR CONNECTOR B25-1 TO B25-2 UNDER THE FOLLOWING CONDITIONS:

CONDITION	STANDARD	G-SENSOR ON/OFF
G-SENSOR PLACED HORIZONTAL	100Ω OR LESS	ON
G-SENSOR TILTED TO 30° OR MORE	100kΩ OR MORE	OFF

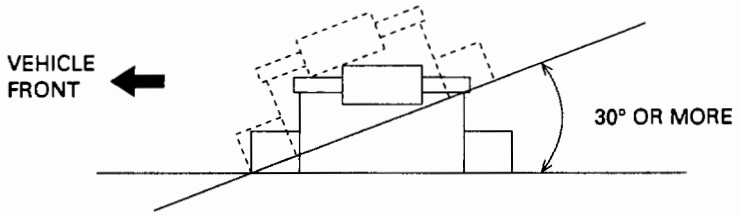

WITHIN STANDARD → OK

OTHER THAN STANDARD → NG

TECH 1

CHART C-2
SENSOR OUTPUT INSPECTION PROCEDURE

- TURN THE KEY OFF AND CONNECT PINOUT BOX
- JACK UP THE VEHICLE WITH ALL FOUR WHEELS OFF THE GROUND
- MEASURE THE AC VOLTAGE BERWEEN PINOUT BOX TERMINALS WHILE TURNING EACH WHEEL AT A SPEED OF 1 RPS:
  - FL WHEEL
    BETWEEN TERMINALS 4 AND 22
  - FR WHEEL
    BETWEEN TERMINALS 21 AND 23
  - RL WHEEL
    BETWEEN TERMINALS 8 AND 9
  - RR WHEEL
    BETWEEN TERMINALS 24 AND 26

UNDER 200 mV

OVER 200 mV

OK

- DISCONNECT THE WHEEL SPEED SENSOR
- MEASURE RESISTANCE BETWEEN THE WHEEL SPEED SENSOR CONNECTOR:
  - FL WHEEL
    BETWEEN TERMINALS C13-1 AND C13-2
  - FR WHEEL
    BETWEEN TERMINALS C41-1 AND C41-2
  - RL WHEEL
    BETWEEN TERMINALS F3-1 AND F3-2
  - RR WHEEL
    BETWEEN TERMINALS F2-1 AND F2-2

OUTSIDE 0.8K-1.3KΩ

- WHEEL SPEED SENSOR IS FAULTY
- REPLACE THE WHEEL SPEED SENSOR

0.8K-1.3KΩ

CONNECTOR IS FAULTY, OR OPEN OR SHORT CIRCUIT OF HARNESS BETWEEN WHEEL SPEED SENSOR CONNECTOR AND EBCM

INSPECT AND CORRECT THE CONNECTOR OR HARNESS

C-13

C-41

F-2

F-3

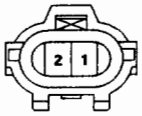

TECH 1

CHART TC-2
SENSOR OUTPUT INSPECTION PROCEDURE

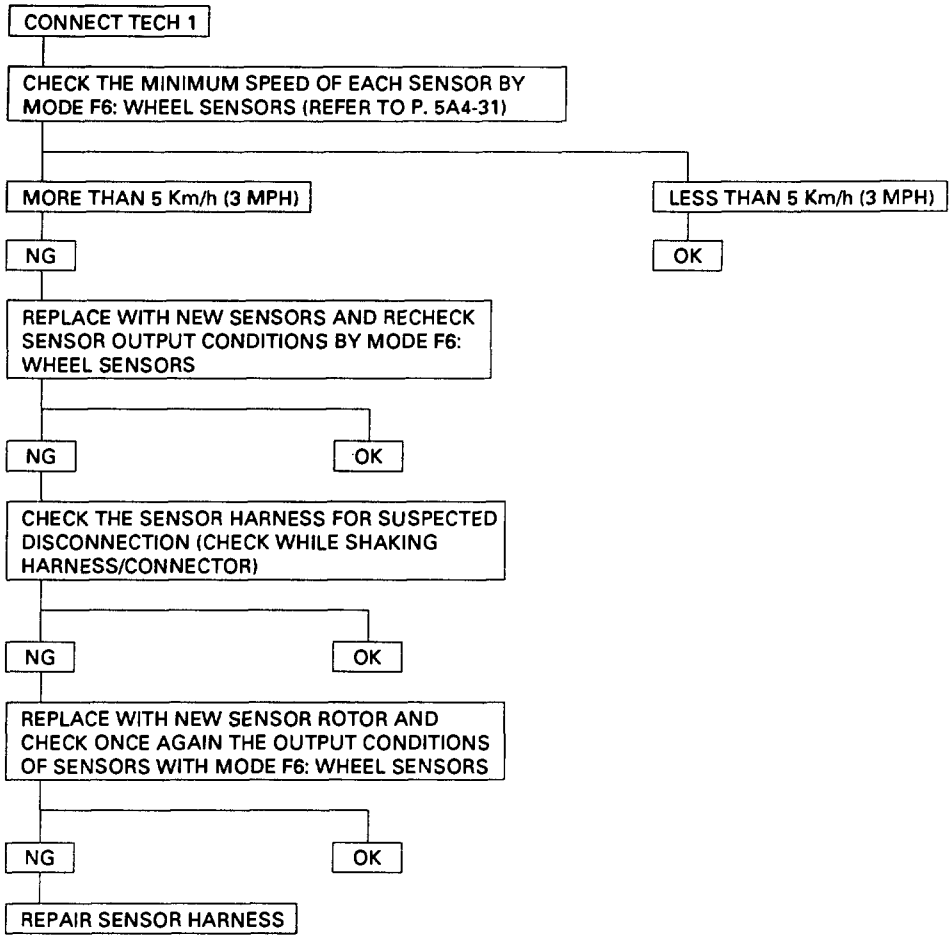

TECH 1

CHART C-3
4WD SWITCH INSPECTION PROCEDURE

WITH THE KEY TURNED OFF, CONNECT PINOUT BOX

TURN THE KEY ON

MEASURE THE VOLTAGE BETWEEN THE TERMINALS 15 AND 20 IN THE FOLLOWING T/F LEVER POSITIONS:

T/F LEVER POSITION	STANDARD VOLTAGE
2H	12V
4H	OV
4L	OV

OTHER THAN STANDARD

AS STANDARD

OK

CHECK CONTINUITY BETWEEN 4WD SW CONNECTOR M11-1 AND M12-1

2H	NO CONTINUITY
4L, 4H	CONTINUITY

NG

REPLACE 4WD SW

OK

REPAIR CONNECTOR OR HARNESS BETWEEN CONNECTOR C4-15 AND C16-3

M-11

M-12

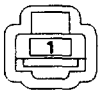

TECH 1

CHART TC-3
4WD SWITCH INSPECTION PROCEDURE

CONNECT TECH 1

CHECK T/F LEVER INPUT FROM F0 DATA LIST:

CLOSE	4H, 4L
OPEN	2H

NG → CHECK CONTINUITY BETWEEN 4WD SW CONNECTOR M11-1 AND M12-1

OK → REPAIR CONNECTOR OR HARNESS BETWEEN CONNECTOR C4-15 AND C16-3

2H	NO CONTINUITY
4L, 4H	CONTINUITY

NG → REPLACE 4WD SW

OK → REPAIR CONNECTOR OR HARNESS BETWEEN CONNECTOR C4-15 AND C16-3

M-11

M-12

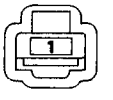

TECH 1

CHART C-4
TRANSMISSION INPUT INSPECTION PROCEDURE (A/T MODEL)

- TURN THE KEY OFF, CONNECT THE PINOUT BOX
- TURN THE KEY ON
- CHECK CONTINUITY BETWEEN THE PINOUT BOX TERMINAL 16 AND 20

SHIFT POSITION	P	R	N	D	2	L
CONTINUITY: ○ NO CONTINUITY: ×	×	○	×	×	×	○

NG → NG IN "P", "N", "D" OR "2" RANGE

- TURN THE KEY OFF
- WITH A/T CONTROLLER CONNECTOR REMOVED, CHECK 16 AND 20 CONTINUITY

YES →
- HARNESS SHORT TO GND
- REPAIR HARNESS

NO →
- CHECK A/T CONTROLLER

OK → NG IN "R" OR "L" RANGE

- TURN THE KEY OFF
- WITH A/T CONTROLLER CONNECTOR REMOVED, CHECK 16 AND A/T CONTROLLER CONNECTOR B10 CONTINUITY

YES →
- CHECK A/T CONTROLLER

NO →
- DISCONNECTED HARNESS
- REPAIR HARNESS

C-90

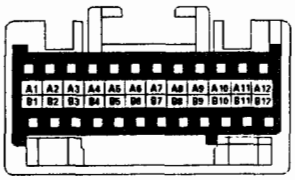

TECH 1

CHART C-4
TRANSMISSION INPUT INSPECTION PROCEDURE (M/T MODEL)

- WITH THE KEY TURNED OFF, CONNECT PINOUT BOX AND EBCM
- CHECK CONTINUITY BETWEEN THE TERMINAL 16 AND 20 (GEAR POSITION–N)

NO CONTINUITY

WHIT KEY ON, MEASURE THE VOLTAGE BETWEEN 16 AND 20 AS FOLLOWS:

SHIFT POSITIONS	1, 2, R	OTHER POSITIONS
VOLTAGE	11.5~14.5V	0V

OTHER THAN SPECIFIED

- T/M SW IS FAULTY
- DISCONNECTED HARNESS
- REPAIR SW OR HARNESS

AS SPECIFIED

OK

CONTINUITY

- SW OR HARNESS SHORT TO GND
- REPAIR SW OR HARNESS

TECH 1

CHART TC-4
TRANSMISSION INPUT INSPECTION PROCEDURE

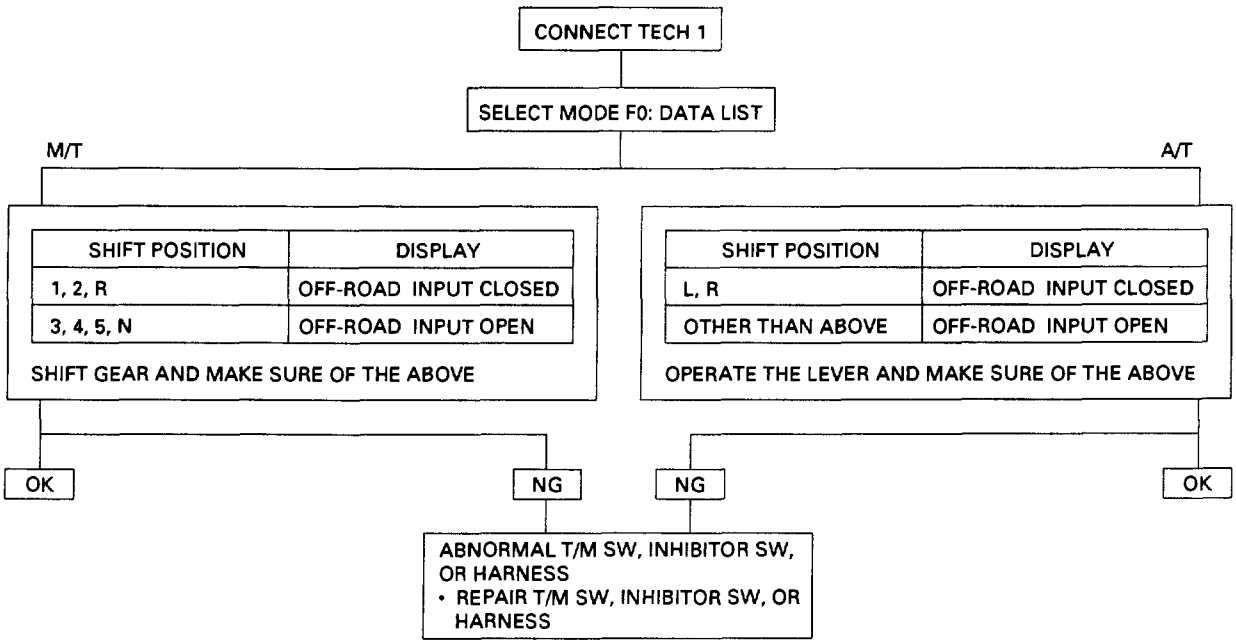

ON-VEHICLE SERVICE

CAUTION:
Replace all components included in repair kits used to service this system. Lubricate rubber parts with clean, fresh brake fluid to ease assembly. Do not use shop air with in-line lubricators on brake parts, as damage to rubber components may result. If any hydraulic component is removed or brake line disconnected, it may be necessary to bleed part or all of the brake system.

NOTE:
The use of rubber hoses or parts other than those furnished specifically for the Antilock Brake System may lead to functional problems requiring major overhaul.

HYDRAULIC UNIT

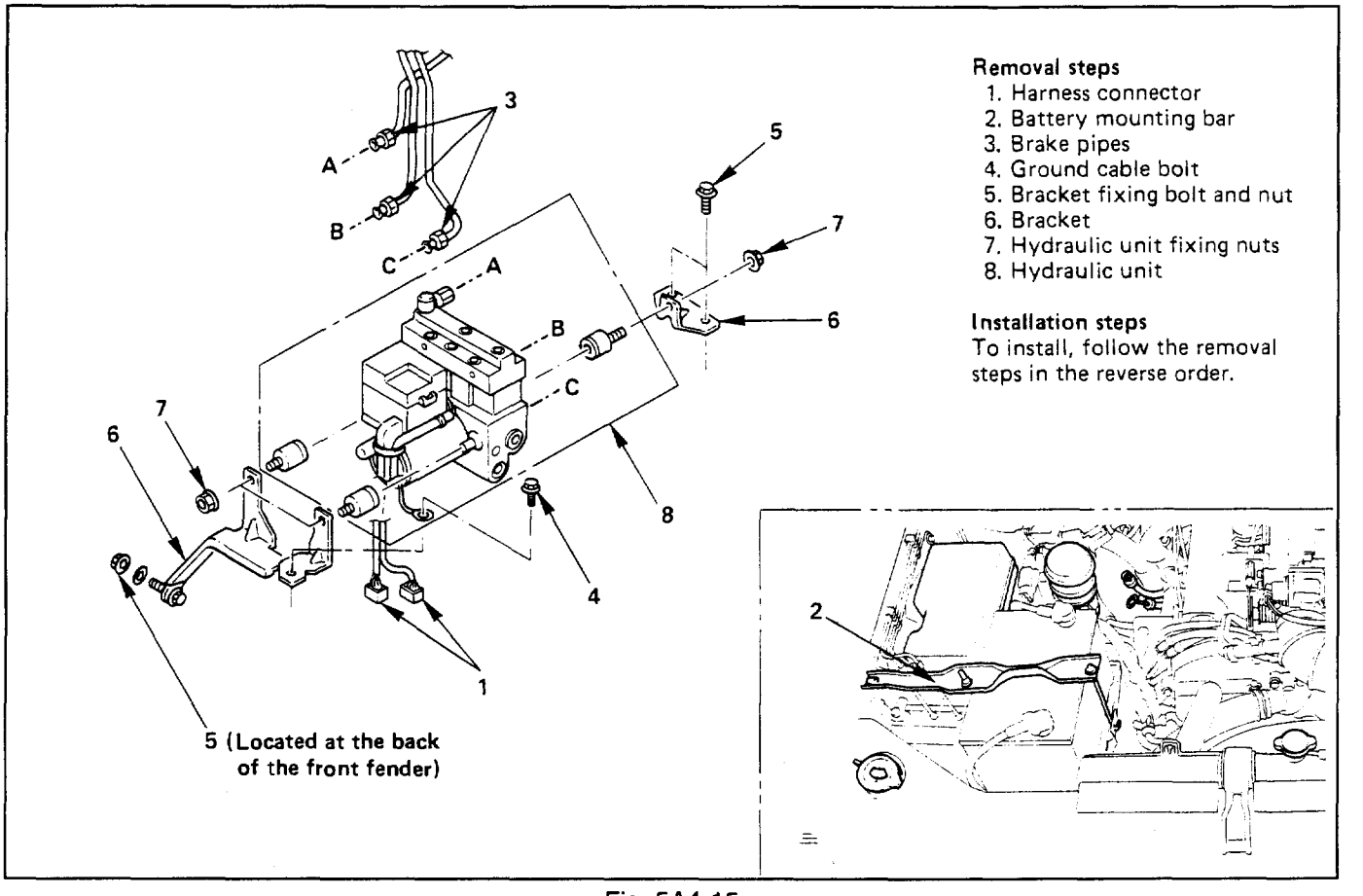

Removal steps
1. Harness connector
2. Battery mounting bar
3. Brake pipes
4. Ground cable bolt
5. Bracket fixing bolt and nut
6. Bracket
7. Hydraulic unit fixing nuts
8. Hydraulic unit

Installation steps
To install, follow the removal steps in the reverse order.

Fig. 5A4-15

REMOVAL

1. **Harness connector**
2. **Battery mounting bar**
3. **Brake pipes**
   - After disconnecting brake pipe, cap or tape the openings of the brake pipe to prevent the entry of foreign matter.
4. **Ground cable bolt**
5. **Bracket fixing bolt and nut**
6. **Bracket**
7. **Hydraulic unit fixing nuts**
8. **Hydraulic unit**

INSTALLATION

To install, follow the removal steps in the reverse order, noting the following points:

	Torque N·m (lb·ft)
Hydraulic unit fixing nuts	22 (16)
Bracket fixing bolt	24 (17)
Ground cable	14 (10)
Brake pipe (joint bolts)	16 (12)

- After installing the hydraulic unit, bleed brakes completely. See Section 5A "Hydraulic Brakes".

ELECTRONIC BRAKE CONTROL MODULE (EBCM)

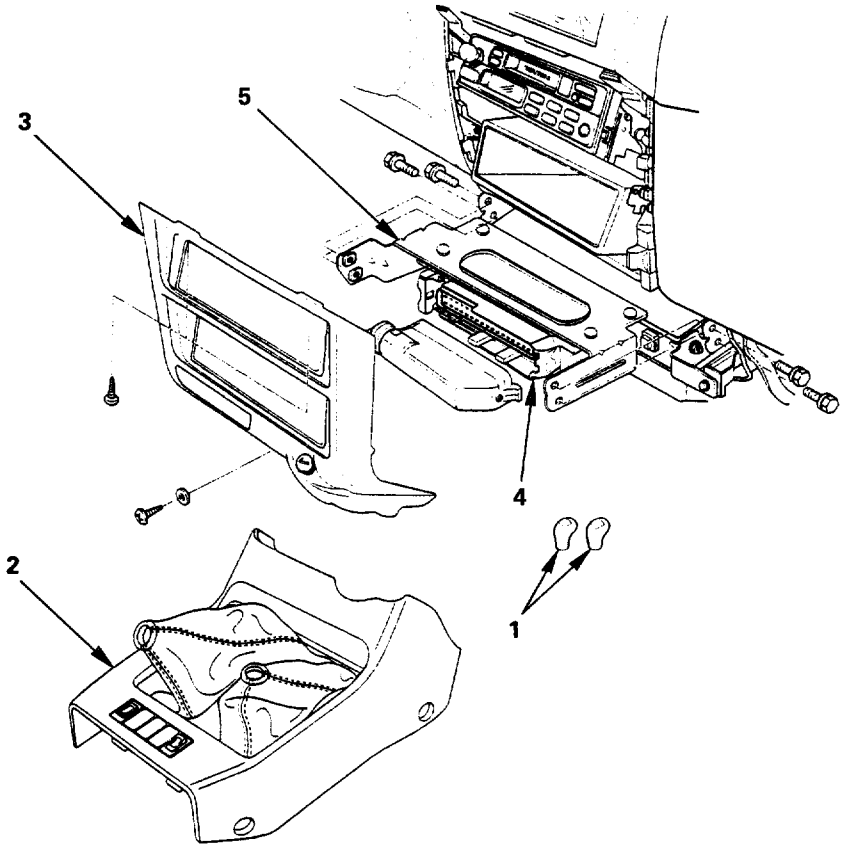

Removal steps
1. Shift knob
2. Front console assembly
3. Lower cluster assembly
4. EBCM assembly
5. Bracket

Installation steps
To install, follow the removal steps in the reverse order.

Fig. 5A4-16

REMOVAL

1. **Shift knob**
2. **Front console assembly**
   - To remove the front console, refer to section 10 "Body".
3. **Lower cluster assembly**
4. **EBCM assembly**
   - Disconnect the EBCM connector from EBCM.
   - Remove four EBCM fixing bolts.
5. **Bracket**
   - Disconnect the bracket from EBCM.

INSTALLATION

5. **Bracket**
   - Connect the bracket to the EBCM.
4. **EBCM assembly**
   - Tighten the EBCM assembly fixing bolts to the specified torque.

Torque	N·m (lb·in)	8 (69)

3. **Lower cluster assembly**
2. **Front console assembly**
1. **Shift knob**

G-SENSOR

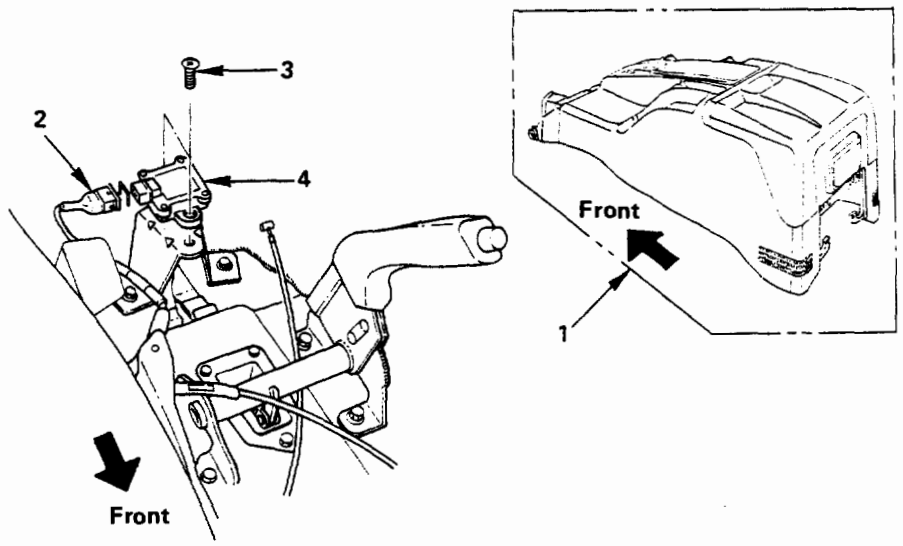

Removal steps
1. Center console
2. G-sensor wiring connector
3. G-sensor fixing bolt
4. G-sensor

Installation steps
To install, follow the removal steps in the reverse order.

Fig. 5A4-17

REMOVAL

1. **Center console**
   - Refer to "Center Console Removal" in Section 10.
2. **G-sensor wiring connector**
3. **G-sensor fixing bolt**
4. **G-sensor**

INSPECTION AND REPAIR

Refer to "CHART C-1" in this Section.

INSTALLATION

4. **G-sensor**
   - Care should be taken so that the G-sensor is not installed in the wrong direction.
3. **G-sensor fixing bolt**
   - Tighten the fixing bolt to the specified torque.

Torque	N·m (lb·in)	6 (53)

2. **G-sensor wiring connector**
1. **Center console**
   - Refer to "Center Console Installation" in Section 10.

FRONT WHEEL SPEED SENSOR

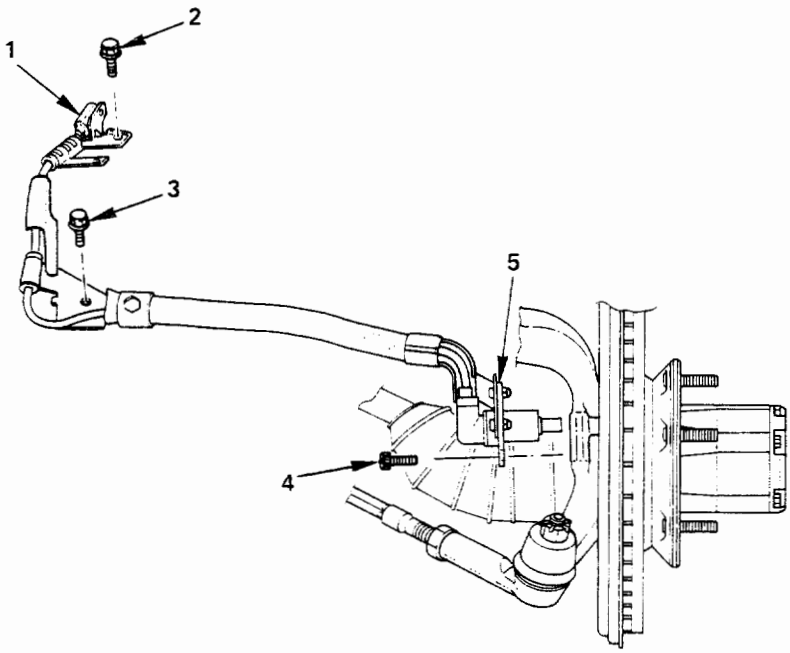

Removal steps
1. Speed sensor connector
2. Sensor cable fixing bolt (Upper side)
3. Sensor cable fixing bolt (Lower side)
4. Sensor fixing bolt
5. Speed sensor

Installation steps
To install, follow the removal steps in the reverse order.

Fig. 5A4-18

REMOVAL

1. **Speed sensor connector**
2. **Sensor cable fixing bolt (Upper side)**
3. **Sensor cable fixing bolt (Lower side)**
4. **Sensor fixing bolt**
5. **Speed sensor**

INSPECTION AND REPAIR

- Check the speed sensor pole piece for presence of foreign materials; remove any dirt, etc.
- Check the pole piece for damage; replace speed sensor if necessary.
- Check the speed sensor cable for short or open circuit, and replace with a new one if necessary. To check for cable short or open, bend or stretch the cable while checking for continuity.
- Check the sensor ring for damage including tooth chipping, and if damaged, replace the sensor ring assembly. Refer to removal of the sensor ring in Section 4C "Front hub and disc".

INSTALLATION

5. **Speed sensor**
   - Take care not to hit the speed sensor pole piece during installation.
4. **Speed sensor fixing bolt**
   - Tighten the fixing bolt to the specified torque.

Torque	N·m (lb·in)	8 (69)

3. **Speed sensor cable fixing bolt (Lower side)**
   - Tighten the fixing bolt to the specified torque.

Torque	N·m (lb·ft)	24 (18)

2. **Speed sensor cable fixing bolt (Upper side)**
   - Tighten the fixing bolt to the specified torque.

Torque	N·m (lb·in)	6 (52)

   - Confirm that a white line marked on the cable is not twisted when connecting the speed sensor cable.
1. **Speed sensor connector**

REAR WHEEL SPEED SENSOR

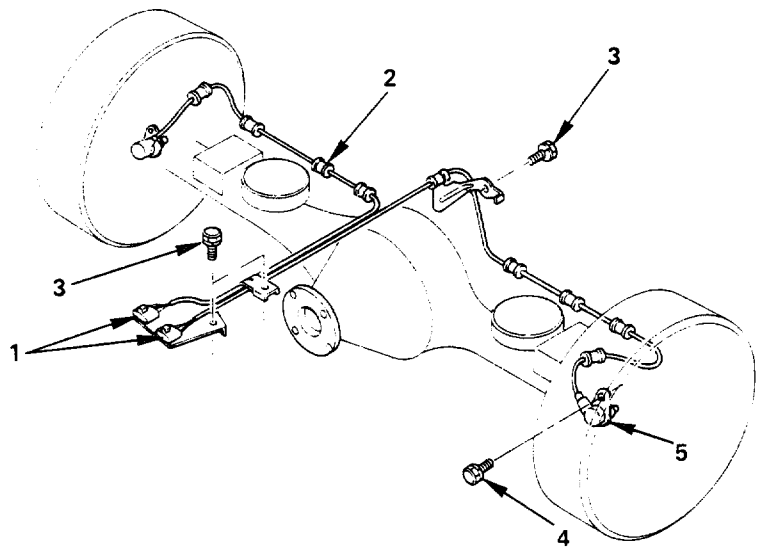

Removal steps
1. Speed sensor connector
2. Clip (11 pieces)
3. Sensor cable fixing bolt
4. Sensor fixing bolt
5. Speed sensor

Installation steps
To install, follow the removal steps in the reverse order.

FIG. 5A4-19

REMOVAL

1. **Speed sensor connector**
2. **Clip**
3. **Sensor cable fixing bolt**
4. **Sensor fixing bolt**
5. **Speed sensor (Fig. 5A4-19)**

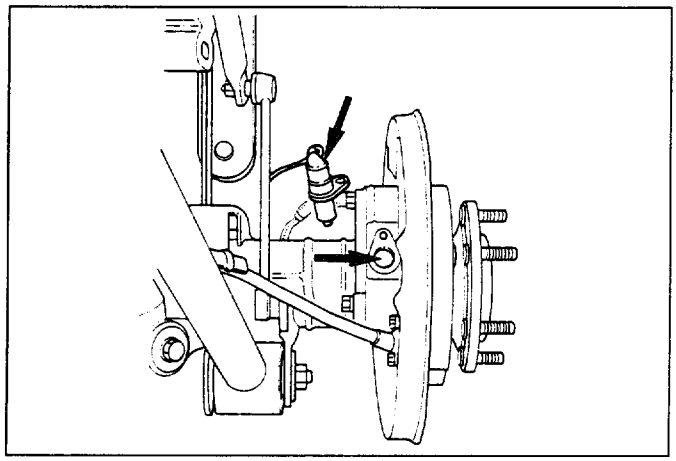

Fig. 5A4-20

INSPECTION AND REPAIR

- Check speed sensor pole piece for presence of foreign materials; remove any dirty, etc.
- Check the pole piece for damage, and replace speed sensor if necessary.
- Check speed sensor cable for short or open, and replace with a new one if necessary. To check for cable short or open, bend or stretch the cable while checking for continuity.
- Check the sensor ring for damage including tooth chipping, and if damaged replace the axle shaft assembly. Refer to removal of the sensor ring in Section 4B "Rear Axle".

INSTALLATION

5. **Speed sensor**
   - Take care not to hit the speed sensor pole piece during installation.
4. **Sensor fixing bolt**
   - Tighten the fixing bolt to the specified torque.

Torque	N·m (lb·ft)	18 (13)

3. **Sensor cable fixing bolt**
   - Tighten the fixing bolt to the specified torque.

Torque	N·m (lb·ft)	24 (18)

   - Confirm that the cable is not twisted when connecting the speed sensor cable.
2. **Clip**
1. **Speed sensor connector**

SPECIAL TOOLS

ILLUSTRATION	TOOL NO. TOOL NAME
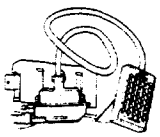	**J-35592** Pinout box
	J-35616 Connector test adapter kit
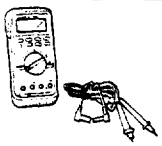	**J-39200** High impedance multimeter
	J-38770 Tech 1 Scan Tool

ILLUSTRATION	TOOL NO. TOOL NAME
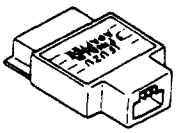	**TA02279-B** 3Pin Adapter
	TK02500B-1 Cartridge
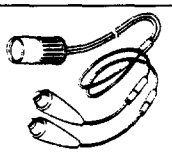	**J-38770-4** Battery Cable Adapter

MEMO

SECTION 5C

PARKING BRAKES

CAUTION:
All brake attaching fasteners are an important attaching part in that they could affect performance of vital parts and systems, and/or could result in major repair expense. They must be replaced with one of the same part number or with and equivalent part if replacement becomes necessary. Do not use replacement parts of lesser quality or substitute design. Torque values must be used as specified during reassembly to assure proper retention of these parts.

CONTENTS

General Description 5C-1
Operation 5C-2
On-Vehicle Service 5C-3
Parking Brake Lever Replacement 5C-3
Parking Brake Front Cable 5C-4
Parking Brake Rear Cable 5C-5
Parking Brake Lining Inspection 5C-6
Parking Brake Rotor (Drum) Inspection ... 5C-6
Parking Brake Adjustment 5C-7
Main Data and Specifications 5C-8
General Specifications 5C-8
Torque Specifications 5C-8

GENERAL DESCRIPTION

Pulling up the parking brake lever by hand will set the parking brake. Once pulled up, the lever is held by a ratchet type lock until it is released. The position of the lever is transmitted through cable/lever systems to the rear wheels. These parts are designed to obtain sufficient braking force when parking on slopes. When the parking brake is set, or when the ignition SW is in the "ON" position, the brake warning light illuminates.

The rear wheel parking brake is a duo-servo brake (mechanical inside expansion type) built in to the rear disc brake. Parking brake adjustment is made through the adjusting hole (bored through back plate). Parking brake lever stroke should be adjusted to 6 or 7 notches. Refer to "Parking Brake Adjustment" in this Section.

OPERATION (Fig. 5C-1)

When pulled in the direction "A", the parking lever presses the secondary shoe against the brake drum using the lever/shoe joint "B" as a fulcrum and pushes the strut in the direction "C". The strut, in turn, presses the primary shoe against the brake drum. Counter force "D" to the primary shoe is transmitted again to the secondary shoe through the fulcrum "B". The secondary shoe contacts the drum thereby producing braking effect. Clearance which may result from worn parking brake shoe lining can be adjusted by turning the adjusting screw. Refer to "Parking Brake Adjustment" in this Section.

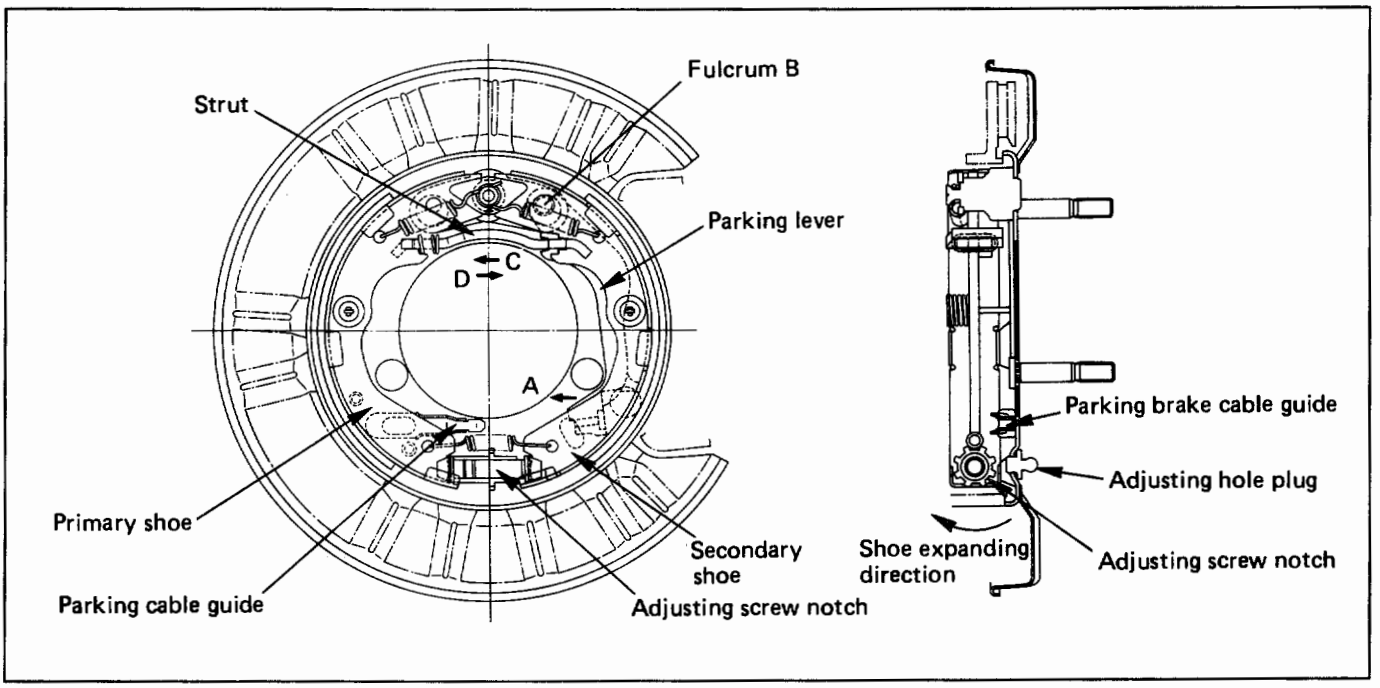

Fig. 5C-1

ON-VEHICLE SERVICE

PARKING BRAKE LEVER REPLACEMENT

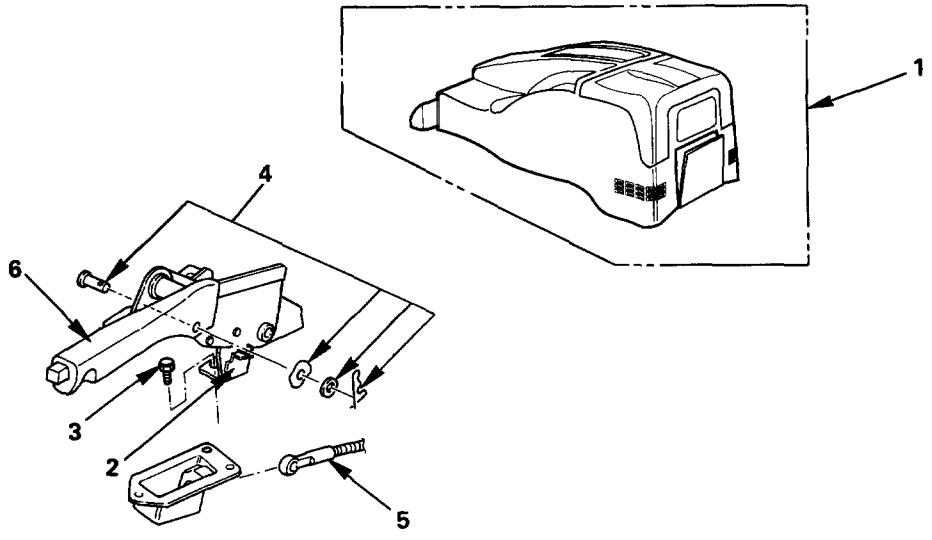

Removal steps
1. Center console
2. Switch connector
3. Bolt
4. Pin and snap pin
5. Parking brake front cable
6. Parking brake lever

Installation steps
To install, follow the removal steps in the reverse order.

Fig. 5C-2

REMOVAL

1. **Center console**
   - Refer to Section 10 "Body".
2. **Switch connector**
3. **Bolt**
4. **Pin and snap pin**
5. **Parking brake front cable**
   - Loosen the parking brake front cable at the floor connector.
   - Disconnect the parking brake front cable from the parking brake lever (Fig. 5C-2).
6. **Parking brake lever**

INSTALLATION

6. **Parking brake lever**
5. **Parking brake front cable**
4. **Pin and snap pin**
   - Apply grease (BESCO L-2 or equivalent) to the pin before installing.
3. **Bolt**
   - Tighten the parking brake lever fixing bolt to the specified torque.

Torque	N·m (lb·in)	13 (113)

2. **Switch connector**
1. **Center console**
   - Refer to Section 10 "Body".
   - To adjust the parking brake lever, see "Parking Brake Adjustment" in this Section.

PARKING BRAKE FRONT CABLE

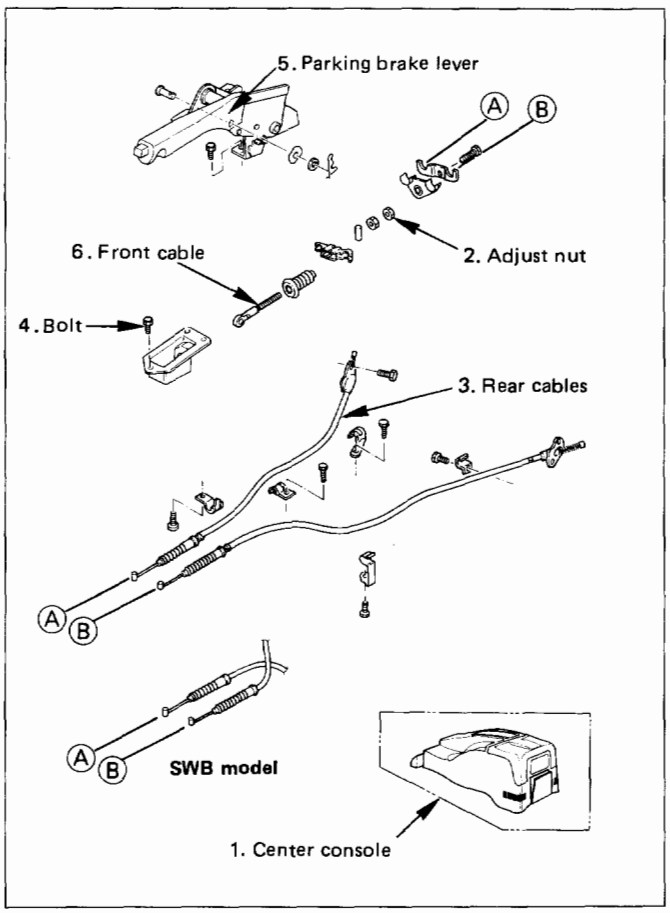

Fig. 5C-3

REMOVAL

1. **Center console**
   - Refer to Section 10 "Body".
2. **Adjust nut**
   - Loosen the adjust nut of the rear cables.
3. **Rear cables**
   - Remove the rear cables from the brackets and disconnect the cables from the front cable.
4. **Bolt**
5. **Parking brake lever**
   - Disconnect the front cable from the lever joint. (Refer to "Parking Brake Lever Replacement" on the previous page.)
6. **Front cable**

INSTALLATION

6. **Front cable**
5. **Parking brake lever**
4. **Bolt**

Torque	N·m (lb·in)	6 (52)

3. **Rear cables**
   - Apply grease (BESCO L-2 or equivalent) to the connecting portion of the rear cable and equalizer.
2. **Adjust nut**
   - Tighten the adjust nut to the specified torque.

Torque	N·m (lb·in)	6 (52)

   - To adjust the parking brake, refer to "Parking Brake Adjustment" in this Section.
1. **Center console**

PARKING BRAKE REAR CABLE

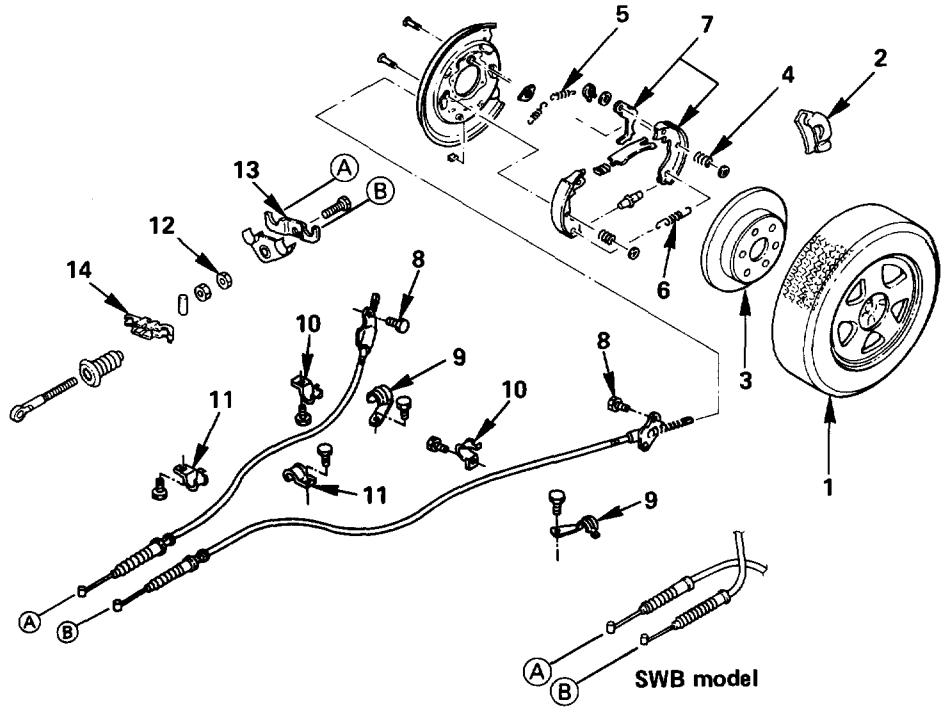

Removal steps
1. Rear wheels
2. Caliper assembly
3. Rotor (Drum)
4. Holding spring
5. Return spring; upper
6. Return spring; lower
7. Shoe assembly
8. Cable fixing bolt
9. Clip
10. Clip
11. Clip
12. Adjust nut
13. Back plate
14. Equalizer
15. Rear cable

Installation steps
To install, follow the removal steps in the reverse order.

Fig. 5C-4

REMOVAL

1. **Rear wheels**
2. **Caliper assembly**
   - Remove 2 bolts to remove the caliper assembly from the support bracket. (Refer to "Rear Disc Brakes" in Section 5A2). Temporarily hang the caliper with wire to avoid stretching the brake hose.
3. **Rotor (Drum)**
4. **Holding spring**
5. **Return spring; upper**
6. **Return spring; lower**
7. **Shoe assembly**
   - Remove the brake shoe assembly. Then remove the parking brake cable from the parking brake lever. (Fig. 5C-5)

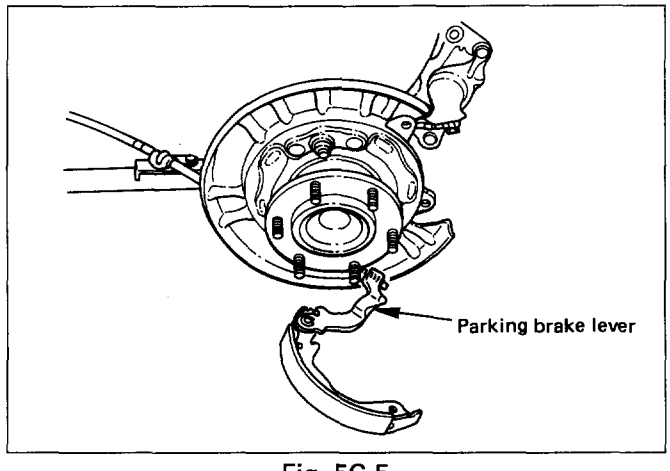

Fig. 5C-5

8. **Cable fixing bolt**
9. **Clip**
10. **Clip**
11. **Clip**
12. **Adjust nut**
13. **Back plate**
14. **Equalizer**
15. **Rear cable**

INSTALLATION

15. Rear cable

- Apply grease (BESCO L-2 or equivalent) to the connecting portion of the rear cable and equalizer.

14. Equalizer

13. Back plate

12. Adjust nut

- Tighten the adjust nut to the specified torque.

Torque	N·m (lb·in)	6 (52)

- To adjust the parking brake, refer to "Parking Brake Adjustment" in this Section.

11,10, 9. Clip

Torque	N·m (lb·in)	6 (52)

8. Cable fixing bolt

- Tighten the cable fixing bolt to the specified torque.

Torque	N·m (lb·in)	6 (52)

7. Shoe assembly

- After installation of the shoe and cable assembly, apply special grease (included in the repair kit) to the following portions indicated in the figure (Fig. 5C-6)

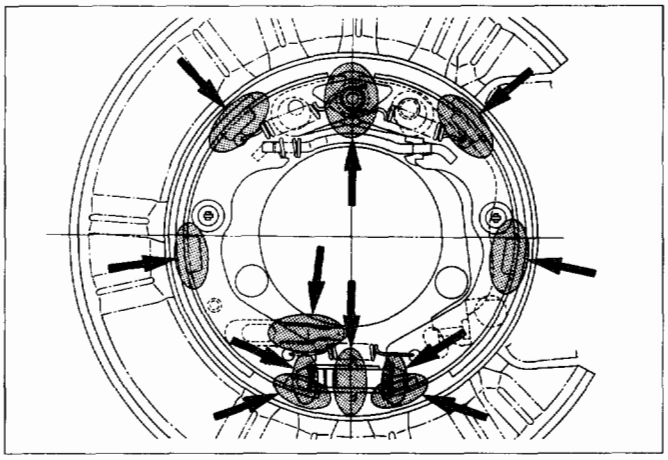

Fig. 5C-6

6. Return spring; lower

5. Return spring; upper

- The parking brake lever side (secondary side) return spring must be installed on the outer side of the primary side return spring (Fig. 5C-7).

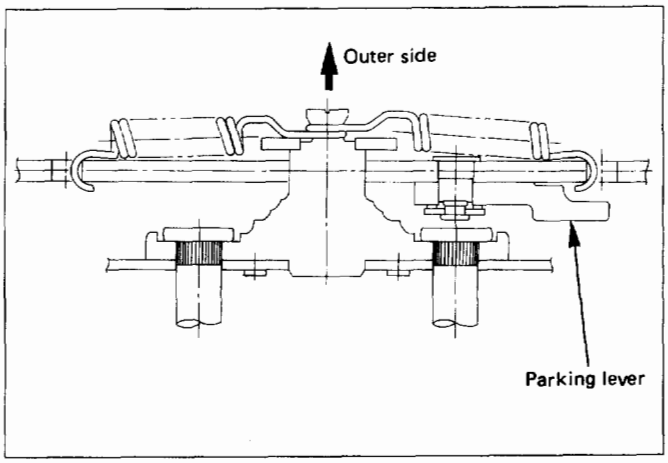

Fig. 5C-7

4. Holding spring

3. Rotor (Drum)

2. Caliper assembly

1. Rear wheels

PARKING BRAKE LINING INSPECTION (Fig. 5C-8)

Check the shoe assemblies for wear by removing the brake drum rotor.
Replace the shoe assemblies, if the lining thickness is less than 1.0 mm (0.039 in).

Minimum limit	mm (in)	1.0 (0.039)

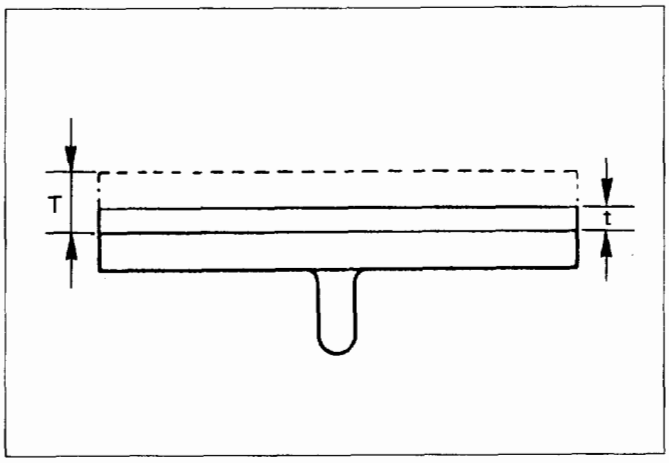

Fig. 5C-8

PARKING BRAKE ROTOR (DRUM) INSPECTION

Refer to "Rear Disc Brakes" in Section 5A2 for inspection procedure of the rotor (drum).

PARKING BRAKE ADJUSTMENT

1. Adjustment of parking brake assembly

- Prior to lever stroke adjustment, adjust the rear brake shoe/rotor (drum) gap. Perform this procedure by loosening the adjust nut of the equalizer.

a) Remove the adjusting hole plug (rubber) and turn the shoe adjusting screw downward with a small screwdriver so that shoes will expand until they get into close touch with the rotor. (Turn down the adjusting screw notch by notch until the rotor does not turn.)

b) Turn the adjusting screw in the opposite direction (upward) until the rotor can be turned lightly. Standard number of notches to turn upward: 7 or 8.
Turn the rotor and make sure that there is no brake dragging.

2. Adjustment of parking brake cable

a) Turn the equalizer nut so that the parking brake lever travels 6 or 7 notches when pulled up with a force of 30 kg (66 lb).

b) Make sure there is no brake dragging and tighten the cable lock nut.

	Torque N·m (lb·in)	6 (52)

3. Break-in of parking brake shoe

- When poor braking effect possibly resulting from insufficient break-in is felt, or just after replacement of parking brake shoe, be sure to conduct break-in by driving vehicle as follows:

a) Forward 50 km/h (30 mph) x 400 m (About 30 seconds) with a lever pull force of 15 kg (33 lb), and

b) Backward 10 km/h (6 mph) x 50 m (18 seconds) with a lever pull force of 15 kg (33 lb).

NOTE:
Break-in procedure must be performed under the safety conditions and traffic rules.

- If braking effect still remains poor after the above break-in, wait for some time until parking brake shoe cools down and repeat the procedures a) and b) noted above.
- On completion of break-in, inspect parking brake lever stroke, and if the lever does not come within the specified number of notches when pulled up, readjust.
- Excessive brake-in may cause premature wear of the parking brake lining.

MAIN DATA AND SPECIFICATIONS

GENERAL SPECIFICATIONS

Rear parking brake		
Type		Duo-servo
Lining dimension	cm^2 (in^2)	121.2 (18.79)
Adjusting method		Manual adjusting
Rotor (drum) inside diameter	mm (in)	210 (8.27)
Parking brake lever stroke		6 to 7 notches
		When pulled with a force of 30 kg (66 lb)

TORQUE SPECIFICATIONS

N·m (lb·in)

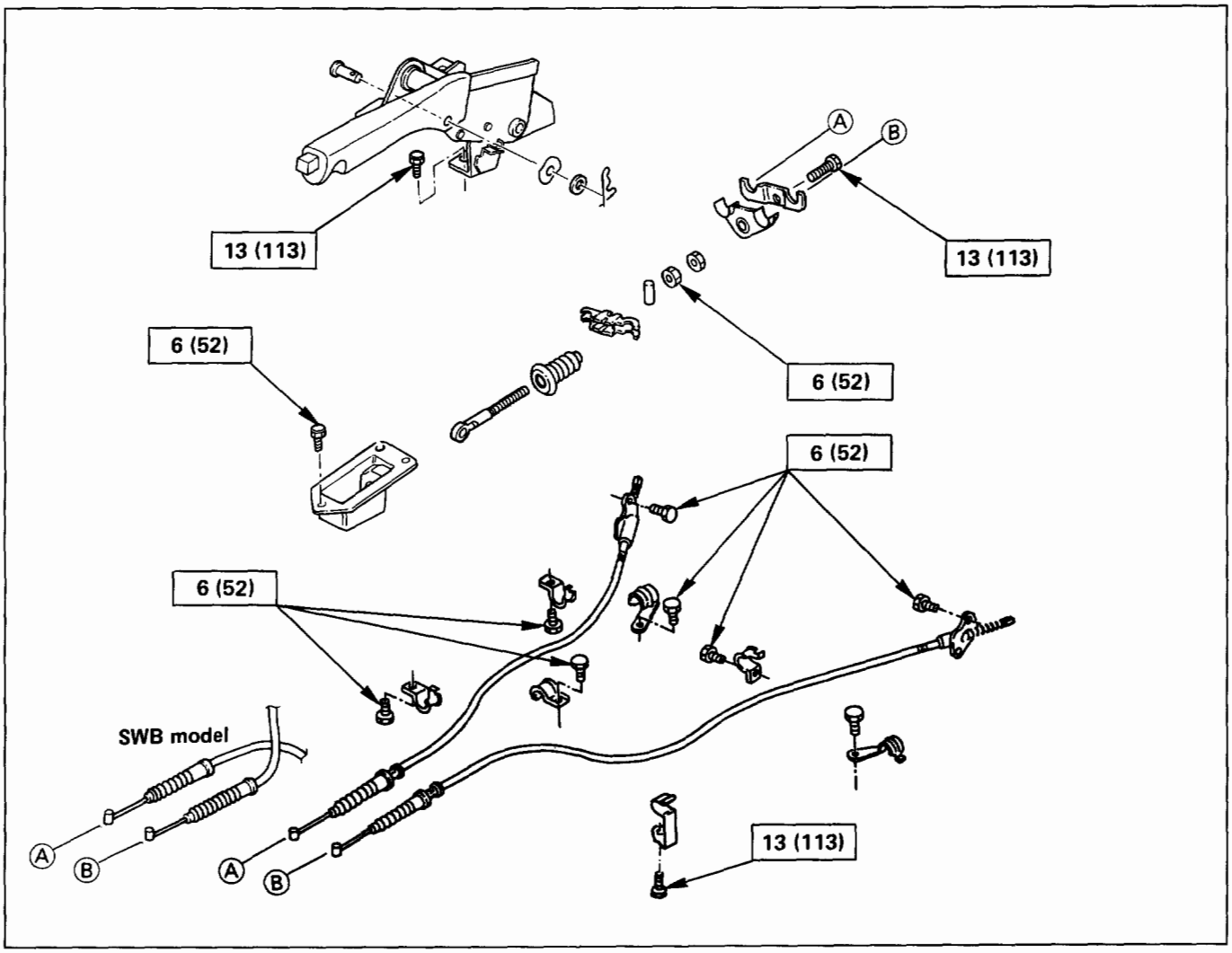

Fig. 5C-9

ENGINE

CONTENTS

Engine General Information ..... Section 6
General Engine Mechanical ..... Section 6A
3.2L V6 Engine ..... Section 6A1
Engine Cooling ..... Section 6B
Engine Fuel ..... Section 6C
Engine Electrical ..... Section 6D
Driveability and Emissions ..... Section 6E2
Engine Exhaust ..... Section 6F

SECTION 6

ENGINE GENERAL INFORMATION

CONTENTS

Description of Engine Section ..... 6—1
General Description ..... 6—2
Engine Diagnosis ..... 6—2

DESCRIPTION OF ENGINE SECTION

SECTION 6—ENGINE GENERAL INFORMATION

General description

Engine cleanliness and care, and general information on engine service are covered in this section.

Engine diagnosis

This section covers the components of the fuel, ignition, and mechanical systems that could cause a particular complaint, and then outlines repairs in a logical sequence.

SECTION 6A—ENGINE MECHANICAL

This section contains information on the mechanical parts of the engine, such as cylinder block, cylinder head, crankshaft, pistons, valve train, camshaft, and engine lubrication.

Overhaul procedures, removal and replacement procedures, and specifications are also covered. Specific subsections are:

6A—GENERAL;
Disassembly and reassembly procedures, inspection and repair procedures off the vehicle.

6A1—3.2L V6 ENGINE;
Removal and replacement procedures on the vehicle.

SECTION 6B—ENGINE COOLING

Engine cooling system components such as radiator, engine coolant pump, thermostat, and cooling fan, are covered in this section.

SECTION 6C—ENGINE FUEL

This section contains information on all the parts of the fuel system except the fuel injectors, or throttle body unit itself. Items covered are: fuel tank, fuel pump, fuel filter, and fuel lines. Specific sections are used for each fuel system type:

Port Injection fuel rail and injectors will be found in Section 6E2.

SECTION 6D—ENGINE ELECTRICAL

Items covered in this section are battery, generator, starter, ignition coil, spark plugs and wires.

Ignition system diagnosis will be found in Section 6E2 as a "C4" chart.

Specific sections are:

6D1 — Battery
6D2 — Cranking System
6D3 — Charging System
6D4 — Ignition System

SECTION 6E—DRIVEABILITY AND EMISSIONS

This section covers emission control systems general information, and diagnostic procedures which will lead to repairing performance and driveability related problems. Emission components are covered, as well as removal and replacement procedures.
Instructions on use of special tools are also given.

SECTION 6F—ENGINE EXHAUST

This section has information on all exhaust system parts, such as tailpipes, mufflers, and the catalytic converter.

GENERAL DESCRIPTION

ENGINE CLEANLINESS AND CARE

An automobile engine is a combination of many machined, honed, polished and lapped surfaces with tolerances that are measured in the thousandths of a millimeter (ten thousandths of an inch). Accordingly, when any internal engine parts are serviced, care and cleanliness are important. Throughout this section, it should be understood that proper cleaning and protection of machined surfaces and friction areas is part of the repair procedure. This is considered standard shop practice even if not specifically stated.

- A liberal coating of engine oil should be applied to all friction areas during assembly to protect and lubricate the surfaces on initial operation.
- Whenever valve train components, pistons, piston rings, connecting rods, rod bearings, and crankshaft journal bearings are removed for service, they should be retained in order.
- At the time of installation, they should be installed in the same locations and with the same mating surfaces as when removed.
- Battery cables should be disconnected before any major work is performed on the engine. Failure to disconnect cables may result in damage to wire harness or other electrical parts.
- The six cylinders of this engine are identified by numbers; Right side cylinders 1, 3 and 5, Left side cylinders 2, 4 and 6, as counted from crankshaft pulley side to flywheel side.

GENERAL INFORMATION ON ENGINE SERVICE

The following information on engine service should be noted carefully, as it is important in preventing damage and contributing to reliable engine performance.

- When raising or supporting the engine for any reason, do not use a jack under the oil pan. Due to the small clearance between the oil pan and the oil pump strainer, jacking against the oil pan may cause damage to the oil pick-up unit.
- The 12-volt electrical system is capable of damaging circuits. When performing any work where electrical terminals could possibly be grounded, the ground cable of the battery should be disconnected at the battery.
- Any time the intake air duct or air cleaner is removed, the intake opening should be covered. This will protect against accidental entrance of foreign material into the cylinder which could cause extensive damage when the engine is started.

ENGINE DIAGNOSIS

CONTENTS

Hard Starting 6– 3
Engine Compression Test Procedure 6– 4
Rough Engine Idling or Engine Stalling ... 6– 5
Rough Engine Running 6– 6
Hesitation 6– 7
Engine Lacks Power 6– 8
Engine Noisy 6–10
Abnormal Combustion 6–12
Engine Oil Consumption Excessive 6–13
Fuel Consumption Excessive 6–14
Oil Problems 6–14
Malfunction Indicator Lamp 6–15
Engine Oil Pressure Check 6–16
Inspection of Hydraulic Lash Adjuster 6–17

HARD STARTING

1. Starting motor does not turn over
Trouble shooting procedure
Turn on headlights and starter switch.

Condition	Possible cause	Correction
Headlights go out or dim considerably	Battery run down or under charged	Recharge or replace battery
	Terminals poorly connected	Clean battery posts and terminals and connect properly
	Starting motor coil circuit shorted	Overhaul or replace
	Starting motor defective	
Headlights stay bright	Starting motor circuit open	Refer to Section 6D
	Starting motor coil open	Replace

2. Ignition trouble — Starting motor turns over but engine does not start
Spark Test
Disconnect a high tension cable from any spark plug. Connect the spark plug tester J-26792 (ST-125), start the engine, and check if a spark is generated in the spark plug tester.
Before starting the engine, make sure that the spark plug tester is properly grounded. To avoid electrical shock, do not touch the high tension cable while the engine is running.

Condition	Possible cause	Correction
Spark jumps across gap	Spark plug defective	Clean, adjust spark gap or replace
	Ignition timing incorrect	Refer to Section 6E2
	Fuel not reaching fuel injector(s) or engine	Refer to item 3 (Trouble in fuel system)
	Valve timing incorrect	Adjust
	Engine lacks compression	Refer to item 4 (Engine lacks compression)
No sparking takes place	Spark plug wire disconnected or broken	Connect properly or replace
	Electronic Ignition System with module	Replace
	Poor connections in engine harness	Correct
	Engine Control Module cable disconnected or defective	Correct or replace

3. Trouble in fuel system

Condition	Possible cause	Correction
Starting motor turns over and spark occurs but engine does not start.	Fuel tank empty	Fill
	Water in fuel system	Clean
	Fuel filter clogged	Replace filter
	Fuel pipe clogged	Clean or replace
	Fuel pump defective	Replace
	Fuel pump circuit open	Correct or replace
	Evaporative Emission Control System circuit clogged	Correct or replace
	Multiport Fuel Injection System faulty	Refer to "Electronic Fuel Injection" section

HARD STARTING (Cont'd)		
4. Engine lacks compression		
Condition	**Possible cause**	**Correction**
	Spark plug loosely fitted or spark plug gasket defective	Tighten to specified torque or replace gasket
	Valve timing incorrect	Adjust
	Cylinder head gasket defective	Replace gasket
	Valve incorrectly seated	Lap valve
	Valve stem seized	Replace valve and valve guide
	Valve spring weakened	Replace
	Cylinder or piston rings worn	Overhaul engine
	Piston ring seized	Overhaul engine.

ENGINE COMPRESSION TEST PROCEDURE

1. Start and run the engine until the engine reaches normal operating temperature.
2. Turn the engine off.
3. Remove all the spark plugs.
4. Remove ignition coil fuse (15A) and disable the ignition system.
5. Remove the fuel pump relay from the relay and fuse box.
6. Engage the starter and check that the cranking speed is approximately 300 rpm.
7. Install cylinder compression gauge into spark plug hole.
8. With the throttle valve opened fully, keep the starter engaged until the compression gage needle reaches the maximum level. Note the reading.
9. Repeat the test with each cylinder.

If the compression pressure obtained falls below the limit, engine overhaul is necessary.
Limit; 883 kPa (128 psi)

ROUGH ENGINE IDLING OR ENGINE STALLING

Condition	Possible cause	Correction
Trouble in fuel injection system	Idle air control valve defective	Replace
	Throttle shutting off incomplete	Correct or replace
	Throttle position sensor circuit open or shorted	Correct or replace
	Fuel injector circuits open or shorted	Correct or replace
	Fuel injectors damaged	Replace
	Fuel pump relay defective	Replace
	Manifold Absolute Pressure Sensor cable disconnected or broken	Correct or replace
	Manifold Absolute Pressure Sensor defective	Replace
	Engine Coolant Temperature Sensor cable disconnected or broken	Correct or replace
	Engine Coolant Temperature Sensor defective	Replace
	Intake Air Temperature sensor cable disconnected or broken	Correct or replace
	Intake Air Temperature sensor defective	Replace
	Knock Sensor (KS) circuits open or shorted (DOHC only)	Correct or replace
	KS defective (DOHC only)	Replace
	KS Module circuits open or ground (DOHC only)	Correct or replace
	KS Module defective (DOHC only)	Replace
	Vehicle Speed Sensor circuit open or shorted	Correct or replace
	Vehicle Speed Sensor defective	Replace
Trouble in emission control system	Engine Control Module defective	Replace
	Exhaust Gas Recirculation Valve faulty	Replace
	Back Pressure Transducer defective	Replace
	Vacuum Switch Valve (VSV); EGR circuit open	Correct
	VSV; EGR defective	Replace
	Canister purge VSV circuit open	Correct
	VSV; canister circuit open	Correct
	VSV; canister defective	Replace
	Evaporative Emission Canister Purge control valve defective	Replace
	Trouble in ignition system	Refer to Hard Start Troubleshooting Guide
Others	Engine lacks compression	Refer to Hard Start Troubleshooting Guide
	Valve incorrectly seated	Lap valve
	Air Cleaner Filter clogged	Replace filter element
	Valve timing incorrect	Readjust
	Idle air control valve broken	Replace
	Fast idle solenoid defective	Replace
	Positive Crankcase Ventilation valve defective or clogged	Replace

ROUGH ENGINE RUNNING

Complaint	Faulty parts	Possible cause	Correction
Engine misfires regularly	Ignition coil high-tension cables	Coil layer shorted	Replace
		Primary lead wire broken leakage due to defective insulator	Correct
	Spark plugs	Fouling	Clean or install hotter type plug
		Insulator nose leaking	Replace
	Fuel injectors	Fuel injector(s) defective	Replace
		Dropping register defective	Replace
	Engine Control Module	Faulty	Replace
Engine knocks regularly	Spark plugs	Spark plugs running too hot	Install colder type spark plugs
	Engine Control Module	Faulty	Replace
Engine lacks power	Spark plugs	Fouled	Clean
	Multiport Fuel Injection system	Fuel injectors defective	Replace
		Manifold Absolute Pressure (MAP) Sensor or Manifold Absolute Pressure Sensor circuit defective	Correct or replace
		Engine Coolant Temperature Sensor or Engine Coolant Temperature Sensor circuit dcefective	Correct or replace
		Engine Control Module faulty	Replace
		Intake Air Temperature Sensor or Intake Air Temperature Sensor circuit defective	Correct or replace
		Throttle Position Sensor or Throttle Position Sensor circuit defective	Correct or replace
		Knock Sensor or Knock Sensor circuits defective (DOHC only)	Correct or replace
		Knock Sensor Module or Knock Sensor Module circuits defective (DOHC only)	Correct or replace

HESITATION

Condition	Possible cause	Correction
Hesitation on acceleration	Throttle Position Sensor adjustment incorrect	Replace throttle valve assembly
	Throttle Position Sensor circuit open or shorted	Correct or replace
	Excessive play in accelerator linkage	Adjust or replace
	Manifold Absolute Pressure (MAP) Sensor circuit open or shorted	Correct or replace
	MAP Sensor defective	Replace
	Intake Air Temperature (IAT) Sensor circuit open or shorted	Correct or replace
	Knock Sensor (KS) Circuit open or shorted (DOHC only)	Correct or replace
	KS defective (DOHC only)	Replace
	KS Module circuits open or shorted (DOHC only)	Correct or replace
	KS Module defective (DOHC only)	Replace
	IAT Sensor defective	Replace
Hesitation at high speeds	Fuel pressure too low	
	Fuel tank strainer clogged	Clean or replace
	Fuel pipe clogged	Clean or replace
	Fuel filter clogged	Replace
	Defective fuel pump system	Check and replace
	Fuel Pressure Control Valve leaking	Replace
	Fuel injector not working normally	
	Power supply or ground circuit for Multiport Fuel Injection System shorted or open	Check and correct or replace
	Distributor defective	Replace
	Cable of Multiport Fuel Injection System disconnected or defective	Correct or replace
	Engine Control Module defective	Replace
	Throttle Position Sensor circuit open or shorted	Correct or replace
	Throttle Position Sensor defective	Replace
	Engine Coolant Temperature Sensor circuit open or shorted	Correct or replace
	Engine Coolant Temperature Sensor defective	Replace
	MAP Sensor cable open or shorted	Correct or replace
	MAP Sensor defective	Replace
	IAT Sensor circuit open or shorted	Correct or replace
	IAT Sensor defective	Replace
	KS Circuit open or shorted (DOHC only)	Correct or replace
	KS defective (DOHC only)	Replace
	KS Module circuit open or shorted (DOHC only)	Correct or replace
	KS Module defective (DOHC only)	Replace
	Throttle valve not wide opened	Check and correct or replace
	Air Cleaner Filter clogged	Replace filter element
	Power supply voltage too low	Check and correct or replace

ENGINE LACKS POWER

Condition	Possible cause	Correction
Trouble in fuel system	Fuel Pressure Control Valve not working normally	Replace
	Fuel injector clogged	Clean or replace
	Fuel pipe clogged	Clean
	Fuel filter clogged or fouled	Replace
	Fuel pump drive circuit not working normally	Correct or replace
	Fuel tank not sufficiently breathing due to clogged Evaporative Emission Control System circuit	Clean or replace
	Water in fuel system	Clean
	Inferior quality fuel in fuel system	Use fuel of specified octane rating
	Engine Control Module supplied poor voltage	Correct circuit
	Throttle Position Sensor cable disconnected or broken	Correct or replace
	Throttle Position Sensor defective	Replace
	Manifold Absolute Pressure Sensor not working normally	Replace
	Intake Air Temperature Sensor not working normally	Replace
	Engine Coolant Temperature Sensor circuit open or shorted	Correct or replace
	Engine Coolant Temperature Sensor defective	Replace
	Engine Control Module defective	Replace
Trouble in intake or exhaust system	Air Cleaner Filter clogged	Replace filter element
	Trouble in Induction air control valve system (DOHC)	Correct or replace
	Air duct kinked or flattened	Correct or replace
Ignition failure		Refer to Hard Start Troubleshooting Guide
	Heat range of spark plug inadequate	Install spark plugs of adequate heat range
	Electronic Ignition System with module	Replace

ENGINE LACKS POWER (Cont'd)

Condition	Possible cause	Correction
Engine overheating	Level of Engine Coolant too low	Replenish
	Thermo switch or fan motor defective	Replace
	Thermostat defective	Replace
	Engine Coolant pump defective	Correct or replace
	Radiator clogged	Clean or replace
	Radiator filler cap defective	Replace
	Level of oil in engine crankcase too low or wrong oil engine	Change or replenish
	Resistance in exhaust system increased	Clean exhaust system or replace defective parts
	Throttle Position Sensor adjustment incorrect	Adjust Wide Open Throttle switch setting
	Throttle Position Sensor circuit open or shorted	Correct or replace
	Cylinder head gasket damaged	Replace
Engine overcooling	Radiator overcooling	Install cover in front of radiator
	Thermostat defective	Replace (Use a thermostat set to open at 82°C (180°F))
Engine lacks compression		Refer to Hard Start
Others	Tire inflation pressure abnormal	Adjust to recommend pressures
	Brake drag	Adjust
	Clutch slipping	Adjust or replace
	Level of oil in engine crankcase too high	Correct level of engine oil
	Exhaust Gas Recirculation Valve defective	Replace
	Back pressure transducer defective	Replace

ENGINE NOISY

Abnormal engine noise often consists of various noises originating in rotating parts, sliding parts and other moving parts of the engine. It is, therefore, advisable to locate the source of noise systematically.

Condition	Possible cause	Correction
Noise from crank journals or from crank bearings (Faulty crank journals and crank bearings usually make dull noise that becomes more evident when accelerating)	Oil clearance increased due to worn crank journals or crank bearings	Replace crank bearings and crankshaft or regrind crankshaft and install the over size bearing
	Crankshaft out of round	Replace crank bearings and crankshaft or regrind crankshaft and install the over size bearing
	Crank bearing seized	Replace crank bearings and crankshaft or regrind crankshaft and install the over size bearing

Troubleshooting Procedure
Short out each spark plug in sequence using insulated sparkplug wire removers. Locate cylinder with defective bearing by listening for abnormal noise that stops when spark plug is shorted out.

Condition	Possible cause	Correction
Noise from connecting-rods or from connecting-rod bearings (Faulty connecting-rods or connecting-rod bearings usually make an abnormal noise slightly higher than the crank bearing noise, which becomes more evident when engine is accelerated)	Bearing or crankshaft pin worn	Replace connecting-rod bearings and crankshaft or regrind-crankshaft and install the over size bearing
	Crankpin out of round	Replace connecting-rod bearings and crankshaft or regrind-crankshaft and install the over size bearing
	Connecting-rod bent	Correct or replace
	Connecting-rod bearing seized	Replace connecting-rod bearings and crankshaft or regrind-crankshaft and install the over size bearing

Troubleshooting Procedure
Abnormal noise stops when the spark plug on the cylinder with defective part is shorted out.

Condition	Possible cause	Correction
Piston and cylinder (Faulty piston or cylinder usually makes a combined mechanical thumping noise which increases when engine is suddenly accelerated but diminishes gradually as the engine warms up)	Piston clearance increased due to cylinder wear	Replace piston and cylinder body
	Piston seized	Replace piston and cylinder body
	Piston ring broken	Replace piston and cylinder body
	Piston defective	Replace pistons and others

Troubleshooting Procedure
Short out each spark plug and listen for change in engine noise.

Condition	Possible cause	Correction
Piston pin noise (Piston makes noise each time it goes up and down)	Piston pin or piston pin hole worn	Replace piston, piston pin and connecting-rod assy

Troubleshooting Procedure
The slapping sound stops when spark plug on bad cylinder is shorted out.

ENGINE NOISY (Cont'd)

Condition	Possible cause	Correction
Timing belt noise	Timing belt tension is incorrect	Replace pusher or adjust the ajust pulley or replace timing belt
	Tensioner bearing defective	Replace
	Timing belt defective	Replace
	Timing wheels defective	Replace
	Timing belt comes in contact with timing cover	Replace timing belt and timing cover
Valve noise	Valve clearance incorrect	Replace HLA
	Valve and valve guide seized	Replace valve and valve guide
	Valve spring broken	Replace
	Valve seat off-positioned	Correct
Crankshaft noise	Crankshaft end play excessive (noise occurs when clutch is engaged)	Replace thrust bearing
Engine knocking	Preignition due to use of spark plugs of inadequate heat range	Install Spark Plugs of adequate heat range
	Carbon deposits in combustion chambers	Clean
	Fuel too low in octane rating	Replace fuel
	Wide Open Throttle enrichment system failure	Refer to Section 6E2
	Selection of transmission gear incorrect	Caution operator of incorrect gear selection
	Engine overheating	Refer to "Engine Lacks Power"
Others	Water pump defective	Replace
	Drive belt slipping	Adjust tension of drive belt or replace drive belt

ABNORMAL COMBUSTION

Condition	Possible cause	Correction
Trouble in fuel injection system	Fuel pressure control valve defective	Replace
	Fuel filter clogged	Replace
	Fuel pump clogged	Clean or replace
	Fuel tank or fuel pipe clogged	Clean or replace
	Fuel injector clogged	Clean or replace
	Fuel pump relay defective	Replace
	Power supply cable for fuel pump loosely connected or defective	Reconnect, correct or replace
	Manifold Absolute Pressure Sensor circuit open or shorted	Correct or replace
	Manifold Absolute Pressure Sensor defective	Replace
	Engine Coolant Temperature (ECT) Sensor circuit open or shorted	Correct or replace
	ECT Sensor defective	Replace
	Throttle Position Sensor adjustment incorrect	Replace throttle valve
	Throttle Position Sensor defective	Replace
	Throttle Position Sensor connector loosely connected	Reconnect
	Vehicle Speed Sensor cable loosely connected or defective	Correct or replace
	Vehicle Speed Sensor loosely fixed	Fix tightly
	Vehicle Speed Sensor in wrong contact or defective	Replace
	Engine Control Module cable loosely connected or defective	Correct or replace
Trouble in emission control system	Heated Oxygen Sensor circuit open	Correct or replace
	Heated Oxygen Sensor defective	Replace
	Vacuum Switch Valve (VSV); Exhaust Gas Recirculation defective	Replace
	Signal vacuum hose loosely fitted or defective	Correct or replace
	Exhaust Gas Recirculation Valve defective	Replace
	Back Pressure Transducer defective	Replace
	ECT Sensor circuit open or shorted	Correct or replace
	ECT Sensor defective	Replace
	Pressure Control Valve (PCV) and hose clogged	Correct or replace
	Evaporator system	Refer to Section 6E
Trouble in ignition system		Refer to "Engine Lacks Power"
Trouble in cylinder head parts	Carbon deposits in combustion chamber	Remove carbon
	Carbon deposit on valve, valve seat and valve guide	Remove carbon

ENGINE OIL CONSUMPTION EXCESSIVE

Condition	Possible cause	Correction
Oil leaking	Oil pan drain plug loose	Retighten or replace gasket
	Oil pan setting bolts loosened	Retighten
	Oil pan gasket broken	Replace gasket
	Front cover retaining bolts loose or gasket broken	Retighten or replace gasket
	Head cover retaining bolts loose or gasket broken	Retighten or replace gasket
	Oil cooler adapter cracked	Replace
	Oil cooler center bolt loose	Retighten
	Oil cooler O-ring broken	Replace
	Oil cooler piping loose or broken	Retighten or replace
	Oil filter adapter cracked	Replace
	Oil filter attachings bolt loose or rubber gasket broken	Retighten or replace oil filter
	Oil cooler broken	Replace
	Crankshaft front or rear oil seal defective	Replace oil seal
	Oil pressure unit loose or broken	Retighten or replace
	Blow-by gas hose broken	Replace hose
	Positive Crankcase Ventilation Valve clogged	Clean
	Engine/Transmisison coupling area	Replace oil seal
Oil leaking into combustion chambers due to poor seal in valve system	Valve stem oil seal defective	Replace
	Valve stem or valve guide worn	Replace valve and valve guide
Oil leaking into combustion chambers due to poor seal in cylinder parts	Cylinders and pistons worn excessively	Rebore cylinder and replace pistons and others
	Piston ring gaps incorrectly positioned	Correct
	Piston rings set with wrong side up	Correct
	Piston ring sticking	Rebore cylinder and replace pistons and others
	Piston rings and ring grooves worn	Replace pistons and others
	Return ports in oil rings clogged	Clean piston and replace rings
Crank case ventilation, Positive Crankcase Ventilation System malfunctioning	Positive Crankcase Ventilation Valve clogged	Clean
Others	Improper oil viscosity	Use oil of recommended S.A.E. viscosity
	Continuous high speed driving and/or servere usage such as trailer towing	Continuous high speed operation and/or severe usage will normally cause increased oil consumption

FUEL CONSUMPTION EXCESSIVE

Condition	Possible cause	Correction
Trouble in fuel system	Mixture too rich or too lean due to trouble in fuel injection system	Refer to "Abnormal Combustion"
	Fuel cut function does not act	Refer to "Abnormal Combustion"
Trouble in ignition system	Misfiring or abnormal combustion due to trouble in ignition system	Refer to Hard Start or Abnormal Combustion Troubleshooting Guide
Others	Engine idle speed too high	Reset Idle Air Control Valve
	Returning of accelerator control sluggish	Correct
	Fuel system leakage	Correct or replace
	Clutch slipping	Correct
	Brake drag	Correct
	Selection of transmission gear incorrect	Caution operator of incorrect gear selection
	Excessive Exhaust Gas Recirculation flow due to trouble in Exhaust Gas Recirculation system	Refer to Abnormal Combustion

OIL PROBLEMS

Condition	Possible cause	Correction
Oil pressure too low	Wrong oil in use	Replace with correct engine oil
	Relief valve sticking	Replace
	Oil pump not operating properly	Correct or replace
	Oil pump strainer clogged	Clean or replace strainer
	Oil pump worn	Replace
	Oil pressure gauge defective	Correct or replace
	Crankshaft bearing or connecting-rod bearing worn	Replace
Oil contamination	Wrong oil in use	Replace with new engine oil
	Oil filter clogged	Replace oil filter
	Cylinder head gasket damage	Replace gasket
	Burned gases leaking	Replace piston and piston rings or rebore cylinders
Oil not reaching valve system	Oil passage in cylinder head or cylinder body clogged	Clean or correct

MALFUNCTION INDICATOR LAMP

The instrument panel "CHECK ENGINE" Malfunction Indicator Lamp (MIL) illuminates by self diagnostic system when the system checks the bulb at the starting of engine, or senses malfunctions.

Complaint	Faulty parts	Possible cause	Correction
"CHECK ENGINE" MIL does not illuminate at the starting of engine		Bulb defective	Replace
		MIL circuit open	Correct or replace
		Command signal circuit to operate self diagnostic system shorted	Correct or replace
		Engine Control Module (ECM) cable loosely connected, disconnected or defective	Correct or replace
		ECM defective	Replace
"CHECK ENGINE" MIL illuminates, and stays on	Heated Oxygen Sensor	Deterioration of internal element	Replace
		Connector terminal improper contact	Reconnect properly
		Lead wire shorted	Correct
		Circuit open	Correct or replace
	Engine Coolant Temperature Sensor	Deterioration of internal element	Replace
		Connector terminal improper contact	Reconnect properly
		Lead wire shorted	Correct
		Circuit open	Correct or replace
	Throttle Position Sensor	Open or shorted circuits	Correct or replace
	Crankshaft Position Sensor	Deterioration of sensor	Replace
		Open or shorted circuit	Correct or replace
	Vehicle Speed Sensor	Open circuit	Correct or replace
	Manifold Absolute Pressure Sensor	Open or shorted circuit	Correct or replace
	Intake Air Temperature Sensor	Open or shorted circuit	Correct or replace
	Fuel Injector	Open or shorted circuit	Correct or replace
	ECM	Driver transistor defective	Replace ECM
		RAM*1 or ROM*2 malfunctioning	Replace ECM

Note: *1 — Random Access Memory
*2 — Read Only Memory

ENGINE OIL PRESSURE CHECK

1. Check for dirt, gasoline or water in the engine oil.
   a. Change the oil if dirt, gasoline, or water are present.
   b. Check the viscosity of the oil.
   c. Change the oil if the viscosity is outside the specified standard.
   d. Refer to the "Maintenance and Lubrication" section of this manual.
2. Check the engine oil level.
   The level should fall somewhere between the "ADD" and the "FULL" marks on the oil level dipstick.
   If the oil level does not reach the "ADD" mark on the oil level dipstick, engine oil must be added.
3. Remove the oil pressure unit.
4. Install an oil pressure gage.
5. Start the engine and allow the engine to reach normal operating temperature (About 80°C).
6. Measure the oil pressure.
   Oil pressure should be:
   392-550 kPa (56.9-80.4 psi)
   at 3000 rpm.
7. Stop the engine.
8. Remove the oil pressure gage.
9. Install the oil pressure unit.
10. Start the engine and check for leaks.

INSPECTION OF HYDRAULIC LASH ADJUSTER

- Should abnormal noise attributable to hydraulic lash adjuster trouble (entry of air) be heard immediately after engine start inspect as follows:

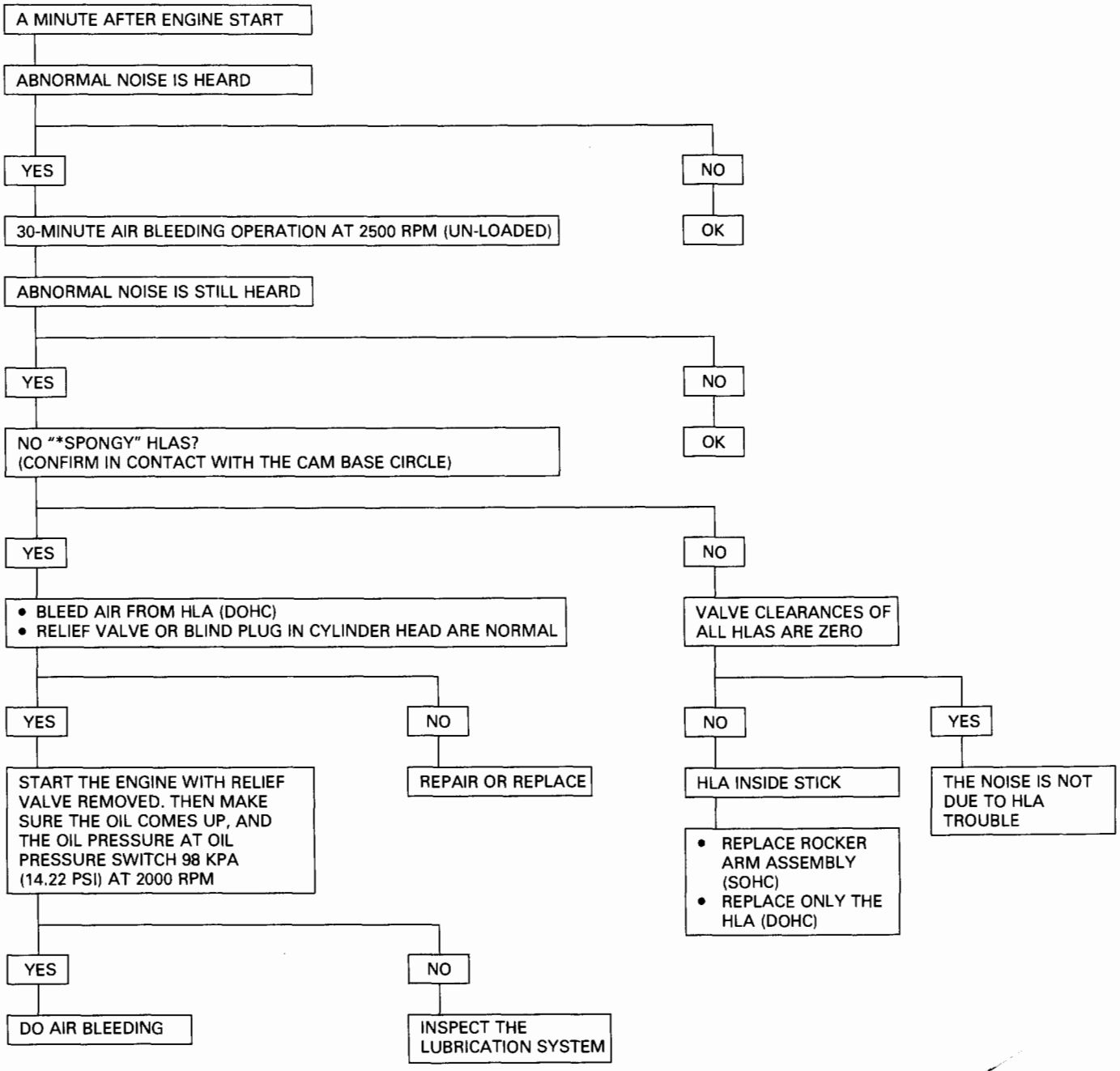

*SPONGY: THE STATUS WITH CAM BE EASILY COMPRESSED BY A FINGER'S PUSH.

MEMO

SECTION 6A

GENERAL ENGINE MECHANICAL

CONTENTS

Cylinder Head 6A– 1
Valve Springs, Oil Controller, Valve, Valve Guide, (and HLA for DOHC) 6A– 4
Camshaft 6A–11
Rocker Arm Assembly 6A–17
Oil Pump 6A–20
Crankshaft 6A–23
Piston and Connecting Rod 6A–30
Cylinder Block 6A–37

CYLINDER HEAD

SOHC Model

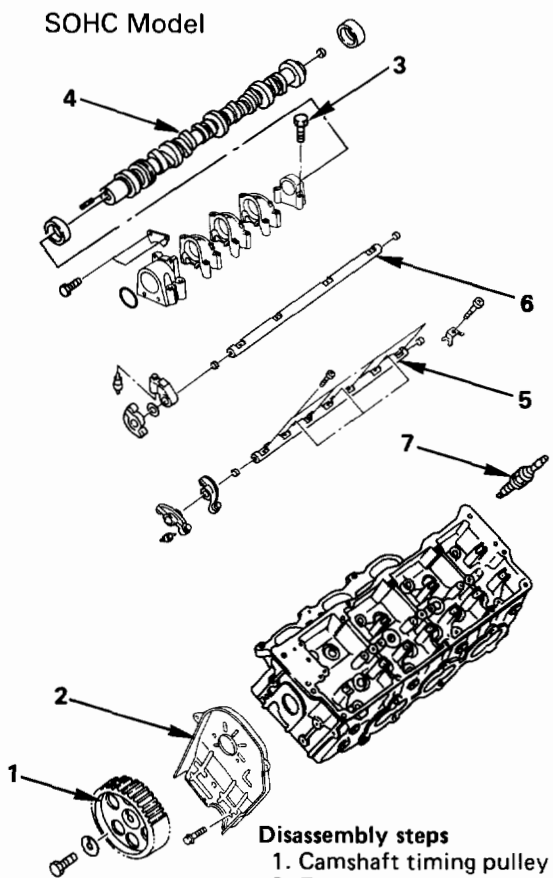

Disassembly steps
1. Camshaft timing pulley
2. Front plate
3. Camshaft bracket fixing bolts
4. Camshaft, oil seal and camshaft end plug
5. Rockershaft assembly (Exhaust side)
6. Rockershaft assembly (Intake side)
7. Spark plug

Reassembly steps
To reassemble, follow the disassembly steps in the reverse order.

DOHC Model

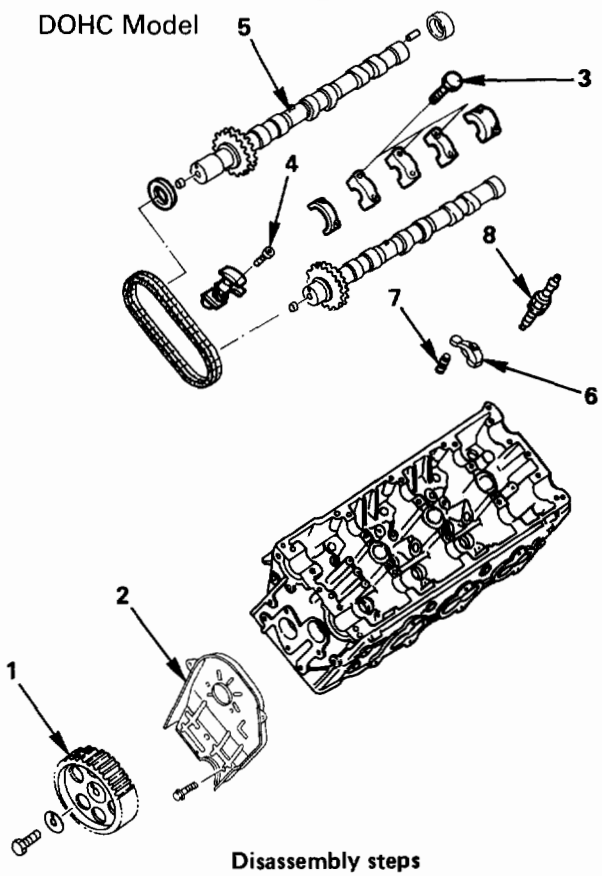

Disassembly steps
1. Camshaft timing pulley
2. Front plate
3. Camshaft bracket fixing bolts
4. Chain tensioner fixing bolts
5. Camshaft, oil seal and camshaft end plug
6. Swing arm
7. Hydraulic lash adjusters (HLA)
8. Spark plug

Reassembly steps
To reassemble, follow the disassembly steps in the reverse order.

Fig. 6A-1

NOTE:

- During disassembly, be sure that the valve train components are kept together and identified so that they can be re-installed in their original locations.
- Before removing the cylinder head from the engine and before disassembling the valve mechanism, perform a compression test and note the results.

DISASSEMBLY

(SOHC)

1. **Camshaft timing pulley**
2. **Front plate**
3. **Camshaft bracket fixing bolts**
4. **Camshaft, oil seal and camshaft end plug**
   - Remove them with camshaft bracket.
5. **Rockershaft assembly (Exhaust side)**
6. **Rockershaft assembly (Intake side)**
7. **Spark plug**

CAUTION:

- Do not remove the spark plugs when the head and plugs are hot.
- Clean dirt and debris from spark plug recess areas.

(DOHC)

1. **Camshaft timing pulley**
2. **Front plate**
3. **Camshaft bracket fixing bolts**
4. **Chain tensioner fixing bolts**
5. **Camshaft, oil seal and camshaft end plug**
   - Remove them with chain and chain tensioner
6. **Swing arm.**
7. **Hydraulic lash adjusters (HLA)**
   NOTE:
   Immerse HLA in engine oil, taking care not to turn it upside down or sideways in order to prevent any air from entering into HLA.
8. **Spark plug**

CAUTION:

- Do not remove the spark plugs when the head and plugs are hot.
- Clean dirt and debris from spark plug recess areas.

CLEAN

- Cylinder head
  Carefully remove all varnish, soot and carbon to the bare metal. Do not use a motorized wire brush on any gasket sealing surface.

INSPECTION AND REPAIR

- Cylinder head gasket and mating surfaces for leaks, corrosion and blow-by. If the gasket has failed, determine the cause.
  - Insufficient torque on head bolts
  - Improper installation
  - Loose or warped cylinder head
  - Missing dowel pins
  - Warped case surface

1. Cylinder head bolts for damaged threads or stretching and damaged heads caused by improper use of tools.

CAUTION:
Replace used cylinder head bolts.

2. Cylinder head for cracks, especially between valve seats and in the exhaust ports.
3. Cylinder head deck for corrosion, sand particles in head and porosity.

CAUTION:
Do not attempt to weld the cylinder head. Replace it.

4. Cylinder head deck, intake and exhaust manifold mating surfaces for flatness (Fig. 6A-2). These surfaces may be re-conditioned by milling. If the surfaces are "out of flat" by more than specification, the surface should be ground to within specifications. If more than repairable limit of specification, it should be replaced.
5. Water jacket sealing plugs seating surfaces.

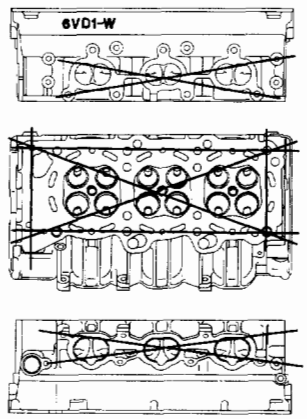

mm (in)

		Standard	Warpage limit	Maximum Repairable limit
Head surface Manifold surface		0.05 (0.002) or less	0.2 (0.00787)	0.2 (0.00787)
Head height	SOHC	104.8 (4.1260)	0.2 (0.00787)	104.6 (4.1181)
	DOHC	137.5 (5.4134)	0.2 (0.00787)	137.3 (5.4055)

Fig. 6A-2

REASSEMBLY

(SOHC)

7. **Spark plug**
   - Tighten all the spark plugs.

Torque	N·m (lb·ft)	18 (13)

6. **Rockershaft assembly (intake side)**
   - Refer to "Rockerarm assembly, HLA (SOHC) installation" in this Section.
5. **Rockershaft assembly (exhaust side)**
   - Refer to "Rockerarm assembly, HLA (SOHC) installation" in this Section.
4. **Camshaft, oil seal and camshaft end plug**
   - Refer to "Camshaft installation" in this Section.
3. **Camshaft bracket fixing bolts**
   - Refer to "Camshaft installation" in this section
2. **Front plate**
1. **Camshaft timing pulley**
   - Tighten the camshaft timing pulley fixing bolts.

Torque	N·m (lb·ft)	63 (46)

(DOHC)

8. **Spark plug**
   - Tighten all the spark plugs

Torque	N·m (lb·ft)	18 (13)

7. **Hydraulic lash adjusters (HLA)**
   - Apply engine oil to the outside of the HLA
6. **Swing arm**
5. **Camshaft, oil seal and camshaft end plug**
   - Refer to "camshaft installation" in this section.
4. **Chain tensioner fixing bolts**
   - Refer to "camshaft installation" in this section.
3. **Camshaft bracket fixing bolts**
   - Refer to "camshaft installation" in this section.
2. **Front plate**
1. **Camshaft timing pulley**
   - Tighten the camshaft timing pulley fixing bolts.

Torque	N·m (lb·ft)	63 (46)

VALVE SPRING, OIL CONTROLLER, VALVE, VALVE GUIDE (AND HLA FOR DOHC)

SOHC Model

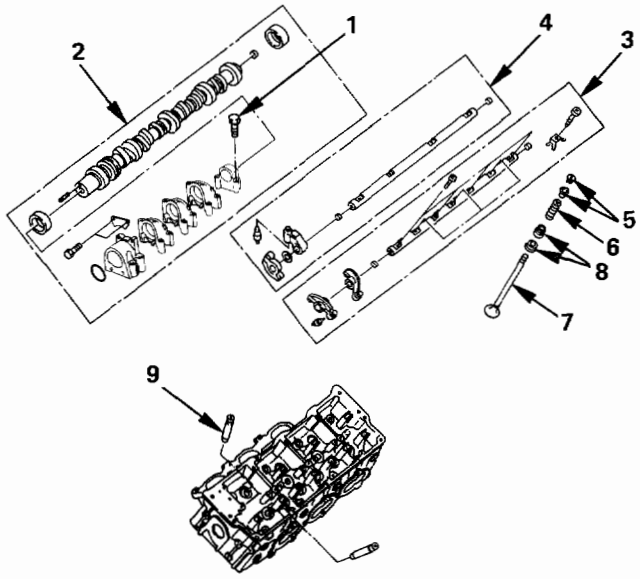

Disassembly steps
1. Camshaft bracket fixing bolts
2. Camshaft assembly
3. Rockershaft assembly (Exhaust side)
4. Rockershaft assembly (Intake side)
5. Split collar and spring upper seat
6. Valve spring
7. Valve
8. Oil controller and spring lower seat
9. Valve guide

Reassembly steps
To reassemble, follow the disassembly steps in the reverse order.

DOHC Model

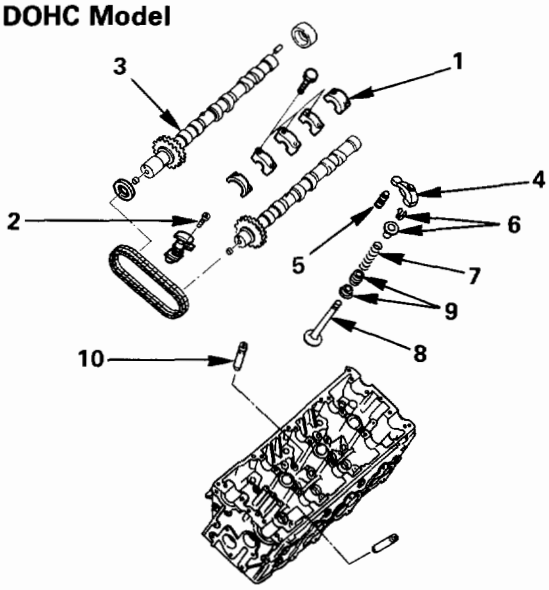

Disassembly steps
1. Camshaft bracket
2. Chain tensioner fixing bolts
3. Camshaft, oil seal and camshaft end plug
4. Swing arm
5. Hydraulic lash adjusters (HLA)
6. Split collar and spring upper seat
7. Valve spring
8. Valve
9. Oil controller and spring lower seat
10. Valve guide

Reassembly steps
To reassemble, follow the disassembly steps in the reverse order.

Fig. 6A-3

DISASSEMBLY

(SOHC)

1. **Camshaft bracket fixing bolts.**
2. **Camshaft assembly**
3. **Rockershaft assembly (Exhaust side)**
4. **Rockershaft assembly (Intake side)**
5. **Split collar and spring upper seat (Fig. 6A-4)**

Using special tool, compress valve spring
Valve spring compressor: J-39251

6. **Valve spring**
7. **Valve**
8. **Oil controller and spring lower seat**
9. **Valve guide**

Valve guide replacer: J-37985

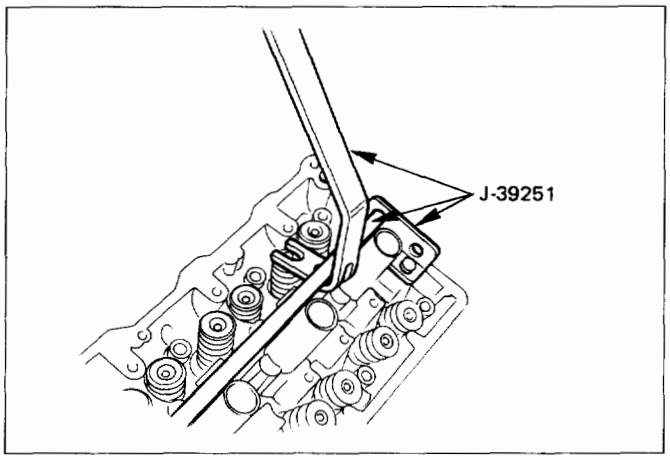

Fig. 6A-4

(DOHC)

1. **Camshaft bracket**
2. **Chain tensioner fixing bolts**
3. **Camshaft, oil seal and camshaft end plug**
   - Remove them with chain and chain tensioner.

4. **Swing arm**
5. **Hydraulic lash adjusters (HLA)**
6. **Split collar and spring upper seat (Fig. 6A-5)**

Using special tool, compress valve spring
Valve spring compressor: J-39251

7. **Valve spring**
8. **Valve**
9. **Oil controller and spring lower**
10. **Valve guide**

Valve guide replacer: J-37985

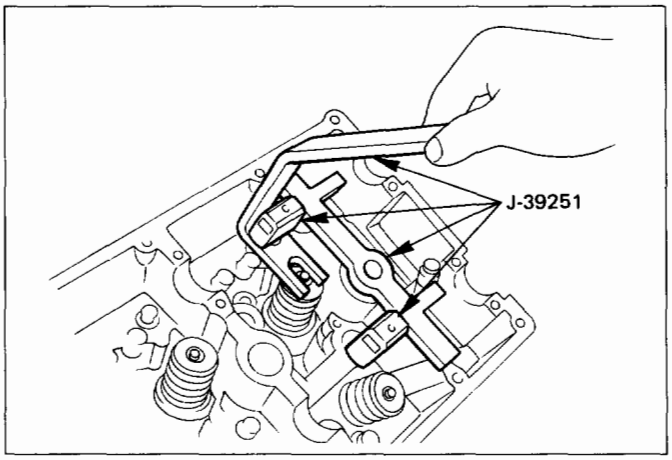

Fig. 6A-5

INSPECTION AND REPAIR

Valve spring

CAUTION:
Visually inspect the valve springs and replace them if damage or abnormal wear is evident.

1. **Free height (Fig. 6A-6)**
   - Measure the free height of the springs. The springs must be replaced if the free height is below the specified limit.

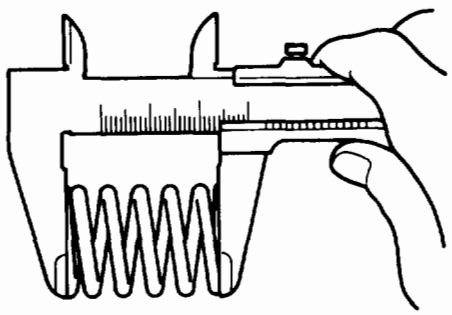

mm (in)

Standard	Limit
50.06 (1.9709)	48.6 (1.9134)

Fig. 6A-6

2. **Squareness (Fig. 6A-7)**
   - Measure the valve spring squareness with a steel square.
   Replace the valve springs if the measured value exceeds the specified limit.

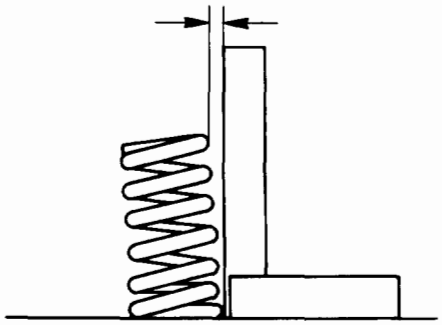

Limit	mm (in)	2.2 (0.0866)

Fig. 6A-7

3. **Spring tension (Fig. 6A-8)**
   - Use a spring tester to compress the springs to the installed height. Measure the compressed spring tension.
   Replace the springs if the measured tension is below the specified limit.

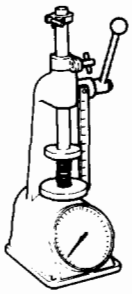

N (lb)

At installed height 39.0 mm (1.54 in)	
Standard	Limit
245 (55)	Less than 200 (45)

Fig. 6A-8

Valve Guide

CAUTION:
Taking care not to damage the valve seat contact surface, when removing carbon adhering to the valve head.
Carefully inspect the valve stem for scratching or abnormal wear. If these conditions are present, the valve and the valve guide must be replaced as a set.

1. Valve Guide Clearance

- Measure the valve stem diameter with a micrometer.
  If the valve stem diameter is less than the specified limit, the valve and the valve guide must be replaced as a set (Fig. 6A-9).

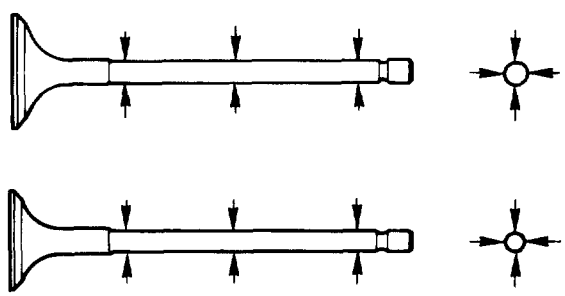

mm(in)

		Standard	Limit
Diameter of Valve Stem	Intake	5.959-5.977 (0.2346-0.2353)	5.90 (0.2323)
	Exhaust	5.952-5.970 (0.2343-0.2350)	

Fig. 6A-9

- Measure the inside diameter of the valve guide with a micrometer
- Subtract the measured outer diameter of the valve stem from the measured inner diameter of the valve guide. If the value exceeds the specified limit, the valve and the valve guide must be replaced as a set.

mm (in)

	Standard	Limit
Inlet clearance	0.023-0.056 (0.0009-0.0022)	0.20 (0.00787)
Exhaust clearance	0.030-0.063 (0.0012-0.0025)	

Valve Guide Replacement

1. Using special tool, drive out the valve guide from the combustion chamber side (Fig. 6A-10).

Valve guide replacer: J-37985

2. Apply engine oil to the outside of the valve guide.
   Using special tool, drive in a new valve guide from the camshaft side, and check the valve guide height (Fig. 6A-11).

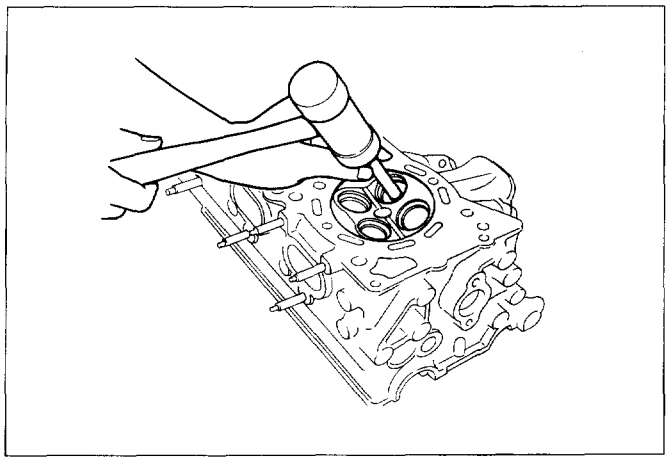

Fig. 6A-10

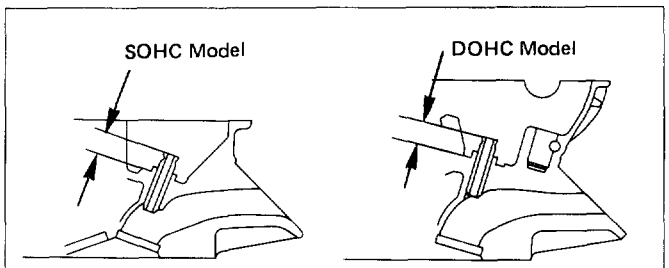

mm (in)

Valve guide upper end height (Measured from the cylinder head upper face)	17.5 (0.6890)

Fig. 6A-11

Valve guide replacer: J-37985
Valve guide replacer adapter: J-39204

3. Check the clearance. If the clearance is less than the specified value, ream the inside diameter of valve guide.
   Using a sharp 6 mm reamer, ream the valve guide to obtain the specified clearance.

Valve Seat

1. Measure the protrusion of valve stem when a new valve installed in the cylinder head. If the protrusion of the valve stem should exceed the limit, replace the valve seat insert or the cylinder head assembly. (Fig. 6A-12)

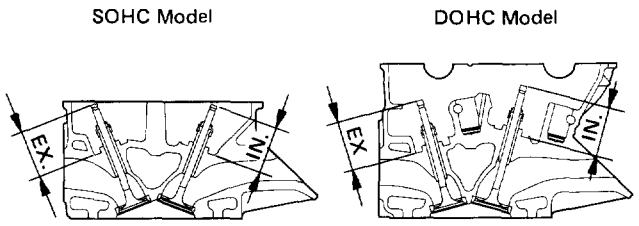

mm (in)

		Standard	Limit
Intake	SOHC	42.50 (1.6732)	42.85 (1.6870)
	DOHC	44.27 (1.7429)	44.62 (1.7567)
Exhaust	SOHC	42.50 (1.6732)	42.85 (1.6870)
	DOHC	44.30 (1.7441)	44.65 (1.7579)

Fig. 6A-12

2. Measure the valve seat contact width. Make the necessary corrections if the seat contact surface is damaged or rough or if the contact width wear exceeds the limit (Fig. 6A-13).

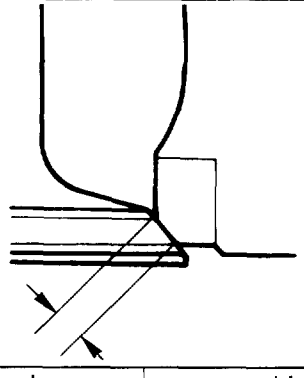

mm (in)

Standard	Limit
1.13 (0.0445)	0.63 (0.0248)

Fig. 6A-13

Contact surface angle on valve seat on valve

1. Measure contact surface angle on valve seat (Fig. 6A-14).
2. If the measured value exceeds the limit, replace valve, valve guide and valve seat as a set.

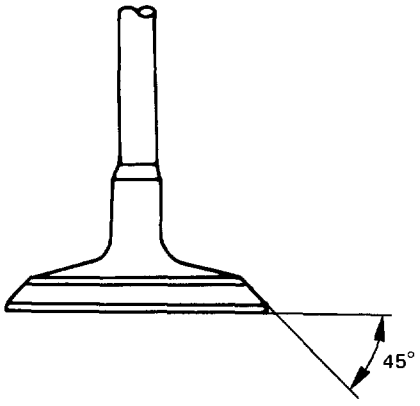

Fig. 6A-14

Valve Seat Insert Correction (Fig. 6A-15, Fig. 6A-16)

1. Remove the carbon from the valve seat insert surface.
2. Use a valve cutter to minimize scratches and other rough areas.This will bring the contact width back to the standard value.
   Remove only the scratches and rough areas. Do not cut away too much. Take care not to cut away unblemished areas of the valve seat surface.

Valve seat angle degree	45°

3. Apply abrasive compound to the valve seat insert surface.
4. Insert the valve into the valve guide.
5. Turn the valve while tapping it to fit the valve seat insert.
6. Check that the valve contact width is correct.
7. Check that the valve seat insert surface is in contact with the entire circumference of the valve.

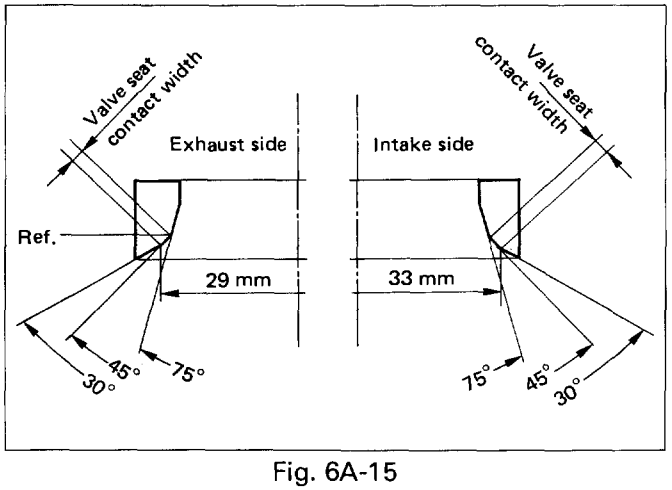

Fig. 6A-15

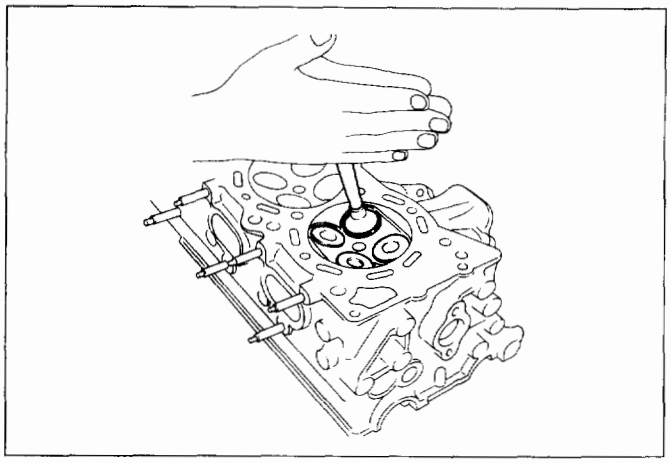

Fig. 6A-16

Valve seat insert replacement

1. Arc weld the rod at several points. Be careful not to damage the aluminum section (Fig. 6A-17).

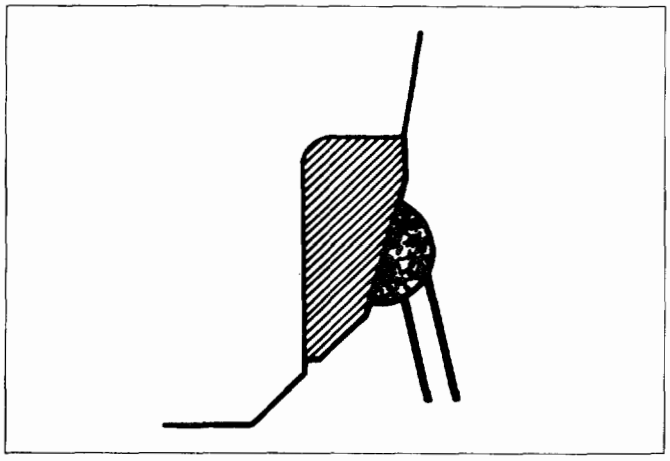

Fig. 6A-17

2. Allow the rod to cool for a new minutes. This will cause the valve seat to shrink.
3. Strike the rod and pull it out.
4. Carefully clean the valve seat press-fit section on the cylinder head side.
5. Heat the press-fit section with steam or some other means to cause expansion.
   Cool the valve seat with dry ice or some other means.
6. Insert the press-fit section into the valve seat horizontally.

	mm (in)
Standard fitting interference	0.11 – 0.16 (0.0043 – 0.0063)

7. After insertion, use a seat grinder to grind finish the seating face.
   Carefully note the seating angle, the contact width, and the depression.
8. Lap the valve and the seat.

Swing arm (DOHC)

- Visually inspect the swing arms and replace them if damage or abnormal wear is evident.

Hydraulic lash adjuster (HLA) (DOHC)

- Do not disassemble valve lifter, because it is a non-serviceable assembly.
- Keep the removed HLA upright in the engine oil without turning it upside down or laying it on its side.
- Visually inspect and if damage or abnormal wear is evident, replace them.

1. Use a micrometer to measure HLA outer diameter (Fig. 6A-18).

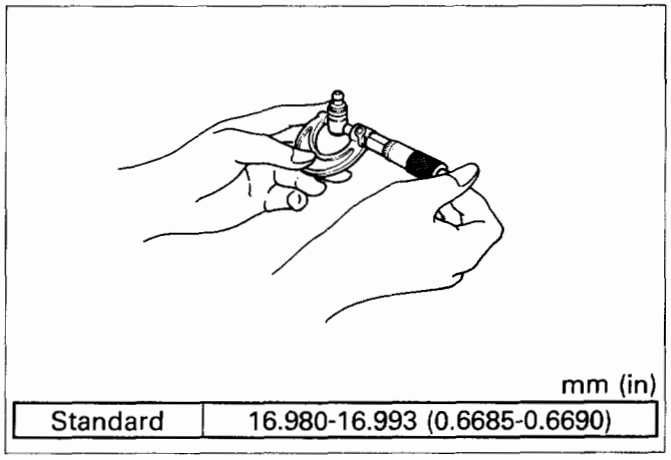

mm (in)

Standard	16.980-16.993 (0.6685-0.6690)

Fig. 6A-18

2. Subtract the HLA outside diameter from the inside diameter of each HLA mounting hole in the cylinder head (Fig. 6A-19).
   Replace the cylinder head and/or HLA if the measured oil clearance exceeds the specified limit.

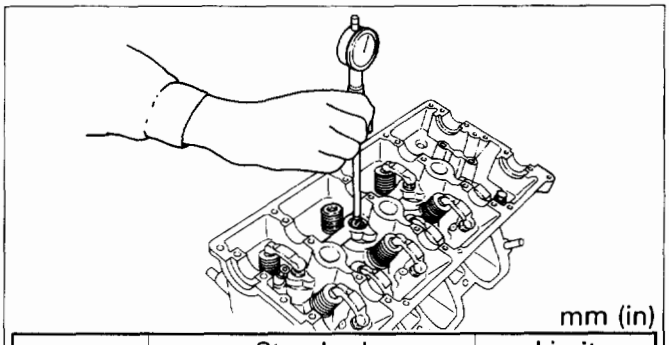

mm (in)

	Standard	Limit
Clearance	0.007-0.040 (0.0003-0.0016)	0.073 (0.0029)

Fig. 6A-19

3. If the HLA contains air (the HLA can move when it is compressed), air bleeding must be done according to the following procedure (Fig. 6A-20).

1) While dipping HLA in engine oil, as shown in Figure, push check ball in using a 2 mm (0.08 in) dia. round bar.
2) With check ball pushed in, manually move plunger up and down at one-second intervals until air bubbles disappear.
3) After air bubbles disappear, remove round bar and quickly push plunger in to ensure it is locked. If plunger does not lock properly, replace valve lash adjuster.

HLA (after air is bled) in engine oil until it is ready for installation.

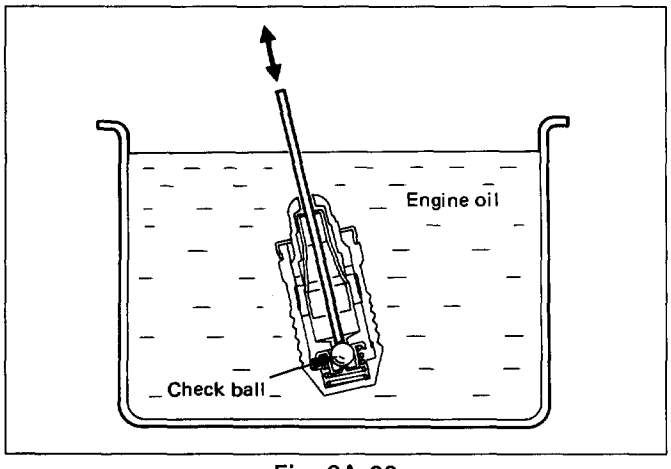

Fig. 6A-20

REASSEMBLY

(SOHC)

9. Valve guide

- Apply engine oil to the outside of the valve guide.
  Using special tool, drive in a new valve guide from the camshaft side.

Valve guide replacer: J-37985
Valve guide replacer adapter: J-39204

8. Oil controller and spring lower seat (Fig. 6A-21)

- Using special tool, drive in a new oil controller.

Oil controller replacer: J-38537

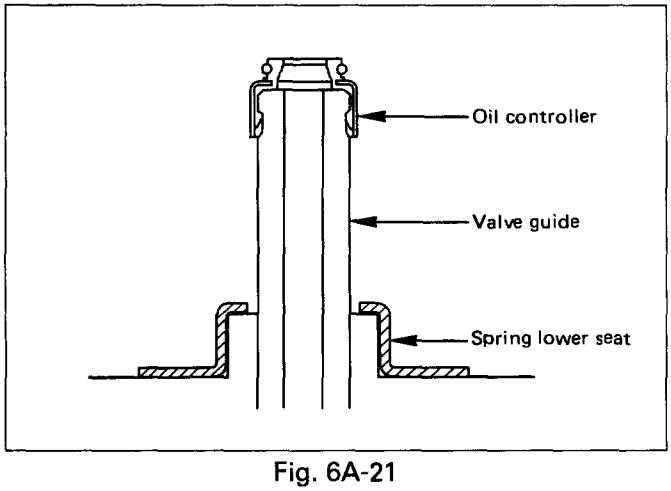

Fig. 6A-21

7. Valve

- Apply engine oil to the outside of the valve stem.

6. Valve spring (Fig. 6A-22)

- Attach the valve seat to the upper spring seat. The painted area of the valve spring should be facing downward.

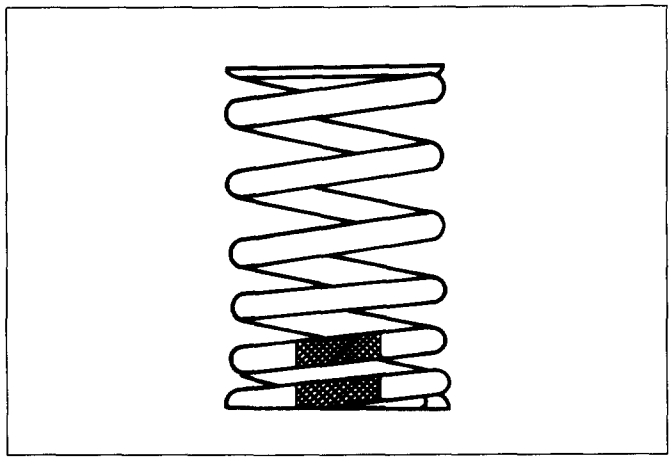

Fig. 6A-22

5. Split collar and upper spring seat (Fig. 6A-23)

- Use a spring compressor to push the valve spring into position.
- Install the spring seat split collar.
- Set the split collar by tapping lightly around the head of the collar with a rubber hammer.
- Valve spring compressor: J-39251

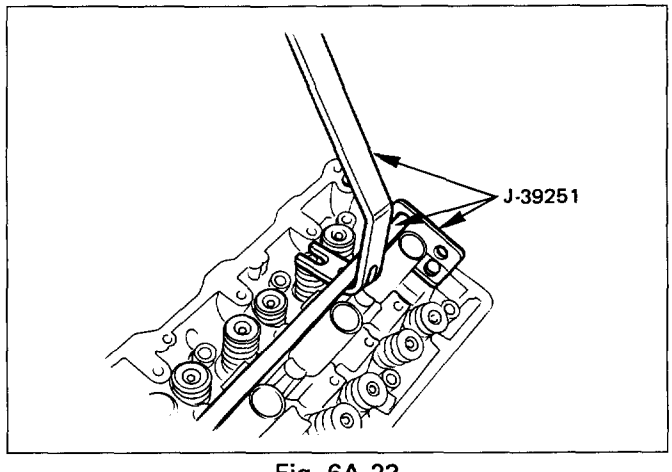

Fig. 6A-23

4. Rockershaft assembly (Intake side)

- Refer to "Rockershaft assembly installation" Section.

3. Rockershaft assembly (Exhaust side)

- Refer to "Rockershaft assembly installation" Section.

2. Camshaft assembly

- Refer to "Camshaft assembly installation" Section.

1. **Camshaft bracket fixing bolts**
   - Refer to "Camshaft assembly installation" Section.

(DOHC)

10. **Valve guide**
    - Apply engine oil to the outside of the valve guide. Using special tool, drive in a new valve guide from the camshaft side.

    Valve guide replacer: J-37985
    Valve guide replacer adapter: J-39204

9. **Oil controller and spring lower seat (Fig. 6A-24)**
    - Using special tool, drive in a new oil controller.

    Oil Controller replacer: J-37986

8. **Valve**
    - Apply engine oil to the outside of the valve stem.

7. **Valve spring (Fig. 6A-25)**
    - Attach the valve seat to the upper spring seat. The painted area of the valve spring should be facing downward.

6. **Split collar and spring upper seat (Fig. 6A-26)**
    - Use a spring compressor to push the valve spring into position.
    - Install the spring seat split collar.
    - Set the split collar by tapping lightly around the head of the collar with a rubber hammer.

    Valve spring compressor; J-39251

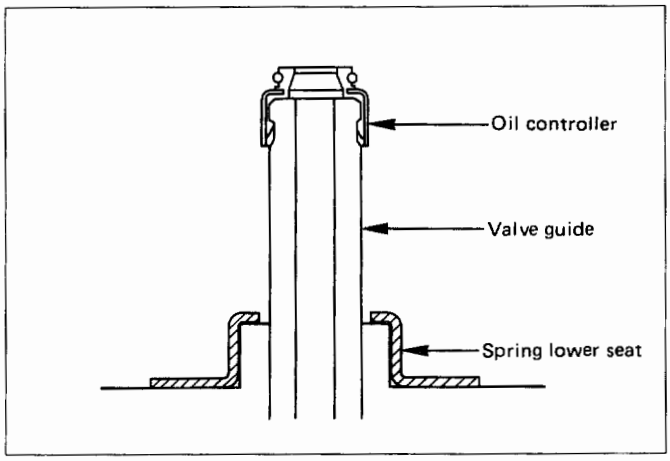

Fig. 6A-24

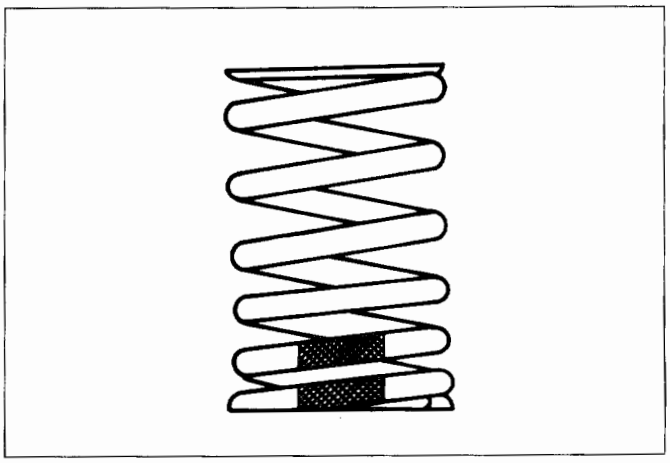

Fig. 6A-25

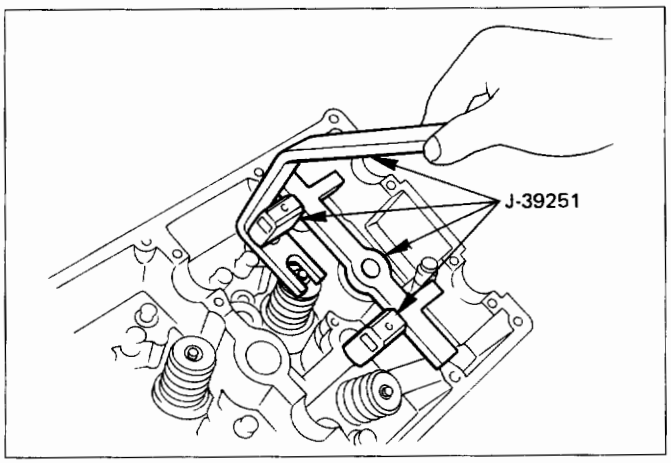

Fig. 6A-26

CAUTION:
When compressing the valve spring, take care not to contact the upper valve seat with the oil controller.

5. **Hydraulic lash adjuster (HLA)**
   - Make sure that the HLA is clean and apply engine oil to its outer surface before installation.
4. **Swing arm**
3. **Camshaft, oil seal and camshaft end plug**
   - Refer to "Camshaft installation" in this Section.
2. **Chain tensioner fixing bolts.**
   - Refer to "Camshaft installation" in this Section.
1. **Camshaft bracket**
   - Refer to "Camshaft installation" in this Section.

CAMSHAFT

SOHC Model

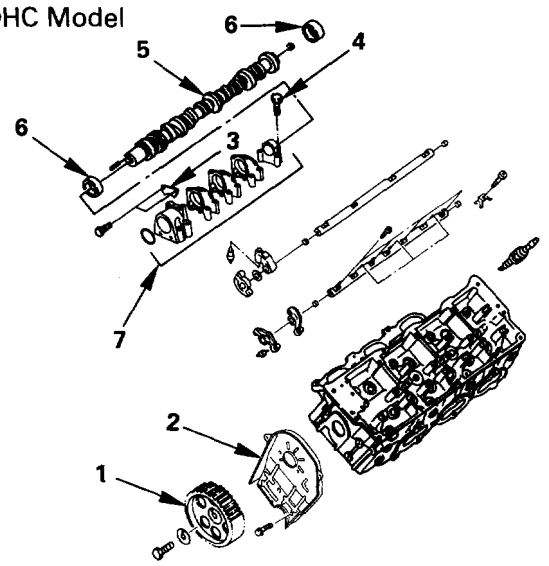

Disassembly steps
1. Camshaft timing pulley
2. Front plate
3. Thrust plate
4. Camshaft bracket housing fixing bolts
5. Camshaft
6. Oil seal and camshaft end plug
7. Camshaft bracket housing

Reassembly steps
7. Camshaft bracket housing
5. Camshaft
4. Camshaft bracket housing fixing bolts
3. Thrust plate
6. Oil seal and camshaft end plug
2. Front plate
1. Camshaft timing pulley

DOHC Model

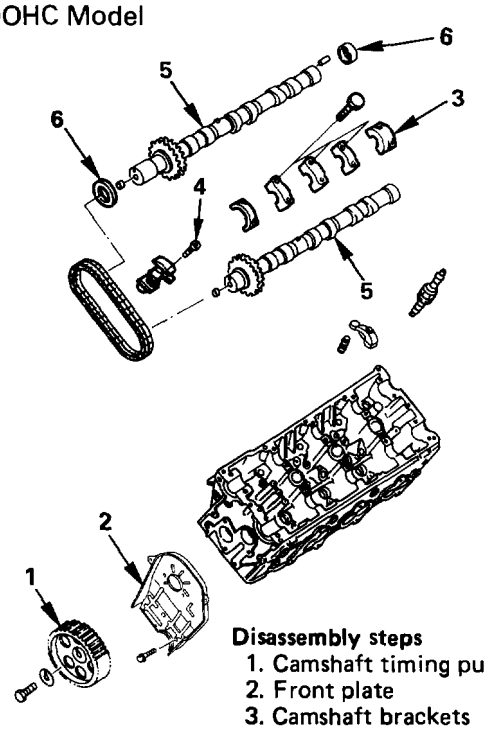

Disassembly steps
1. Camshaft timing pulley
2. Front plate
3. Camshaft brackets
4. Chain tensioner fixing bolts
5. Camshaft
6. Oil seal and camshaft end plug

Reassembly steps
5. Camshaft
4. Chain tensioner fixing bolts
3. Camshaft brackets
6. Oil seal and camshaft end plug
2. Front plate
1. Camshaft timing pulley

Fig. 6A-27

DISASSEMBLY

(SOHC)

1. **Camshaft timing pulley**
2. **Front plate**
3. **Thrust plate**
4. **Camshaft bracket housing fixing bolts**
5. **Camshaft**
   - Remove the camshaft with camshaft bracket.
6. **Oil seal and camshaft end plug**
7. **Camshaft bracket housing**
   - Remove the camshaft bracket from camshaft.

(DOHC)

1. **Camshaft timing pulley**
2. **Front plate**
3. **Camshaft brackets**
4. **Chain tensioner fixing bolts**
5. **Camshaft**
   - Remove the camshaft with chain and chain tensioner.
6. **Oil seal and camshaft end plug**

INSPECTION AND REPAIR

1. Use a micrometer to measure the cam lobe height and uneven wear (Fig. 6A-28).

   Replace the camshaft if either the lobe height or the uneven wear exceeds the specified limit.
2. Use a micrometer to measure the diameter and the uneven wear of the camshaft journals (Fig. 6A-29).

   Replace the camshaft if the diameter or the uneven wear exceeds the specified limit.
3. Place the camshaft on V-blocks (Fig. 6A-30).

   Slowly rotate the camshaft and measure the runout with a dial indicator.
   Replace the camshaft if the runout exceeds the specified limit.

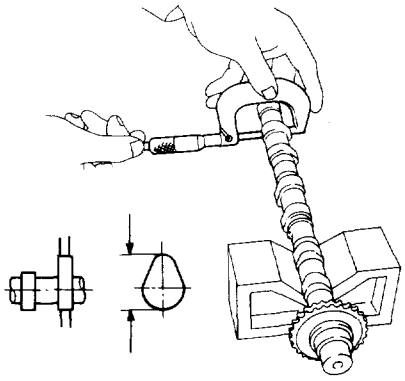

mm (in)

		Limit	
		SOHC	DOHC
Lobe height	Intake	34.240 (1.3480)	34.130 (1.3437)
	Exhaust	37.180 (1.4638)	34.130 (1.3437)
Uneven wear		0.05 (0.0020)	

Fig. 6A-28

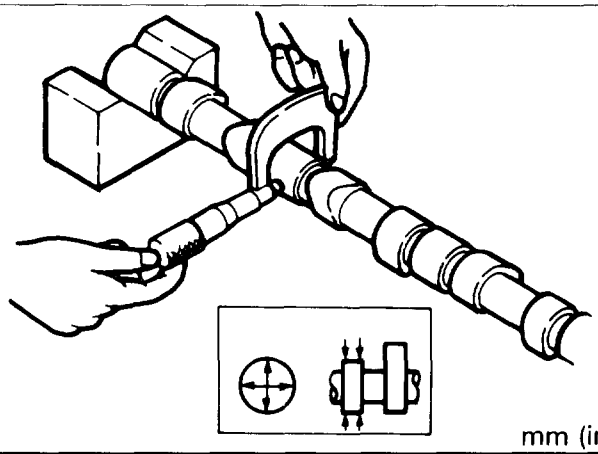

mm (in)

		Standard	Limit
Journal Diameter	SOHC	44.939-44.960 (1.7692-1.7701)	44.790 (1.7634)
	DOHC	26.950-26.970 (1.0610-1.0618)	26.810 (1.0555)
Uneven wear		0.05 (0.0020)	

Fig. 6A-29

4. Measure the camshaft journal oil clearance.

(SOHC)

1) Measure the camshaft bracket housing inside diameter (Fig. 6A-31)
2) Subtract the camshaft outside diameter (measured at the point where the camshaft bracket housing moves on the camshaft) from the camshaft bracket housing inside diameter.

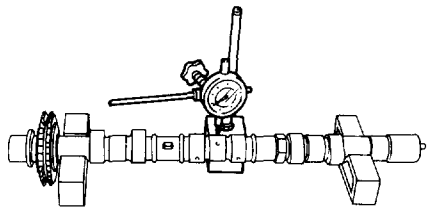

mm (in)

	Limit
Run out	0.1 (0.0039)

Fig. 6A-30

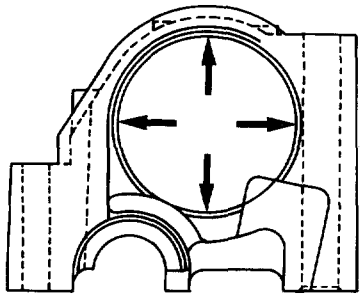

mm (in)

	Standard	Limit
Oil Clearance	0.040-0.108 (0.0016-0.0043)	0.5 (0.0197)

Fig. 6A-31

Replace the cylinder head and/or camshaft if the measured oil clearance exceeds the specified limit.

(DOHC)

1) Carefully clean the camshaft journal, the cam brackets, and the cylinder head.
2) Place the camshaft on the cylinder head.
3) Place the plastigage on the journal (Fig. 6A-32)
4) Place the cam brackets in their assigned position.
   Tighten the cam brackets to the specified torque (Fig. 6A-33)

Torque	N·m (lb·in)	10 (87)

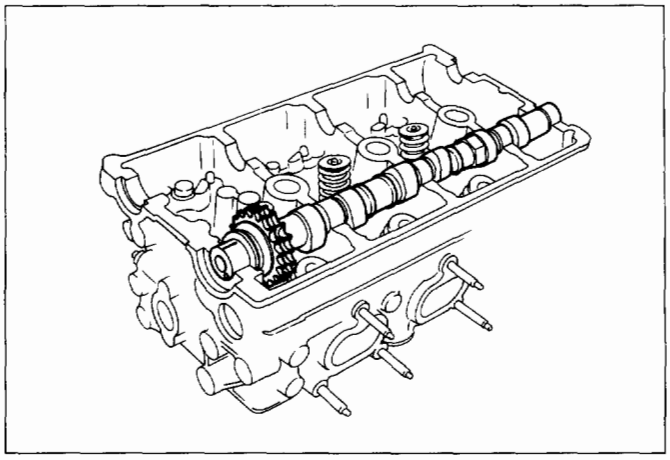

Fig. 6A-32

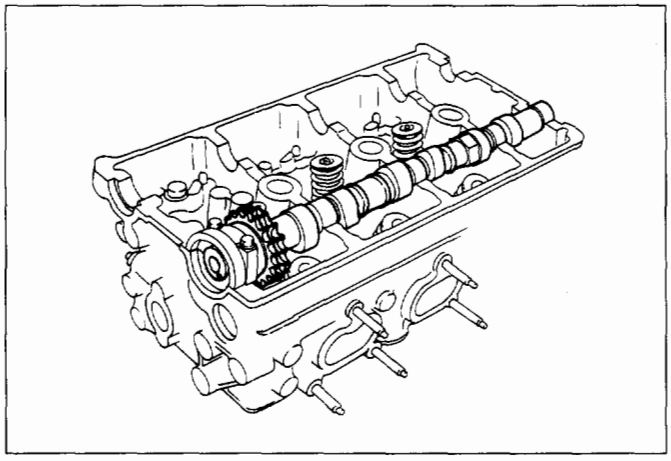

Fig. 6A-33

NOTE:
Do not turn the camshaft.

5) Remove the cam brackets and measure the plastigage at its widest point (Fig. 6A-34). Replace the cylinder head and/or the camshaft if the clearance exceeds the specified limit.
6) Clean the plastigage from the camshaft and the cam brackets.

5. Measure the camshaft thrust clearance.

(SOHC)

1) Carefully clean the camshaft journal the camshaft bracket housing and the cylinder head.
2) Install camshaft with camshaft bracket housing on cylinder head.
3) Tighten camshaft bracket housing fixing bolts in sequence in illustration (Fig. 6A-35).

Torque	N·m (lb·in)	M6 :	8 (69)
	N·m (lb·ft)	M8 :	18 (13)

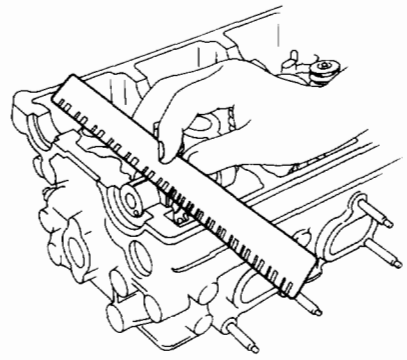

mm (in)

	Standard	Limit
Oil Clearance	0.050-0.100 (0.00197-0.00394)	0.5 (0.0059)

Fig. 6A-34

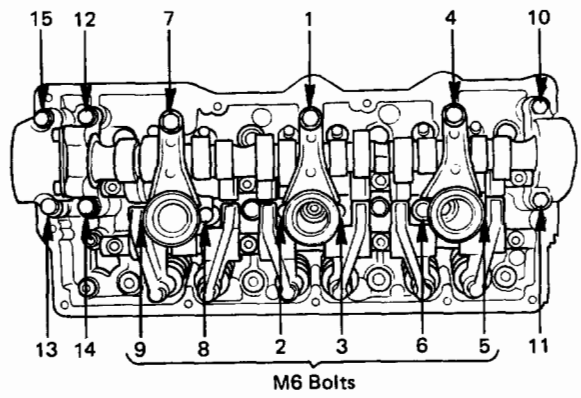

Fig. 6A-35

4) Install thrust plate and tighten it to the specified torque.

Torque	N·m (lb·in)	10 (87)

5) Measure the camshaft thrust clearance with a dial indicator. Replace the camshaft and/or the cylinder head if the camshaft thrust clearance exceeds the specified limit (Fig. 6A-36).

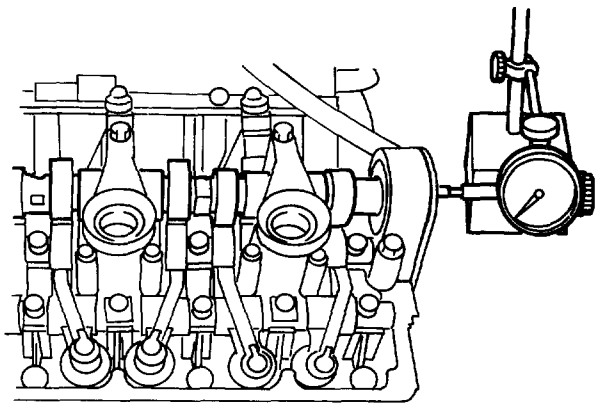

mm (in)

	Standard	Limit
Camshaft thrust Clearance	0.07-0.20 (0.0028-0.0079)	0.25 (0.0098)

Fig. 6A-36

(DOHC)

1) Carefully clean the camshaft journal, the cam brackets, and the cylinder head.
2) Place the camshaft on the cylinder head.
3) Tighten camshaft bracket housing fixing bolts in sequence in illustration (Fig. 6A-37).

Torque	N·m (lb·in)	10 (87)

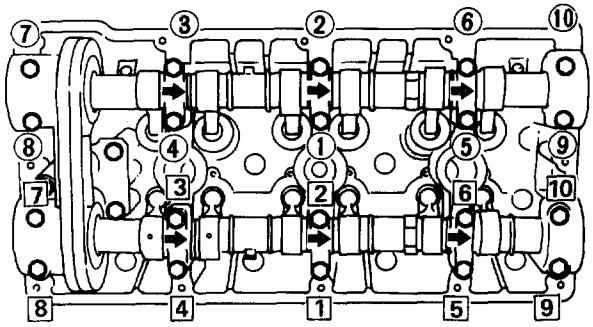

Fig. 6A-37

4) Measure the camshaft thrust clearance with a dial indicator. Replace the camshaft and/or the cylinder head if the camshaft thrust clearance exceeds the specified limit (Fig. 6A-38).

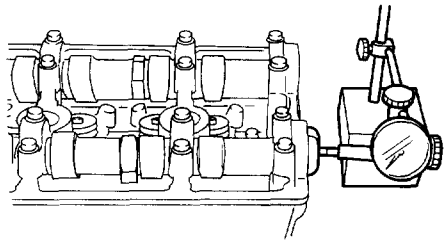

mm (in)

	Standard	Limit
Camshaft thrust clearance	0.05-0.15 (0.0020-0.0059)	0.20 (0.0079)

Fig. 6A-38

REASSEMBLY

(SOHC)

7. Camshaft bracket housing

- Install camshaft bracket housing on camshaft.

NOTE:

Take care not to install wrong camshaft bracket housing.

5. Camshaft

- Remove any oil on cylinder head and front, rear camshaft bracket housing.
- Apply engine oil to camshaft journal.
- Install camshaft with camshaft bracket.

4. Camshaft bracket housing fixing bolts

1) Apply sealant (TB-1207B or equivalent) to contact surfaces of cylinder head with front and rear camshaft bracket housing as shown in Fig. 6A-39.
2) Tighten camshaft bracket housing fixing bolts in sequence in illustration (Fig. 6A-40)

Torque	N·m (lb·in)	M6 :	8 (69)
	N·m (lb·ft)	M8 :	18 (13)

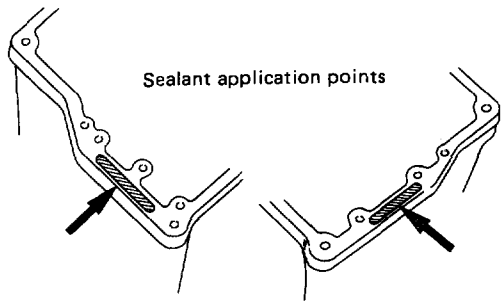

Fig. 6A-39

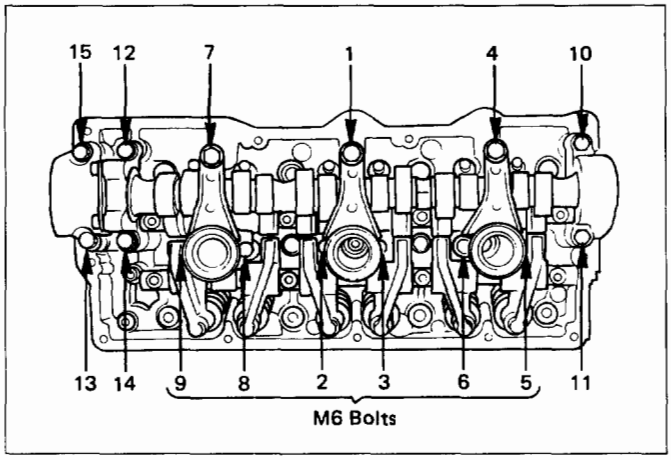

Fig. 6A-40

3. Thrust plate
- Tighten the bolts

Torque	N·m (lb·in)	10 (87)

6. Oil seal and camshaft end plug

Apply engine oil to the camshaft oil seal lip and install new camshaft oil seal (Fig. 6A-41).

Camshaft oil seal Installer: J-39203

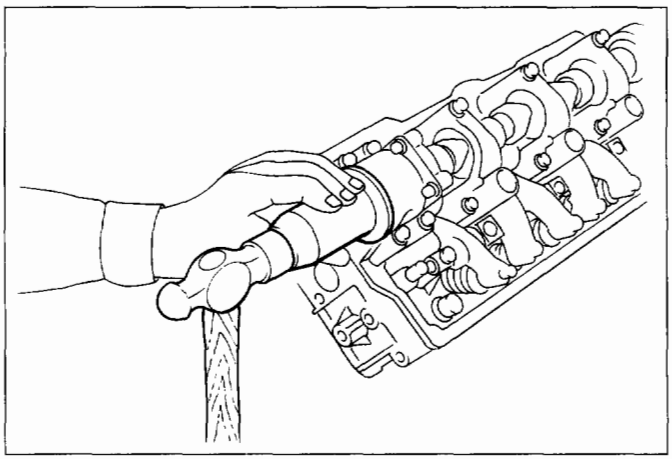

Fig. 6A-41

2. Front plate
1. Camshaft timing pulley
- Tighten the camshaft timing pulley fixing bolts

Torque	N·m (lb·ft)	63 (46)

(DOHC)
5. Camshaft
- Install camshaft with chain and chain tensioner.

NOTE:
Install a retainer on the tensioner as shown in Fig. 6A-42 to prevent plunger from moving and remove it after securely installing camshaft.

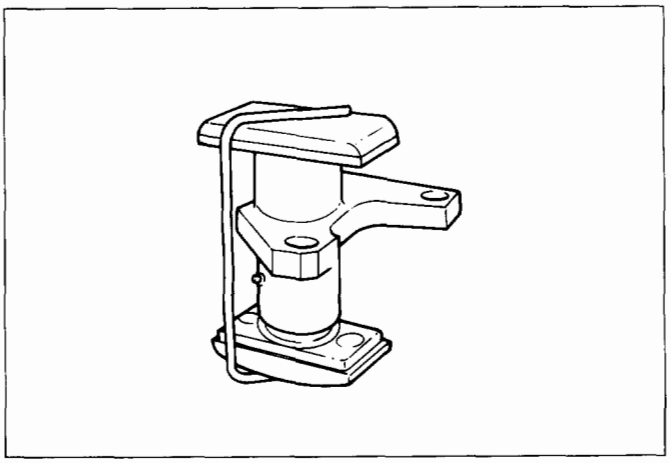

Fig. 6A-42

1) Apply engine oil sufficiently to the following points.
   1 Camshaft journal
   2 Camshaft sprocket
2) Install camshaft on cylinder head.
   1 Align sprocket timing mark to chain timing mark (Fig. 6A-43).
   2 Take care not to install wrong chain tensioners, as left and right tensioners are different from each other.
   The tensioners are marked either R (right) or L (left) (Fig. 6A-44).

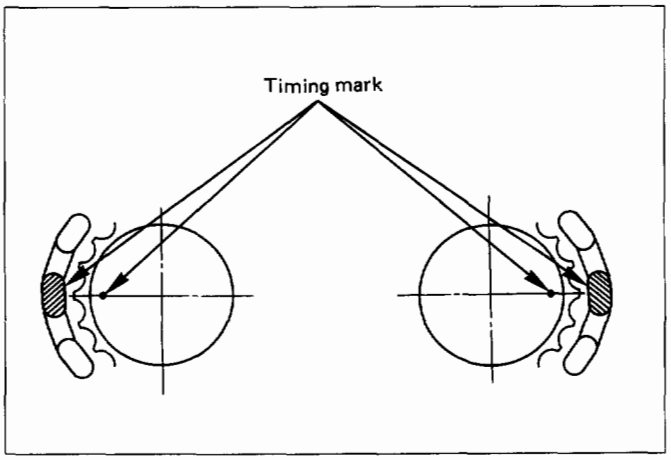

Fig. 6A-43

4. Chain tensioner fixing bolts
- Tighten the bolts.

Torque	N·m (lb·ft)	19 (14)

3. Camshaft brackets
1) Remove any oil from the contact surfaces on the intake and exhaust sides of #1 and #6 camshaft bearing caps on the cylinder head.
2) Apply sealant (TB-1207B or equivalent) to contact surfaces of cylinderhead with #1 and #6 camshaft bracket as shown in Fig. 6A-45.

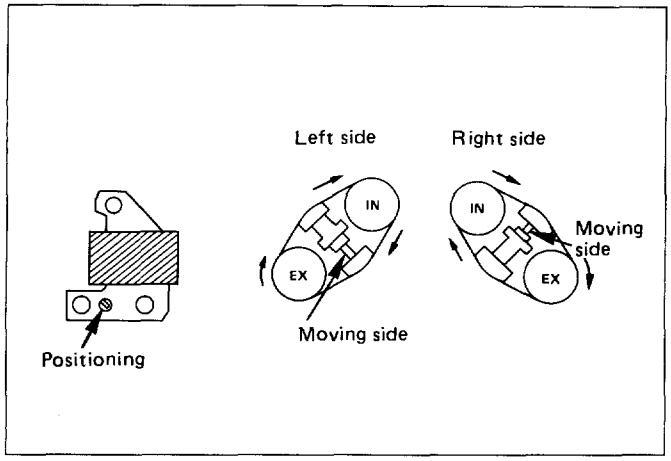

Fig. 6A-44

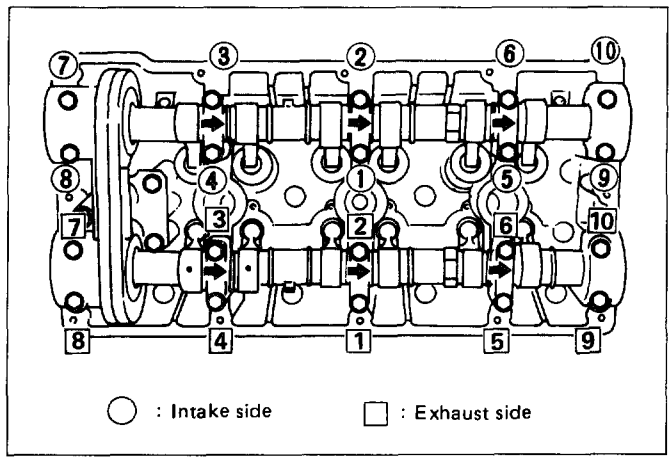

Fig. 6A-46

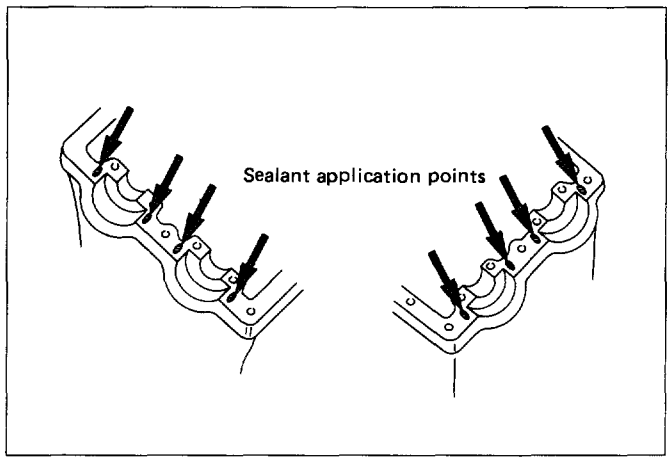

Fig. 6A-45

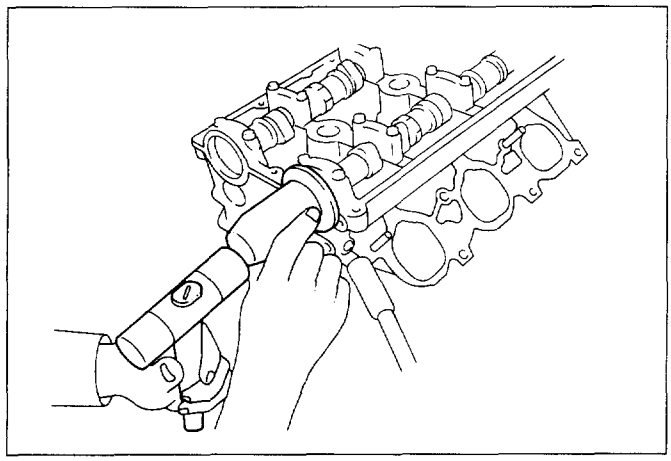

Fig. 6A-47

CAUTION:
Do not apply an excessive amount of sealant to the contact surface. Applying too much sealant will result in the coating overflowing the contact surfaces. This could cause serious damage to the engine.

3) Mount the camshaft bracket on the cylinder head.
4) Tighten camshaft bracket bolts in sequence, as shown in the illustration (Fig. 6A-46).

- The "E" mark is applied to the camshaft bracket exhaust side and, on the other hand, the "I" mark is applied to the intake side. Install the camshaft bracket in the numerical order (1, 2, 3, 4, 6) from the camshaft end without the sprocket.
- The camshaft bracket arrow marks must be pointing towards the camshaft end without the sprocket.

Torque	N·m (lb·in)	10 (87)

6. Oil seal and camshaft end plug

Apply engine oil to the camshaft oil seal lip and install new camshaft oil seal (Fig. 6A-47.)

Camshaft oil seal Installer: J-39203

2. Front plate

1. Camshaft timing pulley

- Install the camshaft timing pulleys.

NOTE:

- Prevent the camshaft from turning by using an open end wrench as shown in the illustration (Fig. 6A-48). Tighten the pulley bolts.

Torque	N·m (lb·ft)	63 (46)

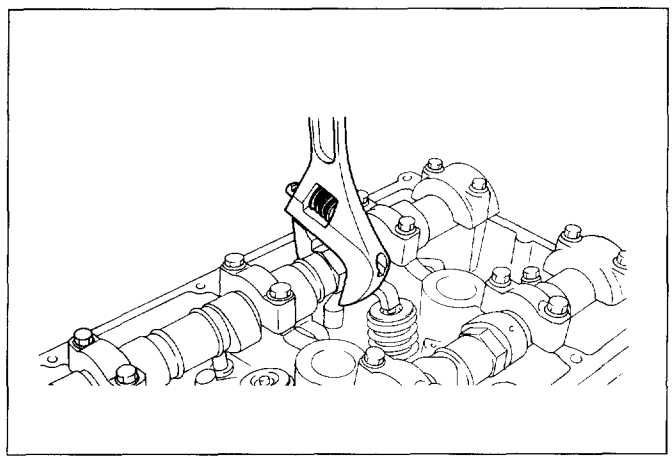

Fig. 6A-48

ROCKER ARM ASSEMBLY

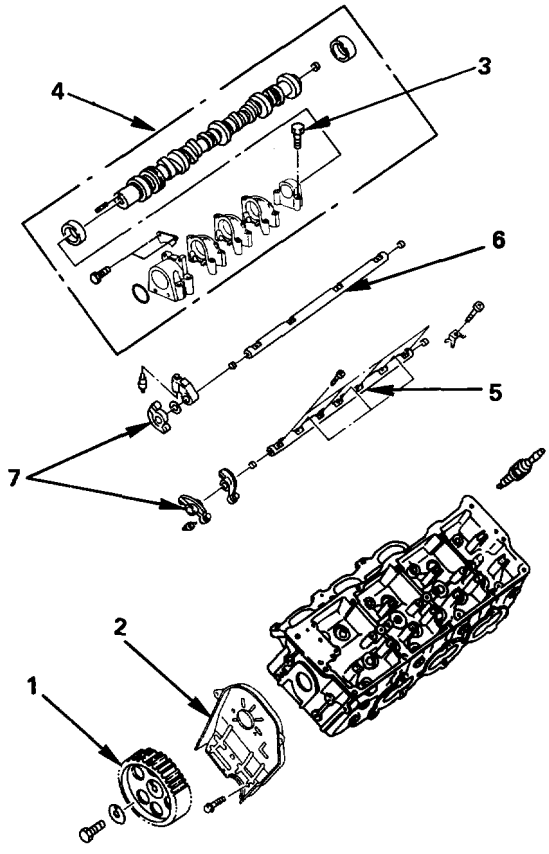

Disassembly steps
1. Camshaft timing pulley
2. Front plate
3. Camshaft bracket housing fixing bolts
4. Camshaft assembly
5. Rockershaft assembly (Exhaust side)
6. Rockershaft assembly (Intake side)
7. Rocker arm

Reassembly steps
To reassemble, follow the disassembly steps in the reverse order.

Fig. 6A-49

DISASSEMBLY

1. **Camshaft timing pulley**
2. **Front plate**
3. **Camshaft bracket housing fixing bolts**
4. **Camshaft assembly**
   - Remove the camshaft with camshaft bracket housing.
5. **Rockershafts assembly (Exhaust side)**
6. **Rockershafts assembly (Intake side)**
7. **Rocker arm**

INSPECTION AND REPAIR

Use a micrometer to measure the rocker shaft outside diameter at the point where the rocker arm moves on the rocker shaft (Fig. 6A-50).
Replace the rocker shaft if the diameter exceeds the specified limit.

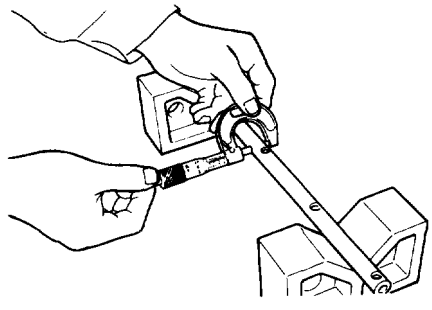

mm (in)

Standard	Limit
15.98-16.00 (0.6291-0.6299)	15.83 (0.6232)

Fig. 6A-50

Oil clearance

1. Measure the rocker arm inside diameter (Fig. 6A-51).
2. Use a micrometer to measure the rocker arm outside diameter at the point where the rocker arm moves on the rocker shaft.
3. Subtract the rocker arm outside diameter (measured at the point where the rocker arm moves on the rocker shaft) from the rocker arm inside diameter.

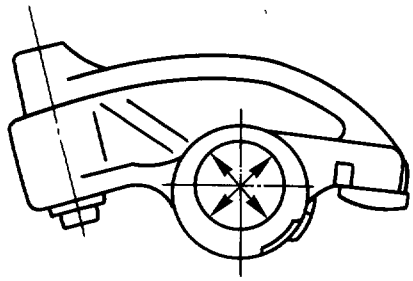

mm (in)

	Standard	Limit
Oil Clearance	0.005-0.045 (0.0002-0.0018)	0.2 (0.0079)

Fig. 6A-51

Replace the rocker arm and/or rocker shaft if the measured oil clearance exceeds the specified limit.

Runout

1. Place the rocker shaft on V-blocks (Fig. 6A-52).
2. Set the dial indicator.
3. Slowly rotate the rocker shaft and measure the runout.
   If the runout is in excess of the specified limit, the rocker shaft must be replaced.

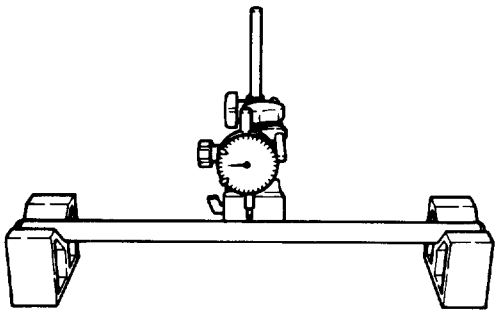

mm (in)

Limit	0.2 (0.0079)

Fig. 6A-52

Rocker arm

CAUTION
Visually inspect the rocker arm and replace them if damage or abnormal wear is evident.

REASSEMBLY

7. Rocker arm

- Apply a light coat of engine oil to the rocker arm shafts.
  Rocker arm shafts are different, so care should be taken when reinstalling rocker shafts (Fig. 6A-55).
- All rocker arms on rocker shaft inlet should be installed in the same direction.

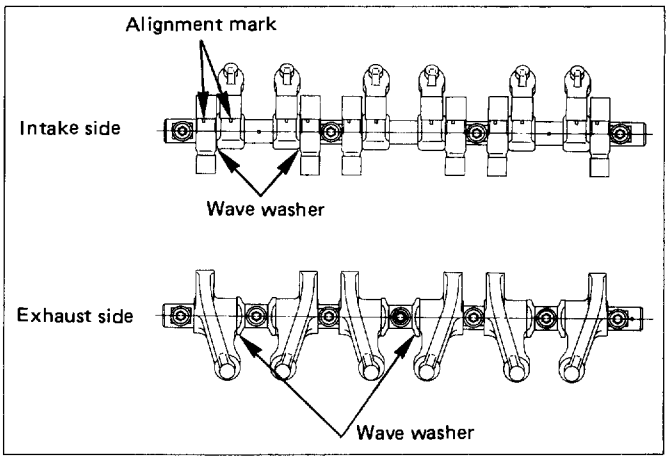

Fig. 6A-53

- Install a wave washer between rocker arm inlet and rocker arm exhaust. (Fig 6A-53)

6. Rockershaft assembly (Intake side)

- Tighten rocker shafts bolts in sequence shown in illustration (Fig. 6A-54).

Torque	N·m (lb·ft)	18 (13)

5. Rockershaft assembly (Exhaust side)

- Tighten rocker shaft bolts in sequence shown in illustration (Fig. 6A-54)

Torque	N·m (lb·ft)	18 (13)

NOTE
When installing the rockershaft assembly to the cylinder head, both of the rocker arm ends should be contacted with each other as shown in Fig. 6A-54.

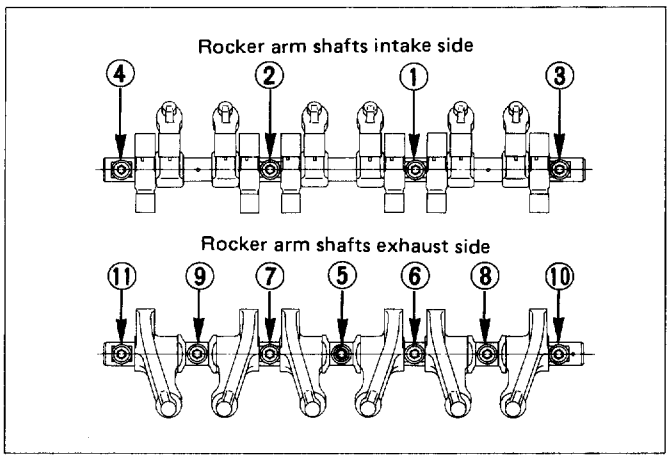

Fig. 6A-54

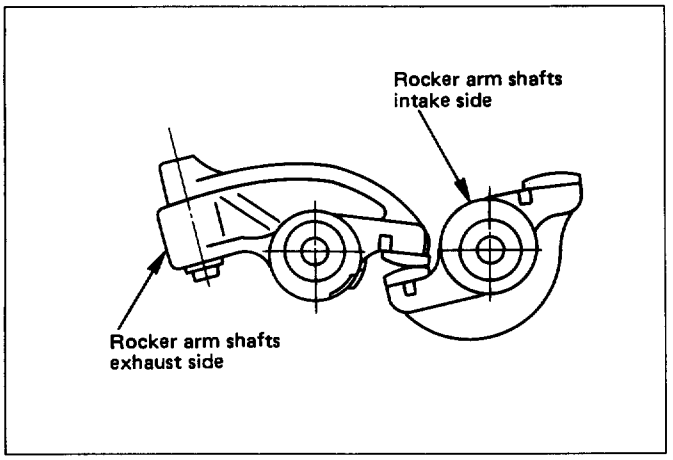

Fig. 6A-55

4. **Camshaft**
   - Refer to "Camshaft installation" in this Section.
3. **Camshaft bracket housing fixing bolts**
   - Refer to "Camshaft installation" in this Section.
2. **Front plate**
1. **Camshaft timing pulley**
   - Refer to "Camshaft installation" in this Section.

OIL PUMP

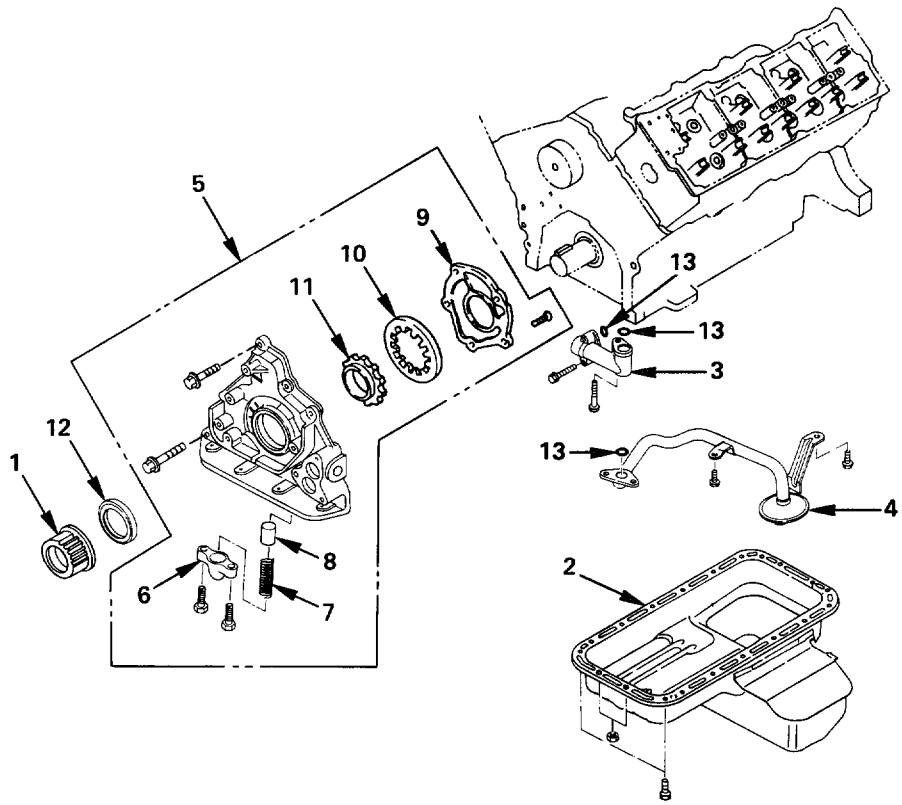

Disassembly steps
1. Crankshaft timing pulley
2. Oil pan
3. Oil pipe
4. Oil strainer
5. Oil pump assembly
6. Plug
7. Spring
8. Relief valve
9. Oil pump cover
10. Driven gear
11. Drive gear
12. Oil seal
13. Rubber ring

Reassembly steps
11. Drive gear
10. Driven gear
9. Oil pump cover
8. Relief valve
7. Spring
6. Plug
5. Oil pump assembly
12. Oil seal
13. Rubber ring
4. Oil strainer
3. Oil pipe
2. Oil pan
1. Crankshaft timing pulley

Fig. 6A-56

DISASSEMBLY

1. **Crankshaft timing pulley**
2. **Oil pan**
3. **Oil pipe**
4. **Oil strainer**
5. **Oil pump assembly**
6. **Plug**
7. **Spring**
8. **Relief valve**
9. **Oil pump cover**
10. **Driven gear**
11. **Drive gear**
12. **Oil seal**
13. **Rubber ring**

INSPECTION AND REPAIR

CAUTION:
Make necessary correction or parts replacement if wear, damage or any other abnormal conditions are found through inspection.

Relief valve (Fig. 6A-57)

- Check to see that the relief valve slides freely.
- The oil pump must be replaced if the relief valve does not slide freely.
- Replace the spring and/or the oil pump assembly if the spring is damaged or badly worn.

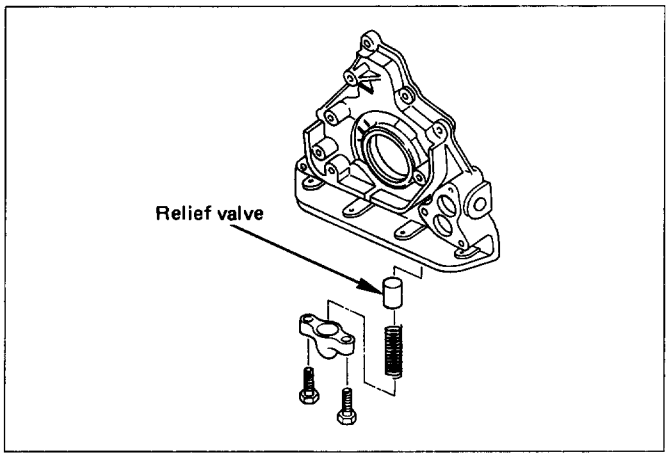

Fig. 6A-57

Body and gears

The pump assembly must be replaced if one or more of the conditions below is discovered during inspection.

- Badly worn or damaged driven gear guide.
- Badly worn driving gear drive face.
- Badly scratched or scored body sliding face or driven gear.
- Badly worn or damaged gear teeth.

Measure the clearance between the body and the driven gear with a feeler gauge (Fig. 6A-58).

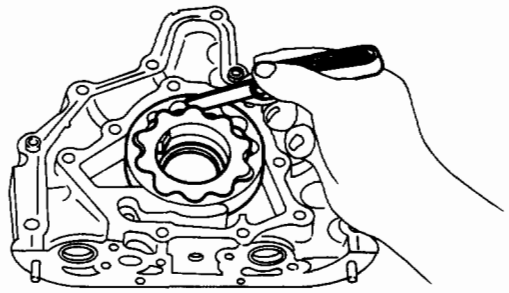

mm (in)

Standard	Limit
0.10-0.18 (0.0039-0.0070)	0.20 (0.0079)

Fig. 6A-58

- Measure the clearance between the drive gear and driven gear with a feeler gauge (Fig. 6A-59).

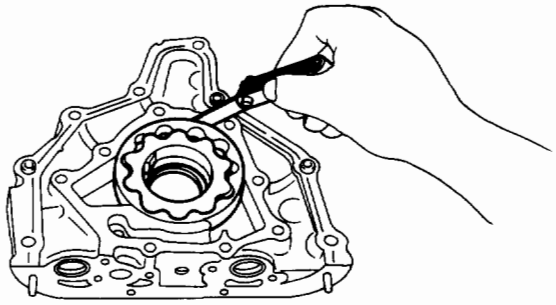

mm (in)

Standard	Limit
0.11-0.24 (0.0043-0.0094)	0.35 (0.0138)

Fig. 6A-59

- Measure the side clearance with a precision straight edge and a feeler gauge (Fig. 6A-60).

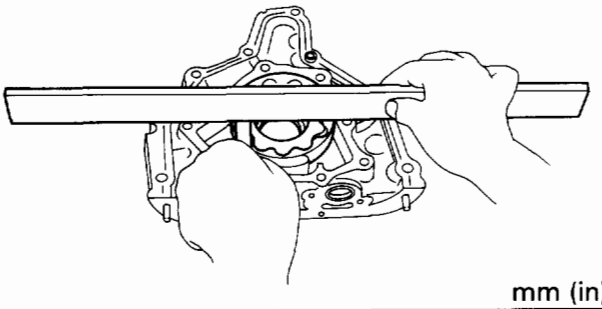

mm (in)

	Standard	Limit
Clearance	0.03-0.09 (0.0011-0.0035)	0.15 (0.0059)

Fig. 6A-60

Oil strainer (Fig. 6A-61)

Check the oil strainer for cracking and scoring.
If cracking and scoring are found, the oil strainer must be replaced.

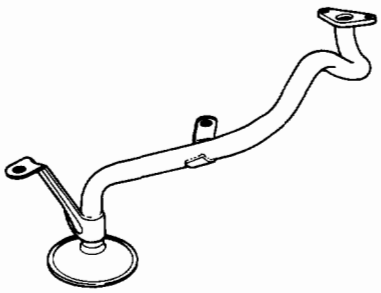

Fig. 6A-61

REASSEMBLY

11. Drive gear

10. Driven gear

9. Oil pump cover

First, loosely tighten all of the attaching screws. Next, tighten the attaching screws to the specified torque.

Torque N·m (lb·in)	10 (87)

After installation, check that the gear rotates smoothly.

8. Relief valve

Apply engine oil to the relief valve and spring.

7. Spring

6. Plug

Install the plug (Fig. 6A-62).

Torque	N·m (lb·in)	8 (69)

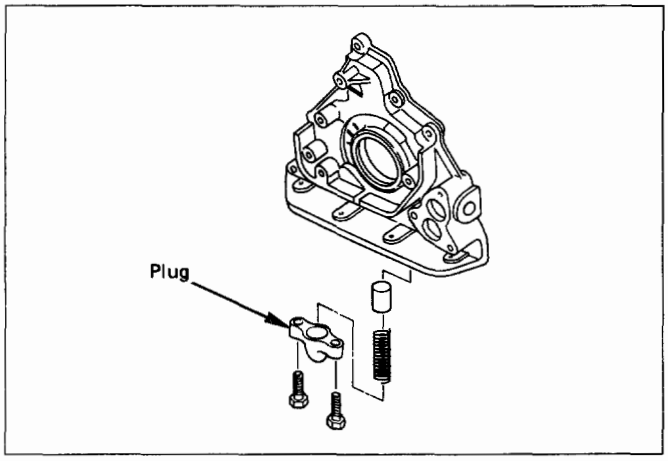

Fig. 6A-62

5. Oil pump assembly

- Carefully remove any oil from the cylinder body and the pump. Apply sealant (TB-1207B or equivalent) to the pump fitting face as shown in Fig. 6A-63.
  Take care that sealant is not applied to oil port surfaces.

CAUTION:
Do not apply an excessive amount of sealant to the contact surface. Applying too much sealant will result in the coating overflowing the contact surfaces. This could cause serious damage to the engine.

- Attach oil pump assembly to cylinder body.
- Remove the seal guide from crankshaft.
- Tighten the oil pump fixing bolts.

Torque	N·m (lb·ft)	18 (13)

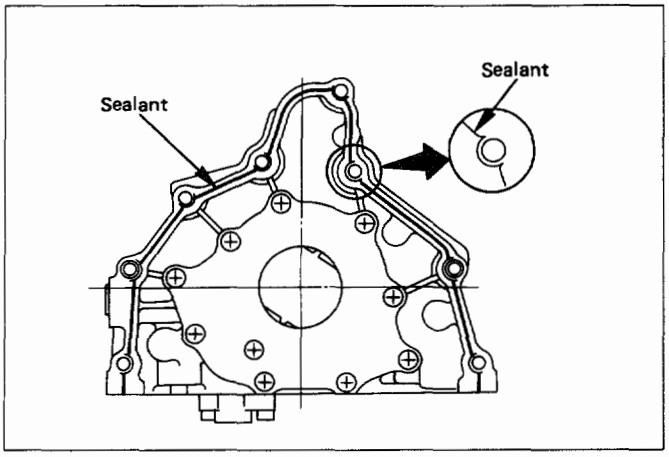

Fig. 6A-63

12. Oil seal (Fig. 6A-64)

Install the new oil seal. Apply engine oil to the oil seal lip after installation.

Installer: J-39202

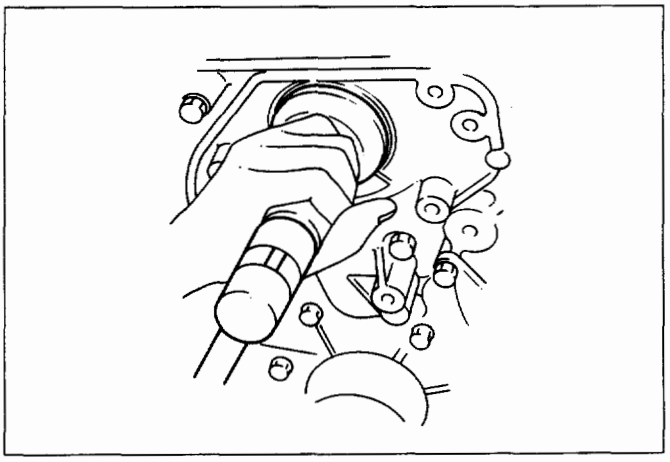

Fig. 6A-64

13. Rubber ring

4. Oil strainer

3. Oil pipe

2. Oil pan

- Refer to "Cylinder block installation" in this Section.

1. Crankshaft timing pulley.

CRANKSHAFT

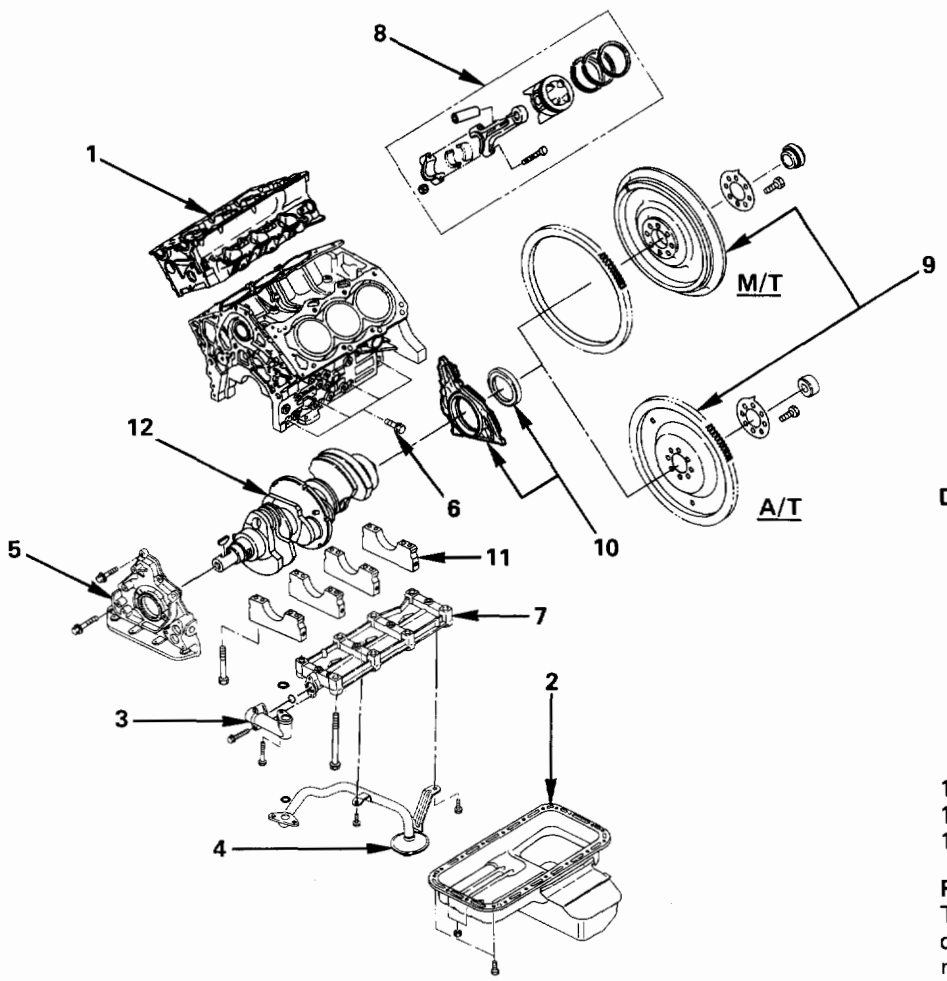

Disassembly steps

1. Cylinder head assembly
2. Oil pan
3. Oil pipe and rubber ring
4. Oil strainer and rubber ring
5. Oil pump assembly
6. Crankcase side bolts
7. Oil gallery
8. Piston and connecting rod assembly
9. Flywheel
10. Rear oil seal retainer
11. Main bearing cap
12. Crankshaft

Reassembly steps

To reassemble, follow the disassembly steps in the reverse order.

Fig. 6A-65

DISASSEMBLY

1. **Cylinder head assembly**
   - Refer to Section 6A1 "Cylinder head removal".
2. **Oil pan**

CAUTION
- Take care not to damage or deform the sealing flange surface of oil pan.
- Refer to Section 6A1 "Oil pan removal".

3. **Oil pipe and rubber ring**
4. **Oil strainer and rubber ring**
5. **Oil pump assembly**
6. **Crankcase side bolts**
7. **Oil gallery**
8. **Piston and connecting rod assembly**
   - Refer to Section 6A1 "Piston and connecting rod Removal".
9. **Flywheel**
10. **Rear oil seal retainer**
11. **Main bearing cap**
12. **Crankshaft**

INSPECTION AND REPAIR

1. **Crankshaft**

Thrust clearance (Fig. 6A-66)

Set the dial indicator as shown in the illustration and measure the crankshaft thrust clearance.
If the thrust clearance exceeds the specified limit, replace the thrust bearings as a set.

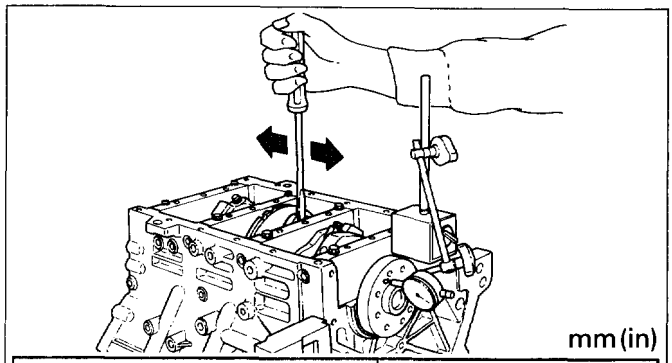

mm(in)

Standard	Limit
0.06-0.24 (0.0023-0.0094)	0.30 (0.0118)

Fig. 6A-66

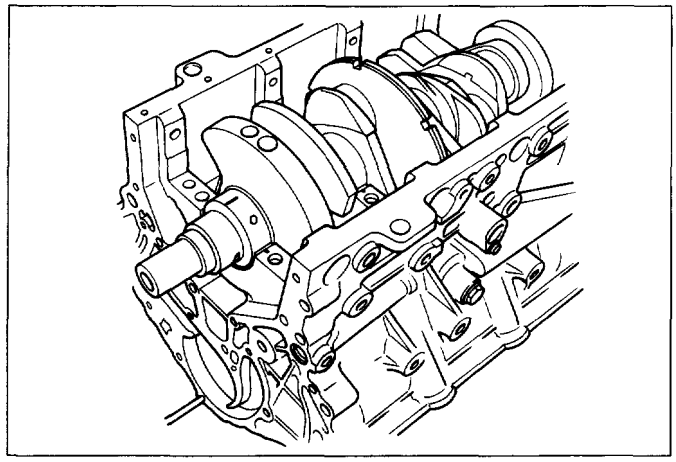

Fig. 6A-68

Main bearing clearance

1. Remove the bearing caps and measure the oil clearance.
2. Remove the main bearing caps in the sequence shown in the illustration (Fig. 6A-67).
   Arrange the removed main bearing caps in the cylinder number order.

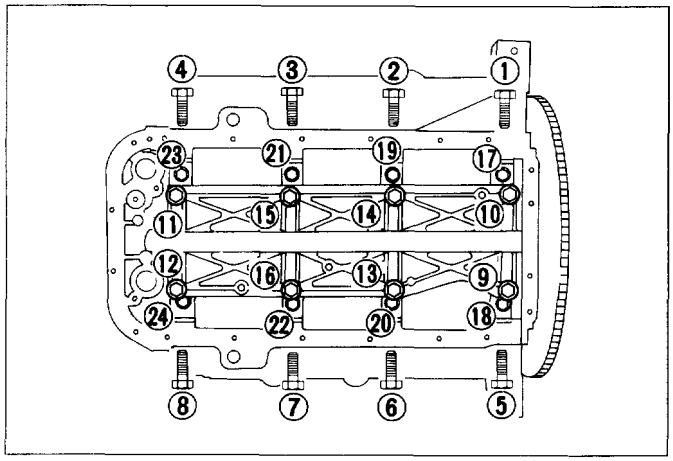

Fig. 6A-67

3. Remove the crankshaft. Remove the main bearings.
4. Clean the upper and lower bearings as well as the crankshaft main journal.
5. Check the bearings for damage or excessive wear.
   The bearings must be replaced as a set if damage or excessive wear is discovered during inspection.
6. Set the upper bearings and the thrust washers to their original positions. Carefully install the crankshaft.
7. Set the lower bearings to the bearing cap original position.
8. Apply plastigage to the crankshaft journal unit as shown in the illustration (Fig. 6A-68).
   NOTE:
   Do not set the plastigage on the oil hole.
9. Install main bearing caps, oil gallery and crank case bolts in the order shown, and tighten each bolt to the specified torque (Fig. 6A-69).
   NOTE:
   Do not apply engine oil to the crank case side bolts.
   - Main bearing caps bolts.

Torque N·m (lb·ft)	39 (29)

   - Oil gallery fixing bolts.

	1st step	2nd step
N·m (lb·ft)	29 (22)	55° ~ 65°

   - Crank case side bolts

Torque N·m (lb·ft)	39 (29)

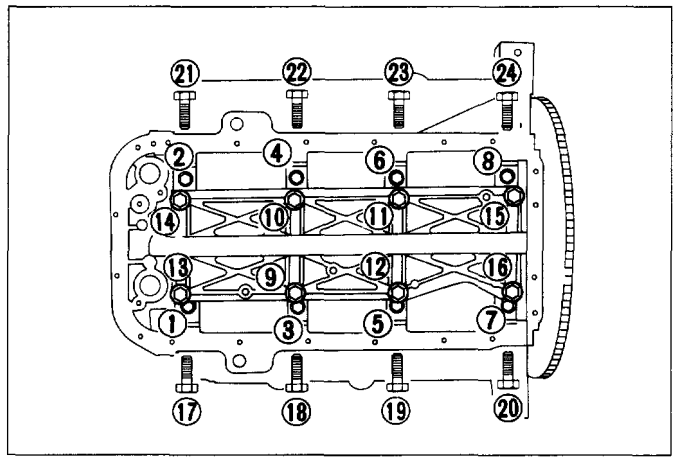

Fig. 6A-69

   NOTE:
   Do not allow the crankshaft to rotate.
10. Remove the main bearing caps in the sequence shown in the illustration (Fig. 6A-67).
11. Measure the plastigage width and determine the oil clearance. If the oil clearance exceeds the specified limit, replace the main bearings as a set and/or replace the crankshaft (Fig. 6A-70).

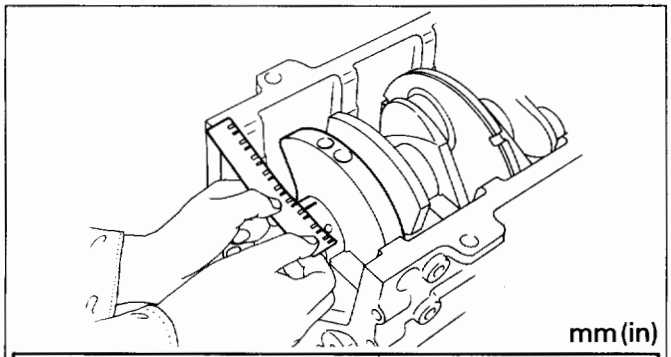

mm(in)

Standard	Limit
0.026-0.049 (0.0010-0.0019)	0.12 (0.0047)

Fig. 6A-70

12. Clean the plastigage from the bearings and the crankshaft.
    Remove the crankshaft and the bearings.

Crankshaft inspection

Inspect the surface of the crankshaft journal and crank pins for excessive wear and damage.
Inspect the oil seal fitting surfaces for excessive wear and damage.
Inspect the oil ports for obstructions.

INSPECTION AND REPAIR

1. Carefully set the crankshaft on the V-blocks.
   Slowly rotate the crankshaft and measure the runout. If the crankshaft runout exceeds the specified limit, the crankshaft must be replaced (Fig. 6A-71).

Runout mm (in)	0.04 (0.0015)

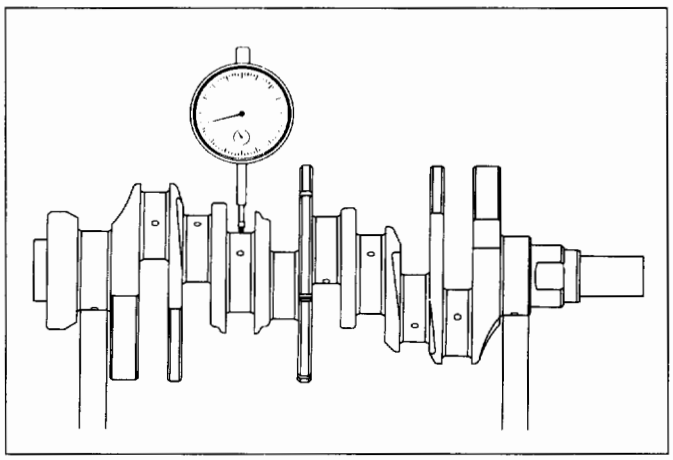

Fig. 6A-71

2. Measure the diameter and the uneven wear of main journal and crank pin (Fig. 6A-72).
   If the crankshaft wear exceeds the specified limit, crankshaft must be replaced.

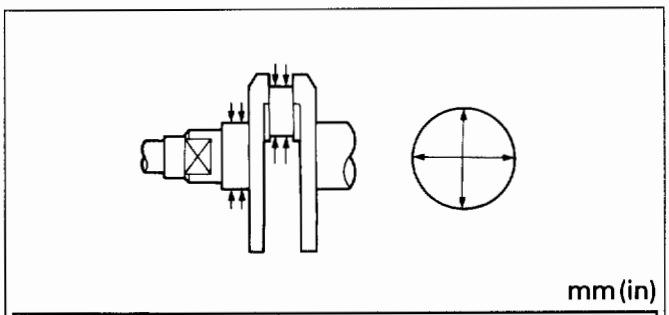

mm(in)

Main journal diameter	63.918-63.933 (2.5165-2.5170)
Crank pin diameter	53.922-53.937 (2.1229-2.1235)
Uneven wear limit	0.005 (0.0002)

Fig. 6A-72

CRANKSHAFT BEARING SELECTION

When installing new crankshaft bearings or replacing bearings, refer to the selection table below.
Select and install the new crankshaft bearings, paying close attention to the cylinder block journal hole ① diameter size mark and the crankshaft journal ② diameter size mark (Fig. 6A-73, Fig. 6A-74).

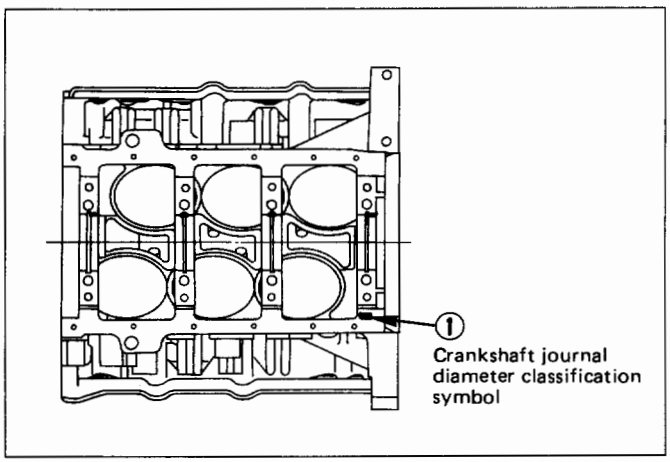

Fig. 6A-73

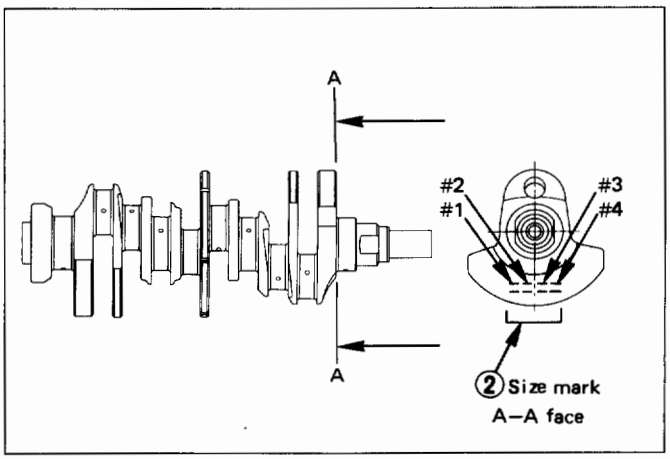

Fig. 6A-74

NOTE:
Take care to ensure the bearings are positioned correctly.

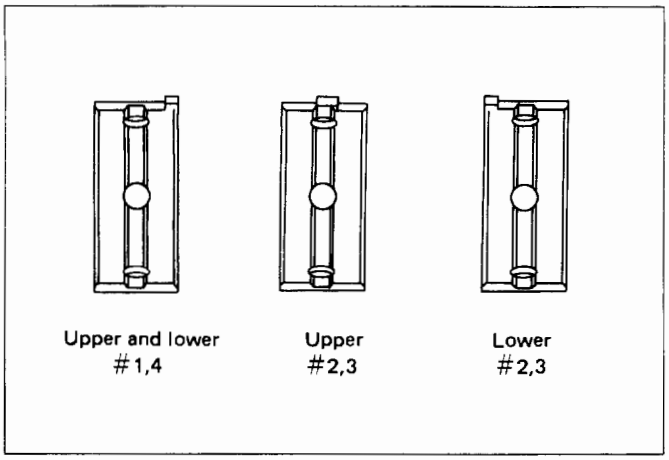

Fig. 6A-75

mm (in)

① Size Mark	Main Bearing Bore Diameter	Crank Shaft Main Journal Diameter	② Size Mark	Crank Shaft Bearing Size Mark (Upper Side)	Crank Shaft Bearing Size Mark (Lower Side)	Oil Clearance (Reference)
1	68.994-69.000 (2.7163-2.7165)	63.918-63.925 (2.5165-2.5167)	2	Brown	Brown	0.030-0.049 (0.0012-0.0019)
		63.926-63.933 (2.5168-2.5170)	1	Green	Green	0.028-0.047 (0.0011-0.0019)
2	68.987-68.993 (2.7160-2.7163)	63.918-63.925 (2.5165-2.5167)	2			0.029-0.048 (0.0011-0.0019)
		63.926-63.933 (2.5168-2.5170)	1	Yellow	Yellow	0.027-0.046 (0.0011-0.0018)
3	68.980-68.986 (2.7157-2.7160)	63.918-63.925 (2.5165-2.5167)	2			0.028-0.047 (0.0011-0.0019)
		63.926-63.933 (2.5168-2.5170)	1	Pink	Pink	0.026-0.045 (0.0010-0.0018)

REASSEMBLY

12. Crankshaft

- Install the main bearings to the cylinder block and the main bearing caps.
- Be sure that they are positioned correctly (Fig. 6A-76).
- Apply new engine oil to the upper and lower main bearing faces.
- Carefully mount the crankshaft.
- Apply engine oil to the thrust washer.
- Assemble the thrust washer to the No.3 bearing journal. The oil grooves must face the crankshaft (Fig. 6A-77).

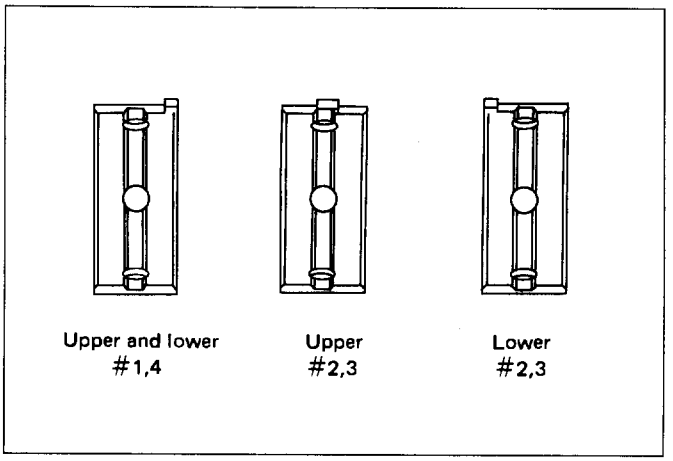

Fig. 6A-76

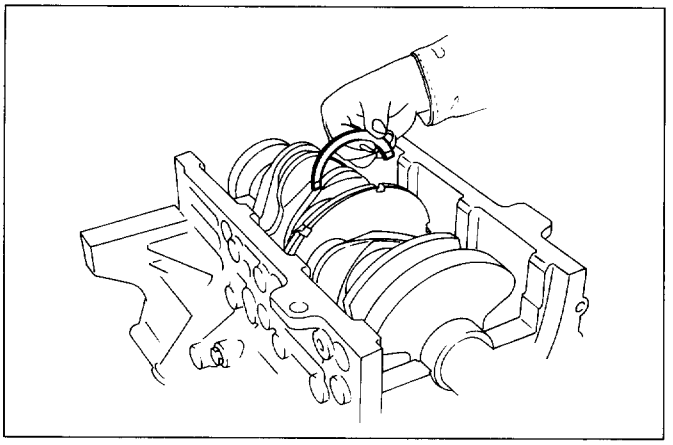

Fig. 6A-77

11. Main bearing cap

- Apply engine oil to the threads and the seating faces of the bolts.
- Install bearing caps in the order shown with the No.1 as the front most bearing cap. (Fig. 6A-78)
- Semi-tighten all of the bolts.
  Finally, tighten all the bolts to specification in the order shown (Fig. 6A-79).

Torque N·m (lb·ft)	39 (29)

After the final tightening, check to see that the crankshaft rotates smoothly.

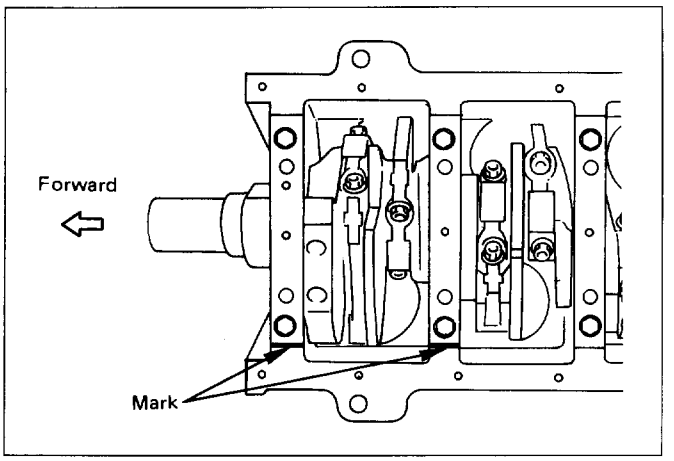

Fig. 6A-78

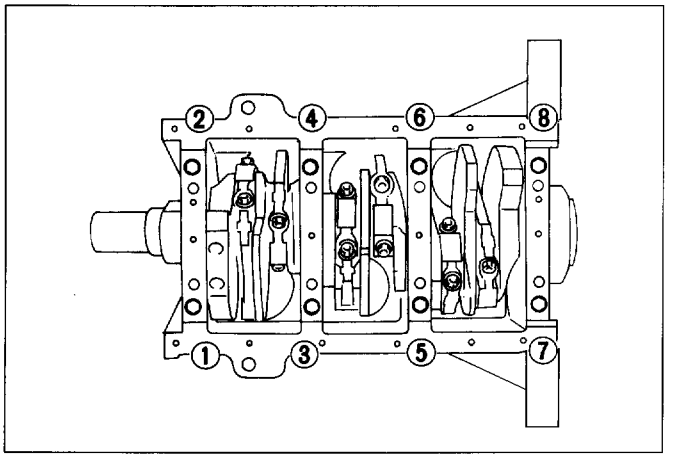

Fig. 6A-79

10. Rear oil seal

- Remove the oil from the cylinder block and the retainer mounting surface.
- Apply sealant (TB-1207B or equivalent) to the retainer mounting surface, following the pattern shown in the illustration (Fig. 6A-80).
- Apply engine oil to the oil seal lip.
- Align the cylinder block dowel pin holes with the rear retainer dowel pins.
- Tighten the rear retainer fixing bolts. New bolts should be used when installing rear retainer.

Torque N·m (lb·ft)	18 (13)

NOTE:
Be very careful not to disengage the oil seal garter spring during installation of the rear retainer.
If the seal was removed from retainer for replacement, apply engine oil to the oil seal lip and install the oil seal using installer (Fig. 6A-81).
Installer: J-39201

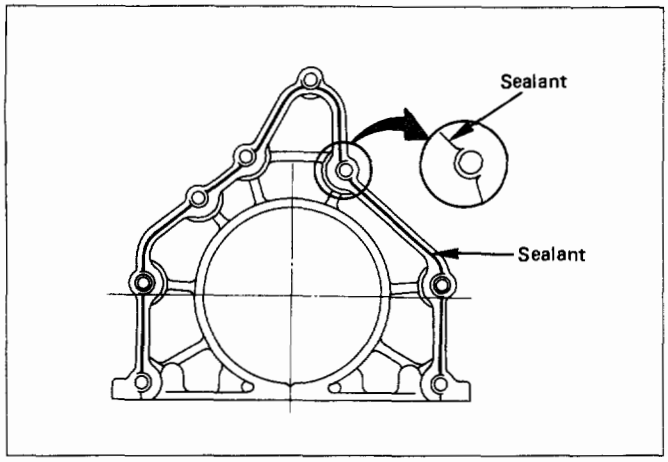

Fig. 6A-80

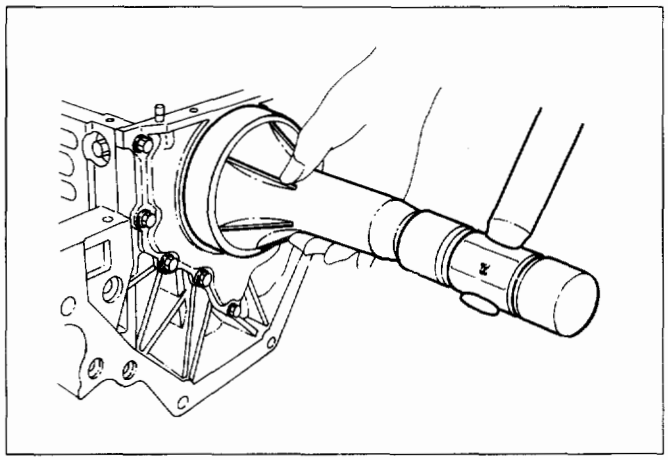

Fig. 6A-81

9. Flywheel

1) Thoroughly clean and remove the oil from the threads of crankshaft.
2) Remove the oil from the crankshaft and flywheel mounting faces.
3) Mount the flywheel on the crankshaft and then install the washer.
4) Hold the crankshaft to prevent from rotating and bolts in the order shown to the specified torque. (Fig. 6A-82)

Torque N·m (lb·ft)	54 (40)

NOTE:
- Do not reuse the bolt.
- Do not apply oil or thread lock to the bolt.

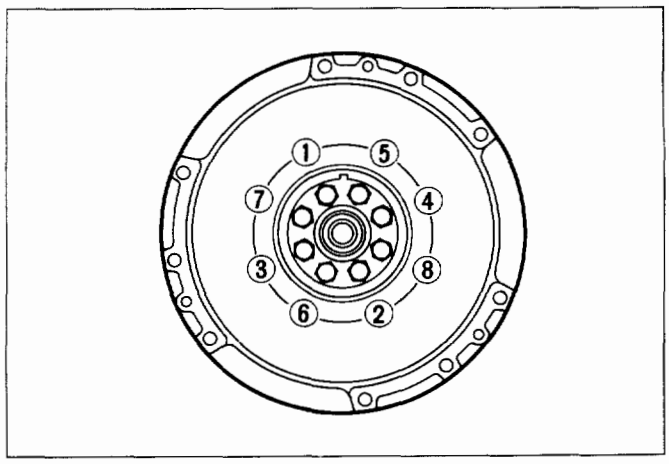

Fig. 6A-82

8. Piston and connecting rod assembly

- Apply engine oil to the cylinder bores, the connecting rod bearings and the crankshaft pins.
  Check to see that the piston ring end gaps are correctly positioned (Fig. 6A-83).
- Insert the piston/connecting rod assemblies into each cylinder with the piston ring compressor.
  The front marks must be facing the front of the engine (Fig. 6A-84).

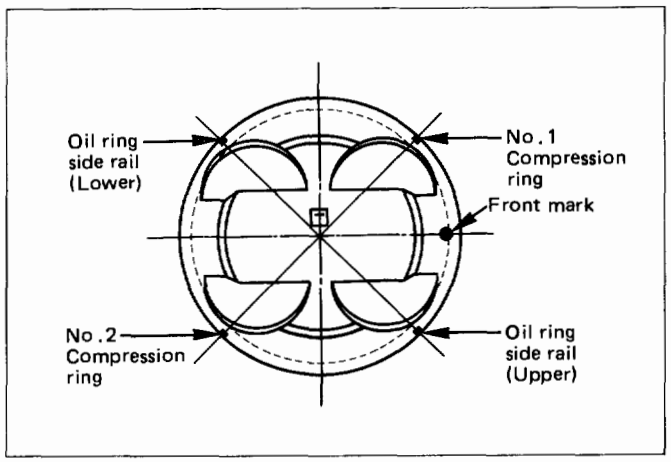

Fig. 6A-83

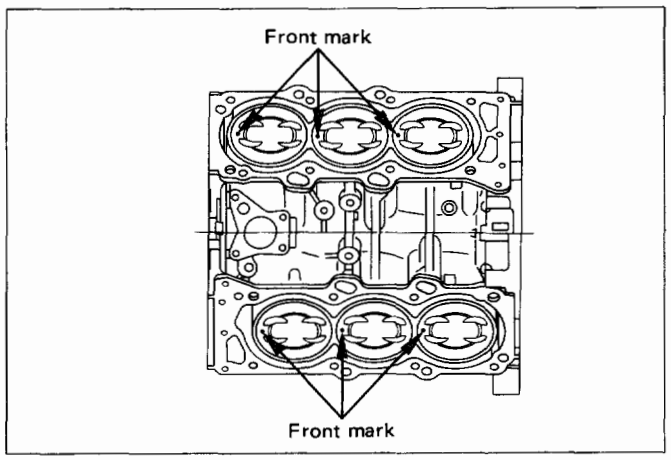

Fig. 6A-84

- Match the numbered caps with the numbers on the connecting rods. Align the punched marks on the connecting rods and caps.
- Apply engine oil to the threads and seating faces of the nuts.
- Tighten the nuts

Torque N·m (lb·ft)	54 (40)

After tightening the cap nuts, check to see that the crankshaft rotates smoothly.

7. Oil gallery

- Tighten the bolts in 2 steps, in the order shown. (Fig. 6A-85)

	1st step	2nd step
N·m (lb·ft)	29 (22)	55° ~ 65°

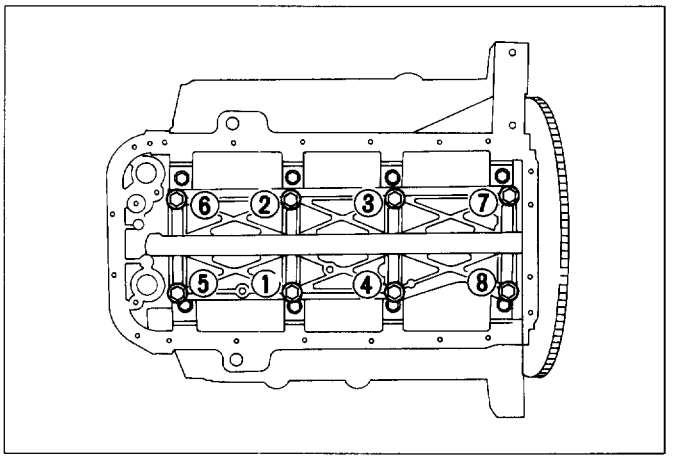

Fig. 6A-85

6. Crankcase side bolts

- Tighten all the bolts to specification in the order shown (Fig. 6A-86).

NOTE:
Do not apply engine oil to the crank case side bolts.

Torque N·m (lb·ft)	39 (29)

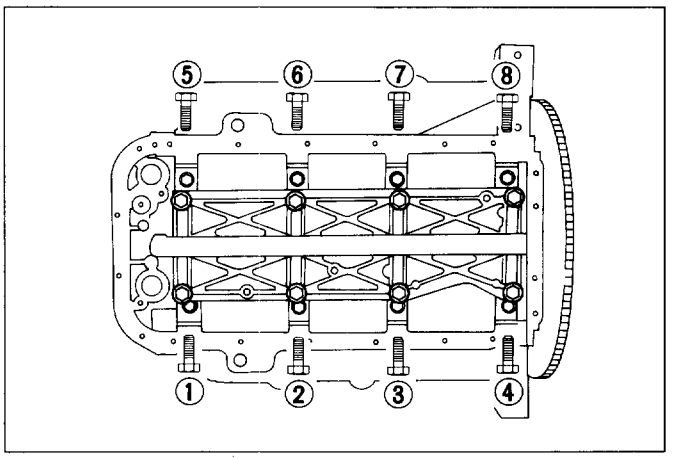

Fig. 6A-86

5. Oil pump assembly

- Refer to "Oil pump installation" in this section.

4. Oil strainer and rubber ring

3. Oil pipe and rubber ring

- Tighten the bolts

Torque N·m (lb·ft)	19 (14)

2. Oil pan

1) Completely remove all residual sealant, lubricant and moisture from the sealing surfaces. The surfaces must be perfectly dry.
2) Apply a correct width bead of sealant (TB-1207C or its equivalent) to the contact surfaces of the oil pan. There must be no gaps in the bead (Fig. 6A-87).
3) The oil pan must be installed within 5 minutes after sealant application.
4) Tighten the bolts and nuts to the specified torque.

Torque N·m (lb·in)	10 (87)

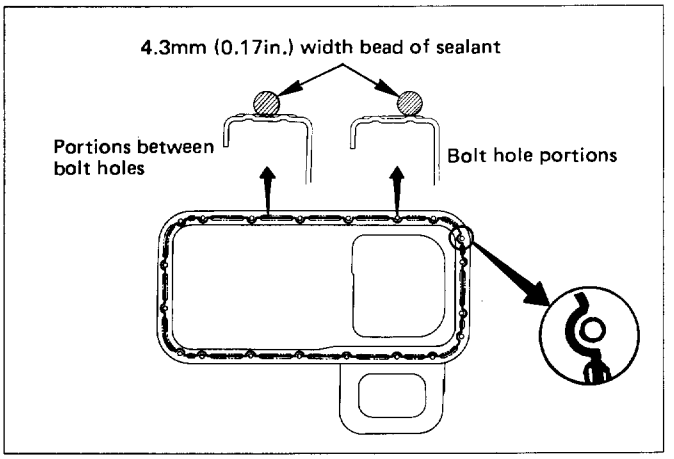

Fig. 6A-87

1. Cylinder head assembly

- Refer to Section 6A1 "Cylinder head assembly installation".

PISTON AND CONNECTING ROD

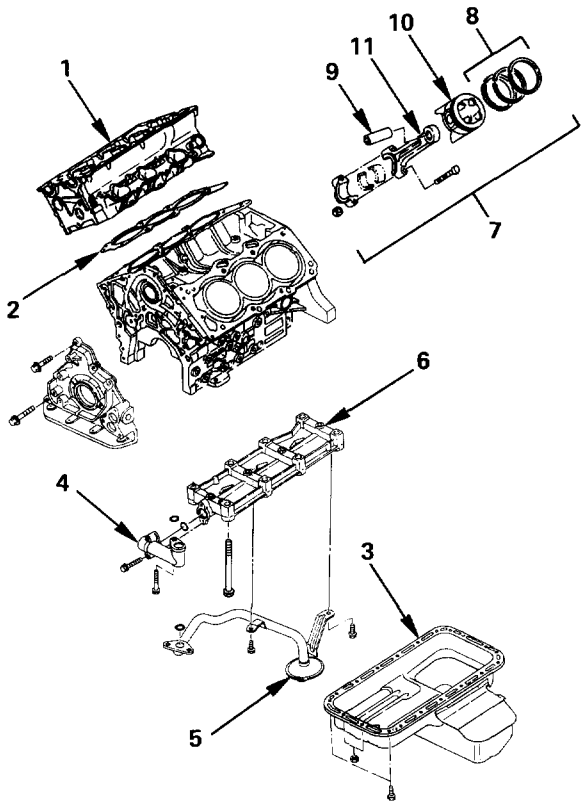

Disassembly steps
1. Cylinder head assembly
2. Cylinder head gasket
3. Oil pan
4. Oil pipe and rubber ring
5. Oil strainer and rubber ring
6. Oil gallery
7. Piston and connecting rod assembly
8. Piston ring
9. Piston pin
10. Piston
11. Connecting rod

Reassembly steps
To reassemble, follow the disassembly steps in the reverse order.

Fig. 6A-88

DISASSEMBLY

1. **Cylinder head assembly.**
   - Refer to Section 6A1 "Cylinder head Removal".
2. **Cylinder head gasket**
3. **Oil pan**
   - Refer to Section 6A1 "Oil pan Removal".
4. **Oil pipe and rubber ring**
5. **Oil strainer and rubber ring**
6. **Oil gallery**
7. **Piston and connecting rod assembly**

   NOTE:
   Before removing piston and connecting rod assembly, measure thrust clearance (page 6A-33).
   - Remove any ridge or carbon build up from the top end of the cylinder.
8. **Piston ring (Fig. 6A-89)**
   - Remove the piston rings with a piston ring expander.
     Arrange the removed piston rings in the cylinder number order.

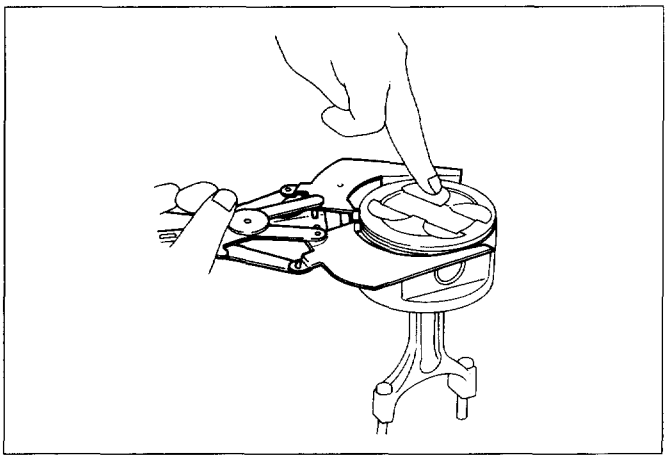

Fig. 6A-89

9. **Piston pin (Fig. 6A-90)**
   - Remove the piston pin using a piston pin service set and piston support with a press.

Piston pin service set: J-24086-C

NOTE:
Keep the parts removed from each cylinder separate. All parts must be reinstalled in their original positions. Heating the connecting rod will permit easy removal of the piston pin.

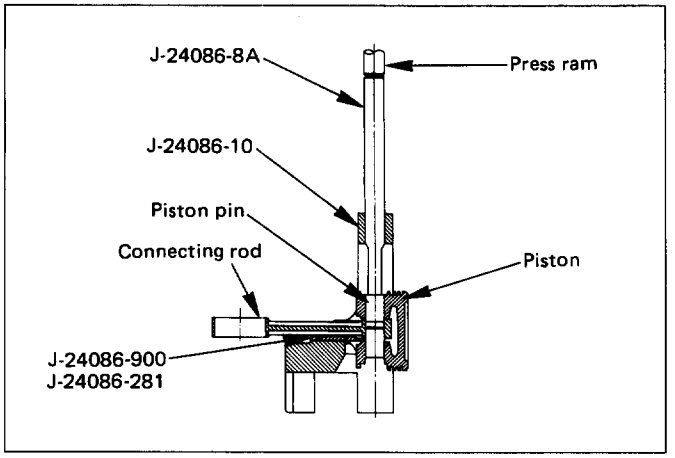

Fig. 6A-90

10. Piston

11. Connecting rod

INSPECTION AND REPAIR

PISTON AND PISTON RING

Pistons

Carefully clean away all the carbon adhering to the piston head and the piston ring grooves.

NOTE:

Never use a wire brush to clean the pistons. Damage will result.

Visually check each piston for cracking, scoring, and other signs of excessive wear.

If any of the above conditions are present, the piston must be replaced.

Piston Diameter

1. Measure the piston outside diameter with micrometer at the piston grading position and a right angle to the piston pin (Fig. 6A-91).
   Piston grading position (from piston head)

Piston grading position mm (in)	31.0 (1.2204)

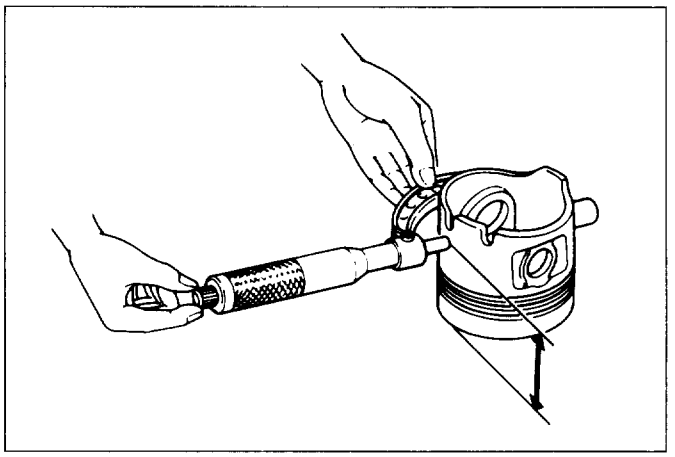

Fig. 6A-91

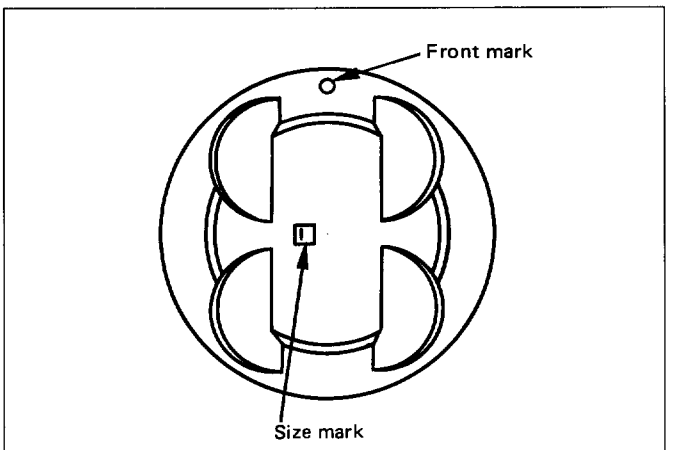

Size Mark	Outside Diameter mm(in)
A	93.350-93.360 (3.6752-3.6756)
B	93.361-93.370 (3.6756-3.6760)
C	93.371-93.380 (3.6760-3.6764)

Fig. 6A-92

The size mark for piston outside diameter is represented by the "G" as shown in Figure. (Fig. 6A-92)

Measure the cylinder bore inside diameter (refer to "Inspection of the Cylinder Block" in this Section) (Fig. 6A-93).

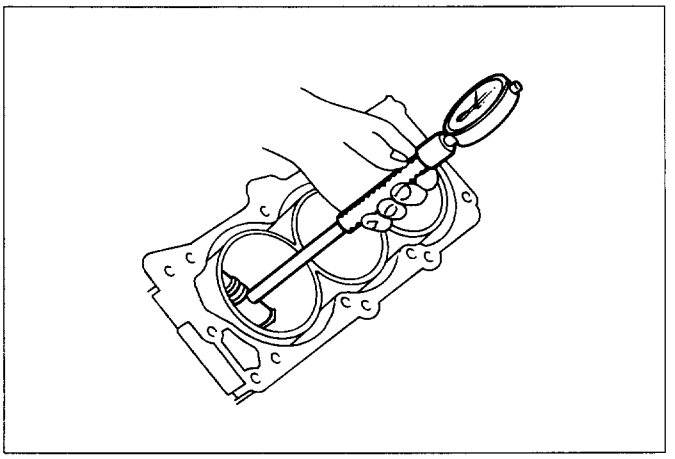

Fig. 6A-93

Piston rings

Any worn or damaged part discovered during engine overhaul must be replaced with a new one.

1. Ring end gap measurement
   - Insert the piston ring into the bore (Fig. 6A-94).
   - Push the ring by the piston, at a right angle to the wall, into the point at which the cylinder bore diameter is the smallest.
   - Measure the ring end gap.
   - Positioning mark is painted as shown in the illustration (Fig. 6A-95).

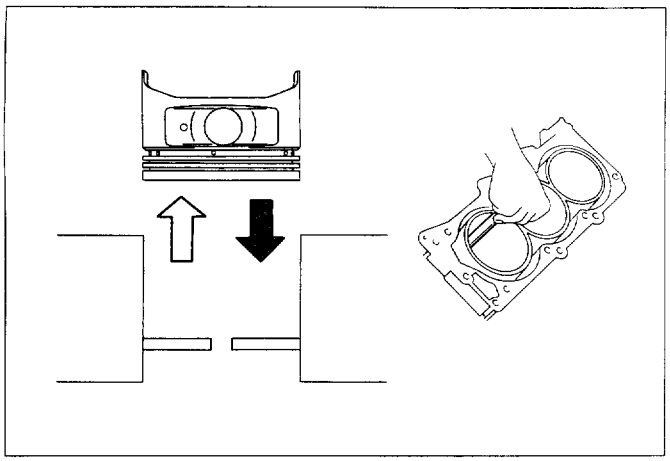

Fig. 6A-94

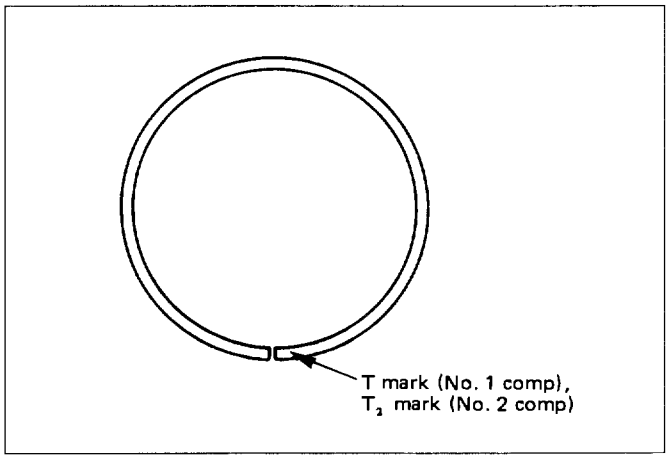

Fig. 6A-95

mm (in)

		Standard	Limit
Compression ring	1st	0.350-0.470 (0.0138-0.0185)	1.5 (0.0590)
	2nd	0.450-0.600 (0.0177-0.0236)	1.5 (0.0590)
Oil ring		0.150-0.450 (0.0059-0.0177)	1.5 (0.0590)

2. Measure the clearance between the piston ring groove and the piston ring with a feeler gauge. If the piston ring groove/piston ring clearance exceeds the specified limit, the piston must be replaced (Fig. 6A-96).

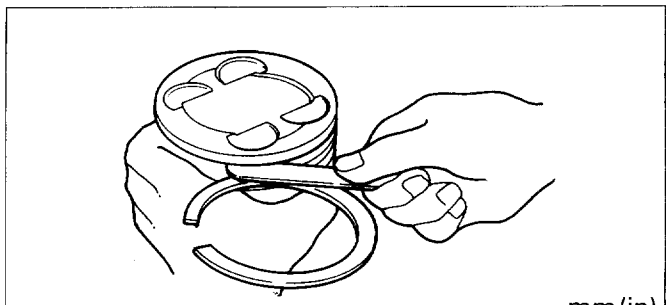

mm (in)

	Standard	Limit
Clearance compression ring	0.016-0.038 (0.0006-0.0015)	0.15 (0.0059)

Fig. 6A-96

Piston pin

NOTE:

Do not reuse the old piston pin.

1. Use a micrometer to measure the new piston pin outside diameter in both directions at three different positions. (Fig. 6A-97).

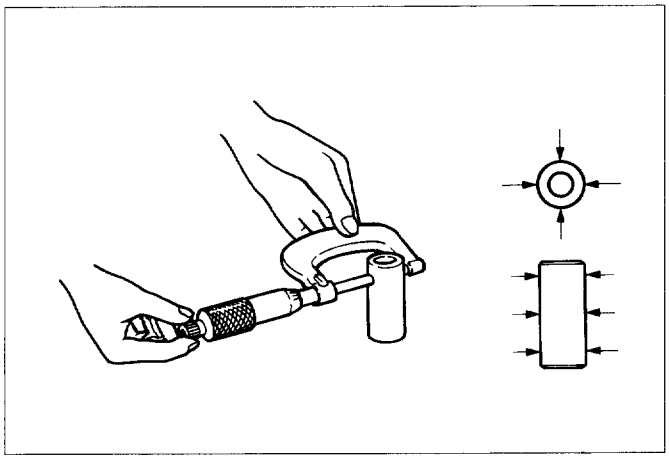

Fig. 6A-97

2. Measure the inside diameter of the connecting rod small end. If the fitting interference between the small end and pin does not conform to the specified value, the connecting rod must be replaced.

Standard mm (in)	0.020-0.041 (0.0008-0.0016)

3. Insert the new pin into the piston and rotate it. If the pin rotates smoothly with no backlash, the clearance is normal. If there is backlash or roughness, measure the clearance. If the clearance exceeds the specified limit, the piston must be replaced.

mm (in)

	Standard	Limit
Clearance	0.007-0.020 (0.0003-0.0008)	0.040 (0.0016)

Connecting rods

1. Check the connecting rod alignment (Fig. 6A-98). If either the bend or the twist exceeds the specified limit, the connecting rod must be replaced.

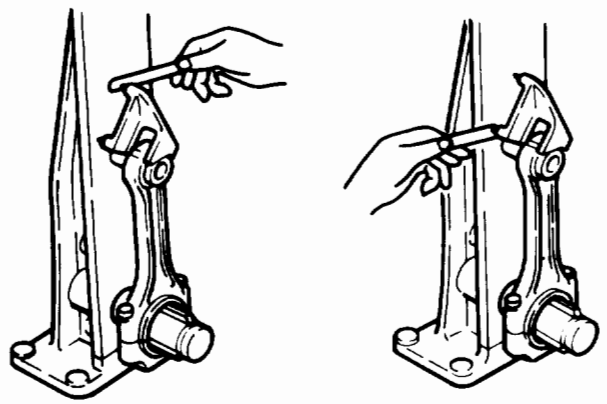

mm (in)

Standard	Limit
Bend per 100 mm (3.937 in)	0.15 (0.0059)
Twist per 100 mm (3.937 in)	0.20 (0.0078)

Fig. 6A-98

2. Measure the connecting rod thrust clearance.
   Use a feeler gauge to measure the thrust clearance at the big end of the connecting rod (Fig. 6A-99).
   If the clearance exceeds the specified limit, the connecting rod must be replaced.

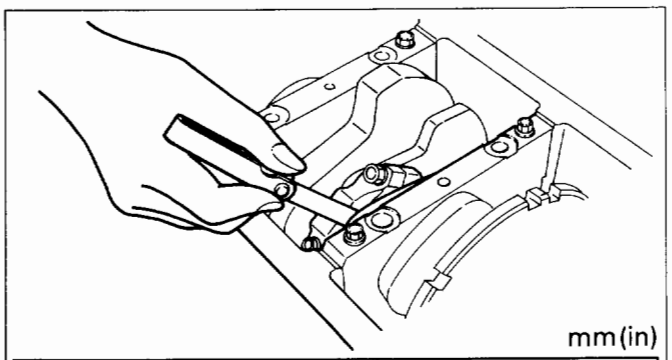

mm (in)

Standard	Limit
0.16-0.35 (0.0063-0.0138)	0.40 (0.0157)

Fig. 6A-99

3. Measure the oil clearance between the connecting rod and the crankshaft by:
   1) Remove the connecting rod cap nuts and the rod caps.
      Arrange the removed rod caps in the cylinder number order.
   2) Clean the rod bearings and the crankshaft pins.
   3) Carefully check the rod bearings.
      If even one bearing is found to be damaged or badly worn, the entire bearing assembly must be replaced as a set. Reinstall the bearings in their original positions.
      Apply plastigage to the crank pin (Fig. 6A-100).

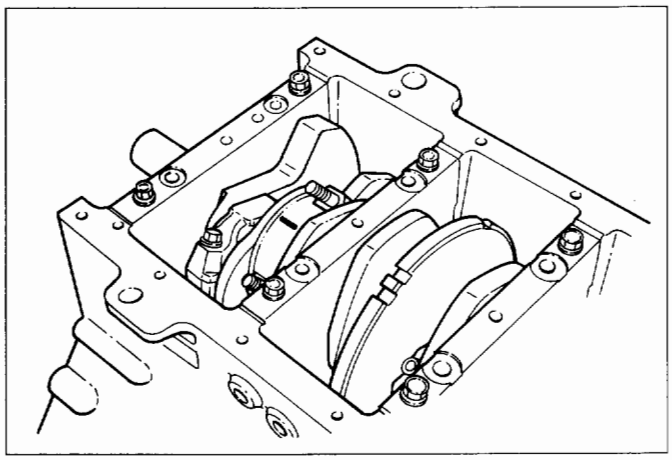

Fig. 6A-100

   4) Reinstall the rod caps to their original positions.

Tighten the rod caps.

Torque N·m (lb·ft)	54 (40)

NOTE:
Do not allow the crankshaft to rotate.

5) Remove the rod caps.
6) Measure the width of the plastigage and determine the oil clearance. If the oil clearance exceeds the limit, replace the rod bearing as a set (Fig. 6A-101).

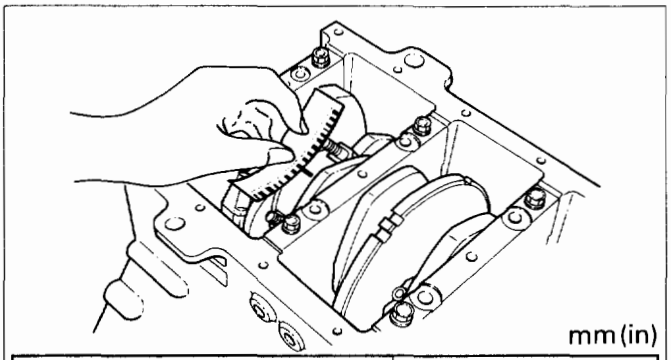

mm (in)

Standard	Limit
0.025-0.058 (0.0010-0.0023)	0.12 (0.0047)

Fig. 6A-101

7) Clean the plastigage from the bearings and the crankshaft pins.

Con-rod bearing selection (Fig. 6A-102)
Select the install the new connecting rod bearings, paying close attention to the connecting rod big end diameter size mark.

NOTE:
Take care not to confuse the alignment mark and the size mark during the installation procedure.

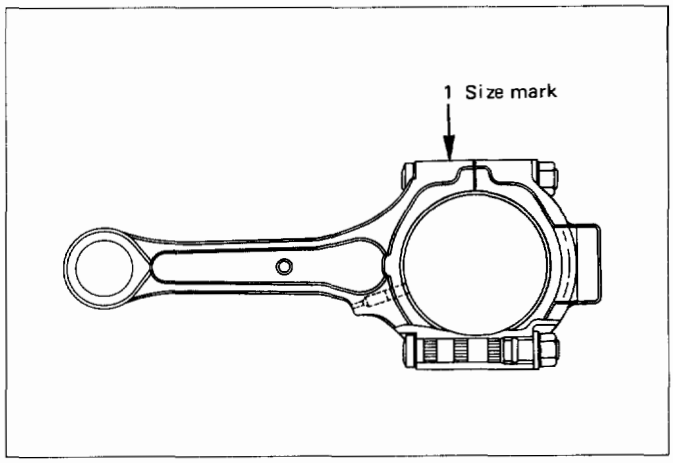

Fig. 6A-102

mm (in)

1 Size Mark	Big end Bore Diameter	Crankshaft Pin Diameter	Connecting Rod Bearing Thickness (Reference)	Color of Size Mark	Oil Clearance
A	56.994-57.000 (2.2439-2.2441)	53.922-53.937 (2.1229-2.1235)	1.512-1.516 (0.0595-0.0597)	Yellow	0.025-0.054 (0.0010-0.0021)
B	56.988-56.994 (2.2436-2.2439)		1.508-1.512 (0.0594-0.0595)	Green	0.027-0.056 (0.0011-0.0022)
C	56.982-56.988 (2.2434-2.2436)		1.504-1.508 (0.0592-0.0594)	Pink	0.029-0.058 (0.0011-0.0023)

REASSEMBLY

11. Connecting-rod

10. Piston

9. Piston pin

- Apply a thin coat of engine oil to the piston pin. Try to insert the piston pin into the piston pin hole with normal finger pressure.

NOTE:
- When changing piston/connecting rod combinations, do not change the piston/piston pin combination.
  Take care to ensure the difference piston parts between SOHC and DOHC engine. (Fig. 6A-103)
- Do not reuse the old piston pin.

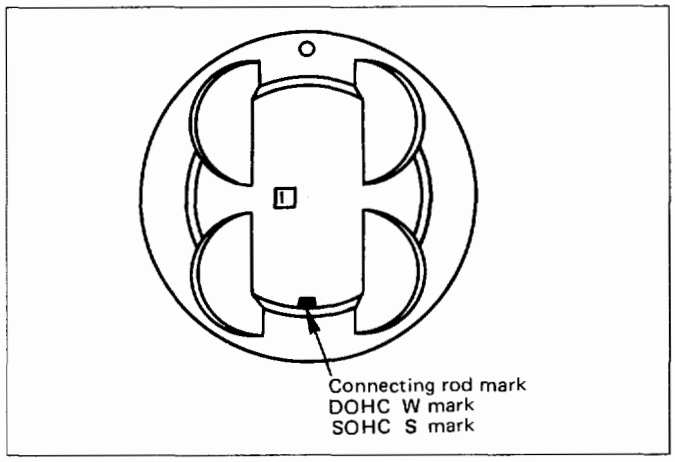

Fig. 6A-103

- Attach the piston to the connecting rod with the piston front mark and the connecting rod mark on the same side (Fig. 6A-104).

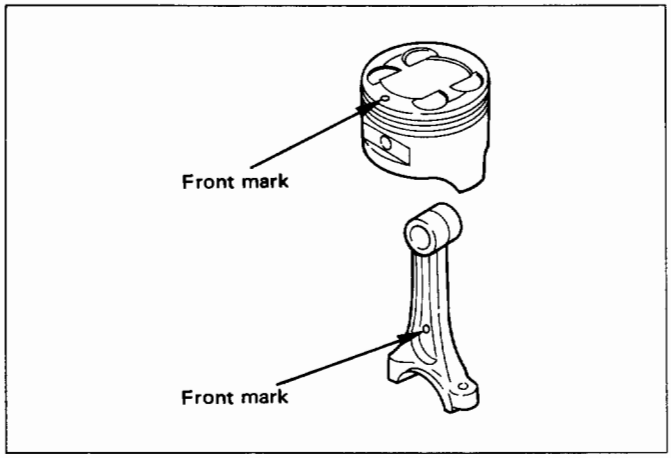

Fig. 6A-104

- With special tool and a press, press fit the piston pin (Fig. 6A-105).

Piston pin service set: J-24086-C

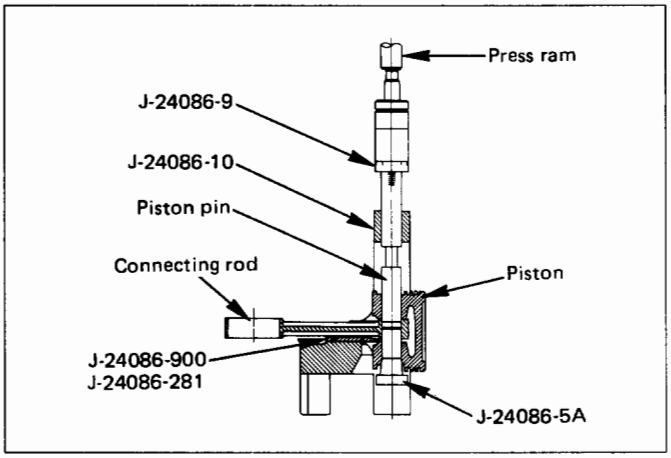

Fig. 6A-105

NOTE:
Heat the connecting rod small end to a suitable temperature to ensure smooth installation.

8. Piston ring

- Install the piston rings with the piston ring expander.
  The compression ring must be set with the T mark facing up (Fig. 6A-106).

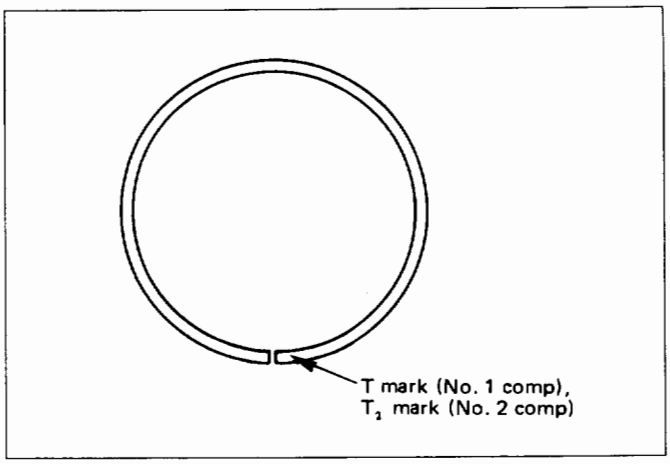

Fig. 6A-106

- Install piston rings in the following sequence.

1. **Oil ring**
   ① Expander ring
   ② Upper side rail
   ③ Lower side rail
2. **2nd Compression ring**
3. **1st compression ring**
   - The compression rings must be set with the T or T2 mark facing up. (Fig. 6A-107).
     - 1st compression ring: T
     - 2nd compression ring: T2
   - After installation, apply engine oil to the entire circumference of the piston rings.
     Check to see that all the rings rotate smoothly.

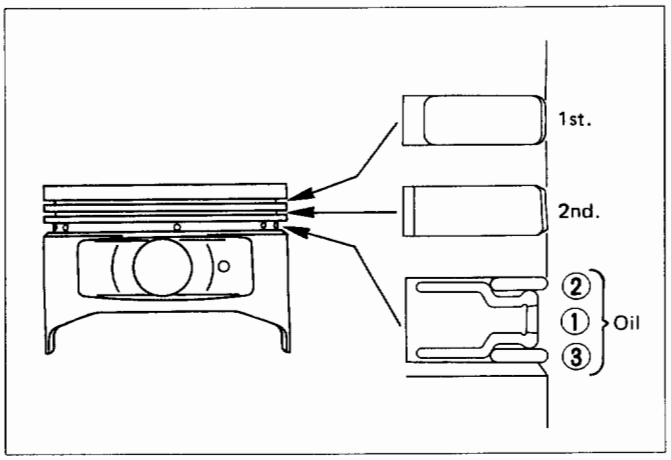

Fig. 6A-107

7. Piston and connecting rod assembly

- Insert the bearings into the connecting rods and caps.
  Apply new engine oil to the bearing faces and nuts.
- Tighten the connecting rod cap nuts

Torque N·m (lb·ft)	54 (40)

NOTE:
- Do not apply engine oil to the bearing back faces and connecting rod bearing fitting surfaces.

6. **Oil gallery**
   - Refer to Section 6A1 "Crankshaft and main bearing" installation.
5. **Oil strainer and rubber ring**
4. **Oil pipe and rubber ring**
3. **Oil pan**
   - Refer to Section 6A1 "Oil pan installation".
2. **Cylinder head gasket**
1. **Cylinder head assembly**
   - Refer to section 6A1 "Cylinder head assembly installation".

CYLINDER BLOCK

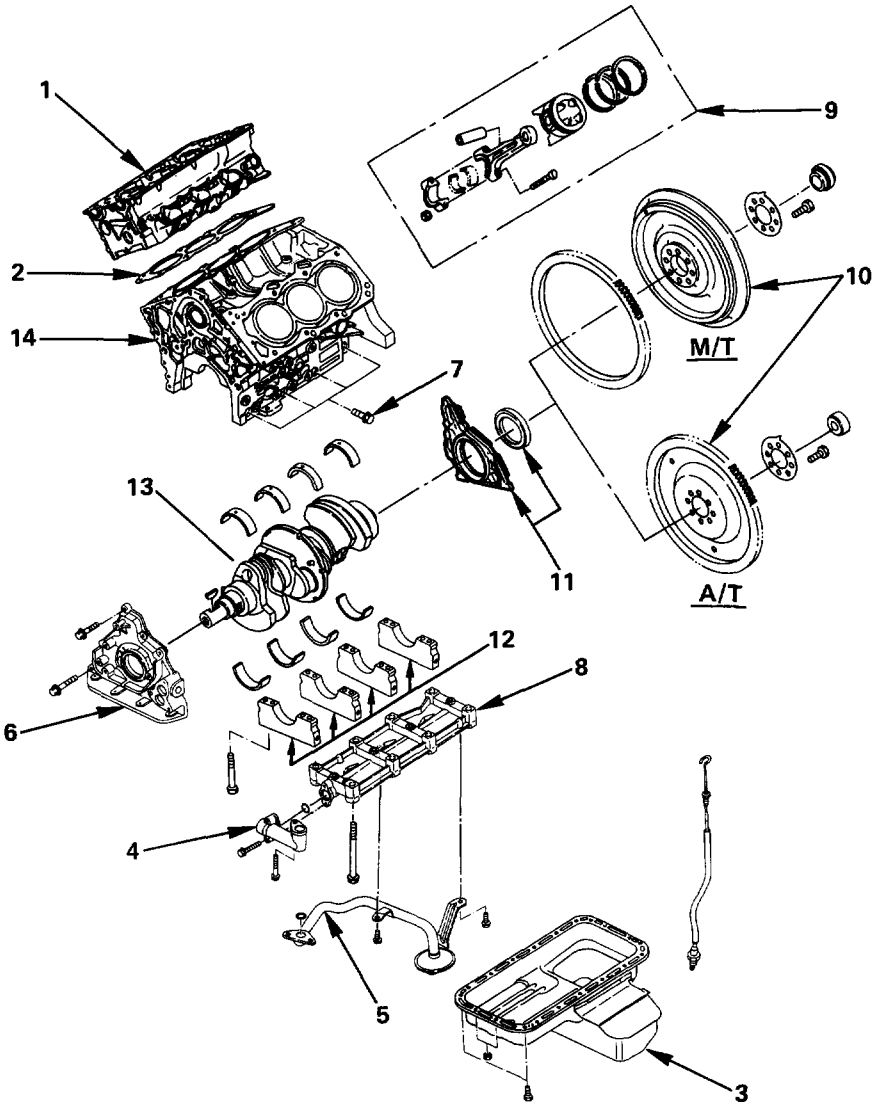

Disassembly steps

1. Cylinder head assembly
2. Cylinder head gasket
3. Oil pan
4. Oil pipe and rubber ring
5. Oil strainer and rubber ring
6. Oil pump assembly
7. Crankcase side bolts
8. Oil gallery
9. Piston and connecting rod assembly
10. Flywheel
11. Rear oil seal assembly
12. Main bearing cap
13. Crankshaft
14. Cylinder block

Reassembly steps

To reassemble, follow the disassembly steps in the reverse order.

Fig. 6A-108

DISASSEMBLY

1. **Cylinder head assembly**
2. **Cylinder head gasket**
3. **Oil pan**
4. **Oil pipe and rubber ring**
5. **Oil strainer and rubber ring**
6. **Oil pump assembly**
7. **Crankcase side bolts**
8. **Oil gallery**
9. **Piston and connecting rod assembly**
10. **Flywheel**
11. **Rear oil seal assembly**
12. **Main bearing cap**
13. **Crankshaft**
14. **Cylinder block**

INSPECTION AND REPAIR

1. Remove the gasket and any other material adhering to the upper surface of the cylinder block.

   Be very careful not to allow any material to accidentally drop into the cylinder block.
   Be very careful not to scratch the cylinder block.
2. Carefully remove the oil pump, rear oil seal retainer, and oil pan installation surface seal.
3. Wipe the cylinder block clean.
4. Visually inspect the cylinder block.
   If necessary, use a flaw detector to perform a dye penetrate and hydraulic (or air pressure) test.
   If cracking or other damage is discovered, the cylinder block must either be repaired or replaced.

Flatness

1. Using a straight-edge and feeler gauge, check that the upper surface of the cylinder block is not warped (Fig. 6A-109)

CAUTION:
Be very careful not to allow any material to accidentally drop into the upper surface of the cylinder block.
Be very careful not to seratch the upper surface of the cylinder block.

2. The cylinder block must be reground or replaced if the warpage exceeds the limit.

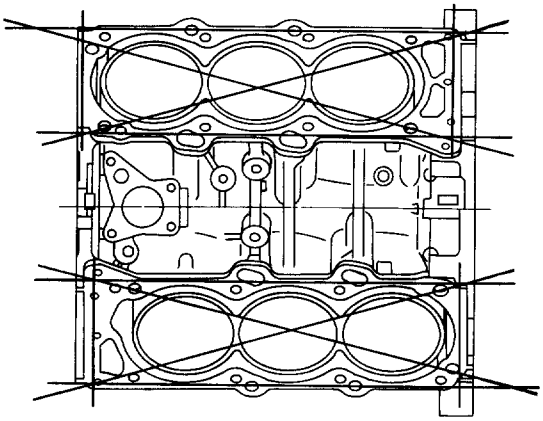

mm(in)

	Limit	Maximum repairable limit
Warpage	0.15 (0.0059)	0.15 (0.0059)

Fig. 6A-109

CYLINDER BORE

Use a cylinder gauge to measure the cylinder bore diameter in both the axial and thrust directions.
Each measurement should be made at six points (Fig. 6A-110).

CAUTION:
Be very careful not to allow any material to accidentally drop into the upper surface of the cylinder block.
Be very careful not to scratch the upper surface of the cylinder block.

mm(in)

	Limit
Cylinder bore inside diameter	93.530 (3.6823)

If the measurement exceed the specified limit, the cylinder block must be replaced.

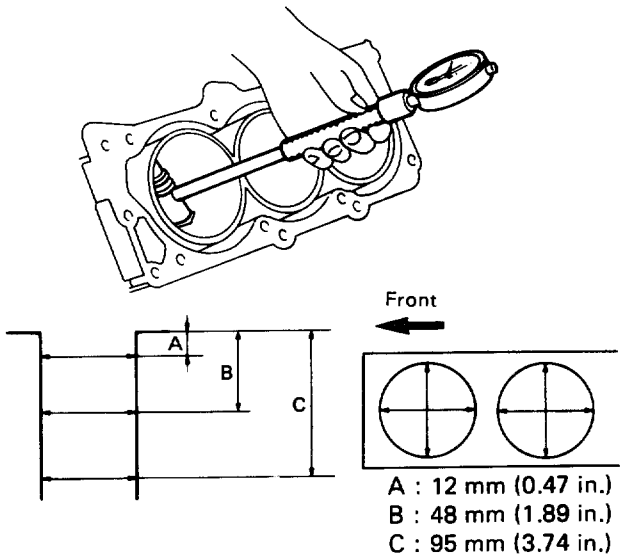

mm(in)

Grade	Diameter
A	93.400-93.410 (3.6772-3.6776)
B	93.411-93.420 (3.6776-3.6779)
C	93.421-93.430 (3.6780-3.6783)

Fig. 6A-110

NOTE:
For information on piston diameter, please refer to the section "Inspection of the Piston and Connecting Rod Assembly" in this manual.

- The "Grade" mark is stamped at the position illustrated in Fig. 6A-111.

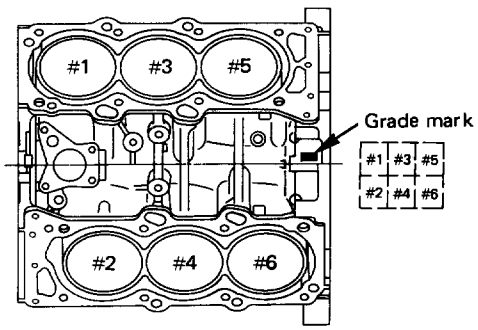

Fig. 6A-111

REASSEMBLY

14. Cylinder block

13. Crankshaft

- Install the main bearings to the cylinder block and the main bearing caps (Fig. 6A-112).
- Be sure that they are positioned correctly.
- Apply new engine oil to the upper and lower main bearing faces.
- Carefully mount the crankshaft.
- Apply engine oil to the thrust washer.
- Assemble the thrust washer to the No. 3 bearing journal. The oil grooves must face the crankshaft (Fig. 6A-113).

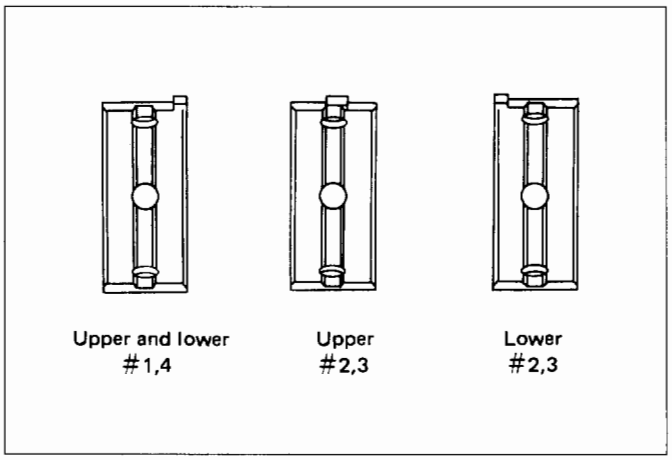

Fig. 6A-112

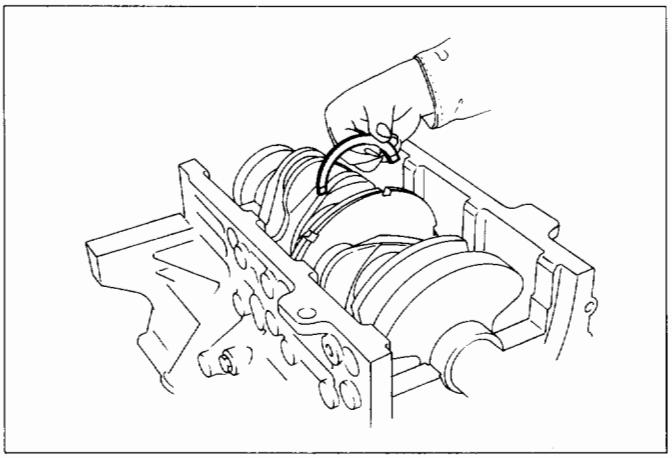

Fig. 6A-113

12. Crankshaft bearing cap

- Apply engine oil to the threads and the seating faces of the bolts.
- Install bearing caps in the order shown with the No.1 as the front most bearing cap (Fig. 6A-114)
- Semitighten all of bolts. Finally, tighten all the bolts to specification in the order shown (Fig. 6A-115)

Torque N·m (lb·ft)	39 (29)

After the final tightening, check to see that the crankshaft rotates smoothly.

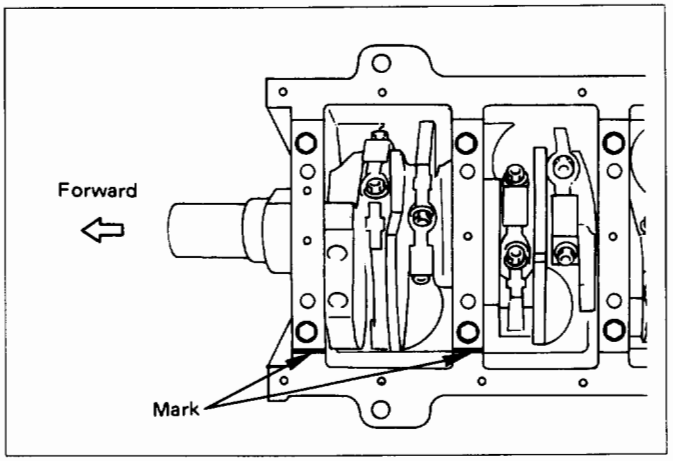

Fig. 6A-114

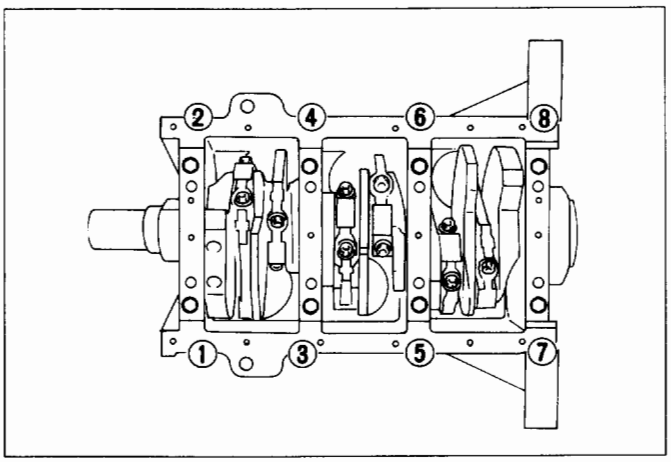

Fig. 6A-115

11. Rear oil seal assembly

- Tighten all the bolts.

Torque N·m (lb·ft)	18 (13)

10. Flywheel

1) Thoroughly clean and remove the oil from the threads of crankshaft.
2) Remove the oil from the crankshaft and flywheel mounting faces.
3) Mount the flywheel on the crankshaft and then install the washer.
4) Holding the crankshaft stationary, tighten the flywheel bolts in the order shown (Fig. 6A-116).

Torque N·m (lb·ft)	54 (40)

NOTE:

- Do not reuse the bolts.
- Do not apply oil or thread lock to the bolts.

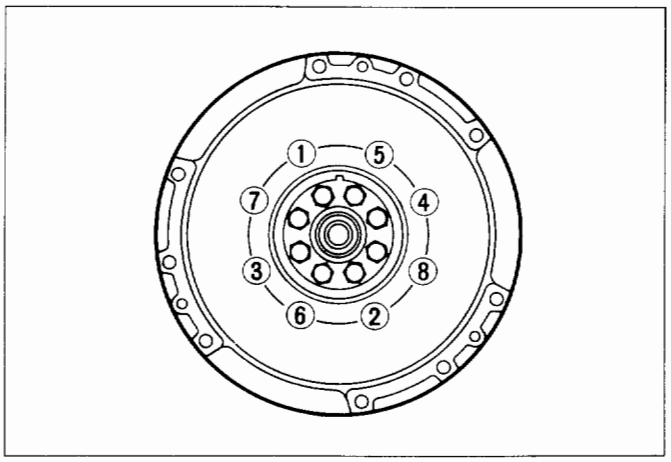

Fig. 6A-116

9. Piston and connecting rod assembly.

- Apply engine oil to the cylinder bores, the connecting rod bearings and the crankshaft pins.

  NOTE:
  Do not apply engine oil to the bearing back faces and the connecting rod bearing fitting surfaces.

- Check to see that the piston ring end gaps are correctly positioned (Fig. 6A-117).

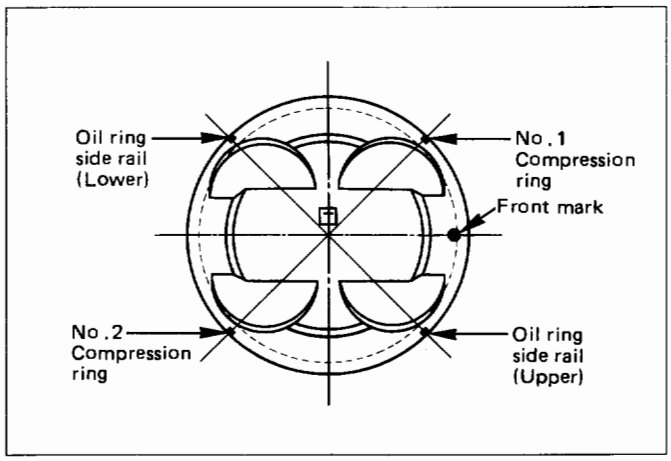

Fig. 6A-117

- Insert the piston/connecting rod assemblies into each cylinder with the piston ring compressor.
- The front marks must be facing the front of the engine (Fig. 6A-118).

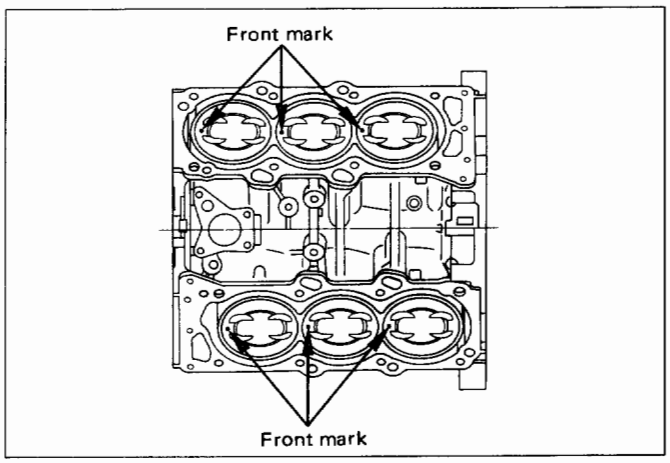

Fig. 6A-118

8. Oil gallery

- Tighten the bolts in 2 steps in the order shown (Fig. 6A-119).

	1st Step	2nd Step
N·m (lb·ft)	29 (22)	55° ~ 65°

7. Crankcase side bolts (Fig. 6A-119)

- Tighten crankcase bolts in sequence shown in the illustration.

Torque N·m (lb·ft)	39 (29)

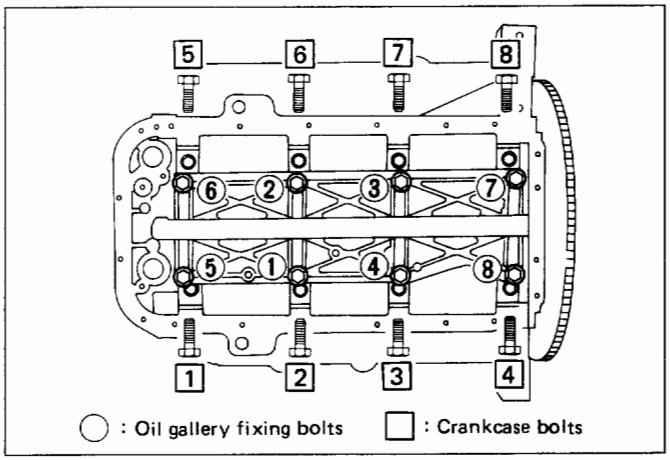

Fig. 6A-119

6. Oil pump assembly

- Refer to Section 6A1 "Oil pump installation".

5. Oil strainer and rubber ring

4. Oil pipe and rubber ring

3. Oil pan

1) Completely remove all residual sealant, lubricant and moisture from the sealing surfaces. The surfaces must be perfectly dry.
2) Apply a correct width bead of sealant (TB-1207C or its equivalent) to the contact surfaces of the oil pan. There must be no gaps in the bead (Fig. 6A-120).
3) The oil pan must be installed within 5 minutes after sealant application.
4) Tighten the bolts and nuts to the specified torque.

Torque N·m (lb·in)	10 (87)

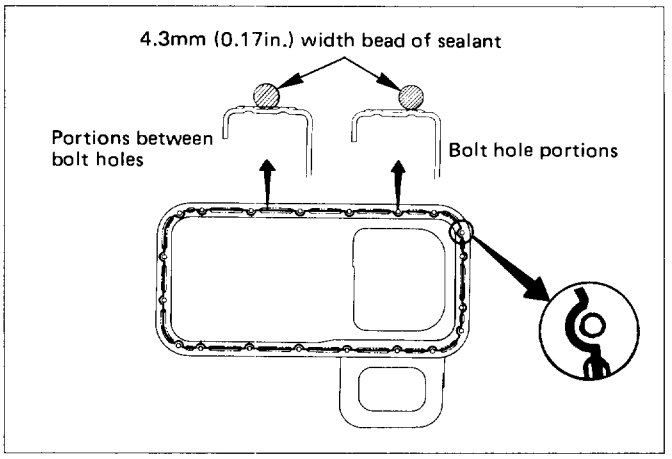

Fig. 6A-120

2. Cylinder head gasket

1. Cylinder head assembly

- Refer to Section 6A1 "Cylinder head installation".

MEMO

SECTION 6A1

3.2L V6 ENGINE

CONTENTS

General Description ..... 6A1— 2
Cylinder Block ..... 6A1— 3
Cylinder Head ..... 6A1— 3
Valve Train ..... 6A1— 3
Intake Manifold ..... 6A1— 3
Exhaust Manifold ..... 6A1— 3
Piston and Connecting Rod ..... 6A1— 3
Crankshaft and Bearing ..... 6A1— 3
Oil Pump ..... 6A1— 3
Engine Lubrication ..... 6A1— 3
On-Vehicle Service ..... 6A1— 4
Cylinder Head Cover LH (SOHC) ..... 6A1— 4
Cylinder Head Cover RH (SOHC) ..... 6A1— 5
Cylinder Head Cover (DOHC) ..... 6A1— 6
Common Chamber Duct (DOHC) ..... 6A1— 8
Common Chamber (SOHC) ..... 6A1—10
Common Chamber (DOHC) ..... 6A1—12
Intake Manifold (SOHC) ..... 6A1—14
Intake Manifold (DOHC) ..... 6A1—16
LH Exhaust Manifold ..... 6A1—18
RH Exhaust Manifold ..... 6A1—19
Timing Belt ..... 6A1—20
Crankshaft Pulley ..... 6A1—24
Camshaft/Rocker Arm (SOHC) ..... 6A1—25
Camshaft/Swing Arm/Hydraulic Lash Adjusters (DOHC) ..... 6A1—29
Timing Chain (DOHC) ..... 6A1—33
Valve stem Oil Controller and Valve Spring ..... 6A1—38
Cylinder Head (SOHC) ..... 6A1—42
Cylinder Head (DOHC) ..... 6A1—46
Oil Pan ..... 6A1—50
Oil Pump ..... 6A1—52
Oil Pump Oil seal ..... 6A1—53
Oil Filter ..... 6A1—54
Oil Cooler ..... 6A1—55
Piston, Piston Rings and Connecting Rod . 6A1—56
Crankshaft and Main Bearings ..... 6A1—57
Rear Oil Seal ..... 6A1—60
Engine Assembly ..... 6A1—61
Main Data and Specification ..... 6A1—63
General Specification ..... 6A1—63
Torque Specification ..... 6A1—64
Special Tools ..... 6A1—69

GENERAL DESCRIPTION

SOHC

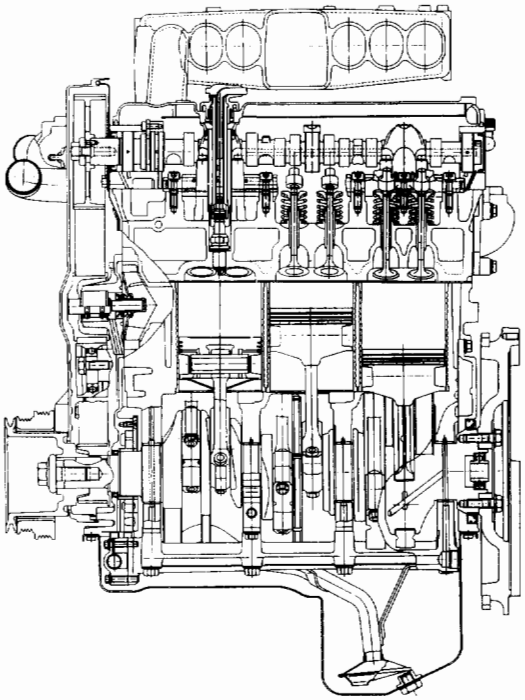

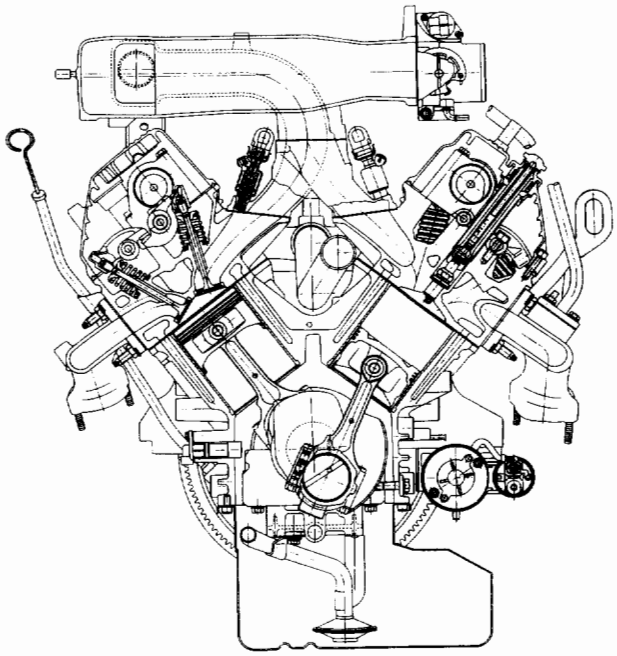

DOHC

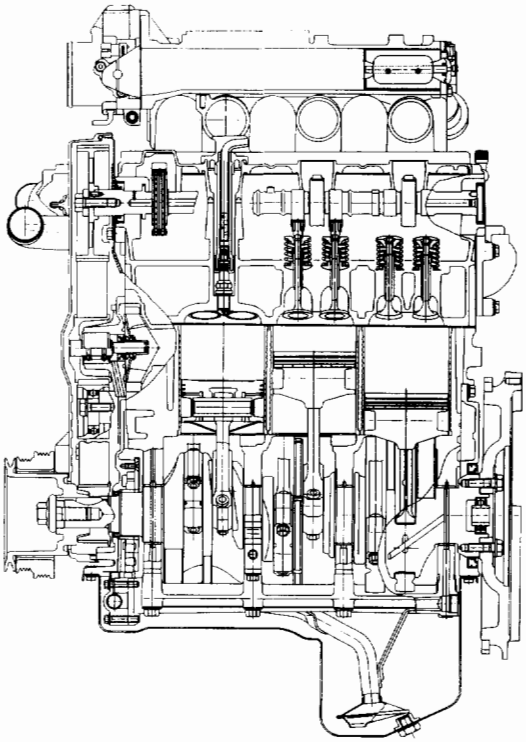

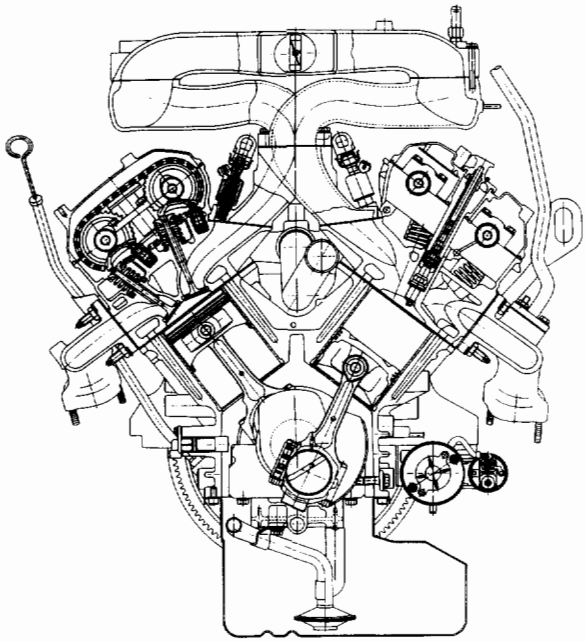

Fig. 6A1-1

CYLINDER BLOCK

The cylinder block is made of aluminum die-cast casting for 75° V-type six cylinders. It has a rear plate integrated structure and employs a deep skirt. The cylinder liner is cast and the liner inner diameter and crankshaft journal diameter are classified into grades. The crankshaft is supported by four bearings of which width is different between No.2, No.3 and No.1, No.4; the width of No.3 bearing on the body side is different in order to support the thrust bearing. The bearing cap is made of nodular cast iron and each bearing cap uses four bolts and two side bolts.

CYLINDER HEAD

The cylinder head, made of aluminum alloy casting employs a pent-roof type combustion chamber with a spark plug in the center.
The intake and exhaust valves are placed in V-type design. The ports are cross-flow type.

VALVE TRAIN

SOHC: The camshafts on both banks are driven by a timing belt to operate the valves via rocker arm. No further valve clearance adjustment is required, due to the Hydraulic lash adjuster attached to the rocker arm.

DOHC: Intake camshaft on the both sides of banks are driven through a timing belt, while exhaust camshaft are driven by the both sides of intake camshaft through chains.
The driven camshafts open and close valves through swing arms.
Valve clearance is automatically adjusted by means of HLA built in the cylinder head.

INTAKE MANIFOLD

SOHC: The intake manifold system is composed of the aluminum cast common chamber and intake manifold attached with six fuel injectors.

DOHC: The intake manifold system is composed of the aluminum cast common chamber duct having the induction control valve, common chamber and intake manifold attached with six fuel injectors.

EXHAUST MANIFOLD

The exhaust manifold is made of nodular cast iron.

PISTONS AND CONNECTING RODS

Aluminum pistons are used after selecting the grade that meets the cylinder bore diameter. Each piston has two compression rings and one oil ring. The piston pin made of chromium steel is offset 1mm toward the thrust side, and the thrust pressure of piston to the cylinder wall varies gradually as the piston travels. The connecting rods are made of forged steel. The connecting rod bearings are graded for correct size selection.

CRANKSHAFT AND BEARINGS

The crankshaft is made of Ductile cast-iron.Pins and journals are graded for correct size selection for their bearing.

OIL PUMP

The trochoid-type oil pump is driven by crankshaft. Operation and service procedures are described in this section.

ENGINE LUBRICATION

The oil discharged by a trochoid-type oil pump driven by the crankshaft is fed through full-flow oil filter and engine coolant cooled oil cooler up to the oil gallery provided under the crankshaft bearing cap. The oil is then led to the crankshaft journals and cylinder head. The crank pins are lubricated with oil from crankshaft journals through oil holes. Also, an oil jet is fed to each cylinder from crankshaft journals on the connecting rod for piston cleaning. The oil pan flange is sealed with liquid packing only; do not deform or damage the flange surface during removal or installation.

ON-VEHICLE SERVICE

CYLINDER HEAD COVER LH (SOHC)

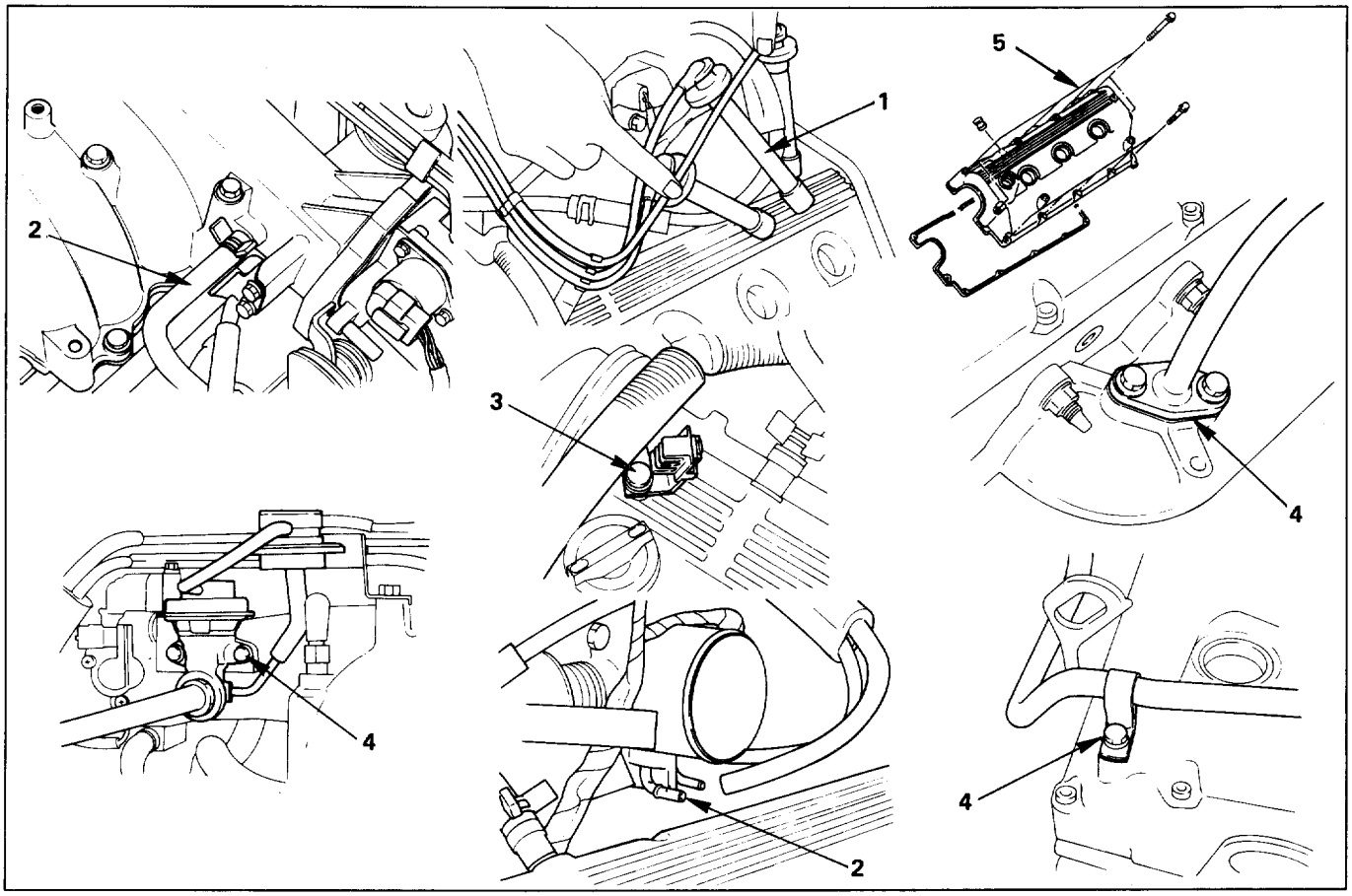

Fig. 6A1-2

REMOVAL

Preparation: • Battery ground cable

1. **Ignition wire**
   - Disconnect from spark plug side.
2. **Positive Crankcase Ventilation hose and Vacuum hose**
   - Disconnect from common chamber.
   - Disconnect vacuum hose from throttle body.
3. **Engine harness bracket**
   - Remove fixing bolts on cylinder head cover.
4. **Exhaust Gas Recirculation pipe and valve**
   - Remove fixing bolts on cylinder head cover.
   - Remove two fixing bolts on exhaust manifold.
   - Remove two valve fixing bolts on common chamber.
5. **Cylinder head cover**
   - Remove 11 fixing bolts, then the cylinder head cover.

INSTALLATION

5. **Cylinder head cover**
   - Clean the sealing surface of cylinder head and cylinder head cover to remove oil and sealing materials completely. Apply sealant (TB-1207B or equivalent) of bead diameter 2-3 mm at four places of arched area of camshaft brackets on front and rear sides. (Fig. 6A1-3)

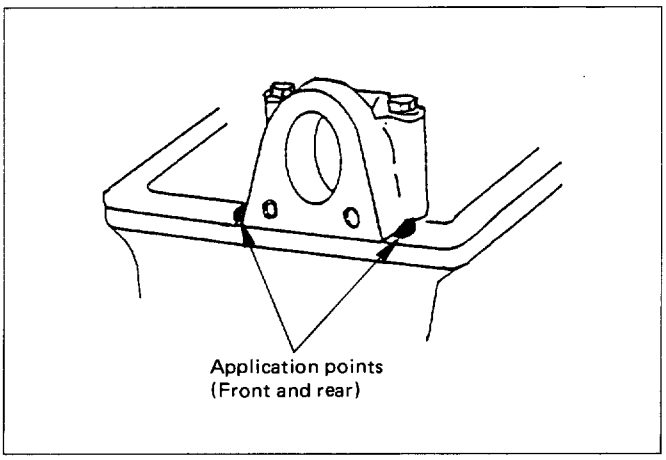

Fig. 6A1-3

   - Tighten bolts to the specified torque.

Torque	N·m (lb·in)	8 (69)

4. **Exhaust Gas Recirculation pipe and valve**
   - Tighten each fixing bolt to the specified torque.

Valve fixing bolt

Torque	N·m (lb·in)	8 (69)

Exhaust manifold fixing bolt

Torque	N·m (lb·ft)	28 (21)

3. **Engine harness bracket**
2. **Positive Crankcase Ventilation hose and Vacuum hose**
1. **Ignition wire**

CYLINDER HEAD COVER RH (SOHC)

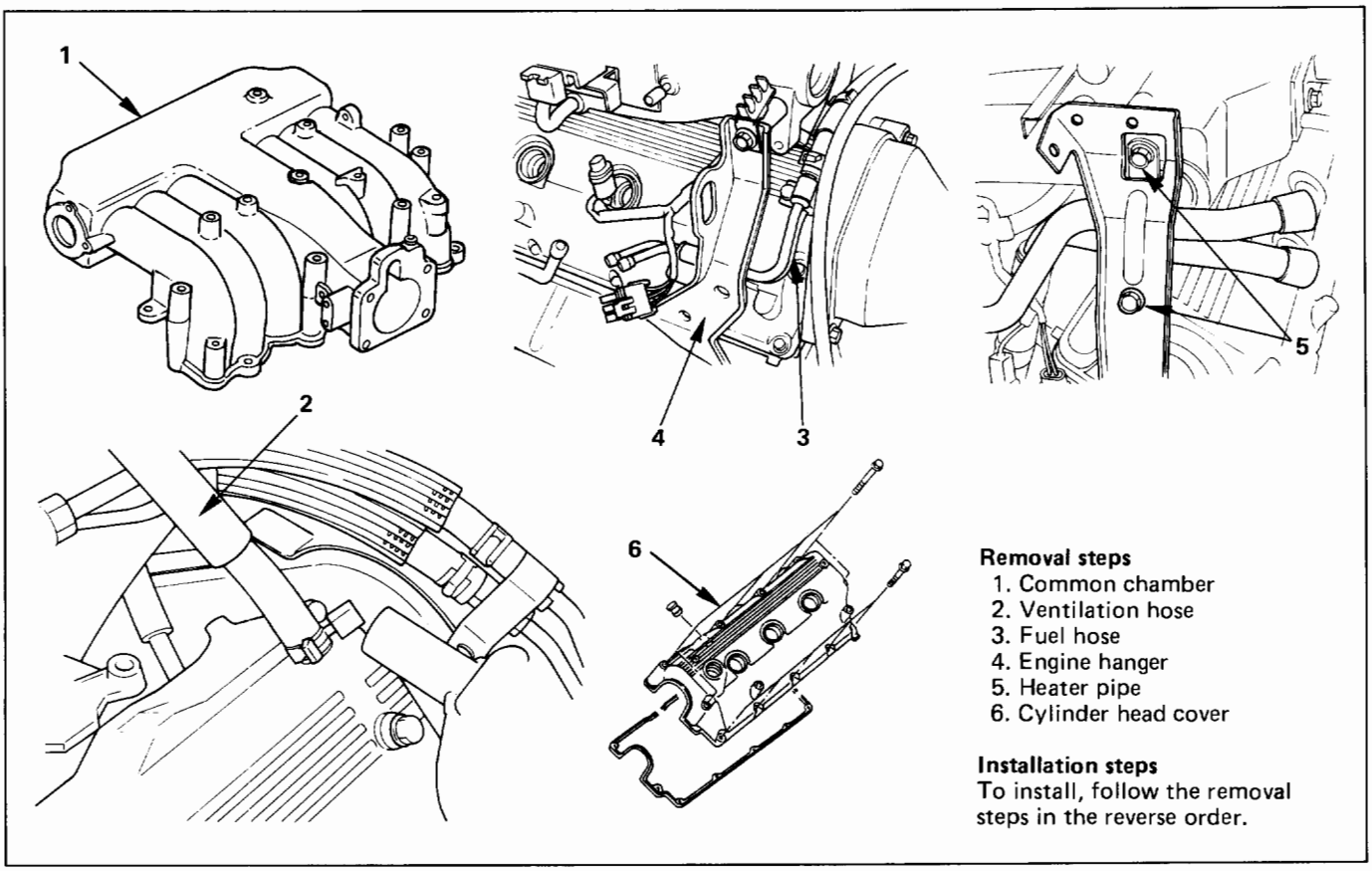

Fig. 6A1-4

REMOVAL

Preparation: • Battery ground cable

1. **Common chamber**
   - See "Removal and installation of common chamber".
2. **Ventilation hose**
   - Disconnect from cylinder head cover.
3. **Fuel hose**
   - Disconnect feed and return hoses from fuel pipes.
   - Remove two fuel hose fixing bolts on the cylinder head cover.
4. **Engine hanger**
   - Remove heat protector on exhaust manifold.
   - Remove bolts and nuts that secure the hanger to the exhaust manifold and cylinder head.
5. **Heater pipe**
   - Remove heater pipe fixing bolts from the bracket.
6. **Cylinder head cover**
   - Remove 11 fixing bolts, then the cylinder head cover.

INSTALLATION

6. **Cylinder head cover**
   - Clean the sealing surface of cylinder head and cylinder head cover to remove oil and sealing materials completely. Apply sealant (TB-1207B or equivalent) of bead diameter 2-3 mm to four places of arched area of camshaft brackets on front and rear sides. (Fig.6A1-5)
   - Tighten bolts to the specified torque.

Torque	N·m (lb·in)	8 (69)

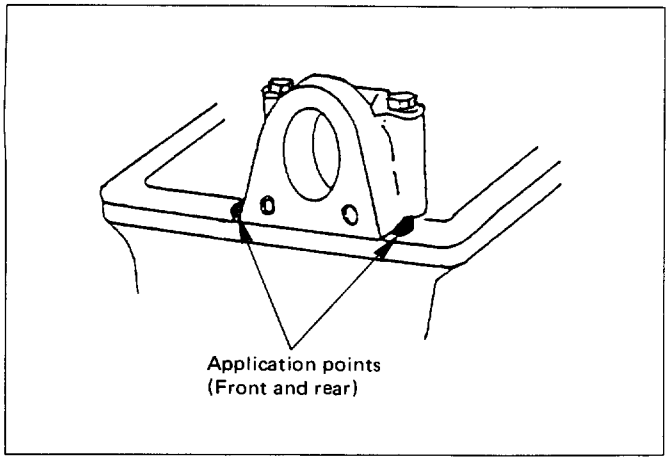

Fig. 6A1-5

5. **Heater pipe**
   - Tighten bolts to the specified torque.

Torque	N·m (lb·ft)	21 (15)

4. **Engine hanger**
   - Tighten bolts and nuts to the specified torque.

Bolt

Torque	N·m (lb·ft)	21 (15)

Nut

Torque	N·m (lb·ft)	57 (42)

3. **Fuel hose**
2. **Ventilation hose**
1. **Common chamber**
   - See "Removal and installation of common chamber".

CYLINDER HEAD COVER (DOHC)

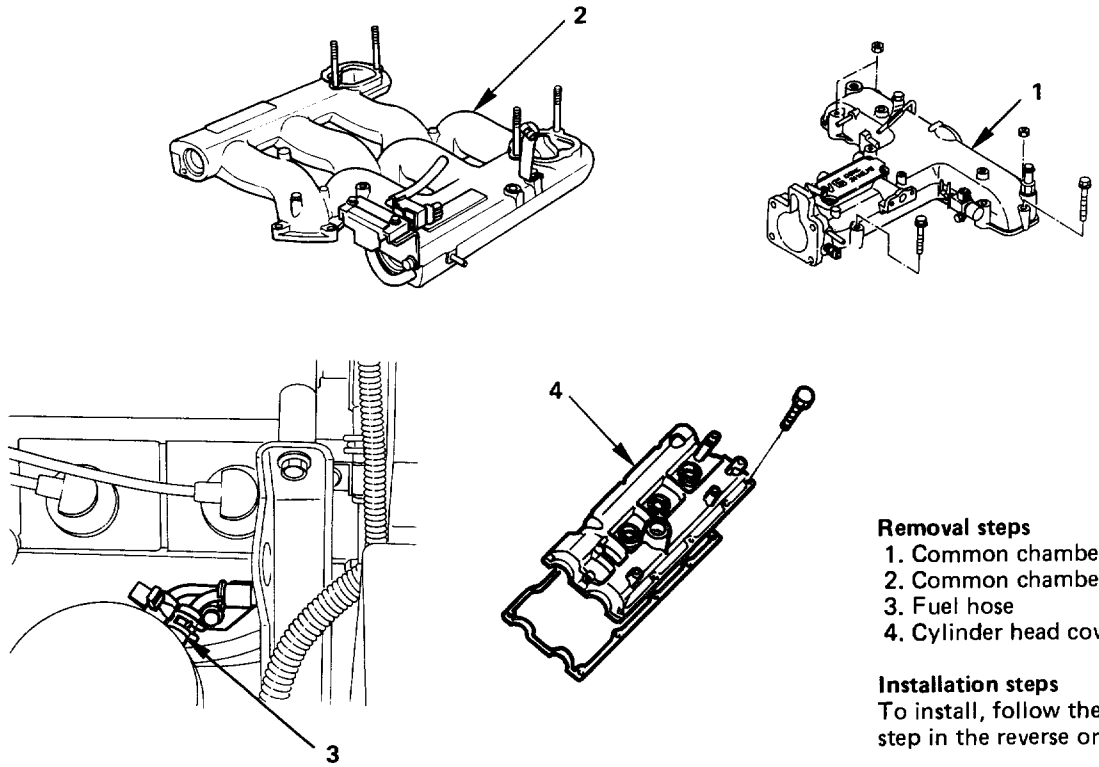

Removal steps
1. Common chamber duct
2. Common chamber
3. Fuel hose
4. Cylinder head cover

Installation steps
To install, follow the removal step in the reverse order.

Fig. 6A1-6

REMOVAL

Preparation: Battery ground

1. **Common chamber duct**
   - Refer to "Common chamber removal and installation" in this section.
2. **Common chamber**
   - Refer to "Common chamber removal and installation" in this section.
3. **Fuel hose**
   - Disconnect feed and return hose from fuel pipe.
4. **Cylinder head cover**

INSTALLATION

4. **Cylinder head cover**
   - Clean the sealing surface of cylinder head and cylinder head cover to remove oil and sealing materials completely. Apply sealant (TB-1207B or equivalent) of bead diameter 2—3 mm to four places of arched area of camshaft brackets on front and rear sides. (Fig. 6A1-7)
   - Tighten bolts to the specified torque.

Torque	N·m (lb·in)	8 (69)

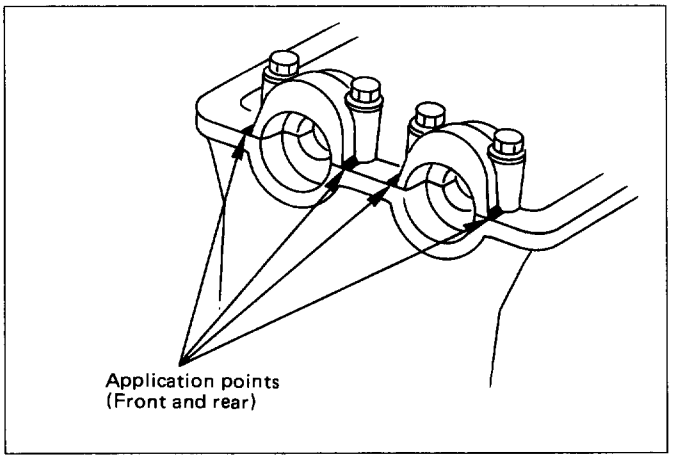

Fig. 6A1-7

3. **Fuel hose**
   - Connect the fuel hose as shown in the Fig. 6A1-8.

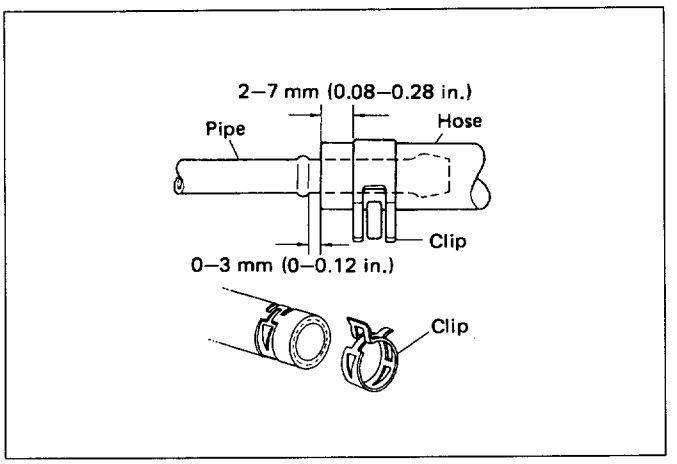

Fig. 6A1-8

2. **Common chamber**
   - Refer to "Common chamber removal and installation" in this section.
1. **Common chamber duct**
   - Refer to "Common chamber removal and installation" in this section.

COMMON CHAMBER DUCT (DOHC)

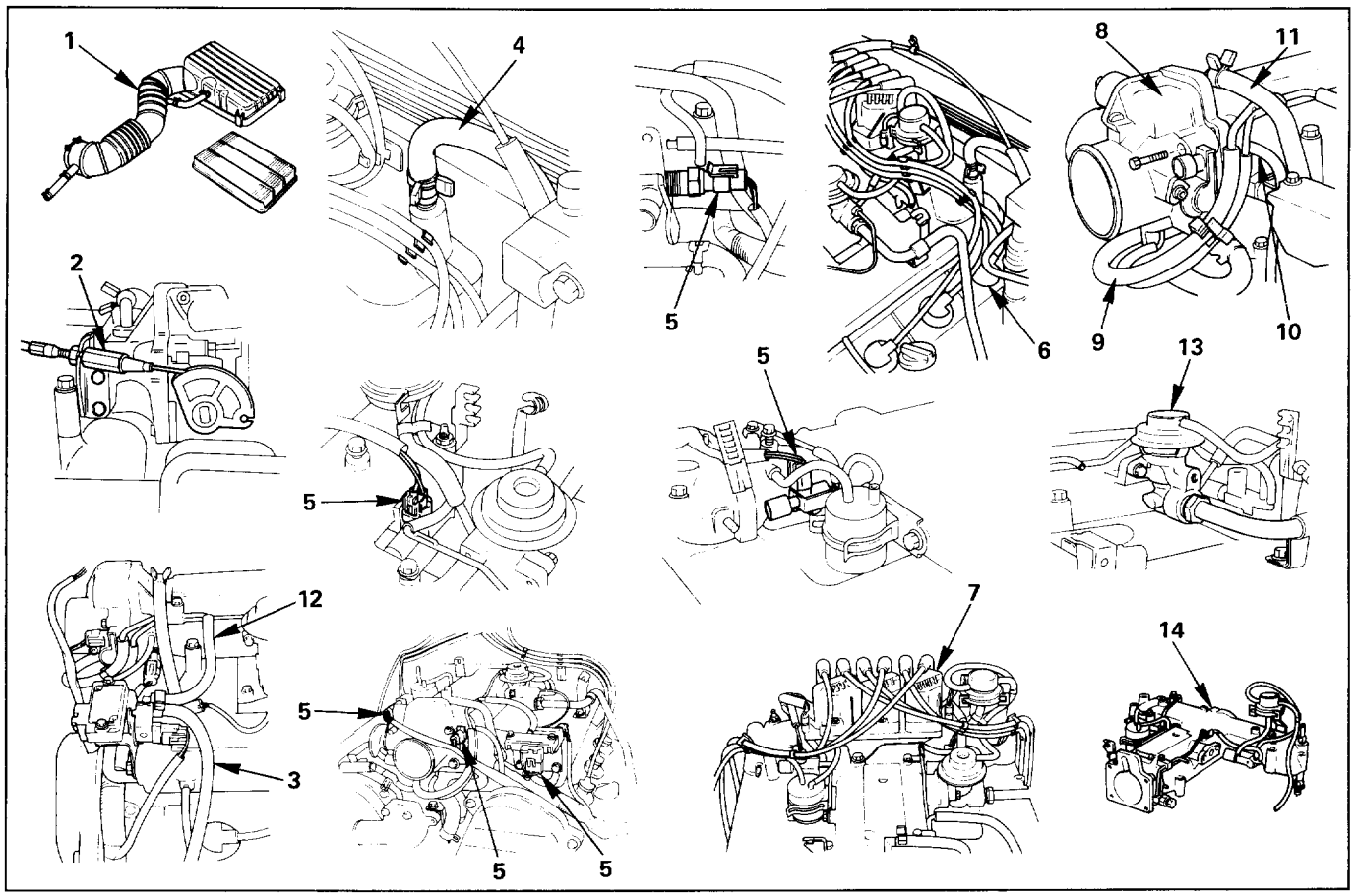

Fig. 6A1-9

REMOVAL

Preparation: Battery ground cable

1. **Air cleaner assembly**
2. **Accelerator pedal cable**
   - Disconnect from throttle body and cable bracket.
3. **Canister vacuum hose**
   - Disconnect from Vacuum Switch Valve (VSV).
4. **Vacuum booster hose**
   - Disconnect from common chamber.
5. **Connectors**
   - Disconnect from Idler Air Control Valve, Throttle Position Sensor, Manifold Absolute Pressure, canister VSV, Exhaust Gas Recirculation (EGR) VSV, Intake Air Temperature and vacuum tank VSV.
6. **High tension cables**
   - Disconnect from cylinder head cover.
7. **Ignition Control Module assembly**
   - Disconnect three Electronic Ignition connectors.
   - Remove three Electronic Ignition bracket fixing bolts, and remove Electronic Ignition assembly with plug wires.
8. **Throttle Body**
   - Remove four fixing bolts.
9. **Vacuum hoses**
   - Disconnect vacuum hoses on canister VSV and EGR VSV from the throttle body.
10. **Fuel Pressure Control Vavle vacuum hose**
    - Disconnect from common chamber duct.
11. **Positive Crankcase Ventilation hose**
    - Disconnect from common chamber duct.
12. **Evaporative Emission Canister Purge hose**
    - Disconnect from common chamber duct.
13. **EGR Valve assembly**
    - Remove EGR Valve assembly and four pipe fixing bolts from common chamber duct and exhaust manifold.
14. **Common chamber duct**
    - Remove four bolts and nuts and three bracket fixing bolts.
    - Remove the common chamber duct.

INSTALLATION

14. **Common chamber duct**
    - Tighten bolts and nuts to the specified torque.

Bolts

Torque	N·m (lb·ft)	24 (17)

Nuts

Torque	N·m (lb·ft)	24 (17)

13. **Exhaust Gas Recirculation Valve assembly**
    - Tighten bolts to the specified torque.

Exhaust Gas Recirculation Valve Side

Torque	N·m (lb·in)	8 (69)

Exhaust Manifold Side

Torque	N·m (lb·ft)	28 (21)

12. **Evaporative Emission Canister Purge hose**
11. **Positive Crankcase Vantilation hose**
10. **Fuel Pressure Control Valve vacuum hose**
8. **Throttle body**
    - Tighten bolts to the specified torque.

Torque	N·m (lb·ft)	19 (14)

9. **Vacuum hose**
    - Connect vacuum hoses on canister Vacuum Switching Valve and Exhaust Gas Recirculation Vacuum Switching Valve to the throttle body.
7. **Ignition Control Module assembly**
    - Tighten bolts to the specified torque and connect connector.

Torque	N·m (lb·ft)	19 (14)

6. **High tension cables**
5. **Connectors**
    - Connect each connector.
4. **Vacuum booster hose**
3. **Canister vacuum hose**
2. **Accelerator Pedal cable**
    - Accelerator pedal cable adjustment (Fig. 6A1-10)
    1) Loosen the adjusting nut and screw cap.
    2) Pull outer cable while fully closing the throttle valve.
    3) Tighten adjusting nut and screw cap temporarily.
    4) Loosen adjusting nut by three turns and tighten screw cap.
    Then, manually operating the throttle valve, make sure that the valve lever returns up to the stopper screw.
    If it does not reach the stopper screw, repeat from step 1).
1. **Air cleaner assembly**

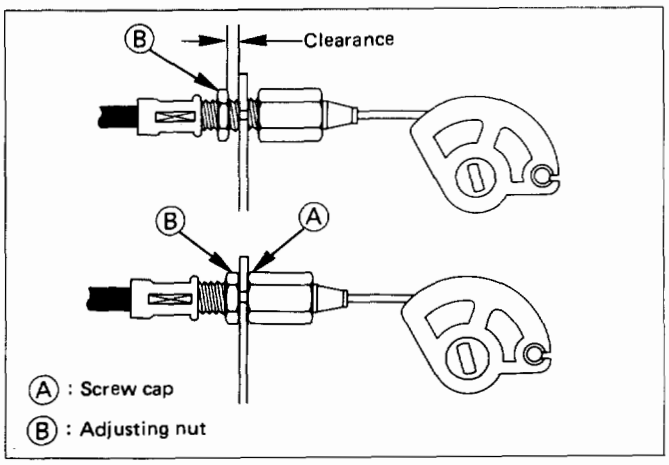

Fig. 6A1-10

COMMON CHAMBER (SOHC)

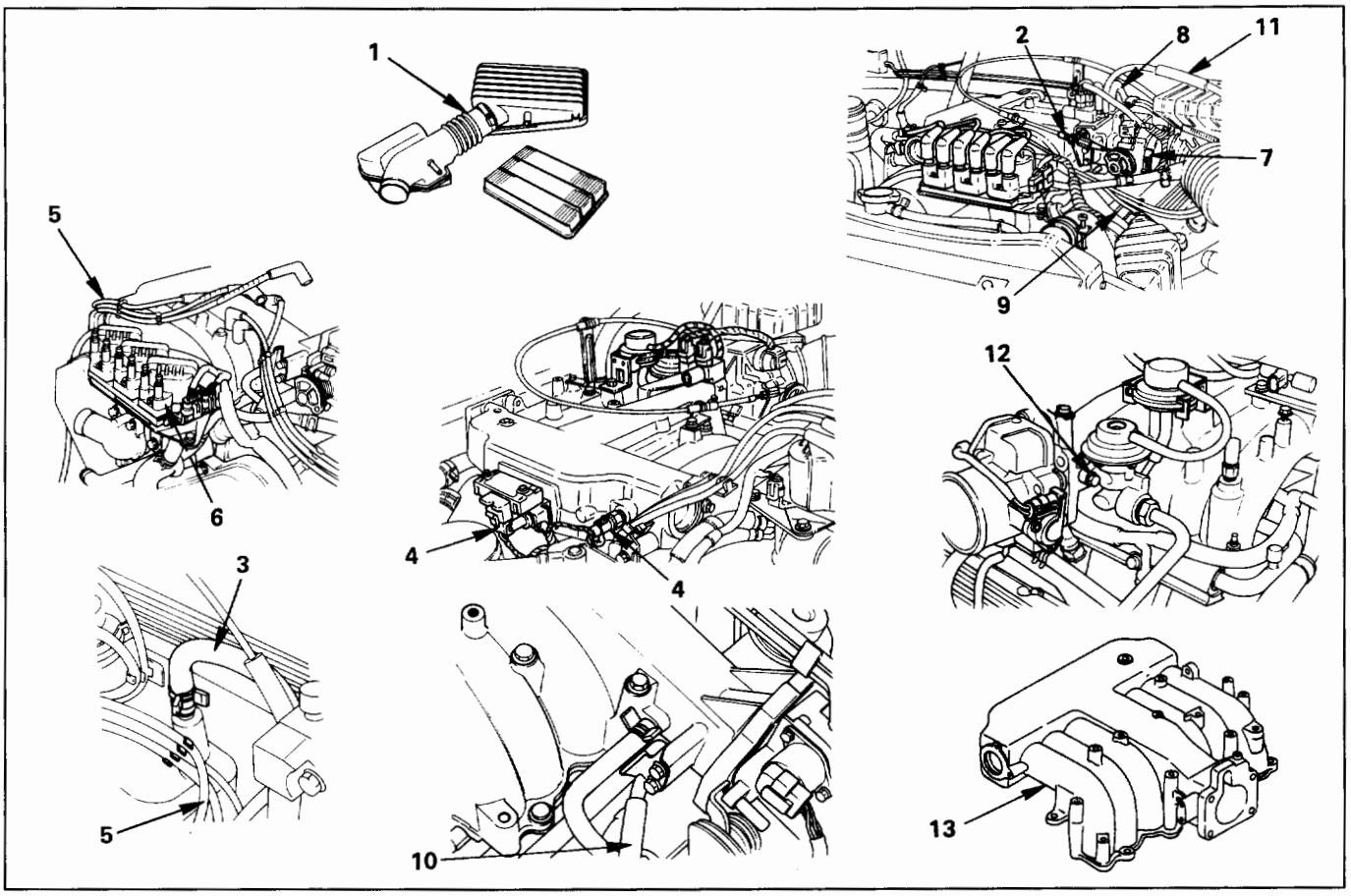

Fig. 6A1-11

REMOVAL

Preparation: Battery ground cable

1. **Air cleaner assembly**
2. **Accelerator Pedal cable**
   - Disconnect from throttle body and cable bracket.
3. **Vacuum booster hose**
   - Disconnect from common chamber.
4. **Connectors**
   - Disconnect from Manifold Absolute Pressure, canister Vacuum Switching Valve (VSV), Exhaust Gas Recirculation VSV, Intake Air Temperature and ground cable.
5. **High tension cables**
   - Disconnect from cylinder head cover.
6. **Ignition Control Module assembly**
   - Disconnect three Electronic Ignition connectors.
   - Remove three Electronic Ignition bracket fixing bolts, and remove Electronic Ignition assembly with plug wires.
7. **Throttle body**
   - Remove four fixing bolts.
8. **Vacuum hoses**
   - Disconnect vacuum hoses on canister VSV and Exhaust Gas Recirculation VSV from the Throttle Body.
9. **Positive crankcase ventilation hose**
   - Disconnect from common chamber.
10. **Fuel Pressure Control Valve vacuum hose**
    - Disconnect from common chamber.
11. **Evaporative Emission Canister Purge hose**
    - Disconnect from common chamber.
12. **Exhaust Gas Recirculation Valve assembly**
    - Remove two bolts on common chamber to disconnect Backpressure Transducer vacuum hose.
13. **Common chamber**
    - Remove six bolts and two nuts and three bracket fixing bolts.
    - Remove the common chamber.

INSTALLATION

13. Common chamber
- Tighten bolts and nuts to the specified torque.

Bolts

Torque	N·m (lb·ft)	24 (17)

Nut

Torque	N·m (lb·ft)	24 (17)

12. Exhaust Gas Recirculation Valve assembly
- Tighten bolts to the specified torque.

Torque	N·m (lb·in)	9 (78)

11. Evaporative Emission Canister Purge hose
9. Positive Crankcase Ventilation hose
10. Fuel Pressure Control Valve vacuum hose
7. Throttle body
- Tighten bolts to the specified torque.

Torque	N·m (lb·ft)	22 (16)

8. Vacuum hose
- Connect vacuum hoses on canister Vacuum Switching Valve and Exhaust Gas Recirculation Vacuum Switching Valve to the Throttle Body.

6. Ignition Control Module assembly
- Tighten bolts to the specified torque and connect connector.

Torque	N·m (lb·ft)	22 (16)

5. High tension cables
4. Connectors
- Connect each connector without fail.

3. Vacuum booster hose
2. Accelerator Pedal cable
- Accelerator pedal cable adjustment (Fig. 6A1-12)
  1) Loosen the adjusting nut and screw cap.
  2) Pull outer cable while fully closing the throttle valve.
  3) Tighten adjusting nut and screw cap temporarily.
  4) Loosen adjusting nut by three turns and tighten screw cap.
     Then, manually operating the throttle valve, make sure that the valve lever returns up to the stopper screw.
     If it does not reach the stopper screw, repeat from step 1).

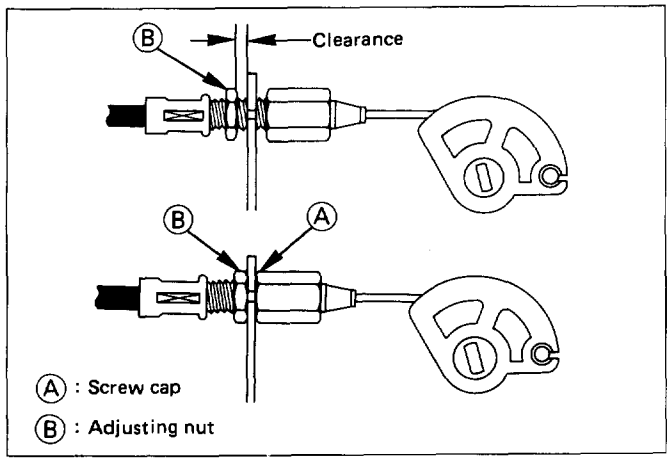

Fig. 6A1-12

1. Air cleaner assembly

COMMON CHAMBER (DOHC)

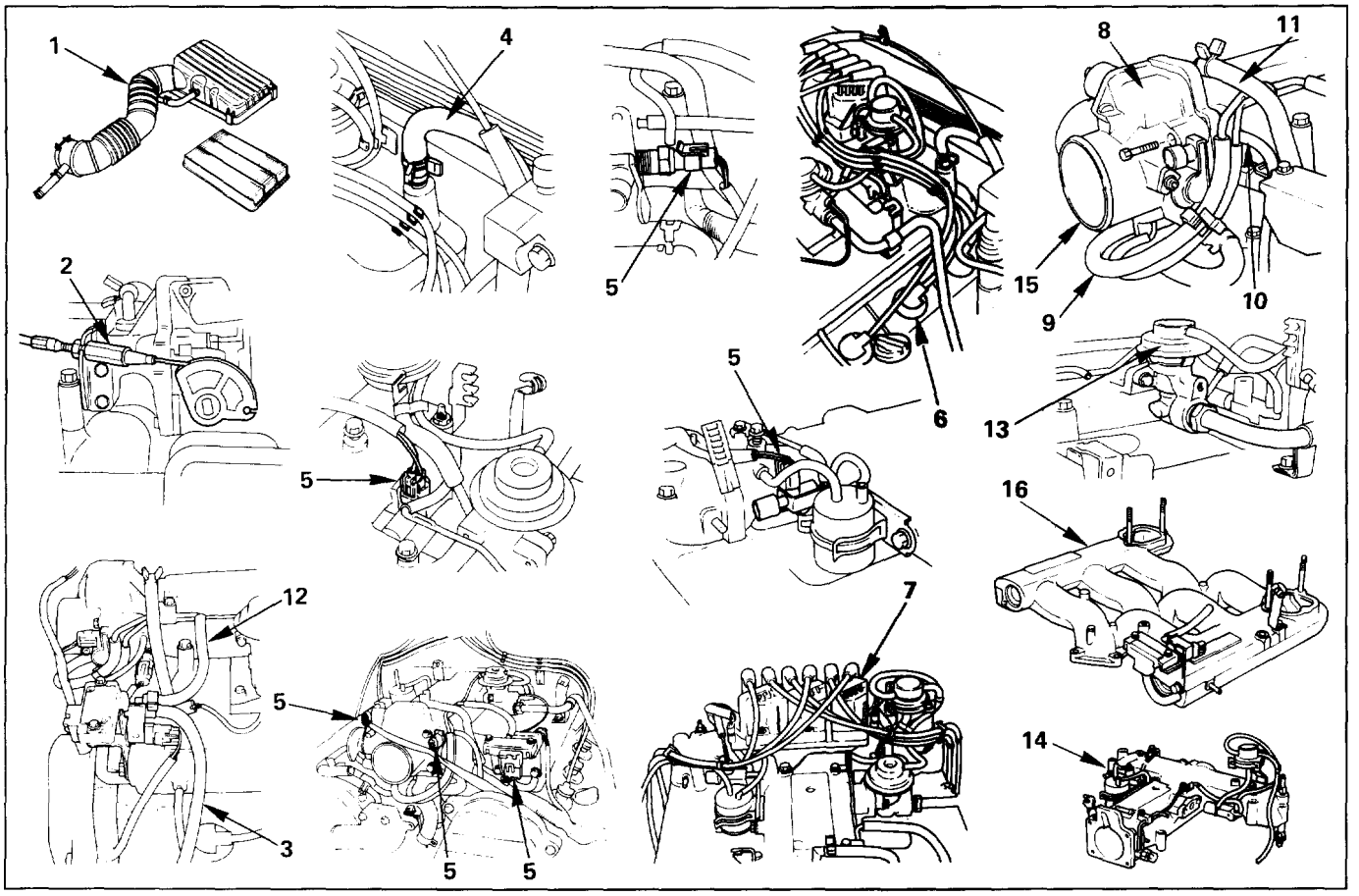

Fig. 6A1-13

REMOVAL

Preparation: Battery ground cable

1. **Air cleaner assembly**
2. **Accelerator Pedal cable**
   - Disconnect from throttle body and cable bracket.
3. **Canister vacuum hose**
   - Disconnect from Vacuum Switching Valve (VSV).
4. **Vacuum booster hose**
   - Disconnect from common chamber.
5. **Connectors**
   - Disconnect from Idle Air Control Valve, Throttle Position Sensor, Manifold Absolute Pressure, canister VSV, Exhaust Gas Recirculation (EGR) VSV, Intake Air Temperature and vacuum tank VSV.
6. **High tension cables**
   - Disconnect from cylinder head cover.
7. **Ignition Control Module assembly**
   - Disconnect three Electronic Ignition connectors.
   - Remove three Electronic Ignition bracket fixing bolts, and remove Electronic Ignition assembly with plug wires.
8. **Throttle body**
   - Remove four fixing bolts.
9. **Vacuum hoses**
   - Disconnect vacuum hoses on canister VSV and EGR VSV from the throttle body.
10. **Fuel Pressure Control Valve vacuum hose**
    - Disconnect from common chamber duct.
11. **Positive Crankcase Ventilation hose**
    - Disconnect from common chamber duct.
12. **Evaporative Emission Canister Purge hose**
    - Disconnect from common chamber duct.
13. **EGR Valve assembly**
    - Remove EGR Valve assembly and four pipe fixing bolts from common chamber duct and exhaust manifold.
14. **Common chamber duct**
    - Remove four bolts and nuts and three bracket fixing bolts.
    - Remove the common chamber duct.
15. **Throttle body**
    - Disconnect water hose from Throttle Body. At this time, pinch the hose with pinch-off pliers to prevent water leakage.
16. **Common chamber**
    - Remove six bolts and two nuts.
    - Remove common chamber fixing bolts on the rear side of common chamber, then remove common chamber.

INSTALLATION

16. Common chamber
- Tighten bolts and nuts to the specified torque.

Bolts

Torque	N·m (lb·ft)	24 (17)

Nuts

Torque	N·m (lb·ft)	24 (17)

15. Throttle body
- Connect the water hose securely.

14. Common chamber duct
- Tighten bolts and nuts to the specified torque.

Bolts

Torque	N·m (lb·ft)	24 (17)

Nuts

Torque	N·m (lb·ft)	24 (17)

13. Exhaust Gas Recirculation Valve assembly
- Tighten bolts to the specified torque.

Exhaust Gas Recirculation Valve Side

Torque	N·m (lb·in)	8 (69)

Exhaust Manifold Side

Torque	N·m (lb·ft)	28 (21)

12. Evaporative Emission Canister Purge hose
11. Positive Crankcase Ventilation hose
10. Fuel Pressure Control Valve vacuum hose
8. Throttle body
- Tighten bolts to the specified torque.

Torque	N·m (lb·ft)	19 (14)

9. Vacuum hose
- Connect vacuum hoses on canister Vacuum Switching Valve and Exhaust Gas Recirculation Vacuum Switching Valve to the throttle body.

7. Ignition Control Module assembly
- Tighten bolts to the specified torque and connect connector.

Torque	N·m (lb·ft)	19 (14)

6. High tension cables
5. Connectors
- Connect each connector.

4. Vacuum booster hose
3. Canister vacuum hose

2. Accelerator Pedal cable
- Accelerator pedal cable adjustment (Fig. 6A1-14)
  1) Loosen the adjusting nut and screw cap.
  2) Pull outer cable while fully closing the throttle valve.
  3) Tighten adjusting nut and screw cap temporarily.
  4) Loosen adjusting nut by three turns and tighten screw cap.
     Then, manually operating the throttle valve, make sure that the valve lever returns up to the stopper screw.
     If it does not reach the stopper screw, repeat from step 1).

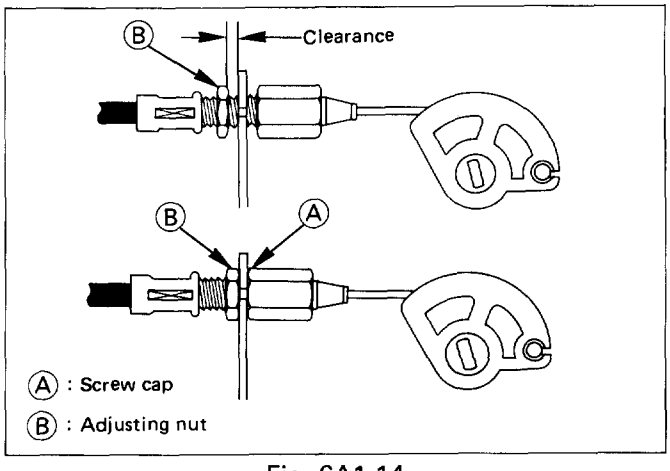

Fig. 6A1-14

1. Air cleaner assembly

INTAKE MANIFOLD (SOHC)

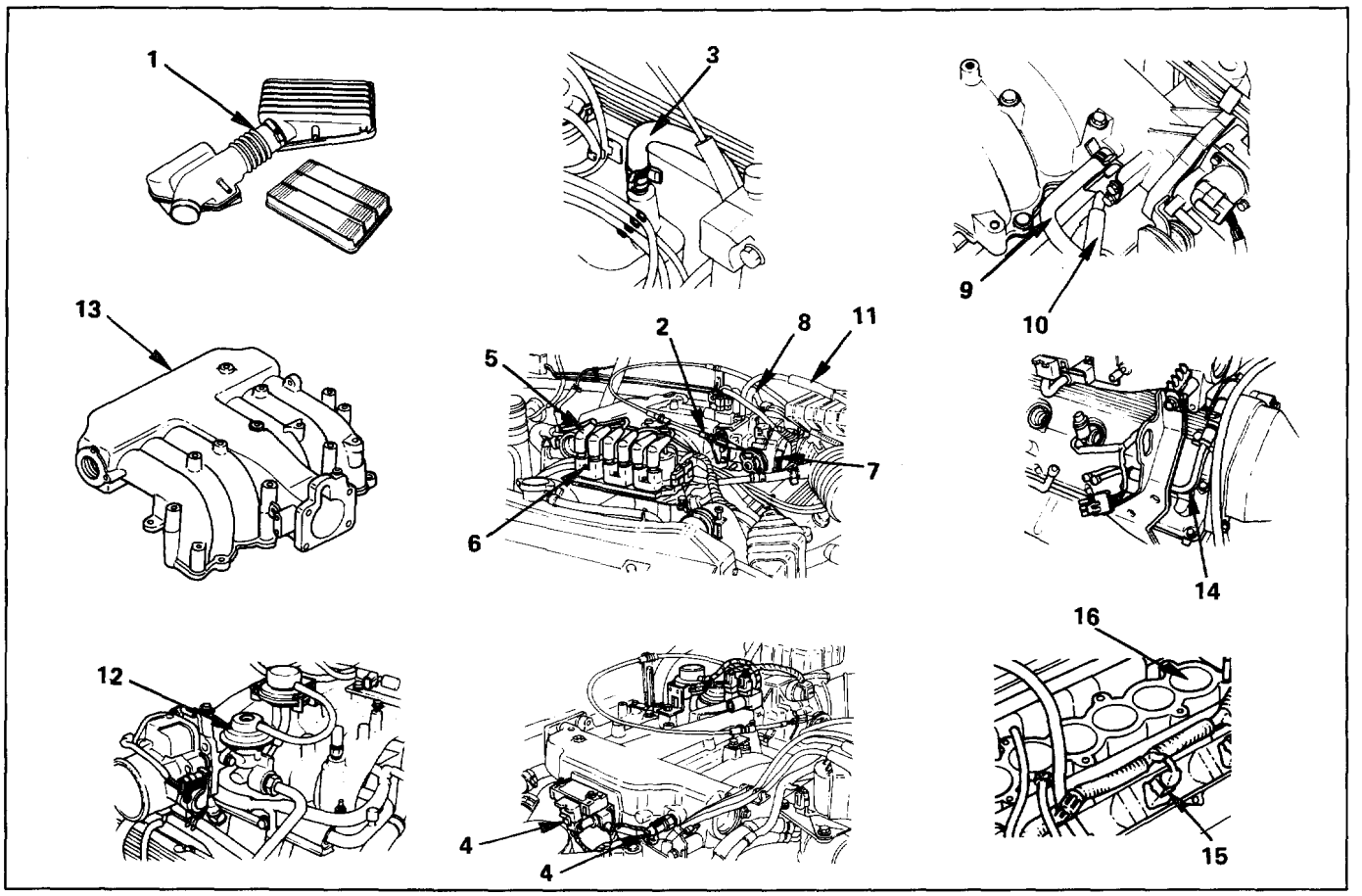

Fig. 6A1-15

REMOVAL

Preparation: Battery ground cable

1. **Air cleaner assembly**
2. **Accelerator Pedal cable**
   - Disconnect from throttle body and cable bracket.
3. **Vacuum booster hose**
   - Disconnect from common chamber.
4. **Connectors**
   - Disconnect from Manifold Aboslute Pressure, canister Vacuum Switching Valve (VSV), Exhaust Gas Recirculation VSV, Intake Air Temperature and ground cable.
5. **High tension cables**
   - Disconnect from cylinder head cover.
6. **Ignition Control Module assembly**
   - Disconnect three Electronic Ignition connectors.
   - Remove three Electronic Ignition bracket fixing bolts, and remove Electronic Ignition assembly with plug wires.
7. **Throttle body**
   - Remove four fixing bolts.
8. **Vacuum hoses**
   - Disconnect vacuum hoses on canister VSV and Exhaust Gas Recirculation VSV from the throttle body.
9. **Positive Crankcase Ventilation hose**
   - Disconnect from common chamber.
10. **Fuel Pressure Control Valve vacuum hose**
    - Disconnect from common chamber.
11. **Evaporative Emission Canister Purge hose**
    - Disconnect from common chamber.
12. **Exhaust Gas Recirculation Valve assembly**
    - Remove two bolts from common chamber and disconnect Backpressure Transducer vacuum hose.
13. **Common chamber**
    - Remove six bolts and two nuts and three bracket fixing bolts.
    - Remove the common chamber.
14. **Fuel hoses**
    - Disconnect feed and return fuel hoses from fuel pipes, and remove two bracket fixing bolts on the cylinder head cover.
15. **Connectors**
    - Disconnect connectors for each fuel injector.
    - Disconnect thermo sensor connector.

16. Intake manifold
- Remove two fixing bolts and four nuts, then remove the intake manifold.

INSTALLATION

16. Intake manifold
- Tighten bolts and nuts to the specified torque.

Bolts

Torque	N·m (lb·ft)	24 (17)

Nuts

Torque	N·m (lb·ft)	24 (17)

15. Connectors
- Connect each connector.

14. Fuel hoses
- Connect the hoses securely and install bolts on the head cover.

13. Common chamber
- Tighten bolts and nuts to the specified torque.

Bolts

Torque	N·m (lb·ft)	24 (17)

Nuts

Torque	N·m (lb·ft)	24 (17)

12. Exhaust Gas Recirculation Valve assembly
- Tighten bolts to the specified torque.

Torque	N·m (lb·in)	9 (78)

11. Evaporative Emission Canister Purge hose
10. Fuel Pressure Control Valve vacuum hose
9. Positive Crankcase Ventilation hose
7. Throttle body
- Tighten bolts to the specified torque.

Torque	N·m (lb·ft)	22 (16)

8. Vacuum hose
- Connect vacuum hoses on canister Vacuum Switching Valve and Exhaust Gas Recirculation Vacuum Switching Valve to the throttle body.

6. Ignition Control Module assembly
- Tighten bolts to the specified torque and connect connector.

Torque	N·m (lb·ft)	22 (16)

5. High tension cables
4. Connectors
- Connect each connector without fail.

3. Vacuum booster hose

2. Accelerator Pedal cable
- Accelerator pedal cable adjustment (Fig. 6A1-16)
  1) Loosen the adjusting nut and screw cap.
  2) Pull outer cable while fully closing the throttle valve.
  3) Tighten adjusting nut and screw cap temporarily.
  4) Loosen adjusting nut by three turns and tighten screw cap.
     Then, manually operating the throttle valve, make sure that the valve lever returns up to the stopper screw.
     If it does not reach the stopper screw, repeat from step 1).

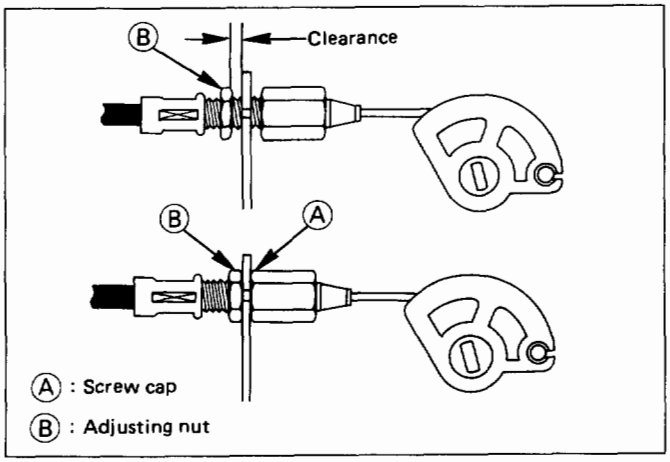

Fig. 6A1-16

1. Air cleaner assembly

INTAKE MANIFOLD (DOHC)

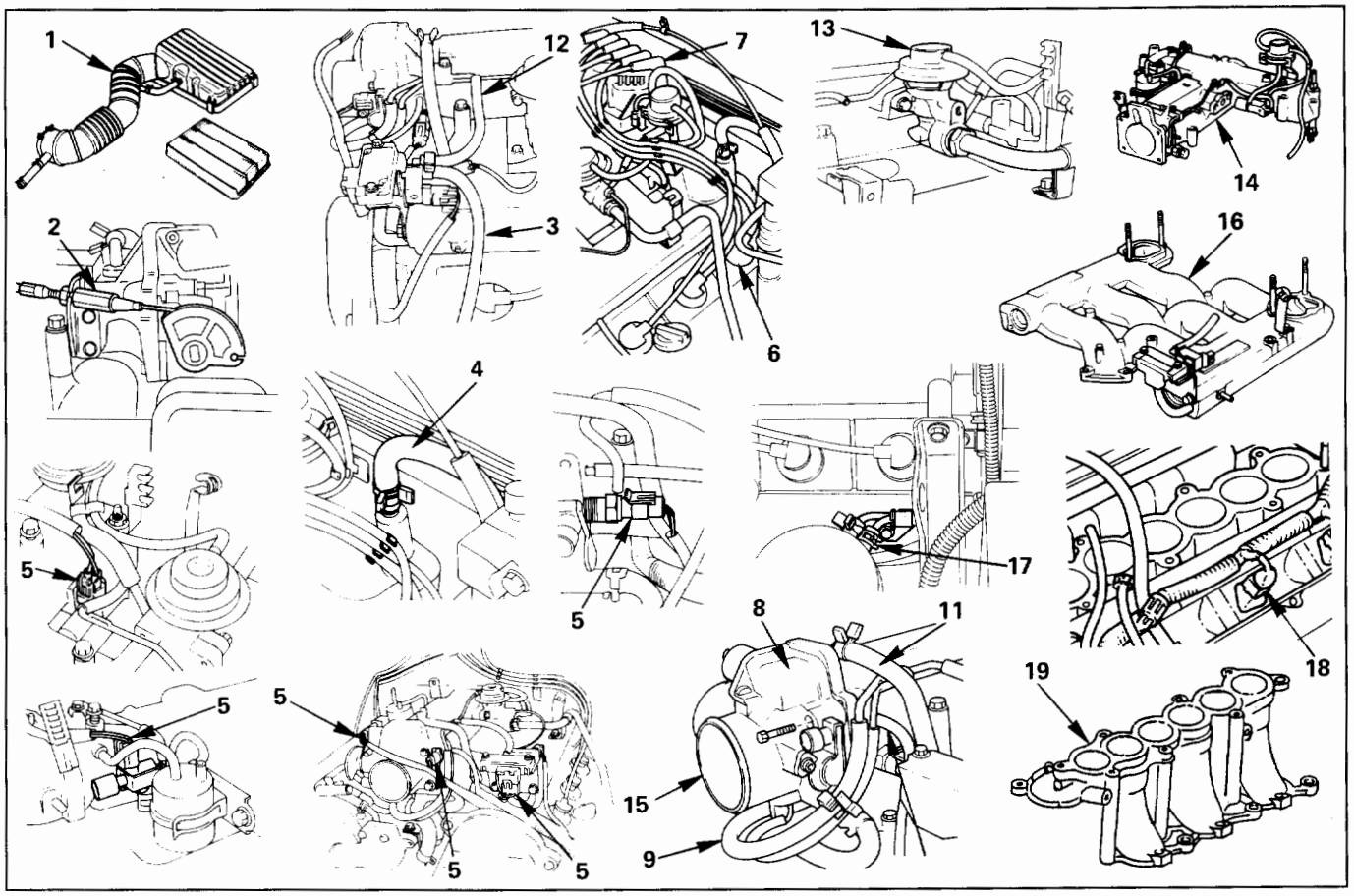

Fig. 6A1-17

REMOVAL

Preparation: Battery ground cable

1. **Air cleaner assembly**
2. **Accelerator Pedal cable**
   - Disconnect from throttle body and cable bracket.
3. **Canister vacuum hose**
   - Disconnect from Vacuum Switching Valve (VSV).
4. **Vacuum booster hose**
   - Disconnect from common chamber.
5. **Connectors**
   - Disconnect from Idle Air Control Valve, Throttle Position Sensor, Manifold Absolute Pressure, canister VSV, Exhaust Gas Recirculation (EGR) VSV, Intake Air Temperature and vacuum tank VSV.
6. **High tension cables**
   - Disconnect from cylinder head cover.
7. **Ignition Control Module assembly**
   - Disconnect three Electronic Ignition connectors.
   - Remove three Electronic Ignition bracket fixing bolts, and remove Electronic Ignition assembly with plug wires.
8. **Throttle body**
   - Remove four fixing bolts.
9. **Vacuum hoses**
   - Disconnect vacuum hoses on canister VSV and EGR VSV from the throttle body.
10. **Fuel Pressure Control Valve vacuum hose**
    - Disconnect from common chamber duct.
11. **Positive Crankcase Ventilation hose**
    - Disconnect from common chamber duct.
12. **Evaporative Emission Canister Purge hose**
    - Disconnect from common chamber duct.
13. **EGR Valve assembly**
    - Remove EGR Valve assembly and four pipe fixing bolts from common chamber duct and exhaust manifold.
14. **Common chamber duct**
    - Remove four bolts and nuts and three bracket fixing bolts.
    - Remove the common chamber duct.
15. **Throttle body**
    - Disconnect water hose from throttle body. At this time, pinch the hose with pinch-off pliers to prevent water leakage.
16. **Common chamber**
    - Remove six bolts and two nuts.
    - Remove common chamber fixing bolts on the rear side of common chamber, then remove common chamber.

17. Fuel hoses
- Disconnect feed and return fuel hoses from fuel pipes, and remove two bracket fixing bolts on the cylinder head cover.

18. Fuel injector connectors
- Disconnect from injectors.

19. Intake manifold
- Remove engine harness bracket on RH side.
- Remove two bolts and four nuts, and remove intake manifold.

INSTALLATION

19. Intake manifold
- Tighten bolts and nuts to the specified torque.

Bolts

Torque	N·m (lb·ft)	24 (17)

Nuts

Torque	N·m (lb·ft)	24 (17)

18. Fuel injector connectors
- Connect each connector.

17. Fuel hoses
- Connect the hoses securely and install the bolts on the head cover.

16. Common chamber
- Tighten bolts and nuts to the specified torque.

Bolts

Torque	N·m (lb·ft)	24 (17)

Nuts

Torque	N·m (lb·ft)	24 (17)

15. Throttle body
- Connect surely the water hose.

14. Common chamber duct
- Tighten bolts and nuts to the specified torque.

Bolts

Torque	N·m (lb·ft)	24 (17)

Nuts

Torque	N·m (lb·ft)	24 (17)

13. Exhaust Gas Recirculation Valve assembly
- Tighten bolts to the specified torque.

Exhaust Gas Recirculation Valve Side

Torque	N·m (lb·in)	8 (69)

Exhaust Manifold Side

Torque	N·m (lb·ft)	28 (21)

12. Evaporative Emission Canister Purge hose

11. Positive Crankcase Ventilation hose

10. Fuel Pressure Control Valve vacuum hose

8. Throttle body
- Tighten bolts to the specified torque.

Torque	N·m (lb·ft)	19 (14)

9. Vacuum hose
- Connect vacuum hoses on canister Vacuum Switching Valve and Exhaust Gas Recirculation Vacuum Switching Valve to the throttle body.

7. Ignition Control Module assembly
- Tighten bolts to the specified torque and connect connector.

Torque	N·m (lb·ft)	19 (14)

6. High tension cables

5. Connectors
- Connect each connector without fail.

4. Vacuum booster hose

3. Canister vacuum hose

2. Accelerator Pedal cable
- Accelerator pedal cable adjustment (Fig. 6A1-18)
  1) Loosen the adjusting nut and screw cap.
  2) Pull outer cable while fully closing the throttle valve.
  3) Tighten adjusting nut and screw cap temporarily.
  4) Loosen adjusting nut by three turns and tighten screw cap.
     Then, manually operating the throttle valve, make sure that the valve lever returns up to the stopper screw.
     If it does not reach the stopper screw, repeat from step 1).

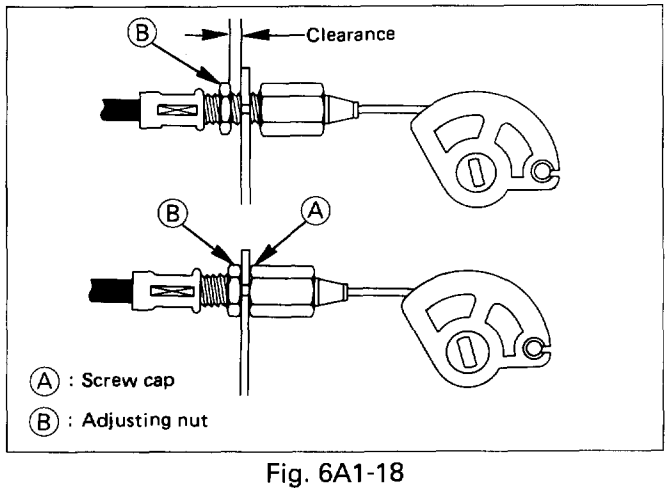

Fig. 6A1-18

1. Air cleaner assembly

LH EXHAUST MANIFOLD

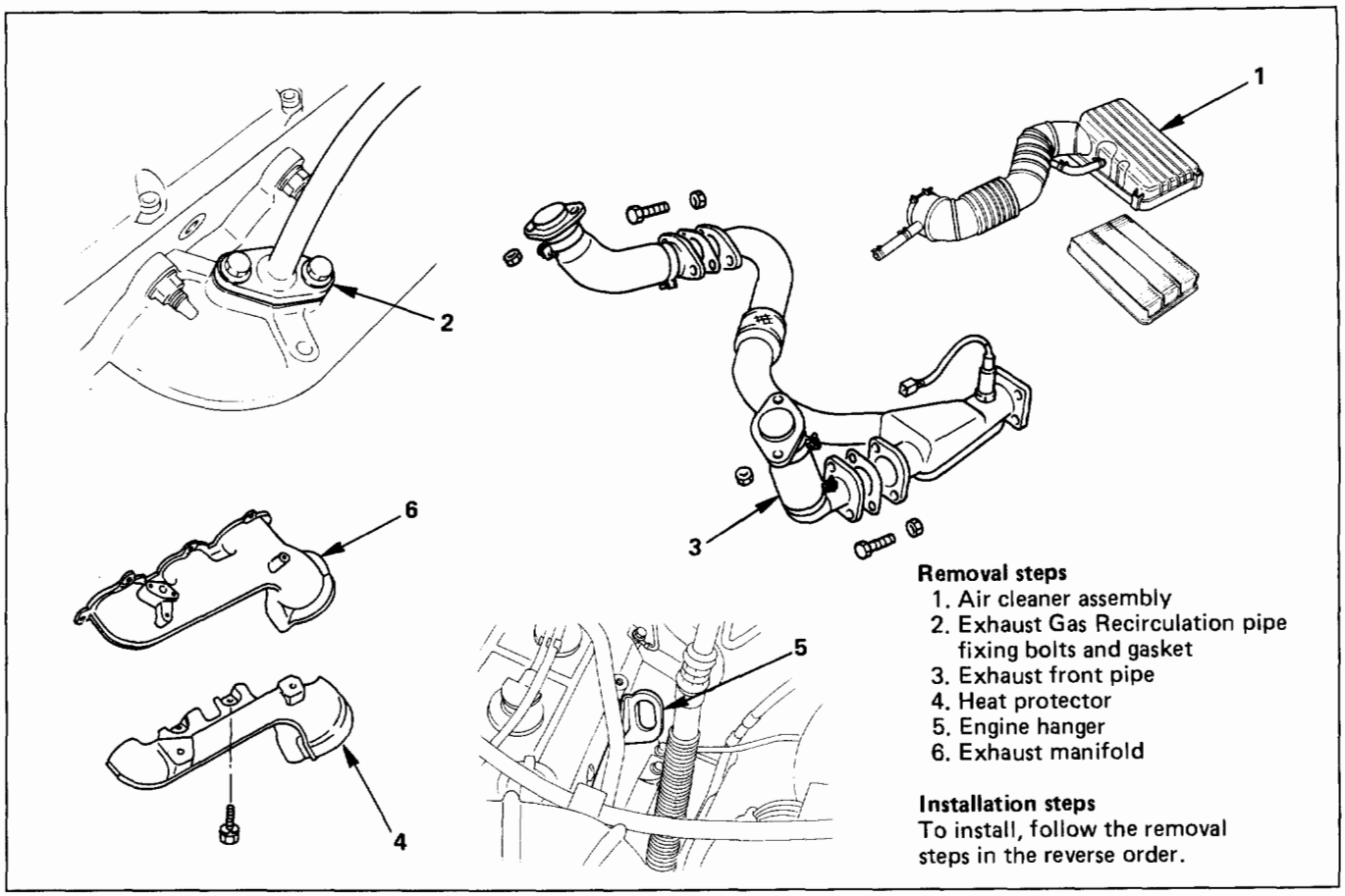

Fig. 6A1-19

REMOVAL

Preparation: Battery ground cable

1. **Air cleaner assembly**
2. **Exhaust Gas Recirculation pipe fixing bolts and gasket**
   - Remove from exhaust manifold.
3. **Exhaust front pipe**
   - Remove two stud nuts and two bolts and nuts, then disconnect front pipe.
4. **Heat protector**
   - Remove five fixing bolts, then the heat protector.
5. **Engine hanger**
   - Remove bolt and nut, then engine hanger.
6. **Exhaust manifold**
   - Remove seven nuts and remove exhaust manifold from the engine.

INSTALLATION

6. **Exhaust manifold**
   - Tighten nuts to the specified torque with new one.

Torque	N·m (lb·ft)	57 (42)

5. **Engine hanger**
4. **Heat protector**
3. **Exhaust front pipe**
   - Tighten two stud nuts and two bolts and nuts to the specified torque.

Stud nuts

Torque	N·m (lb·ft)	67 (49)

Bolts and nuts

Torque	N·m (lb·ft)	43 (32)

2. **Exhaust Gas Recirculation pipe fixing bolts and gasket**
   - Tighten bolts to the specified torque.

Torque	N·m (lb·ft)	28 (21)

1. **Air cleaner assembly**

RH EXHAUST MANIFOLD

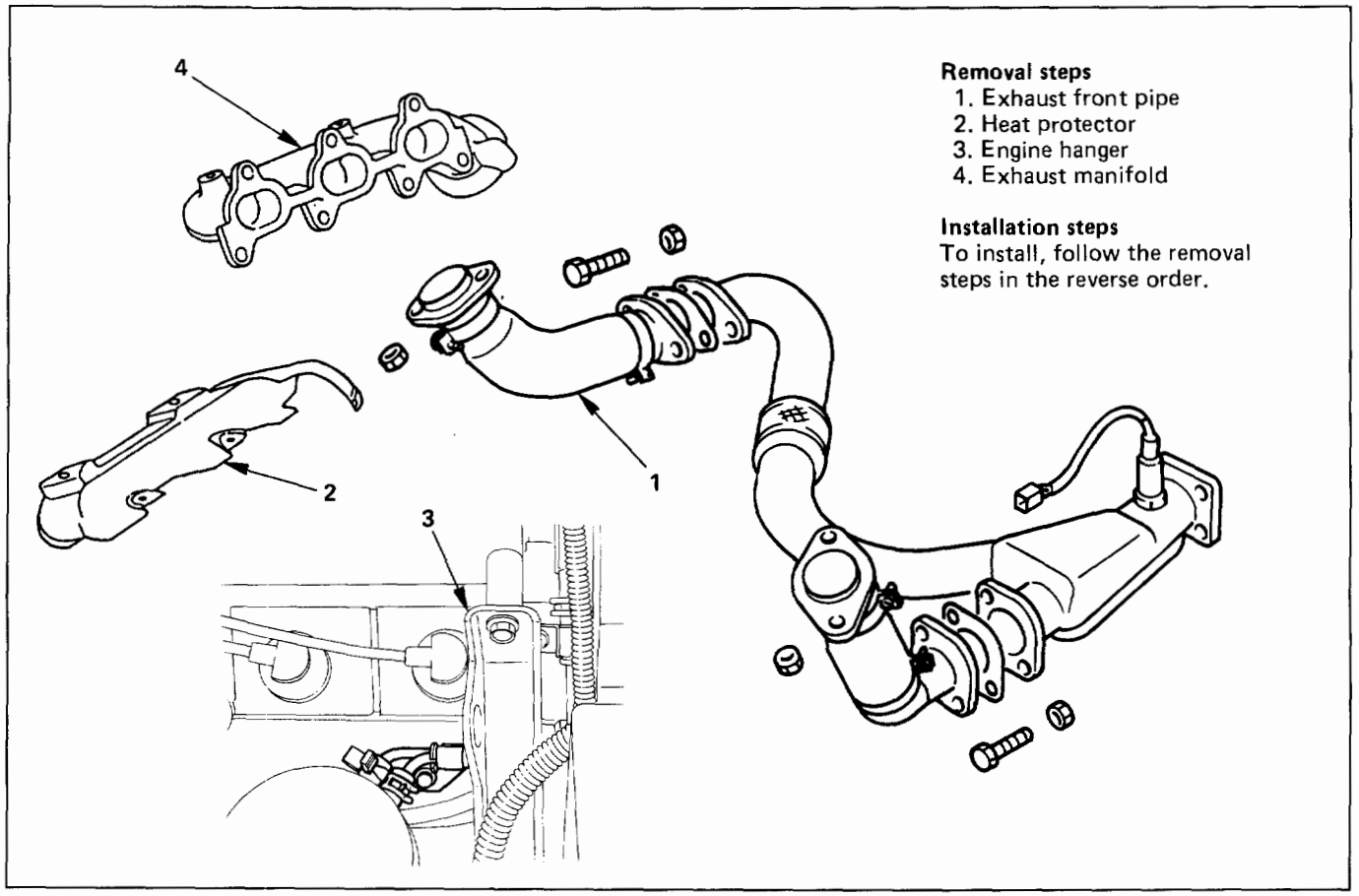

Fig. 6A1-20

REMOVAL

Preparation: Battery ground cable

1. **Exhaust front pipe**
   - Remove two stud nuts and two bolts and nuts, then disconnect front pipe.
2. **Heat protector**
   - Remove five fixing bolts, then the heat protector.
3. **Engine hanger**
   - Remove bolts and nuts that secure the hanger to the exhaust manifold and cylinder head.
4. **Exhaust manifold**
   - Remove seven nuts, then the exhaust manifold.

INSTALLATION

4. **Exhaust manifold**
   - Tighten bolts to the specified torque.

Torque	N·m (lb·ft)	57 (42)

3. **Engine hanger**
2. **Heat protector**
1. **Exhaust front pipe**
   - Tighten two stud nuts and two bolts and nuts to the specified torque.

Stud nuts

Torque	N·m (lb·ft)	67 (49)

Bolts and nuts

Torque	N·m (lb·ft)	43 (32)

TIMING BELT

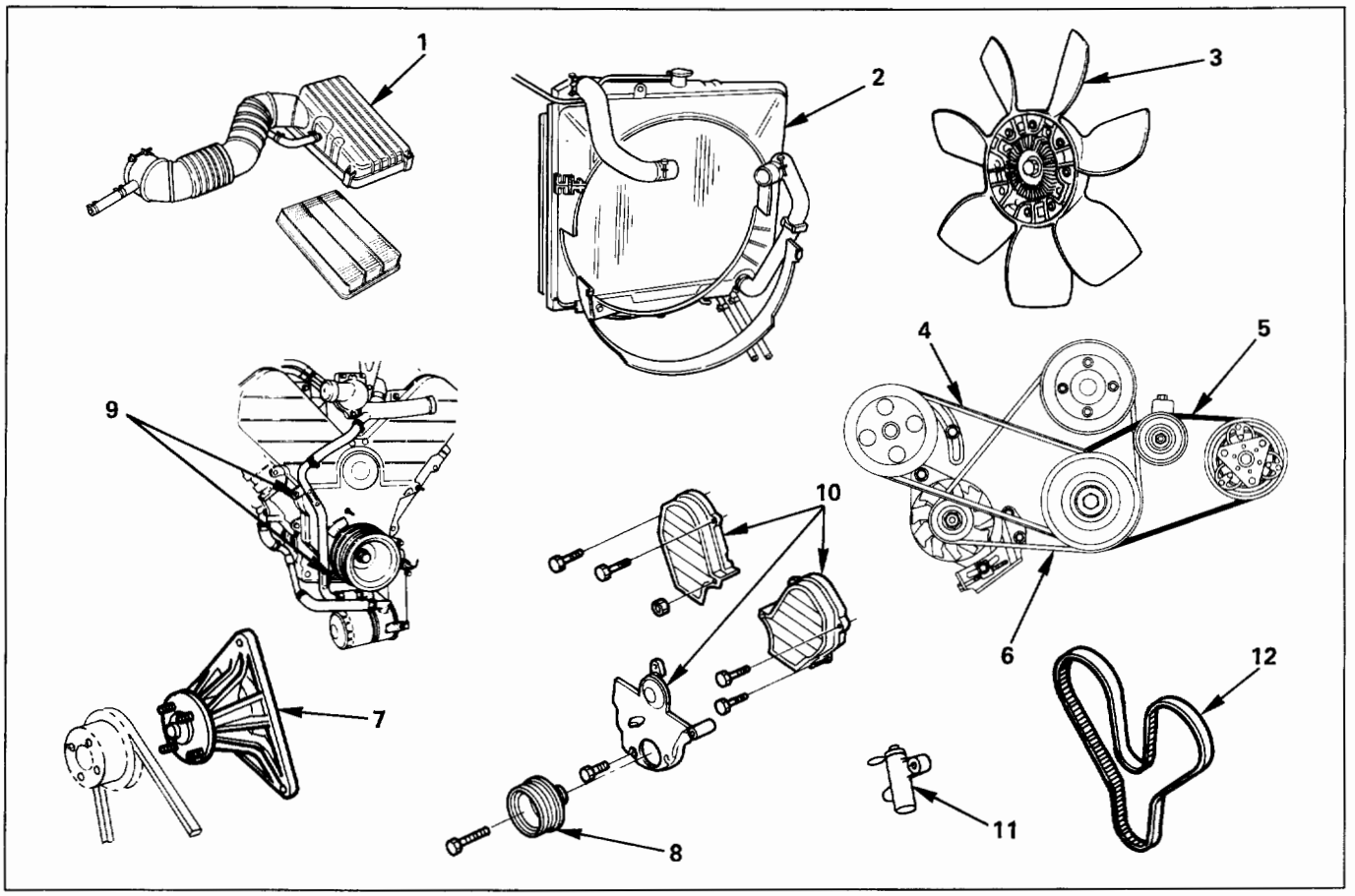

Fig. 6A1-21

REMOVAL

Preparation: Battery ground cable

1. **Air cleaner assembly**
2. **Radiator upper fan shroud**
   - Remove from radiator.
3. **Cooling fan assembly**
   - Remove four nuts, then the cooling fan assembly.
4. **Power steering pump drive belt**
5. **Air Conditioning compressor drive belt**
6. **Generator drive belt**
7. **Fan pulley assembly**
8. **Crankshaft pulley assembly**
   - Using special tool J-8614-01, hold crankshaft pulley.
   - Remove center bolt, then the pulley.
9. **Oil cooler hose**
   - Remove two cooler hose bracket fixing bolts on the timing cover.
10. **Timing belt cover**
11. **Pusher**

CAUTION:
The pusher prevents air from entering the oil chamber. Its rod must always be facing upward.

12. **Timing belt**
    - To prevent the timing belt from getting out of position, put the alignment mark on the cam pulley, the crankshaft pulley and the timing belt before removing the timing belt.

CAUTIONS:

1) Do not bend or twist the belt, otherwise its core could be damaged. The belt should not be bent at a radius less than 30mm.
2) Do not allow oil or other chemical substances to come in contact with the belt. They will shorten the belt life.
3) Do not attempt to pry or stretch the belt with a screwdriver or any other tool during installation.
4) Store timing belt in a cool and dark place. Never expose the belt to direct sunlight or heat.

INSTALLATION

12. Timing belt

1) Align groove of crankshaft timing pulley with mark on oil pump. (Fig. 6A1-22)
2) Align the marks on the camshaft timing pulleys with the corresponding dots on the front plate. (Fig. 6A1-23)

NOTE:
When timing marks are aligned, no pistons will be on T.D.C.

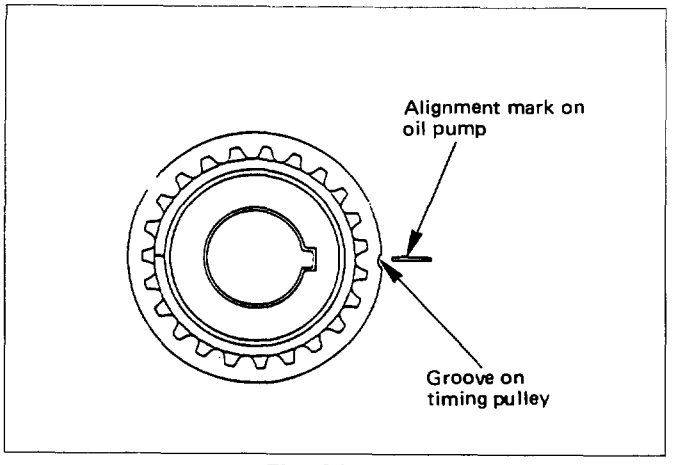

Fig. 6A1-22

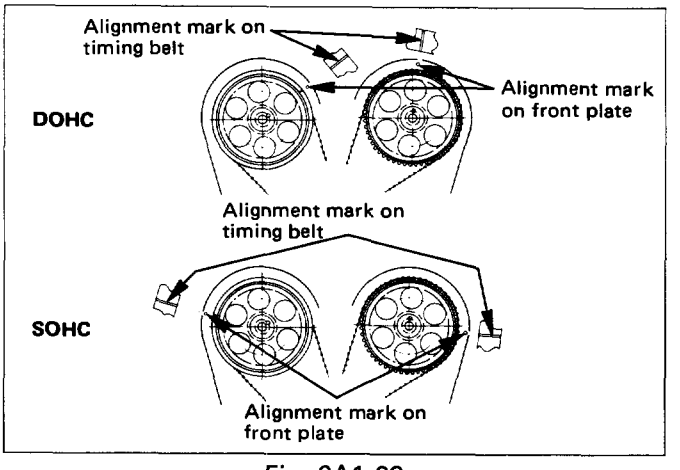

Fig. 6A1-23

3) Install timing belt. Align the dotted alignment mark on the timing belt with the mark on the crankshaft gear. (Fig. 6A1-24, Fig. 6A1-25)

NOTE:
For correct belt installation, the letters the belt must be able to be read as viewed from the front of the vehicle. (Fig. 6A1-25)

It is recommended for easy installation that the belt be secured with double clips after it is installed to each pulley. (Fig. 6A1-26)

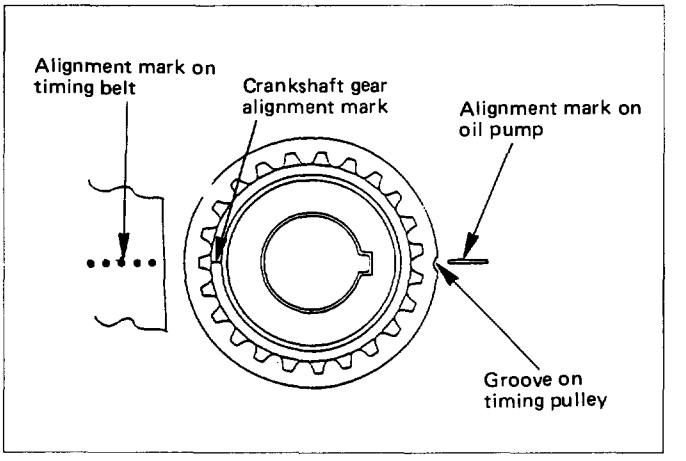

Fig. 6A1-24

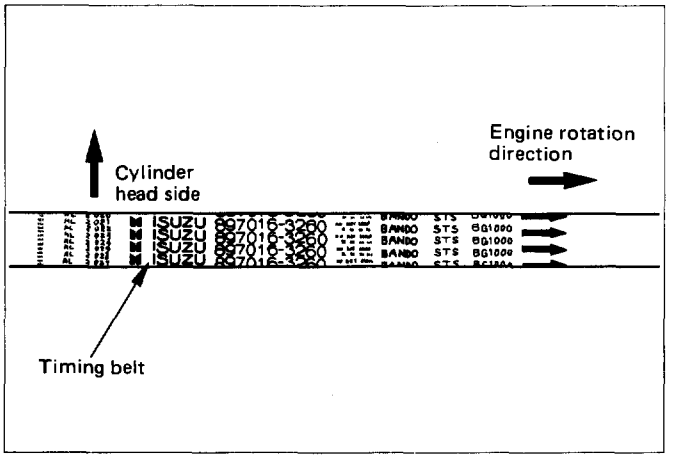

Fig. 6A1-25

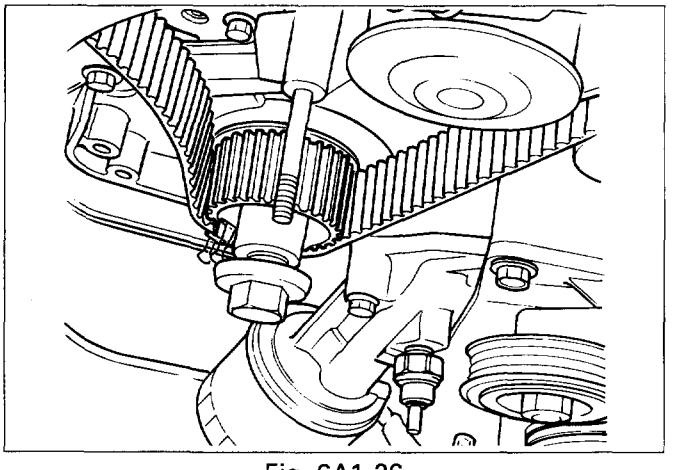

Fig. 6A1-26

4) Align the alignment mark (white line) on the timing belt with the alignment mark on the RH bank camshaft timing pulley (on the left side as viewed from the front of the vehicle). Secure the belt with a double clip. (Fig. 6A1-27)

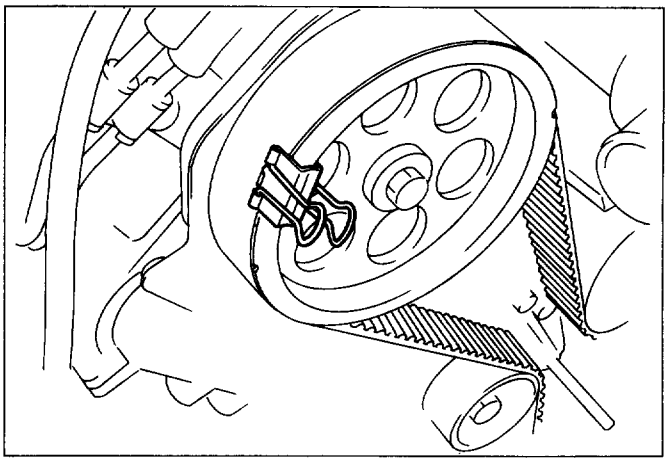

Fig. 6A1-27

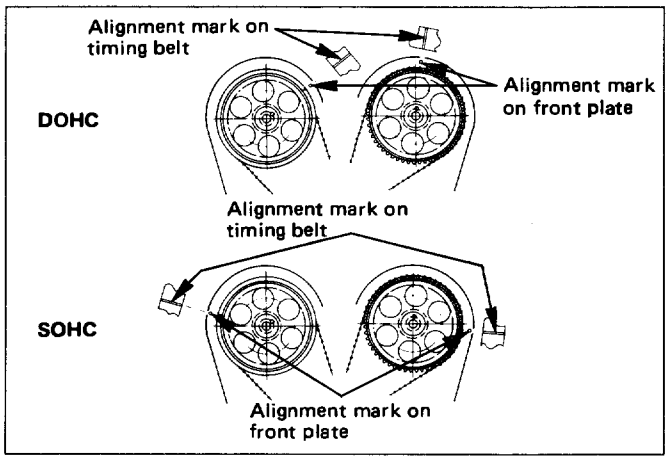

Fig. 6A1-28

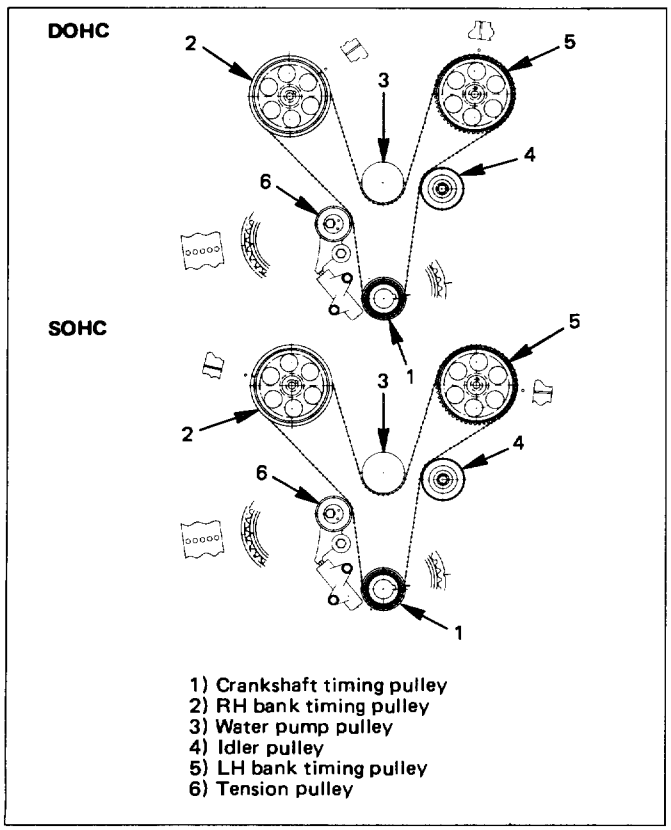

Fig. 6A1-29

5) Turn the crankshaft counterclockwise to remove the belt slack between the crankshaft timing pulley and the RH bank camshaft timing pulley.
6) Install the belt on the water pump pulley.
7) Install the belt on the idler pulley.
8) Align the alignment mark (white line) on the timing belt with the alignment mark on the LH bank camshaft timing pulley.
   If the belt is difficult to install, turn the camshaft pulley slightly counterclockwise.
9) Install crankshaft pulley temporarily and tighten center bolt by hand (do not use a wrench). Turn the crankshaft pulley clockwise to give some slack between the crankshaft timing pulley and the RH bank camshaft timing pulley.
10) Install the pusher while pushing the tension pulley to the belt.
11) Pull out the pin from the pusher.

NOTE:
When reusing the pusher, press the pusher to retract the rod (1.4 mm piano wire). (Fig. 6A1-30)

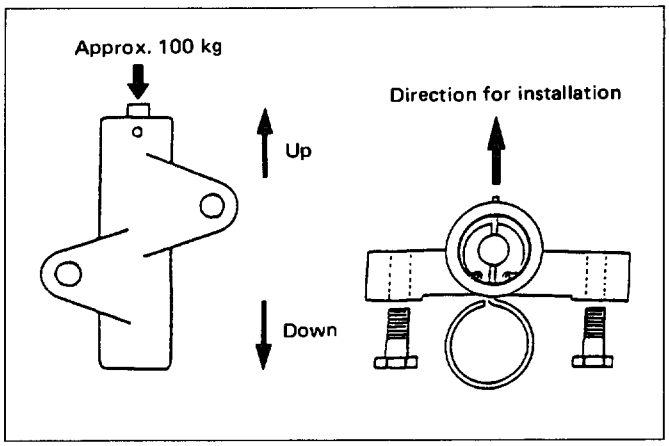

Fig. 6A1-30

12) Remove double clips from pulleys. Turn the crankshaft pulley clockwise by two turns. Measure the rod protrusion to ensure it is within the standard. (Fig. 6A1-31)

Standard	mm (in)	4 – 6 (0.16 – 0.24)

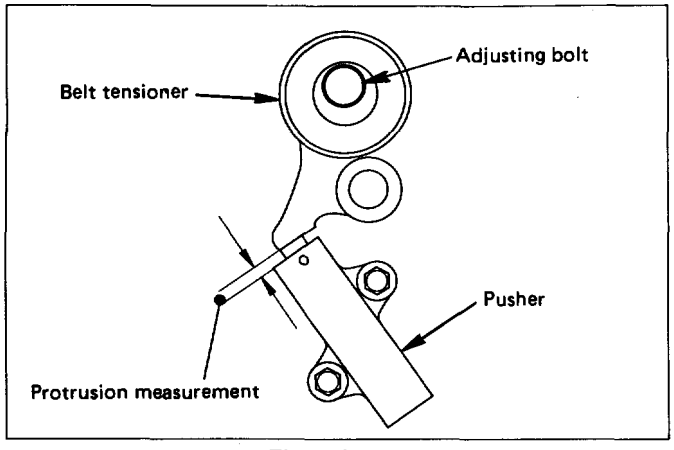

Fig. 6A1-31

13) If out of standard, remove pusher, loosen adjusting bolt, and readjust. Repeat from step 11).

Tighten adjusting bolt to the specified torque

Torque	N·m (lb·ft)	42 (31)

11. Pusher
- Tighten bolt to the specified torque.

Torque	N·m (lb·ft)	19 (14)

10. Timing belt cover
- Remove crankshaft pulley that was installed in step 9.
- Tighten bolts to the specified torque.

Torque	N·m (lb·ft)	17 (12)

9. Oil cooler hose
- Tighten oil cooler hose bracket bolts to the specified torque.

Torque	N·m (lb·ft)	22 (16)

8. Crankshaft pulley
- Using special tool J-8614-01, hold the crankshaft pulley.
- Tighten center bolt to the specified torque.

Torque	N·m (lb·ft)	167 (123)

7. Fan pulley assembly
- Tighten fixing bolt to the specified torque.

Torque	N·m (lb·ft)	22 (16)

6. Generator drive belt
- Engage and adjust.
- Refer to Section 6B "Drive belt adjustment".

5. Air Conditioning drive belt
- Engage and adjust.
- Refer to Section 6B "Drive belt adjustment".

4. Power steering pump drive belt
- Engage and adjust.
- Refer to Section 6B "Drive belt adjustment".

3. Cooling fan assembly
- Tighten nuts to the specified torque.

Torque	N·m (lb·in)	8 (69)

2. Radiator upper fan shroud

1. Air cleaner assembly

CRANKSHAFT PULLEY

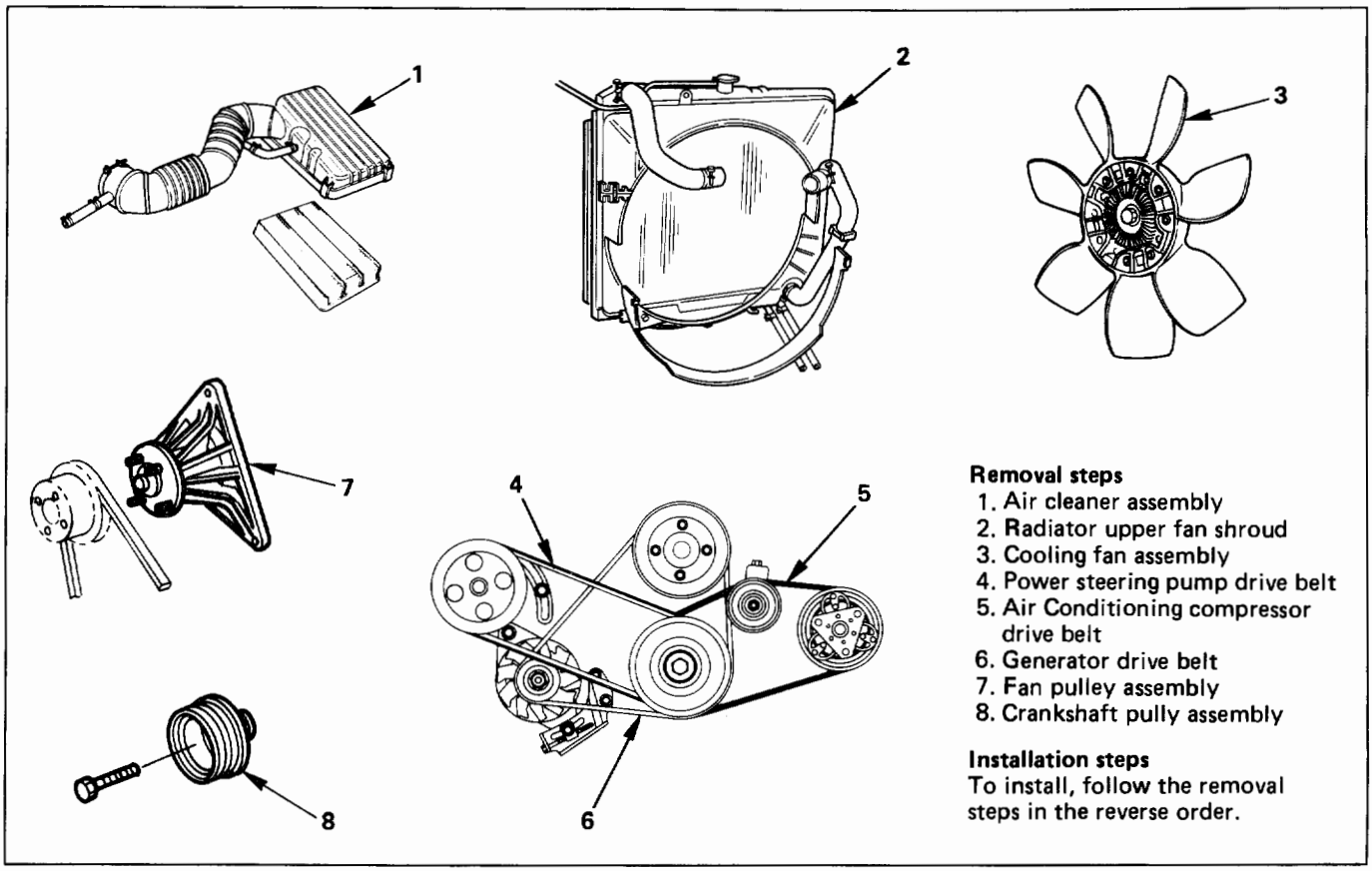

Fig. 6A1-32

REMOVAL

Preparation: Battery ground cable

1. **Air cleaner assembly**
2. **Radiator upper fan shroud**
   - Remove from radiator.
3. **Cooling fan assembly**
   - Remove four nuts, then the cooling fan assembly.
4. **Power steering pump drive belt**
5. **Air Conditioning compressor pump drive belt**
6. **Generator drive belt**
7. **Fan pulley assembly**
8. **Crankshaft pulley assembly**
   - Using special tool J-8614-01, hold crankshaft pulley.
   - Remove center bolt, then the pulley.

INSTALLATION

8. **Crankshaft pulley**
   - Using special tool J-8614-01, hold the crankshaft pulley.
   - Tighten center bolt to the specified torque.

Torque N·m (lb·ft)	167 (123)

7. **Fan pulley assembly**
   - Tighten fixing bolt to the specified torque.

Torque N·m (lb·ft)	22 (16)

6. **Generator drive belt**
   - Engage and adjust.
   - Refer to Section 6B "Drive belt adjustment".
5. **Air Conditioning compressor drive belt**
   - Engage and adjust.
   - Refer to Section 6B "Drive belt adjustment".
4. **Power steering pump drive belt**
   - Engage and adjust.
   - Refer to Section 6B "Drive belt adjustment".
3. **Cooling fan assembly**
   - Tighten nuts to the specified torque.

Torque N·m (lb·in)	8 (69)

2. **Radiator upper fan shroud**
1. **Air cleaner assembly**

CAMSHAFT/ROCKER ARM (SOHC)

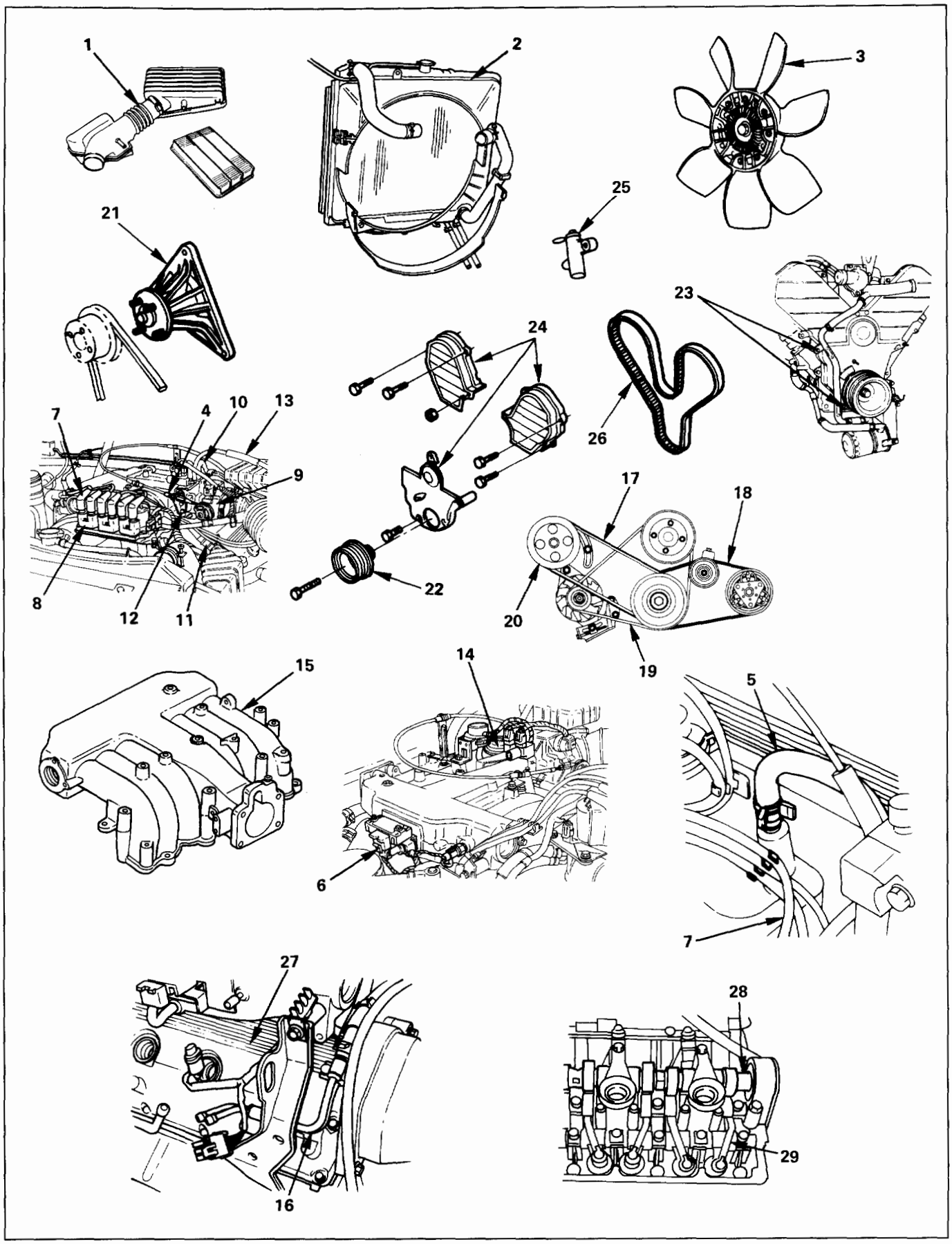

Fig. 6A1-33

REMOVAL

Preparation: Battery ground cable

1. **Air cleaner assembly**
2. **Radiator upper fan shroud**
   - Remove from radiator.
3. **Cooling fan assembly**
   - Remove four nuts, then the cooling fan assembly.
4. **Accelerator Pedal cable**
   - Disconnect from throttle body and cable bracket.
5. **Vacuum booster hose**
   - Disconnect from common chamber.
6. **Connectors**
   - Disconnect from Manifold Absolute Pressure, canister Vacuum Switching Valve (VSV), Exhaust Gas Recirculation VSV, Intake Air Temperature and ground cable.
7. **High tension cables**
   - Disconnect from cylinder head cover.
8. **Ignition Control Module assembly**
   - Disconnect three Electronic Ignition connectors.
   - Remove three Electronic Ignition bracket fixing bolts, and remove Electronic Ignition assembly with high tension cables.
9. **Throttle body**
   - Remove four fixing bolts.
10. **Vacuum hoses**
    - Disconnect vacuum hoses on canister VSV and Exhaust Gas Recirculation VSV from the throttle body.
11. **Positive Crankcase Ventilation hose**
    - Disconnect from common chamber.
12. **Fuel Pressure Control Valve vacuum hose**
    - Disconnect from common chamber.
13. **Evaporative Emission Canister Purge hose**
    - Disconnect from common chamber.
14. **Exhaust Gas Recirculation Valve assembly**
    - Remove five bolts from common chamber, exhaust manifold and cylinder head cover.
15. **Common chamber**
    - Remove six bolts, two nuts and three bracket fixing bolts, then remove the common chamber.
16. **Fuel hoses**
    - Disconnect feed and return fuel hoses from fuel pipes, and remove two bracket fixing bolts on the cylinder head cover.
17. **Power steering pump drive belt**
18. **Air Conditioning compressor drive belt**
19. **Generator drive belt**
20. **Power steering pump**
21. **Fan pulley assembly**
22. **Crankshaft pulley assembly**
    - Using special tool J-8614-01, hold crankshaft pulley.
    - Remove center bolt, then the pulley.
23. **Oil cooler hose**
    - Remove two cooler hose bracket fixing bolts on the timing belt cover.
24. **Timing belt cover**
25. **Pusher**

CAUTION:
The pusher prevents air from entering the oil chamber. Its rod must always be facing upward.

26. **Timing belt**

CAUTIONS:

1) Do not bend or twist the belt, otherwise its core could be damaged. The belt should not be bent at a radius less than 30mm.
2) Do not allow oil or other chemical substances to come in contact with the belt. They will shorten the belt life.
3) Do not attempt to pry or stretch the belt with a screwdriver or any other tool during installation.
4) Store timing belt in a cool and dark place. Never expose the belt to direct sunlight or heat.

27. **Cylinder head cover**
    - Remove 11 fixing bolts, then the cylinder head cover.
28. **Camshaft**
    - Camshaft pulley fixing bolt and camshaft pulley
    - Front plate fixing bolts and front plate
    - Camshaft bracket fixing bolts and camshaft
29. **Rocker arm**
    - Fixing bolts and rocker arm

INSTALLATION

29. **Rocker arm**
    - Tighten bolts to the specified torque. For the tightening order, see Fig. 6A1-34.

Torque	N·m (lb·ft)	18 (13)

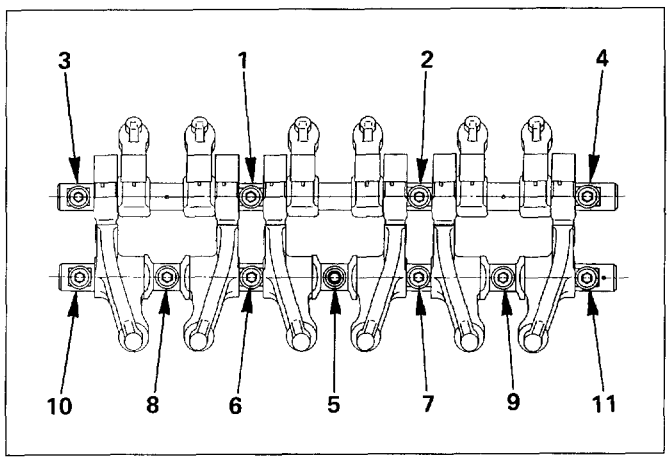

Fig. 6A1-34

28. Camshaft

- Apply sealant (TB-1207B or equivalent) to contact surfaces of cylinder head with front and rear camshaft bracket housing as shown in Fig. 6A1-35.
- Tighten camshaft bracket housing fixing bolts in sequence in illustration (Fig. 6A1-36).

Torque	N·m (lb·in)	M6: 8 (69)
	N·m (lb·ft)	M8: 18 (13)

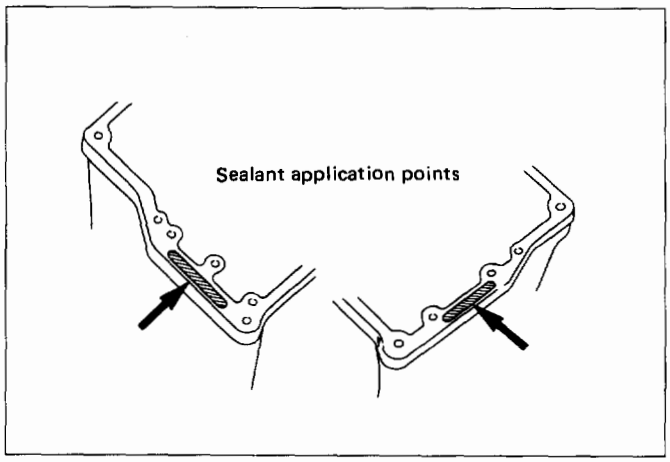

Fig. 6A1-35

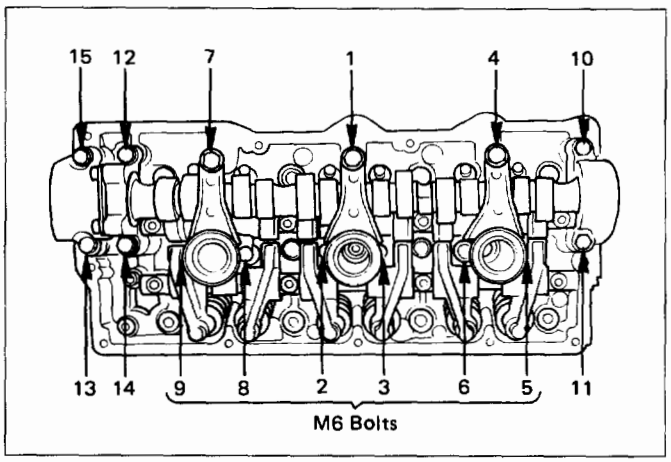

Fig. 6A1-36

- Tighten front plate fixing bolts to the specified torque.

Torque	N·m (lb·ft)	17 (12)

- Tighten camshaft pulley fixing bolts to the specified torque.

Torque	N·m (lb·ft)	63 (46)

27. Cylinder head cover

- Clean the sealing surface of cylinder head and cylinder head cover to remove oil and liquid packing completely. Apply liquid packing (TB-1207B or equivalent) of bead diameter 2-3 mm to four places of arched area of camshaft brackets on front and rear sides. (Fig.6A1-37)
- Tighten bolts to the specified torque.

Torque	N·m (lb·in)	8 (69)

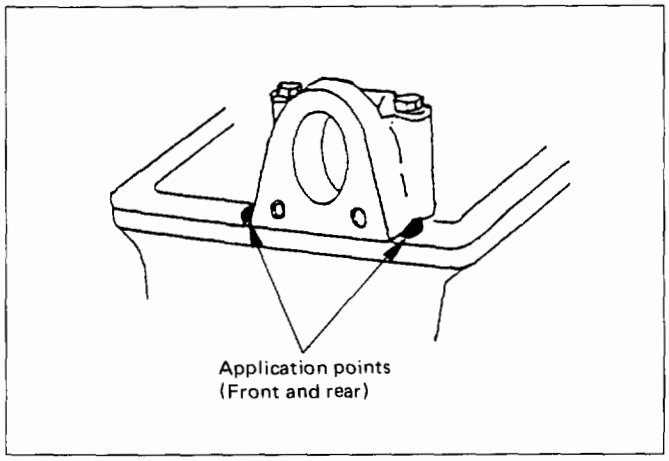

Fig. 6A1-37

26. Timing belt

- Refer to "Timing belt removal and installation" in this section.

25. Pusher

- Tighten bolts to the specified torque.

Torque	N·m (lb·ft)	19 (14)

24. Timing belt cover

- Remove crankshaft pulley that was installed in step 29.
- Tighten bolts to the specified torque.

Torque	N·m (lb·ft)	18 (13)

23. Oil cooler hose

- Tighten oil cooler hose bracket bolts to the specified torque.

Torque	N·m (lb·ft)	18 (13)

22. Crankshaft pulley assembly

- Using special tool J-8614-001, hold the crankshaft pulley.
- Tighten center bolt to the specified torque.

Torque	N·m (lb·ft)	167 (123)

21. Fan pulley assembly
- Tighten fixing bolt to the specified torque.

Torque	N·m (lb·ft)	22 (16)

20. Power steering pump
- Tighten pump fixing bolts to the specified torque.

Torque	N·m (lb·ft)	56 (41)

19. Generator drive belt
- Engage and adjust.
- Refer to Section 6B "Drive belt adjustment".

18. Air Conditioning compressor drive belt
- Engage and adjust.
- Refer to Section 6B "Drive belt adjustment".

17. Power steering pump drive belt
- Engage and adjust.
- Refer to Section 6B "Drive belt adjustment".

16. Fuel hoses
- Connect surely the hoses and install the bolts on the head cover.

15. Common chamber
- Tighten bolts and nuts to the specified torque.

Bolts

Torque	N·m (lb·ft)	24 (17)

Nuts

Torque	N·m (lb·ft)	24 (17)

14. Exhaust Gas Recirculation Valve assembly
- Tighten bolts to the specified torque.

Exhaust Gas Recirculation Valve Side

Torque	N·m (lb·in)	8 (69)

Exhaust Manifold Side

Torque	N·m (lb·ft)	28 (21)

13. Evaporative Emission Canister Purge hose
12. Fuel Pressure Control Valve vacuum hose
11. Positive Crankcase Ventilation hose
9. Throttle body
- Tighten bolts to the specified torque.

Torque	N·m (lb·ft)	19 (14)

10. Vacuum hoses
- Connect vacuum hoses on canister Vacuum Switching Valve and Exhaust Gas Recirculation Vacuum Switching Valve to the throttle body.

8. Ignition Control Module assembly
- Tighten bolts to the specified torque and connect connector.

Torque	N·m (lb·ft)	19 (14)

7. High tension cables
6. Connectors
- Connect each connector carefully.

5. Vacuum booster hose
4. Accelerator Pedal cable
- Accelerator pedal cable adjustment (Fig. 6A1-38)
  1) Loosen adjusting nut and screw cap.
  2) Pull outer cable while closing fully the throttle valve.
  3) Tighten adjusting nut and screw cap temporarily.
  4) Loosen adjusting nut by three turns and tighten screw cap.
     Then, manually operating the throttle valve, make sure that the valve lever returns up to the stopper screw.
     If it does not reach the stopper screw, repeat from step 1).

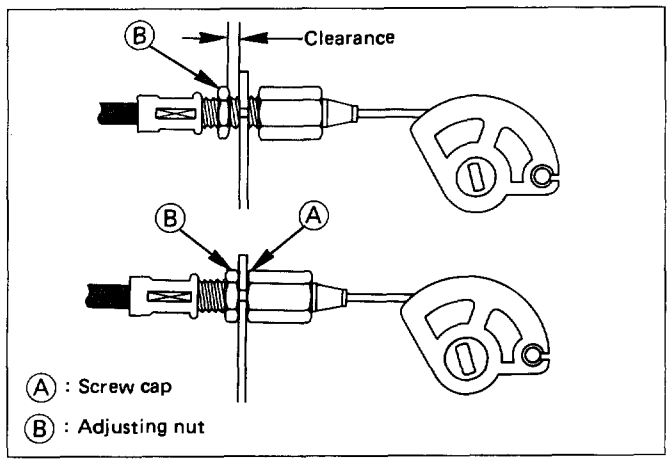

Fig. 6A1-38

3. Cooling fan assembly
- Tighten fixing bolts to the specified torque.

Torque	N·m (lb·in)	8 (69)

2. Radiator upper fan shroud
1. Air cleaner assembly

CAMSHAFT/SWING ARM/HYDRAULIC LASH ADJUSTERS (DOHC)

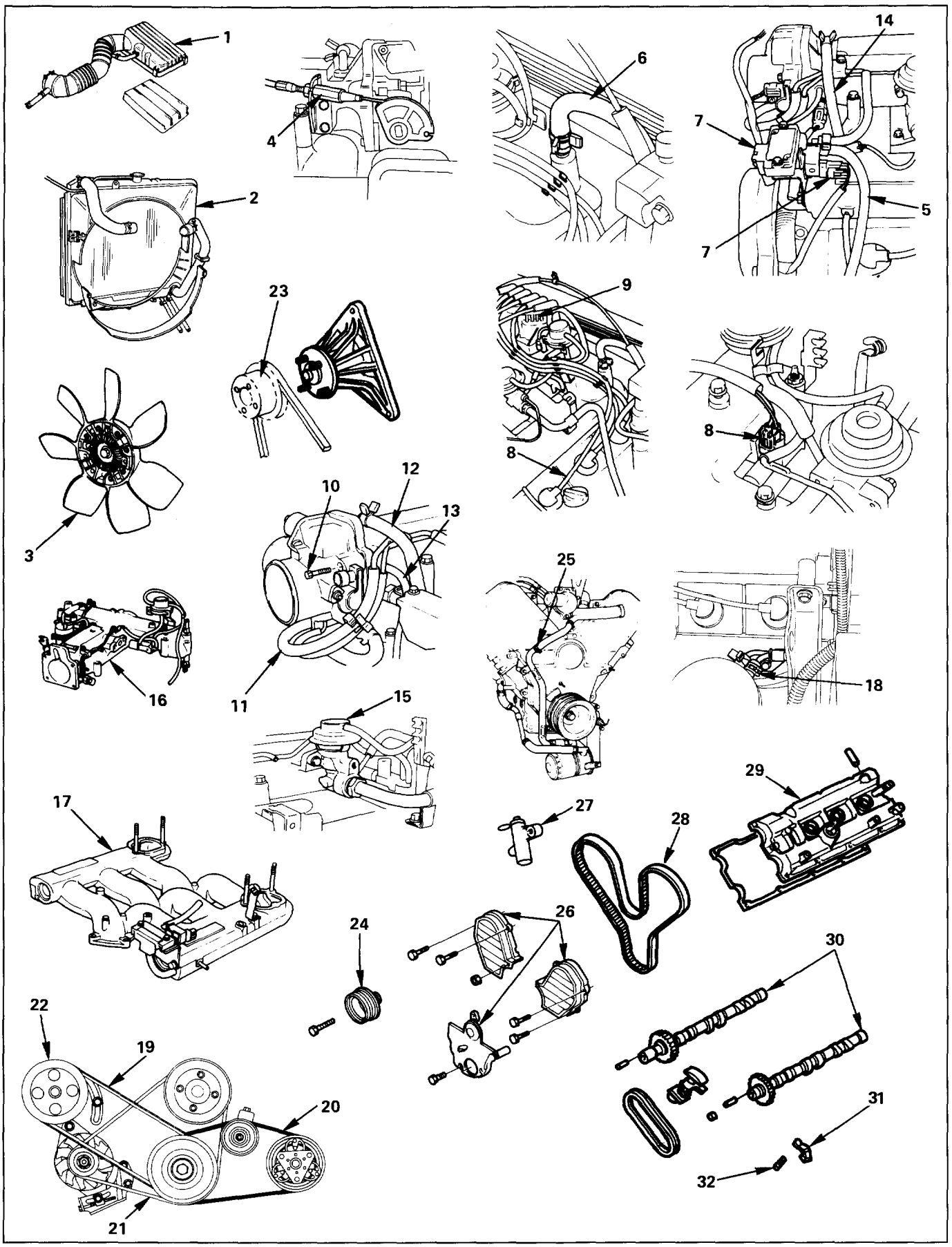

Fig. 6A1-39

REMOVAL

Preparation: Battery ground cable

1. **Air cleaner assembly**
2. **Radiator upper fan shroud**
   - Remove from radiator.
3. **Cooling fan assembly**
   - Remove four nuts, then the cooling fan assembly.
4. **Accelerator Pedal cable**
   - Disconnect from throttle body and cable bracket.
5. **Canister vacuum hose**
   - Disconnect from vacuum pipe.
6. **Air vacuum hose**
   - Disconnect from common chamber.
7. **Connectors**
   - Disconnect from Manifold Absolute, Canister Vacuum Switching Valve (VSV), Exhaust Gas Recirculation VSV, Intake Air Temperature and ground cable.
8. **High tension cables**
   - Disconnect from cylinder head cover.
9. **Ignition Control Module assembly**
   - Disconnect three Electronic Ignition connectors.
   - Remove three Electronic Ignition bracket fixing bolts, and remove Electronic Ignition assembly with high tension cables.
10. **Throttle body**
    - Remove four fixing bolts.
11. **Vacuum hoses**
    - Disconnect vacuum hoses on canister VSV and Exhaust Gas Recirculation VSV from the throttle body.
12. **Positive Crankcase Ventilation hose**
    - Disconnect from common chamber.
13. **Fuel Pressure Control Valve vacuum hose**
    - Disconnect from common chamber.
14. **Evaporative Emission Canister Purge hose**
    - Disconnect from common chamber.
15. **Exhaust Gas Recirculation Valve assembly**
    - Remove five bolts from common chamber, exhaust manifold and cylinder head cover.
16. **Common chamber duct**
    - Remove four bolts, four nuts and three bracket fixing bolts, then remove the common chamber duct.
    - Disconnect ground cable from rear side of common chamber.
17. **Common chamber**
    - Remove six bolts, two nuts and three bracket fixing bolts, then remove the common chamber.
18. **Fuel hoses**
    - Disconnect feed and return fuel hoses from fuel pipes, and remove two bracket fixing bolts on the cylinder head cover.
19. **Power steering pump drive belt**
20. **Air Conditioning compressor drive belt**
21. **Generator drive belt**
22. **Power steering pump**
23. **Fan pulley assembly**
24. **Crankshaft pulley assembly**
    - Using special tool J-8614-01, hold crankshaft pulley.
    - Remove center bolt, then the pulley.
25. **Oil cooler hose**
    - Remove two cooler hose bracket fixing bolts on the timing belt cover.
26. **Timing belt cover**
27. **Pusher**

    CAUTION:
    The pusher prevents air from entering the oil chamber. Its rod must always be facing upward.
28. **Timing belt**

    CAUTIONS:
    1) Do not bend or twist the belt, otherwise its core could be damaged. The belt should not be bent at a radius less than 30mm.
    2) Do not allow oil or other chemical substances to come in contact with the belt. They will shorten the belt life.
    3) Do not attempt to pry or stretch the belt with a screwdriver or any other tool during installation.
    4) Store timing belt in a cool and dark place. Never expose the belt to direct sunlight or heat.
29. **Cylinder head cover**
    - Remove 11 fixing bolts, then the cylinder head cover.
30. **Camshaft**
    - Camshaft pulley fixing bolt and camshaft pulley
    - Front plate fixing bolts and front plate
    - Camshaft bracket fixing bolts and camshaft
31. **Swing arm**
    - After removing the swing arm, attach a tag showing the place for swing arm.
32. **Hydraulic lash adjuster (HLA)**
    - After removing the HLA, attach a tag showing the place for HLA.

    CAUTIONS:
    1) Protect precision HLA from dust and foreign materials.
    2) Do not disassemble the HLA.
    3) To clean the HLA, use a clean diesel oil.

INSTALLATION

32. Hydraulic lash adjuster (HLA)
- Install the HLA per removal mark.

31. Swing arm
- Install the swing arm per removal mark.

30. Camshaft
- Tighten camshaft bracket fixing bolts to the specified torque.

Torque N·m (lb·in)	10 (87)

- Tighten front plate fixing bolts to the specified torque.

Torque N·m (lb·ft)	19 (14)

- Tighten camshaft pulley fixing bolts to the specified torque.

Torque N·m (lb·ft)	63 (46)

29. Cylinder head cover
- Clean the sealing surface of cylinder head and cylinder head cover to remove oil and sealing materials completely. Apply sealant (TB-1207B or equivalent) of bead diameter 2-3 mm to four places of arched area of camshaft brackets on front and rear sides. (Fig. 6A1-40)

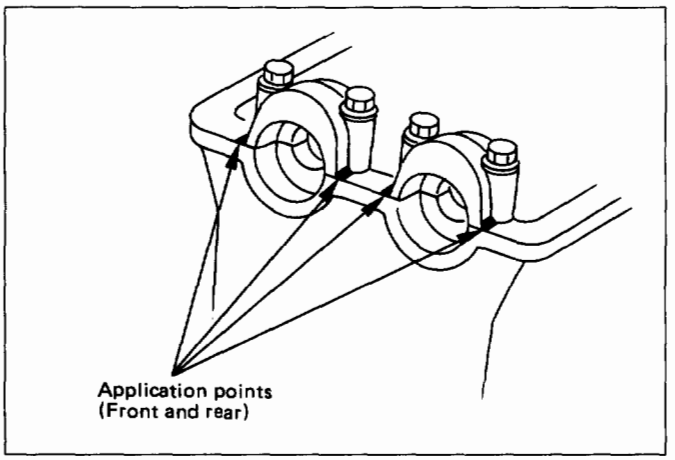

Fig. 6A1-40

- Tighten bolts to the specified torque.

Torque N·m (lb·in)	8 (69)

28. Timing belt
- Refer to "Timing belt removal and installation" in this section.

27. Pusher
- Tighten bolts to the specified torque.

Torque N·m (lb·ft)	19 (14)

26. Timing belt cover
- Remove crankshaft pulley that was installed in step 30.
- Tighten bolts to the specified torque.

Torque N·m (lb·ft)	18 (13)

25. Oil cooler hose
- Tighten oil cooler hose bracket bolts to the specified torque.

Torque N·m (lb·ft)	18 (13)

24. Crankshaft pulley assembly
- Using special tool J-8614-01, hold the crankshaft pulley.
- Tighten center bolt to the specified torque.

Torque N·m (lb·ft)	167 (123)

23. Fan pulley assembly
- Tighten fixing bolt to the specified torque.

Torque N·m (lb·ft)	22 (16)

22. Power steering pump
- Tighten pump fixing bolts to the specified torque.

Torque N·m (lb·ft)	46 (34)

21. Generator drive belt
- Engage and adjust.
- Refer to Section 6B "Drive belt adjustment".

20. Air Conditioning compressor drive belt
- Engage and adjust.
- Refer to Section 6B "Drive belt adjustment".

19. Power steering pump drive belt
- Engage and adjust.
- Refer to Section 6B "Drive belt adjustment".

18. Fuel hoses
- Connect the hoses securely and install the bolts on the head cover.

17. Common chamber
- Tighten bolts and nuts to the specified torque.

Bolts

Torque N·m (lb·ft)	24 (17)

Nuts

Torque N·m (lb·ft)	24 (17)

16. Common chamber duct
- Tighten bolts and nuts to the specified torque.

Bolts

Torque N·m (lb·ft)	24 (17)

Nuts

Torque N·m (lb·ft)	24 (17)

- Connect the ground cable.

15. Exhaust Gas Recirculation Valve assembly
- Tighten bolts to the specified torque.

Exhaust Gas Recirculation Valve Side

Torque N·m (lb·in)	8 (69)

Exhaust Manifold Side

Torque N·m (lb·ft)	28 (21)

14. Evaporative Emission Canister Purge hose

13. Fuel Pressure Control Valve vacuum hose

12. Positive Crankcase Ventilation hose

10. Throttle body
- Tighten bolts to the specified torque.

Torque N·m (lb·ft)	19 (14)

11. Vacuum hoses
- Connect vacuum hoses on canister Vacuum Switching Valve and Exhaust Gas Recirculation Vacuum Switching Valve to the throttle body.

9. Ignition Control Module assembly
- Tighten bolts to the specified torque and connector.

Torque N·m (lb·ft)	19 (14)

8. High tension cables

7. Connectors
- Connect each connector.

6. Vacuum booster hose

5. Canister vacuum hose

4. Accelerator Pedal cable
- Accelerator pedal cable adjustment (Fig. 6A1-41)
  1) Loosen the adjusting nut and screw cap.
  2) Pull outer cable while fully closing the throttle valve.
  3) Tighten adjusting nut and screw cap temporarily.
  4) Loosen adjusting nut by three turns and tighten screw cap.
     Then, manually operating the throttle valve, make sure that the valve lever returns up to the stopper screw. If it does not reach the stopper screw, repeat from step 1).

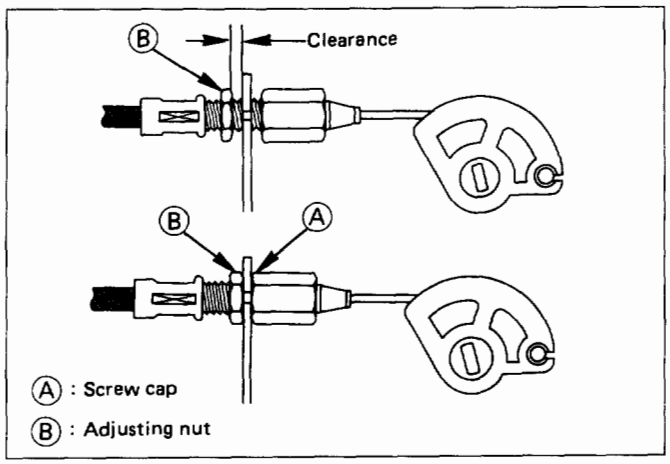

Fig. 6A1-41

3. Cooling fan assembly
- Tighten fixing bolts to the specified torque.

Torque N·m (lb·in)	8 (69)

2. Radiator upper fan shroud

1. Air cleaner assembly

TIMING CHAIN (DOHC)

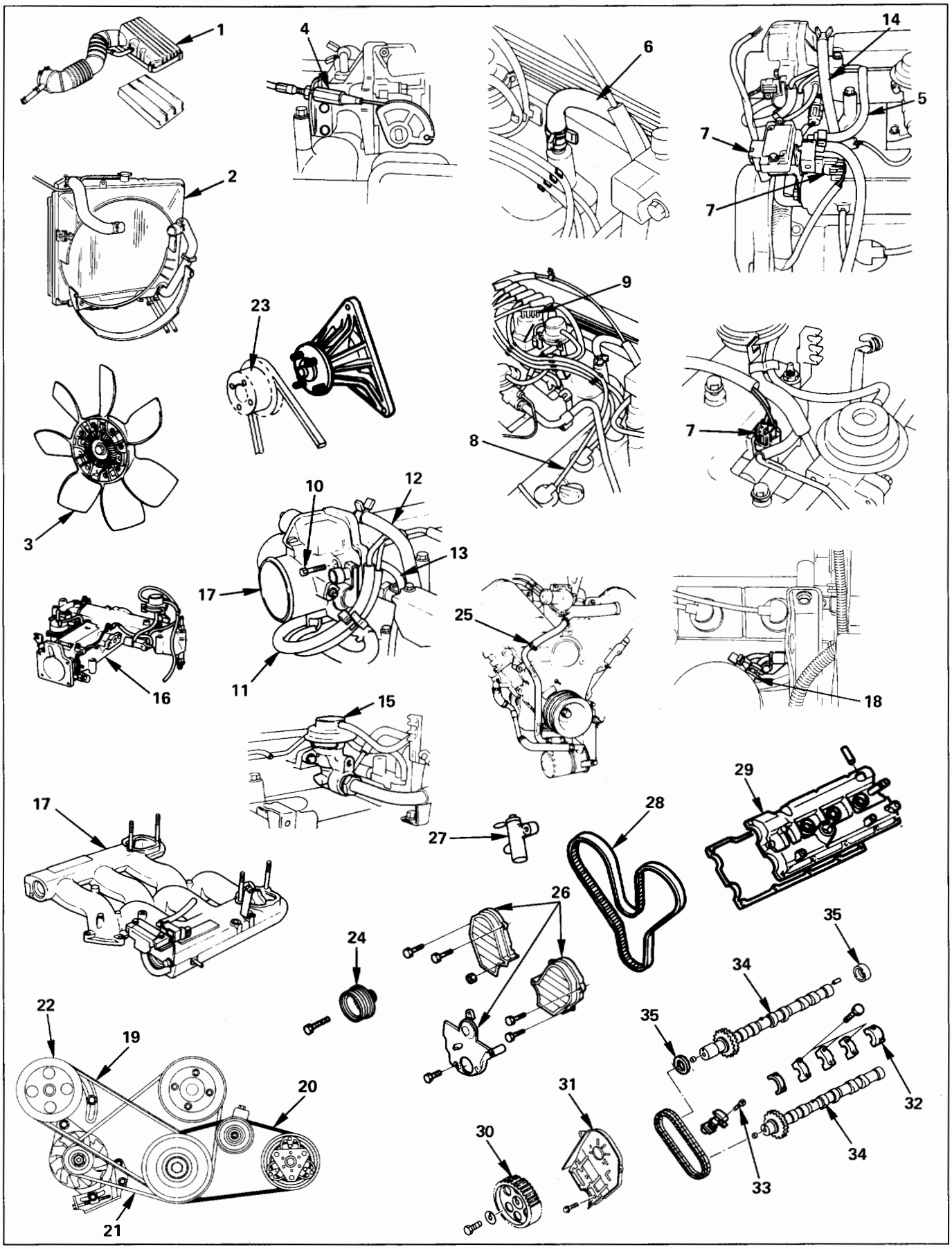

Fig. 6A1-42

REMOVAL

Preparation: Battery ground cable

1. **Air cleaner assembly**
2. **Radiator upper fan shroud**
   - Remove from radiator.
3. **Cooling fan assembly**
   - Remove four nuts, then the cooling fan assembly.
4. **Accelerator Pedal cable**
   - Disconnect from throttle body and cable bracket.
5. **Canister vacuum hose**
   - Disconnect from vacuum pipe.
6. **Vacuum booster hose**
   - Disconnect from common chamber.
7. **Connectors**
   - Disconnect from Manifold Absolute Pressure, canister Vacuum Switching Valve (VSV), Exhaust Gas Recirculation VSV, Intake Air Temperature and ground cable.
8. **High tension cables**
   - Disconnect from cylinder head cover.
9. **Ignition Control Module assembly**
   - Disconnect three Electronic Ignition connectors.
   - Remove three Electronic Ignition bracket fixing bolts, and remove Electronic Ignition assembly with high tension cables.
10. **Throttle body**
    - Remove four fixing bolts.
11. **Vacuum hoses**
    - Disconnect vacuum hoses on canister VSV and Exhaust Gas Recirculation VSV from the throttle body.
12. **Positive Crankcase Ventilation hose**
    - Disconnect from common chamber.
13. **Fuel Pressure Control Valve vacuum hose**
    - Disconnect from common chamber.
14. **Evaporative Emission Canister Purge hose**
    - Disconnect from common chamber.
15. **Exhaust Gas Recirculation Valve assembly**
    - Remove five bolts from common chamber, exhaust manifold and cylinder head cover.
16. **Common chamber duct**
    - Remove four bolts, four nuts and three bracket fixing bolts, then remove the common chamber duct.
    - Disconnect ground cable from rear side of common chamber.
17. **Common chamber**
    - Remove six bolts, two nuts and three bracket fixing bolts, then remove the common chamber.
18. **Fuel hoses**
    - Disconnect feed and return fuel hoses from fuel pipes, and remove two bracket fixing bolts on the cylinder head cover.
19. **Power steering pump drive belt**
20. **Air Conditioning compressor drive belt**
21. **Generator drive belt**
22. **Power steering pump**
23. **Fan pulley assembly**
24. **Crankshaft pulley assembly**
    - Using special tool J-8614-01, hold crankshaft pulley.
    - Remove center bolt, then the pulley.
25. **Oil cooler hose**
    - Remove two cooler hose bracket fixing bolts on the timing belt cover.
26. **Timing belt cover**
27. **Pusher**

CAUTION:
The pusher prevents air from entering the oil chamber. Its rod must always be facing upward.

28. **Timing belt**

CAUTIONS:
1) Do not bend or twist the belt, otherwise its core could be damaged. The belt should not be bent at a radius less than 30mm.
2) Do not allow oil or other chemical substances to come in contact with the belt. They will shorten the belt life.
3) Do not attempt to pry or stretch the belt with a screwdriver or any other tool during installation.
4) Store timing belt in a cool and dark place. Never expose the belt to direct sunlight or heat.

29. **Cylinder head cover**
    - Remove 11 fixing bolts, then the cylinder head cover.
30. **Camshaft timing pulley**
31. **Front plate**
32. **Camshaft brackets**
33. **Chain tensioner fixing bolts**
34. **Camshaft**
    - Remove the camshaft with chain and chain tensioner.
35. **Oil seal and camshaft end plug**

INSTALLATION

34. Camshaft

- Install camshaft with chain and chain tensioner.

NOTE:
Install a retainer on the tensioner as shown in Fig. 6A1-43 to prevent plunger from moving and remove it after securely installing camshaft.

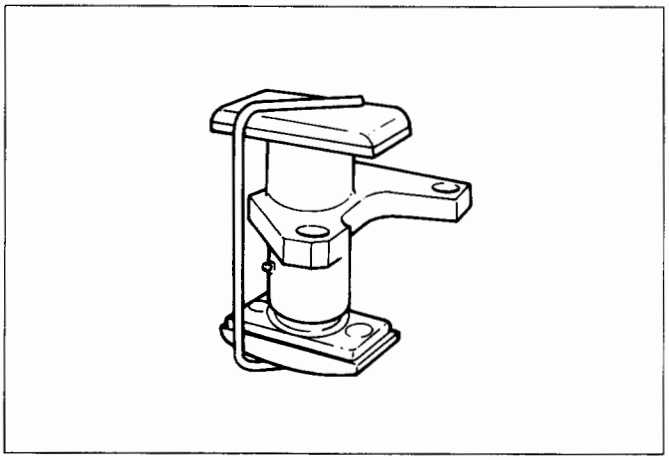

Fig. 6A1-43

1) Apply engine oil sufficiently to the following points.
   1 Camshaft journal
   2 Camshaft sprocket
2) Install camshaft on cylinder head.
   1 Align sprocket timing mark to chain timing mark (Fig. 6A1-44).
   2 Take care not to install wrong chain tensioners, as left and right tensioners are different from each other.
   Each tensioner is marked with either R (right) or L (left) (Fig. 6A1-45).

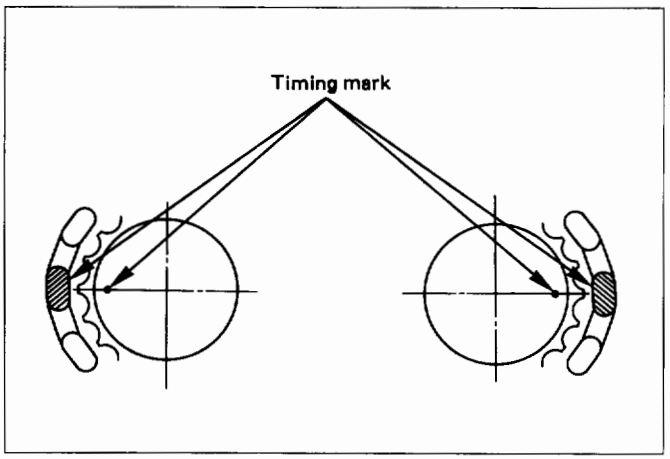

Fig. 6A1-44

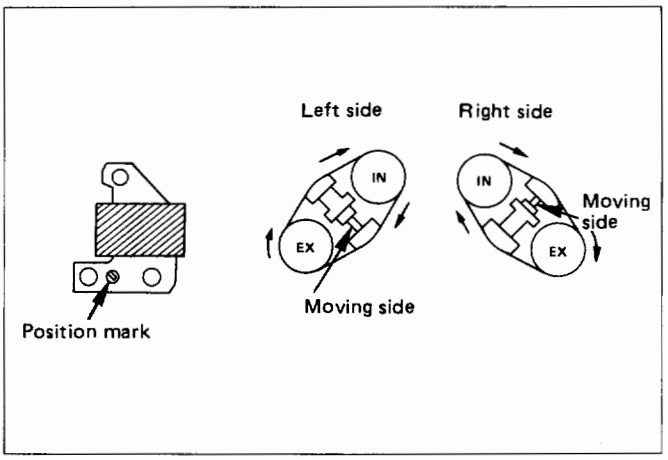

Fig. 6A1-45

33. Chain tensioner fixing bolts

- Tighten the bolts.

Torque N·m (lb·ft)	19 (14)

32. Camshaft brackets

1) Remove any oil from the contact surfaces on the intake and exhaust sides of #1 and #6 camshaft bearing caps on the cylinder head.
2) Apply sealant (TB-1207B or equivalent) to contact surfaces of cylinder head with #1 and #6 camshaft bracket as shown in Fig. 6A1-46.

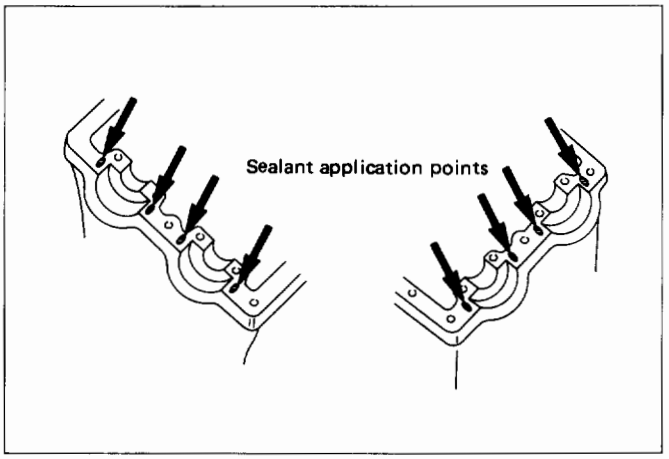

Fig. 6A1-46

CAUTION:
Do not apply an excessive amount of sealant to the contact surface. Applying too much sealant will result in the coating overflowing the contact surface. This could cause the serious damage of the engine.

3) Mount the camshaft bracket on the cylinder head.
4) Tighten camshaft bracket bolts in sequence, as shown in the illustration (Fig. 6A1-47).

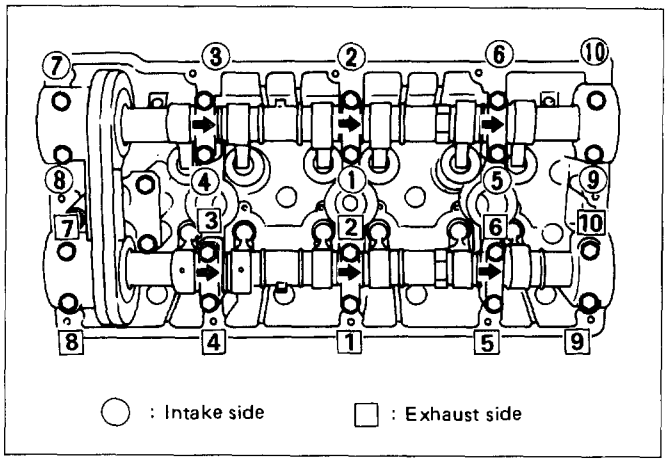

Fig. 6A1-47

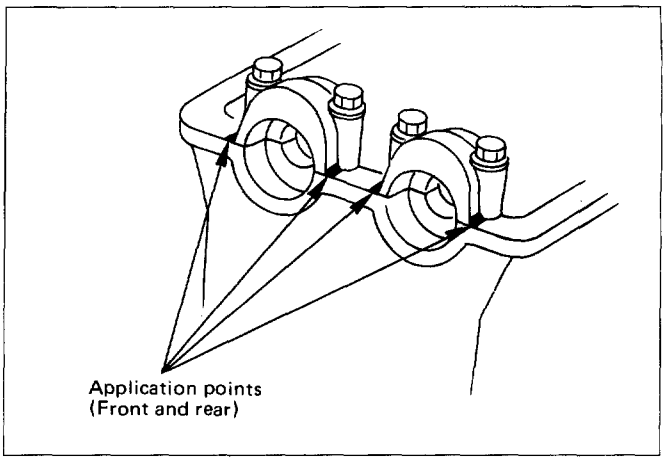

Fig. 6A1-48

- The "E" mark is applied to the camshaft bracket exhaust side and, on the other hand, the "I" mark is applied to the intake side. Install the camshaft bracket in the numerical order (1, 2, 3, 4, 6) from the camshaft end without the sprocket.
- The camshaft bracket arrow marks must be pointing towards the camshaft end without the sprocket.

Torque N·m (lb·in)	10 (87)

35. Oil seal and camshaft end plug
- Apply engine oil to the camshaft oil seal lip and install new camshaft oil seal
- Camshaft oil seal Installer: J-39203

31. Front plate
- Tighten front plate fixing bolts to the specified torque.

Torque N·m (lb·ft)	19 (14)

30. Camshaft timing pulley
- Tighten camshaft pulley fixing bolts to the specified torque

Torque N·m (lb·ft)	63 (46)

29. Cylinder head cover
- Clean the sealing surface of cylinder head and cylinder head cover to remove oil and sealing material completely. Apply sealant (TB-1207B or equivalent) of bead diameter 2-3 mm to four places of arched area of camshaft brackets on front and rear sides. (Fig. 6A1-48)
- Tighten bolts to the specified torque.

Torque N·m (lb·in)	8 (69)

28. Timing belt
- Refer to "Timing belt removal and installation" in this section.

27. Pusher
- Tighten bolt to the specified torque.

Torque N·m (lb·ft)	19 (14)

26. Timing belt cover
- Remove crankshaft pulley that was installed in step 30.
- Tighten bolts to the specified torque.

Torque N·m (lb·ft)	18 (13)

25. Oil cooler hose
- Tighten oil cooler hose bracket bolts to the specified torque.

Torque N·m (lb·ft)	18 (13)

24. Crankshaft pulley assembly
- Using special tool J-8614-01, hold the crankshaft pulley.
- Tighten center bolt to the specified torque.

Torque N·m (lb·ft)	167 (123)

23. Fan pulley assembly
- Tighten fixing bolt to the specified torque.

Torque N·m (lb·ft)	22 (16)

22. Power steering pump
- Tighten pump fixing bolts to the specified torque.

Torque N·m (lb·ft)	46 (34)

21. Generator drive belt
- Engage and adjust.
- Refer to Section 6B "Drive belt adjustment".

20. Air Conditioning compressor drive belt
- Engage and adjust.
- Refer to Section 6B "Drive belt adjustment".

19. Power steering pump drive belt
- Engage and adjust.
- Refer to Section 6B "Drive belt adjustment".

18. Fuel hoses
- Connect the hoses securely and install the bolts on the head cover.

17. Common chamber
- Tighten bolts and nuts to the specified torque.

Bolts

Torque N·m (lb·ft)	24 (17)

Nuts

Torque N·m (lb·ft)	24 (17)

16. Common chamber duct
- Tighten bolts and nuts to the specified torque.

Bolts

Torque N·m (lb·ft)	24 (17)

Nuts

Torque N·m (lb·ft)	24 (17)

- Connect the ground cable.

15. Exhaust Gas Recirculation Valve assembly
- Tighten bolts to the specified torque.

Exhaust Gas Recirculation Valve side

Torque N·m (lb·in)	8 (69)

Exhaust manifold side

Torque N·m (lb·ft)	28 (21)

14. Evaporative Emission Canister Purge hose

13. Fuel Pressure Control Valve vacuum hose

12. Positive Crankcase Ventilation hose

10. Throttle body
- Tighten bolts to the specified torque.

Torque N·m (lb·ft)	19 (14)

11. Vacuum hoses
- Connect vacuum hoses on canister Vacuum Switching Valve and Exhaust Gas Recirculation Vacuum Switching Valve to the throttle body.

9. Ignition Control Module assembly
- Tighten bolts to the specified torque and connect connector.

Torque N·m (lb·ft)	19 (14)

8. High tension cables

7. Connectors
- Connect each connector carefully.

6. Vacuum booster hose

5. Canister vacuum hose

4. Accelerator Pedal cable
- Accelerator pedal cable adjustment (Fig. 6A1-49)
  1) Loosen adjusting nut and screw cap.

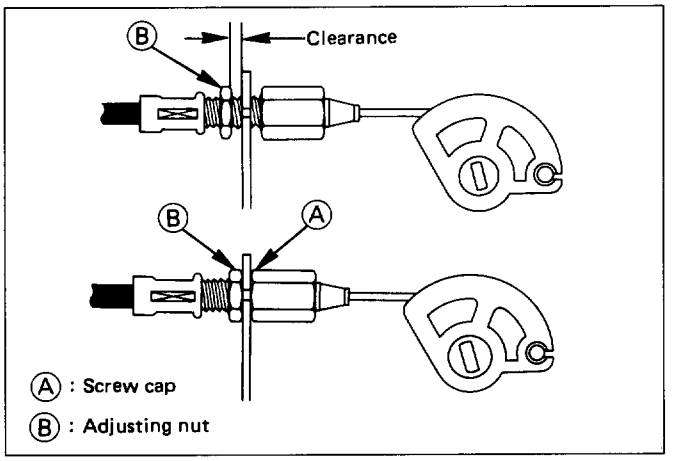

Fig. 6A1-49

  2) Pull outer cable while closing fully the throttle body.
  3) Tighten adjusting nut and screw cap temporarily.
  4) Loosen adjusting nut by three turns and tighten screw cap.
     Then, manually operating the throttle body, make sure that the valve lever returns up to the stopper screw. If it does not reach the stopper screw, repeat from step 1).

3. Cooling fan assembly
- Tighten fixing bolts to the specified torque.

Torque N·m (lb·in)	8 (69)

2. Radiator upper fan shroud

1. Air cleaner assembly

VALVE STEM OIL CONTROLLER AND VALVE SPRING

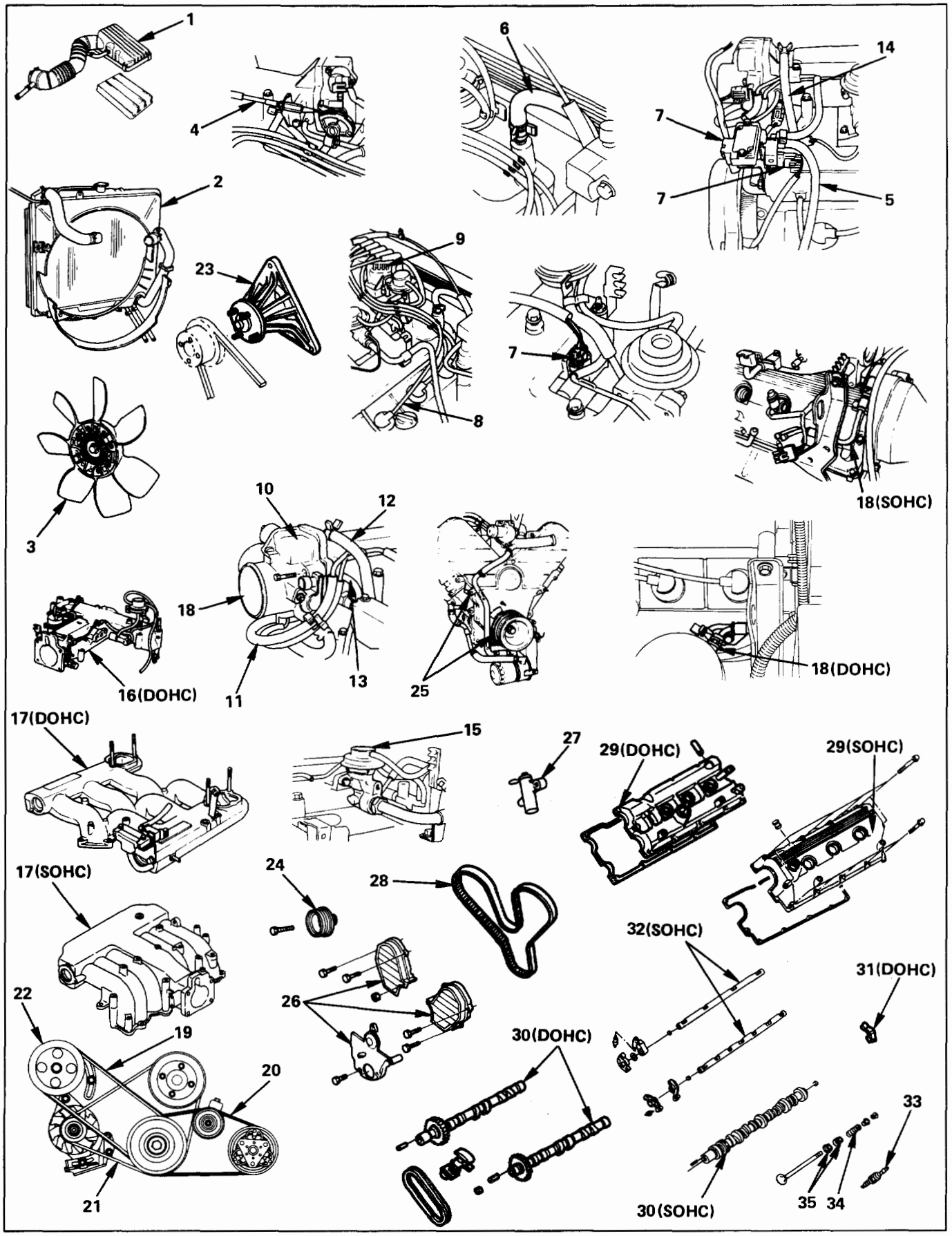

Fig. 6A1-50

REMOVAL

Preparation: Battery ground cable

1. **Air cleaner assembly**
2. **Radiator upper fan shroud**
   - Remove from radiator.
3. **Cooling fan assembly**
   - Remove four nuts, then the cooling fan assembly.
4. **Accelerator Padal cable**
   - Disconnect from throttle body and cable bracket.
5. **Canister vacuum hose**
   - Disconnect from vacuum pipe.
6. **Vacuum booster hose**
   - Disconnect from common chamber.
7. **Connectors**
   - Disconnect from Manifold Absolute Pressure, canister Vacuum Switching Valve (VSV), Exhaust Gas Recirculation VSV, Intake Air Temperature and ground cable.
8. **High tension cables**
   - Disconnect from cylinder head cover.
9. **Ignition Control Module assembly**
   - Disconnect three Electronic Ignition connectors.
   - Remove three Electronic Ignition bracket fixing bolts, and remove Electronic Ignition assembly with high tension cables.
10. **Throttle body**
    - Remove four fixing bolts.
11. **Vacuum hoses**
    - Disconnect vacuum hoses on canister VSV and Exhaust Gas Recirculation VSV from the throttle body.
12. **Positive Crankcase Ventilation hose**
    - Disconnect from common chamber.
13. **Fuel Pressure Control Valve vacuum hose**
    - Disconnect from common chamber.
14. **Evaporative Emission Canister Purge hose**
    - Disconnect from common chamber.
15. **Exhaust Gas Recirculation Valve assembly**
    - Remove five bolts from common chamber, exhaust manifold and cylinder head cover.
16. **Common chamber duct (DOHC)**
    - Remove four bolts, four nuts and three bracket fixing bolts, then remove the common chamber duct.
    - Disconnect ground cable from rear side of common chamber.
17. **Common chamber**
    - Remove six bolts, two nuts and three bracket fixing bolts, then remove the common chamber.
18. **Fuel hoses**
    - Disconnect feed and return fuel hoses from fuel pipes, and remove two bracket fixing bolts on the cylinder head cover.
19. **Power steering pump drive belt**
20. **Air Conditioning compressor drive belt**
21. **Generator drive belt**
22. **Power steering pump**
23. **Fan pulley assembly**
24. **Crankshaft pulley assembly**
    - Using special tool J-8614-01, hold crankshaft pulley.
    - Remove center bolt, then the pulley.
25. **Oil cooler hose**
    - Remove two cooler hose bracket fixing bolts on the timing belt cover.
26. **Timing belt cover**
27. **Pusher**

    CAUTION:
    The pusher prevents air from entering the oil chamber. Its rod must always be facing upward.
28. **Timing belt**

    CAUTIONS:
    1) Do not bend or twist the belt, otherwise its core could be damaged. The belt should not be bent at a radius less than 30mm.
    2) Do not allow oil or other chemical substances to come in contact with the belt. They will shorten the belt life.
    3) Do not attempt to pry or stretch the belt with a screwdriver or any other tool during installation.
    4) Store timing belt in a cool and dark place. Never expose the belt to direct sunlight or heat.
29. **Cylinder head cover**
30. **Camshaft**
    - Camshaft pulley fixing bolt and camshaft pulley
    - Front plate fixing bolts and front plate
    - Chain tensioner fixing bolts (DOHC) and camshaft bracket fixing bolts
    - Camshaft, oil seal and camshaft end plug
31. **Swing arm (DOHC)**
32. **Rocker arm (SOHC)**
    - Fixing bolt and rocker arm
33. **Spark plugs**
    - Keep valve in home position by feeding the compressed air to the cylinder from spark plug hole.

34. Valve springs
- Refer to section 6A "Valve springs oil controller, valve, valve guide (and HLA for DOHC)" removal.

35. Valve stem oil controllers
- Using special tool, remove each valve stem oil controller.
  Remover: J-37281

INSTALLATION

35. Valve stem oil controllers
- Refer to Section 6A "Valve springs, oil controller, valve, valve guide (and HLA for DOHC)" installation.

34. Valve springs
- Using special tool, install each valve spring.
  Spring compressor: J-39251

33. Spark plugs
- Tighten each spark plug to the specified torque.

Torque N·m (lb·ft)	18 (13)

32. Rocker arm (SOHC)
- Tighten bolt to the specified torque.

Torque N·m (lb·ft)	18 (13)

31. Swing arm (DOHC)

30. Camshaft
- Refer to Section 6A "Camshaft installation".

29. Cylinder head cover
- Tighten bolts to the specified torque.

Torque N·m (lb·in)	8 (69)

28. Timing belt
- Refer to "Timing belt removal and installation" in this section.

27. Pusher
- Tighten bolt to the specified torque.

Torque N·m (lb·ft)	19 (14)

26. Timing belt cover
- Remove crankshaft pulley that was installed in step 30.
- Tighten bolts to the specified torque.

Torque N·m (lb·ft)	18 (13)

25. Oil cooler hose
- Tighten oil cooler hose bracket bolts to the specified torque.

Torque N·m (lb·ft)	18 (13)

24. Crankshaft pulley assembly
- Using special tool J-8614-01, hold the crankshaft pulley.
- Tighten center bolt to the specified torque.

Torque N·m (lb·ft)	167 (123)

23. Fan pulley assembly
- Tighten fixing bolt to the specified torque.

Torque N·m (lb·ft)	22 (16)

22. Power steering pump
- Tighten pump fixing bolts to the specified torque.

Torque N·m (lb·ft)	56 (41)

21. Generator drive belt
- Engage and adjust.
- Refer to Section 6B "Drive belt adjustment".

20. Air Conditioning compressor drive belt
- Engage and adjust.
- Refer to Section 6B "Drive belt adjustment".

19. Power steering pump drive belt
- Engage and adjust.
- Refer to Section 6B "Drive belt adjustment".

18. Fuel hoses
- Connect surely the hoses and install the bolts on the head cover.

17. Common chamber
- Tighten bolts and nuts to the specified torque.

Bolts

Torque N·m (lb·ft)	24 (17)

Nuts

Torque N·m (lb·ft)	24 (17)

16. Common chamber duct (DOHC)
- Tighten bolts and nuts to the specified torque.

Bolts

Torque N·m (lb·ft)	24 (17)

Nuts

Torque N·m (lb·ft)	24 (17)

15. Exhaust Gas Recirculation Valve assembly
- Tighten bolts to the specified torque.

Exhaust gas recirculation valve side

Torque N·m (lb·in)	8 (69)

Exhaust manifold side

Torque N·m (lb·ft)	28 (21)

14. Evaporative Emission Canister Purge hose

13. Fuel Pressure Control Valve vacuum hose

12. Positive Crankcase Ventilation hose

10. Throttle body
- Tighten bolts to the specified torque.

Torque N·m (lb·ft)	19 (14)

11. **Vacuum hoses**
    - Connect vacuum hoses on canister Vacuum Switching Valve and Exhaust Gas Recirculation Vacuum Switching Valve to the throttle body.
9. **Ignition Control Module assembly**
    - Tighten bolts to the specified torque and connect connector.

Torque N·m (lb·ft)	19 (14)

8. **High tension cables**
7. **Connectors**
    - Connect each connector.
6. **Vacuum booster hose**
5. **Canister vacuum hose**
4. **Accelerator Pedal cable**
    - Accelerator pedal cable adjustment (Fig. 6A1-51)
        1) Loosen adjusting nut and screw cap.
        2) Pull outer cable while closing fully the throttle valve.
        3) Tighten adjusting nut and screw cap temporarily.
        4) Loosen adjusting nut by three turns and tighten screw cap.
        Then, manually operating the throttle valve, make sure that the valve lever returns up to the stopper screw. If it does not reach the stopper screw, repeat from step 1).

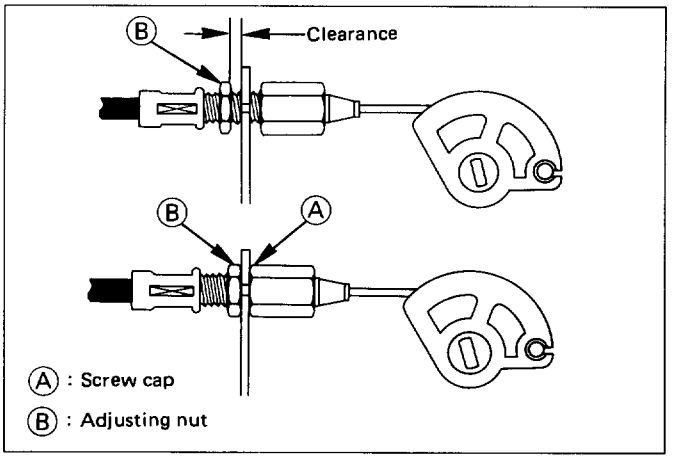

Fig. 6A1-51

3. **Cooling fan assembly**
    - Tighten fixing bolts to the specified torque.

Torque N·m (lb·in)	8 (69)

2. **Radiator upper fan shroud**
1. **Air cleaner assembly**

CYLINDER HEAD (SOHC)

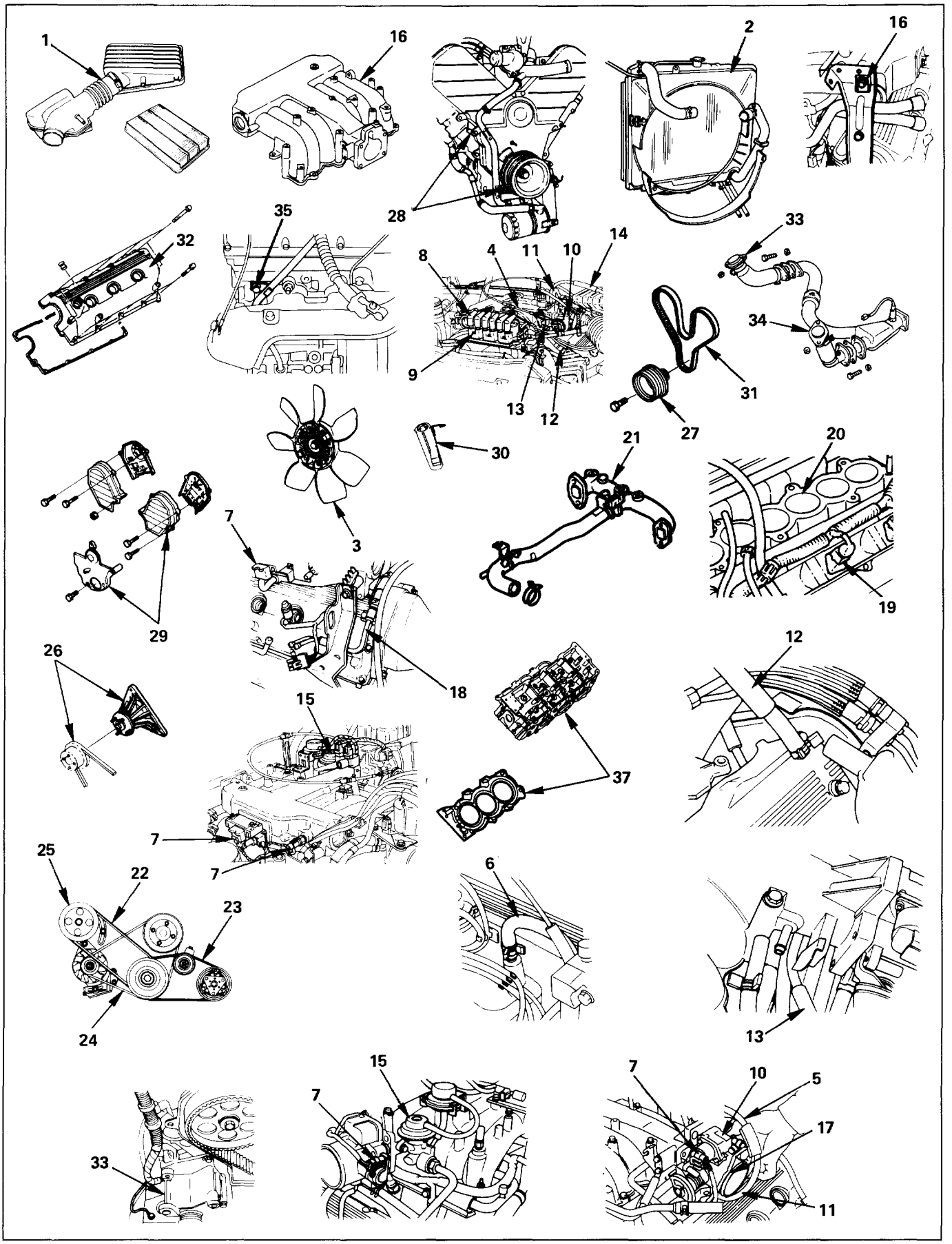

Fig. 6A1-52

REMOVAL

Preparation:
- Remove engine hood.
- Drain radiator Engine Coolant.
- Disconnect battery ground cable.

1. **Air cleaner assembly**
2. **Radiator upper fan shroud**
   - Remove from radiator.
3. **Radiator fan assembly**
   - Remove four nuts, then the radiator fan assembly.
4. **Accelerator Pedal cable**
   - Disconnect from throttle body and cable bracket.
5. **Canister vacuum hose**
6. **Vacuum booster hose**
   - Disconnect from common chamber.
7. **Connectors**
   - Disconnect from Manifold Absolute Pressure, canister Vacuum Switching Valve (VSV), Exhaust Gas Recirculation VSV, Intake Air Temperature and ground cable.
8. **High tension cables**
   - Disconnect from cylinder head cover.
9. **Ignition Control Module assembly**
   - Disconnect three Electronic Ignition connectors.
   - Remove three Electronic Ignition bracket fixing bolts, and remove Electronic Ignition assembly with high tension cables.
10. **Throttle body**
    - Remove four fixing bolts.
11. **Vacuum hoses**
    - Disconnect vacuum hoses on canister VSV and Exhaust Gas Recirculation VSV from the throttle body.
12. **Positive Crankcase Ventilation hose**
    - Disconnect from common chamber.
13. **Fuel Pressure Control Valve vacuum hose**
    - Disconnect from common chamber.
14. **Evaporative Emission Canister Purge hose**
    - Disconnect from common chamber.
15. **Exhaust Gas Recirculation assembly**
16. **Common chamber**
    - Remove six bolts, two nuts and four bracket fixing bolts, then remove the common chamber.
17. **Throttle body**
    - Disconnect Engine Coolant hose from throttle body.
    - Disconnect Idler Air Control Valve and Throttle Position Sensor connectors.
18. **Fuel hoses**
    - Disconnect feed and return fuel hoses from fuel pipes, and remove two bracket fixing bolts on the cylinder head cover.
19. **Fuel injector connectors**
    - Disconnect connectors from injectors.
    - Disconnect thermo sensor connector.
20. **Intake manifold**
    - Remove two fixing bolts and four nuts.
21. **Engine Coolant manifold**
    - Disconnect heater hose.
    - Remove four fixing bolts.
22. **Power steering pump drive belt**
23. **Air Conditioning compressor drive belt**
24. **Generator drive belt**
25. **Power steering pump**
26. **Fan pulley assembly**
27. **Crankshaft pulley assembly**
    - Using special tool J-8614-01, hold crankshaft pulley.
    - Remove center bolt, then the pulley.
28. **Oil cooler hose**
    - Remove two cooler hose bracket fixing bolts on the timing belt cover.
29. **Timing belt cover**
30. **Pusher**

CAUTION:
The pusher prevents air from entering the oil chamber. Its rod must always be facing upward.

31. **Timing belt**

CAUTIONS:
1) Do not bend or twist the belt, otherwise its core could be damaged. The belt should not be bent at a radius less than 30mm.
2) Do not allow oil or other chemical substances to come in contact with the belt. They will shorten the belt life.
3) Do not attempt to pry or stretch the belt with a screwdriver or any other tool during installation.
4) Store timing belt in a cool and dark place. Never expose the belt to direct sunlight or heat.

32. **Cylinder head cover**
    - Remove 11 fixing bolts, then the cylinder head cover.
33. **Power steering pump bracket**
    - Disconnect ground cable from bracket.
    - Remove five fixing bolts, then the bracket.
34. **Exhaust front pipe**
35. **Level gage guide tube fixing bolt**
    - Remove from cylinder head.
36. **Cylinder head**

INSTALLATION

36. Cylinder head

- Using special tools, tighten fixing bolts to the specified torque, in sequence shown in Fig. 6A1-53.
  Extension wrench: J-39252
  Extension wrench: J-24239-01

NOTE:

- Do not reuse cylinder head gasket and M11 fixing bolts.
- Do not apply the oil to the bolt.

M8x1.25

Torque N·m (lb·ft)	21 (15)

M11x1.5

Torque N·m (lb·ft)	64 (47)

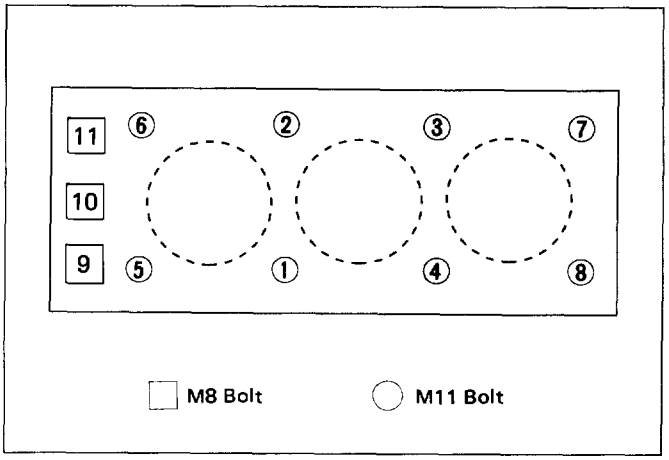

Fig. 6A1-53

35. Level gage guide tube fixing bolt

34. Exhaust front pipe

- Tighten fixing bolt to the specified torque.

Torque N·m (lb·ft)	67 (48)

33. Power steering pump bracket

- Tighten fixing bolts to the specified torque.

Torque N·m (lb·ft)	46 (34)

32. Cylinder head cover

- Refer to "Cylinder head cover removal and installation" in this section.

31. Timing belt

- Refer to "Timing belt removal and installation" in this section.

30. Pusher

- Tighten bolt to the specified torque.

Torque N·m (lb·ft)	19 (14)

29. Timing belt cover

- Remove crankshaft pulley that was installed in step 33.
- Tighten bolts to the specified torque.

Torque N·m (lb·ft)	18 (13)

28. Oil cooler hose

- Tighten oil cooler hose bracket bolts to the specified torque.

Torque N·m (lb·ft)	18 (13)

27. Crankshaft pulley assembly

- Using special tool J-8614-01, hold the crankshaft pulley.
- Tighten center bolt to the specified torque.

Torque N·m (lb·ft)	167 (123)

26. Fan pulley assembly

- Tighten fixing bolt to the specified torque.

Torque N·m (lb·ft)	22 (16)

25. Power steering pump

- Tighten pump fixing bolts to the specified torque.

Torque N·m (lb·ft)	46 (34)

24. Generator drive belt

- Engage and adjust.
- Refer to Section 6B "Drive belt adjustment".

23. Air Conditioning compressor drive belt

- Engage and adjust.
- Refer to Section 6B "Drive belt adjustment".

22. Power steering pump drive belt

- Engage and adjust.
- Refer to Section 6B "Drive belt adjustment".

21. Engine Coolant manifold

- Tighten fixing bolts to the specified torque.

Torque N·m (lb·ft)	22 (16)

- Connect heater hose.

20. Intake manifold

- Tighten fixing bolts and nuts to the specified torque.

Bolts

Torque N·m (lb·ft)	24 (17)

Nuts

Torque N·m (lb·ft)	24 (17)

19. Fuel injector connectors

- Connect to each injector.

18. Fuel hoses

- Connect the hoses securely and install the bolts on the head cover.

17. Throttle body

16. Common chamber

- Tighten bolts and nuts to the specified torque.

Bolts

Torque N·m (lb·ft)	24 (17)

Nuts

Torque N·m (lb·ft)	24 (17)

15. Exhaust Gas Recirculation Valve assembly

- Tighten bolts to the specified torque.

Exhaust Gas Recirculation Valve Side

Torque N·m (lb·in)	8 (69)

Exhaust Manifold Side

Torque N·m (lb·ft)	28 (21)

14. Evaporative Emission Canister Purge hose

13. Fuel Pressure Control Valve vacuum hose

12. Positive Crankcase Ventilation hose

11. Throttle body

- Tighten bolts to the specified torque.

Torque N·m (lb·ft)	19 (14)

10. Vacuum hoses

- Connect vacuum hoses on canister Vacuum Switching Valve and Exhaust Gas Recirculation Vacuum Switching Valve to the throttle body.
- Connect Engine Coolant hose and also connect Idler Air Control Valve and Throttle Position Sensor connectors.

9. Ignition Control Module assembly

- Tighten bolts to the specified torque and connect connector.

Torque N·m (lb·ft)	19 (14)

8. High tension cables

7. Connectors

- Connect each connector without fail.

6. Vacuum booster hose

5. Canister vacuum hose

4. Accelerator Pedal cable

- Accelerator pedal cable adjustment (Fig. 6A1-54)
  1) Loosen the adjusting nut and screw cap.
  2) Pull outer cable while fully closing the throttle valve.
  3) Tighten adjusting nut and screw cap temporarily.
  4) Loosen adjusting nut by three turns and tighten screw cap.
     Then, manually operating the throttle valve, make sure that the valve lever returns up to the stopper screw. If it does not reach the stopper screw, repeat from step 1).

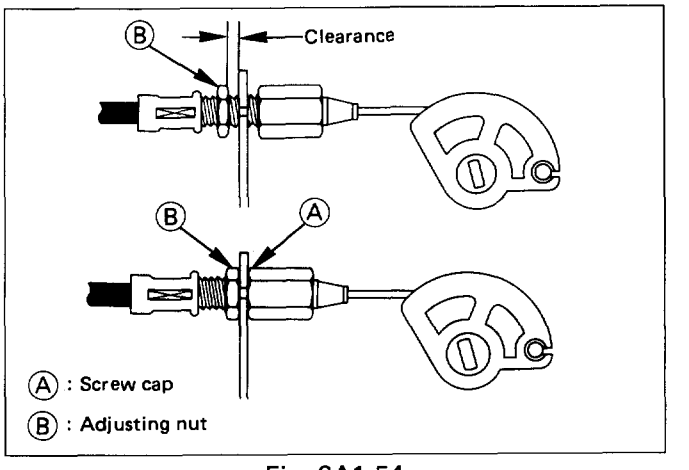

Fig. 6A1-54

3. Cooling fan assembly

- Tighten fixing bolts to the specified torque.

Torque N·m (lb·in)	8 (69)

2. Radiator upper fan shroud

1. Air cleaner assembly

NOTE:

- After installation refill the engine coolant. Refer to Section 6B "Engine cooling".

CYLINDER HEAD (DOHC)

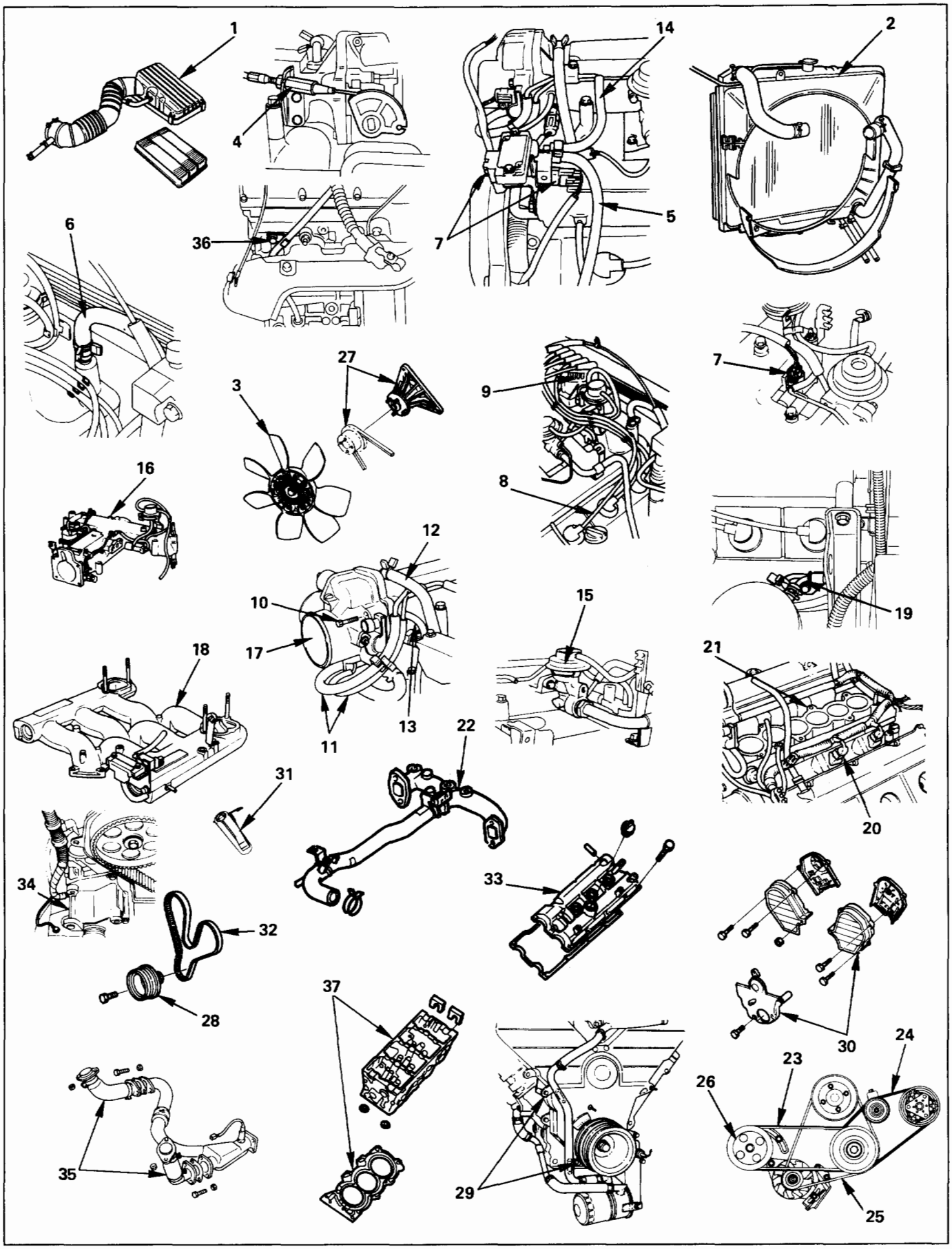

Fig. 6A1-55

REMOVAL

Preparation:
- Remove engine hood.
- Drain radiator Engine Coolant.
- Disconnect battery ground cable.

1. **Air cleaner assembly**
2. **Radiator upper fan shroud**
   - Remove from radiator.
3. **Radiator fan assembly**
   - Remove four nuts, then the radiator fan assembly.
4. **Accelerator Pedal cable**
   - Disconnect from throttle body and cable bracket.
5. **Canister vacuum hose**
   - Disconnect from vacuum pipe.
6. **Vacuum booster hose**
   - Disconnect from common chamber.
7. **Connectors**
   - Disconnect from Manifold Absolute Pressure, canister Vacuum Switching Valve (VSV), Exhaust Gas Recirculation VSV, Intake Air Temperature and ground cable.
8. **High tension cables**
   - Disconnect from cylinder head cover.
9. **Ignition Control Module assembly**
   - Disconnect three Electronic Ignition connectors.
   - Remove three Electronic Ignition bracket fixing bolts, and remove Electronic Ignition assembly with high tension cables.
10. **Throttle body**
    - Remove four fixing bolts.
11. **Vacuum hoses**
    - Disconnect vacuum hoses on canister VSV and Exhaust Gas Recirculation VSV from the throttle body.
12. **Positive Crankcase Ventilation hose**
    - Disconnect from common chamber.
13. **Fuel Pressure Control Valve vacuum hose**
    - Disconnect from common chamber.
14. **Canister vacuum hose**
    - Disconnect from common chamber.
15. **Exhaust Gas Recirculation Valve assembly**
    - Remove five bolts from common chamber, exhaust manifold and cylinder head cover.
16. **Common chamber duct**
    - Remove four bolts, four nuts and three bracket fixing bolts, then remove the common chamber.
    - Disconnect ground cable from rear side of common chamber.
17. **Throttle body**
    - Disconnect Engine Coolant hose from throttle body.
    - Disconnect Idle Air Control Valve and Throttle Position Sensor connectors.
18. **Common chamber**
    - Remove six bolts and two nuts.
    - Remove fixing bolts on common chamber bracket, then the common chamber.
19. **Fuel hoses**
    - Disconnect feed and return fuel hoses from fuel pipes, and remove two bracket fixing bolts on the cylinder head cover.
20. **Fuel injector connectors**
    - Disconnect connectors from injectors.
    - Disconnect thermo sensor connector.
21. **Intake manifold**
    - Remove two fixing bolts and four nuts.
22. **Engine Coolant manifold**
    - Disconnect heater hose.
    - Remove four fixing bolts.
23. **Power steering pump drive belt**
24. **Air Conditioning compressor drive belt**
25. **Generator drive belt**
26. **Power steering pump**
27. **Fan pulley assembly**
28. **Crankshaft pulley assembly**
    - Using special tool J-8614-01, hold crankshaft pulley.
    - Remove center bolt, then the pulley.
29. **Oil cooler hose**
    - Remove two cooler hose bracket fixing bolts on the timing belt cover.
30. **Timing belt cover**
31. **Pusher**

    CAUTION:
    The pusher prevents air from entering the oil chamber. Its rod must always be facing upward.
32. **Timing belt**

    CAUTIONS:
    1) Do not bend or twist the belt, otherwise its core could be damaged. The belt should not be bent at a radius less than 30mm.
    2) Do not allow oil or other chemical substances to come in contact with the belt. They will shorten the belt life.
    3) Do not attempt to pry or stretch the belt with a screwdriver or any other tool during installation.
    4) Store timing belt in a cool and dark place. Never expose the belt to direct sunlight or heat.

33. Cylinder head cover
- Remove 11 fixing bolts, then the cylinder head cover.

34. Power steering pump bracket
- Disconnect ground cable from bracket.
- Remove five fixing bolts, then the bracket.

35. Exhaust front pipe

36. Level gage fixing bolt
- Remove from cylinder head.

37. Cylinder head

INSTALLATION

37. Cylinder head
- Using special tools, tighten fixing bolts to the specified torque, in sequence shown in Fig. 6A1-56.

Extension wrench: J-39252
Extension wrench: J-24239-01

NOTE:
- Do not reuse cylinder head gasket and M11 fixing bolts.
- Do not apply the oil to the bolt.

M8x1.25

Torque N·m (lb·ft)	21 (15)

M11x1.5

Torque N·m (lb·ft)	64 (47)

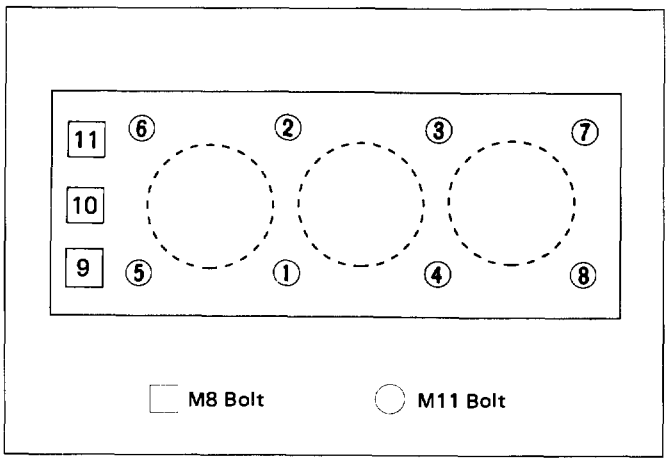

Fig. 6A1-56

36. Level gage guide tube fixing bolt

35. Exhaust front pipe
- Tighten fixing bolt to the specified torque.

Torque N·m (lb·ft)	67 (49)

34. Power steering pump bracket
- Tighten fixing bolts to the specified torque.

Torque N·m (lb·ft)	46 (34)

33. Cylinder head cover
- Refer to "Cylinder head cover removal and installation" in this section

32. Timing belt
- Refer to "Timing belt removal and installation" in this section.

31. Pusher
- Tighten bolt to the specified torque.

Torque N·m (lb·ft)	19 (14)

30. Timing belt cover
- Remove crankshaft pulley that was installed in step 34.
- Tighten bolts to the specified torque.

Torque N·m (lb·ft)	18 (13)

29. Oil cooler hose
- Tighten oil cooler hose bracket bolts to the specified torque.

Torque N·m (lb·ft)	18 (13)

28. Crankshaft pulley assembly
- Using special tool J-8614-01, hold the crankshaft pulley.
- Tighten center bolt to the specified torque.

Torque N·m (lb·ft)	167 (123)

27. Fan pulley assembly
- Tighten fixing bolts to the specified torque.

Torque N·m (lb·ft)	22 (16)

26. Power steering pump
- Tighten pump fixing bolts to the specified torque.

Torque N·m (lb·ft)	46 (34)

25. Generator drive belt
- Refer to Section 6B "Drive belt adjustment".

24. Air Conditioning compressor drive belt
- Refer to Section 6B "Drive belt adjustment".

23. Power steering pump drive belt
- Refer to Section 6B "Drive belt adjustment".

22. Engine Coolant manifold
- Tighten fixing bolts to the specified torque.

Torque N·m (lb·ft)	22 (16)

- Connect heater hose.

21. Intake manifold
- Tighten fixing bolts and nuts to the specified torque.

Bolts

Torque N·m (lb·ft)	24 (17)

Nuts

Torque N·m (lb·ft)	24 (17)

20. Fuel injector connectors
- Connect to each injector.

19. Fuel hoses
- Connect the hoses securely and install the bolts on the head cover.

18. Common chamber
- Tighten bolts and nuts to the specified torque.

Bolts

Torque N·m (lb·ft)	24 (17)

Nuts

Torque N·m (lb·ft)	24 (17)

17. Throttle body
- Connect the engine coolant hose.

16. Common chamber duct
- Tighten bolts and nuts to the specified torque.

Bolts

Torque N·m (lb·ft)	24 (17)

Nuts

Torque N·m (lb·ft)	24 (17)

- Connect the ground cable.

15. Exhaust Gas Recirculation Valve assembly
- Tighten bolts to the specified torque.

Exhaust Gas Recirculation Valve Side

Torque N·m (lb·in)	8 (69)

Exhaust Manifold Side

Torque N·m (lb·ft)	28 (21)

14. Canister vacuum hose

13. Fuel Pressure Control Valve vacuum hose

12. Positive Crankcase Ventilation hose

10. Throttle body
- Tighten bolts to the specified torque.

Torque N·m (lb·ft)	19 (14)

11. Vacuum hoses
- Connect vacuum hoses on canister Vacuum Switching Valve and Exhaust Gas Recirculation Vacuum Switching Valve to the throttle body.

9. Ignition Control Module assembly
- Tighten bolts to the specified torque and connect connector.

Torque N·m (lb·ft)	19 (14)

8. High tension cables

7. Connectors
- Connect each connector without fail.

6. Vacuum booster hose

5. Canister vacuum hose

4. Accelerator Pedal cable
- Accelerator pedal cable adjustment (Fig. 6A1-57)
  1) Loosen adjusting nut and screw cap.
  2) Pull outer cable while closing fully the throttle valve.
  3) Tighten adjusting nut and screw cap temporarily.
  4) Loosen adjusting nut by three turns and tighten screw cap.
     Then, manually operating the throttle valve, make sure that the valve lever returns up to the stopper screw. If it does not reach the stopper screw, repeat from step 1).

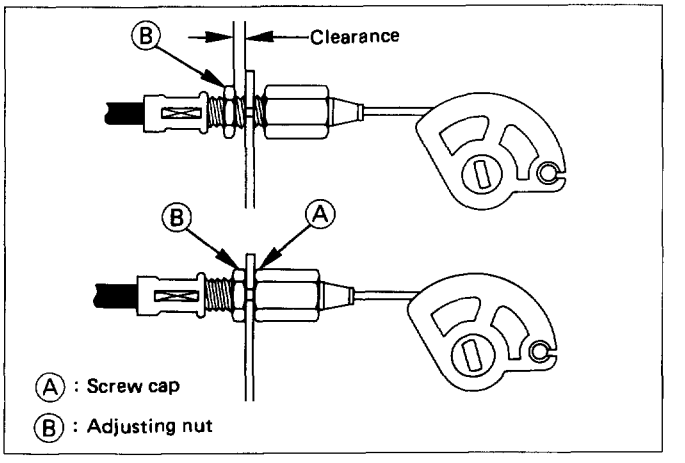

Fig. 6A1-57

3. Radiator fan assembly
- Tighten fixing nut to the specified torque.

Torque N·m (lb·in)	8 (69)

2. Radiator upper fan shroud

1. Air cleaner assembly

NOTE:
- After installation refill the engine coolant. Refer to Section 6B "Engine cooling".

OIL PAN

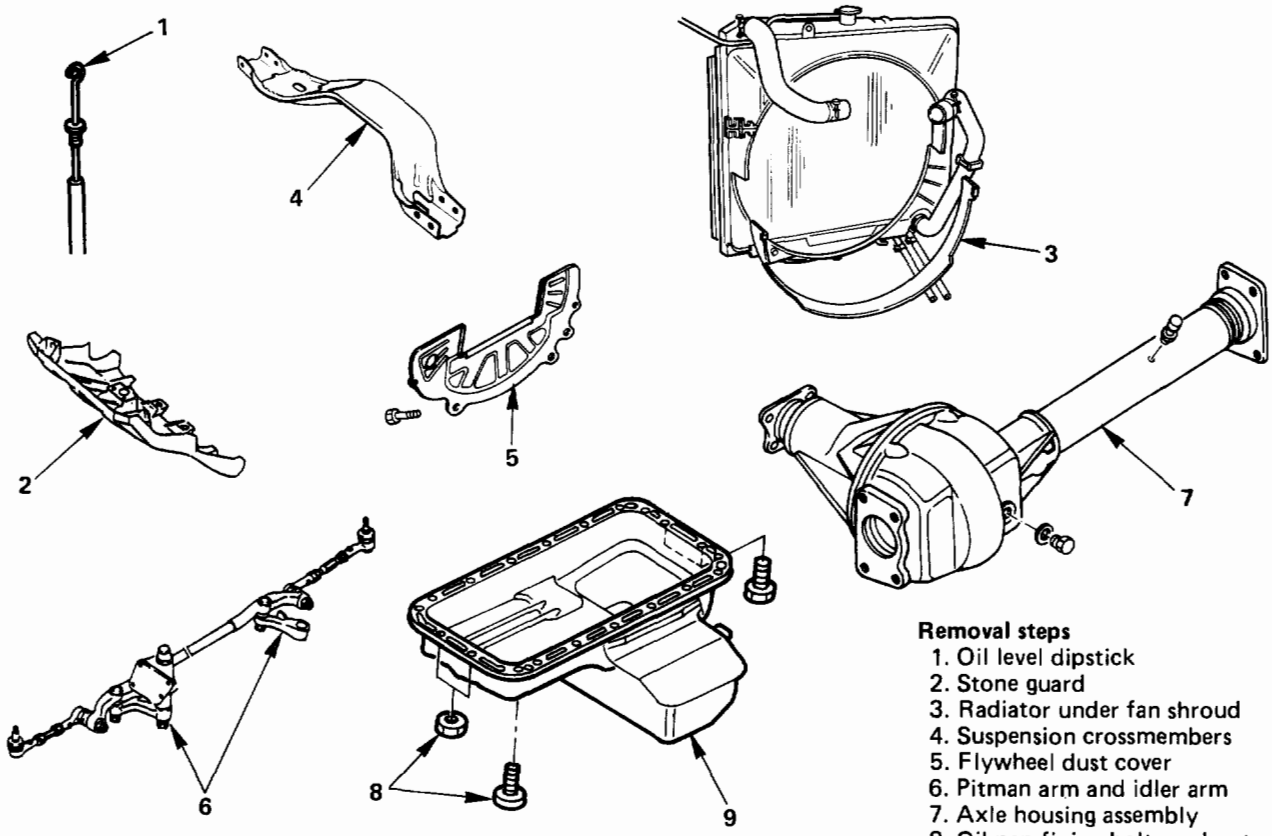

Removal steps
1. Oil level dipstick
2. Stone guard
3. Radiator under fan shroud
4. Suspension crossmembers
5. Flywheel dust cover
6. Pitman arm and idler arm
7. Axle housing assembly
8. Oil pan fixing bolts and nuts
9. Oil pan

Installation steps
To install, follow the removal steps in the reverse order.

Fig. 6A1-58

REMOVAL

Preparation:
- Disconnect battery ground cable.
- Drain engine oil.
- Lift vehicle by supporting the frame.
- Remove front wheels.

1. **Oil level dipstick**
   - Remove a dip stick from level gage tube.
2. **Stone guard**
3. **Radiator under fan shroud**
4. **Suspension crossmembers**
   - Remove fixing bolts, 2 pcs each per side.
5. **Flywheel dust cover**
6. **Pitman arm and idler arm**
   - Using the special tool, remove pitman arm from the steering unit.
     Remover: J-29107
   - Remove four fixing bolts four idler arm.
7. **Axle housing assembly**
   - Remove two bolts and nuts from housing isolators on both sides. At this time, support the axle with a garage jack.
8. **Oil pan fixing bolts and nuts**
9. **Oil pan (Fig. 6A1-59)**
   - Using sealer cutter, remove oil pan.
     Sealer cutter: J-37228

     NOTE:
     Do not deform or damage the flange of oil pan. Replace the oil pan if deformed or damaged.

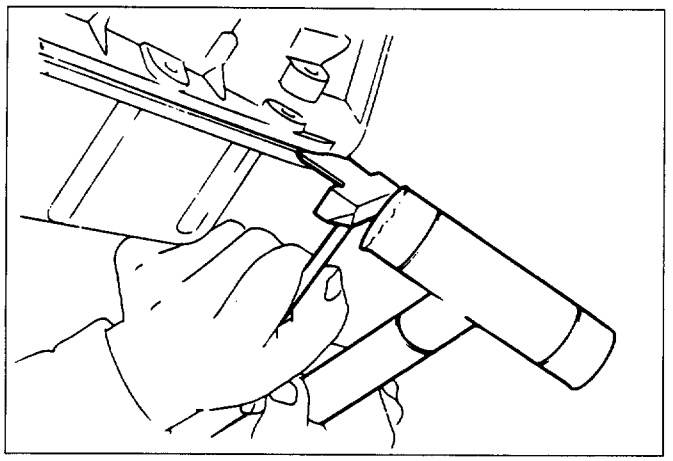

Fig. 6A1-59

INSTALLATION

9. Oil pan (Fig. 6A1-60)

- Remove residual sealant, lubricant and moisture from mounting surface, then dry throughly.
- Apply a properly wide bead of sealant (TB-1207C or equivalent) to mounting surface of oil pan. Sealant bead must be continuous.
- Oil pan must be installed within 5 minutes after sealant is applied.

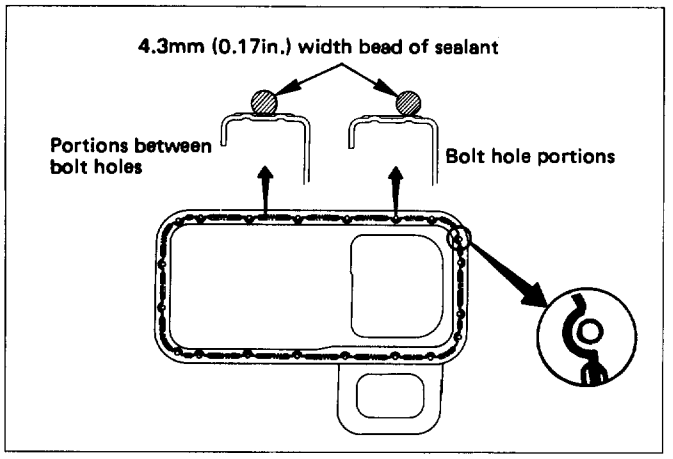

Fig. 6A1-60

8. Oil pan fixing bolts and nuts

- Tighten oil pan fixing bolts and nuts to the specified torque.

Torque N·m (lb·in)	10 (87)

7. Axle housing assembly

- Tighten fixing bolts to the specified torque.

Torque N·m (lb·ft)	82 (61)

- Tighten fixing bolts and nuts to the specified torque.

Torque N·m (lb·ft)	152 (112)

6. Pitman arm and idler arm

- Tighten idler arm fixing bolt to the specified torque.

Torque N·m (lb·ft)	44 (33)

- Engage teeth of pitman arm and steering unit, and tighten bolt to the specified torque.

Torque N·m (lb·ft)	216 (159)

5. Flywheel dust cover

4. Suspension cross member

- Tighten fixing bolts to the specified torque.

Torque N·m (lb·ft)	78 (58)

3. Radiator under fan shroud

2. Stone guard

1. Dipstick

OIL PUMP

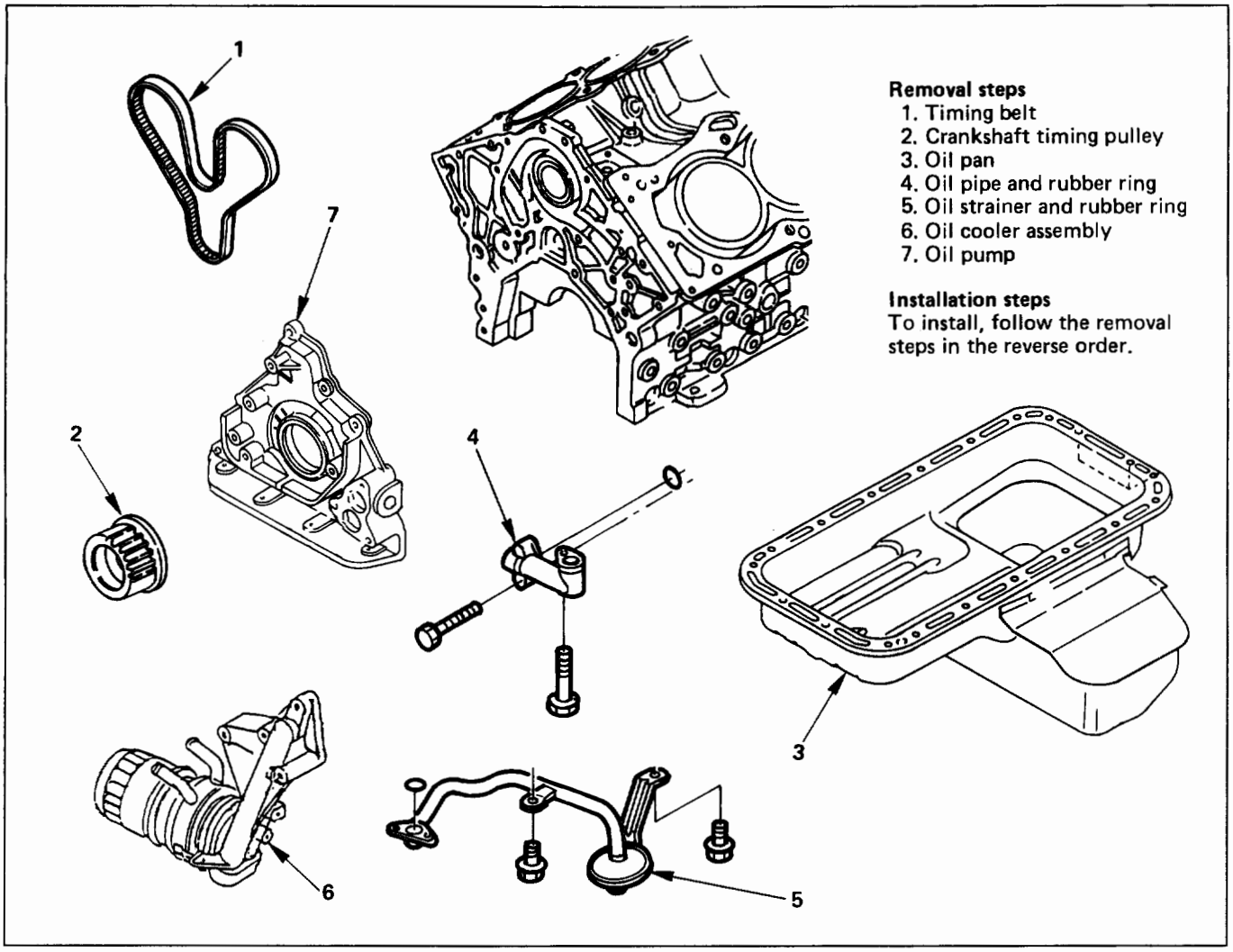

Fig. 6A1-61

REMOVAL

1. **Timing belt**
   - See "Timing Belt Removal and Installation".
2. **Crankshaft timing pulley**
3. **Oil pan**
   - See "Oil Pan Removal and Installation".
4. **Oil pipe and rubber ring**
5. **Oil strainer and rubber ring**
6. **Oil cooler assembly**
7. **Oil pump**
   - Remove sealant from mounting surfaces of oil pump and cylinder block.
   - Take care not to damage mounting surfaces of oil pump and cylinder block.

INSTALLATION

7. **Oil pump (Fig. 6A1-62)**
   - Apply sealant (TB-1207B or equivalent) to the oil pump mounting surface as shown in Fig. 6A1-62.
     Do not apply sealant to the oil ports.

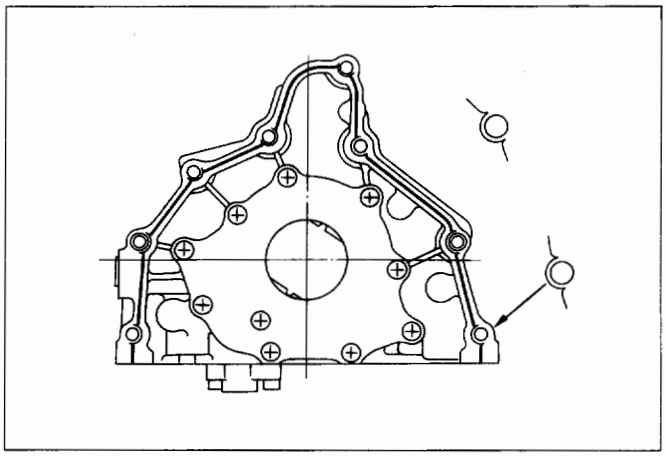

Fig. 6A1-62

- Use special tool when installing new oil seal. (Fig. 6A1-63)

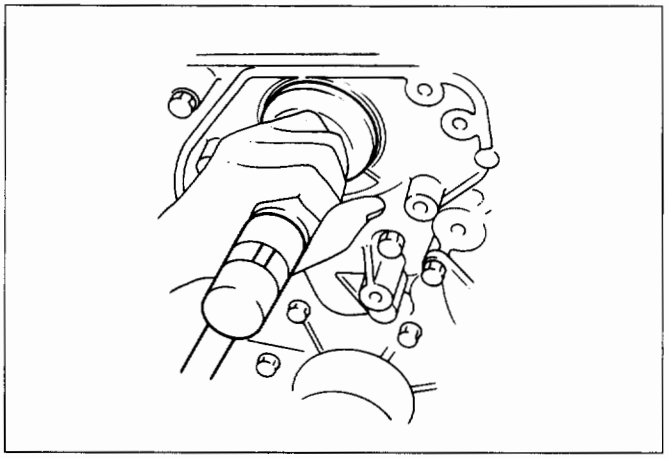

Fig. 6A1-63

Installer: J-39202

- Apply engine oil to the oil seal lip.
- Install oil pump assembly on the cylinder block.

NOTE:
Do not damage oil seal during installation of oil pump assembly.

- Tighten fixing bolts to the specified torque.

Torque N·m (lb·ft)	18 (13)

NOTE:
Take care not to drop lip spring of oil seal during oil pump reassembly.

6. **Oil cooler assembly**
5. **Oil pipe and rubber ring**
4. **Oil strainer and rubber ring**
3. **Oil pan**
   - See "Oil Pan Removal and Installation".
2. **Crankshaft timing pulley**
1. **Timing belt**
   - See "Timing Belt Removal and Installation".

OIL PUMP OIL SEAL

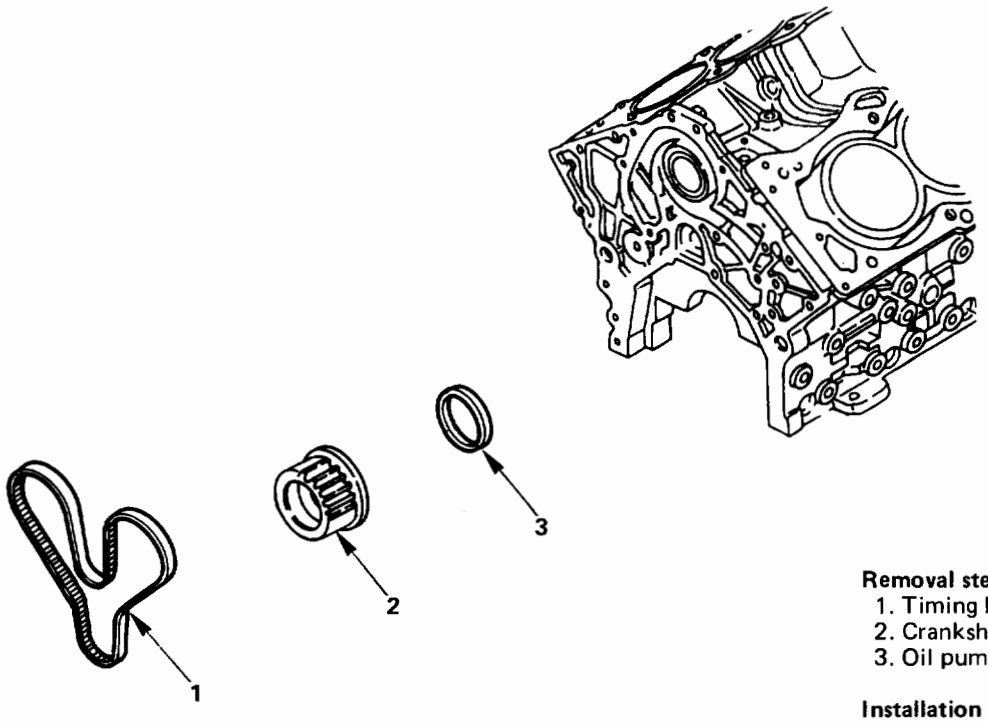

Removal steps
1. Timing belt
2. Crankshaft timing pulley
3. Oil pump oil seal

Installation steps
To install, follow the removal steps in the reverse order.

Fig. 6A1-64

REMOVAL

1. **Timing belt**
   - See "Timing Belt Removal and Installation".
2. **Crankshaft timing pulley**
3. **Oil pump oil seal**
   - Remove oil seal using a sealer puller.

   NOTE:
   Take care not to damage sealing surfaces of oil pump and crankshaft when removing oil seal.

INSTALLATION

3. **Oil pump oil seal**
   - Apply oil to oil seal lip, then install oil seal using special tool. (Fig. 6A1-65)
     Installer: J-39202

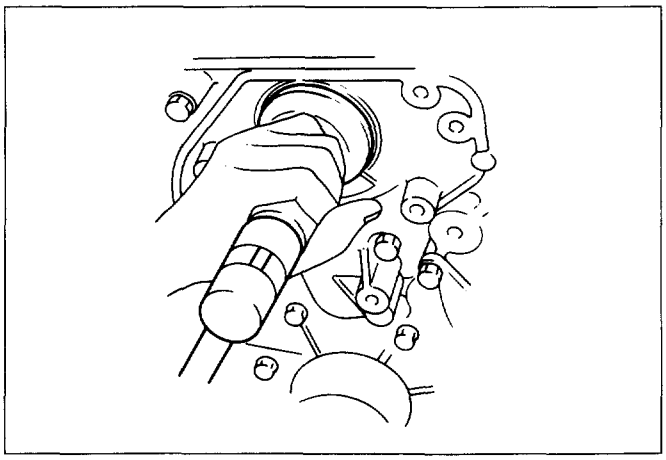

Fig. 6A1-65

2. **Crankshaft timing pulley**
1. **Timing belt**
   - See "timing belt removal and installation".

OIL FILTER

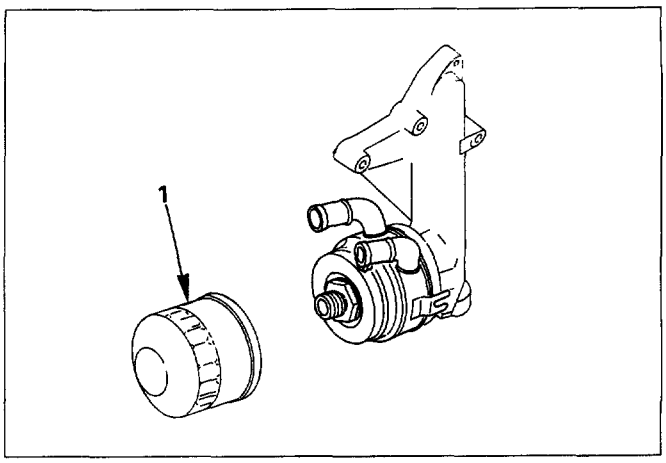

Fig. 6A1-66

REMOVAL

Preparation: Battery ground cable

1. **Oil filter**
   - Remove using the filter wrench.
     Filter wrench: J-36390
   - After installation of oil filter, check oil cooler fixing center bolt for looseness.

INSTALLATION

1. **Oil filter**
   - Clean filter fitting surface and apply small amount of oil to sealing surface of packing so that filter can be fitted tightly.

     NOTE:
     Make sure that the packing sealing surface is properly fit to the oil cooler sealing surface.
   - Rotate oil filter until oil cooler sealing surface comes in contact with gasket, then rotate additional 2/3 turn to tighten using filter wrench.
     Filter wrench: J-36390

OIL COOLER

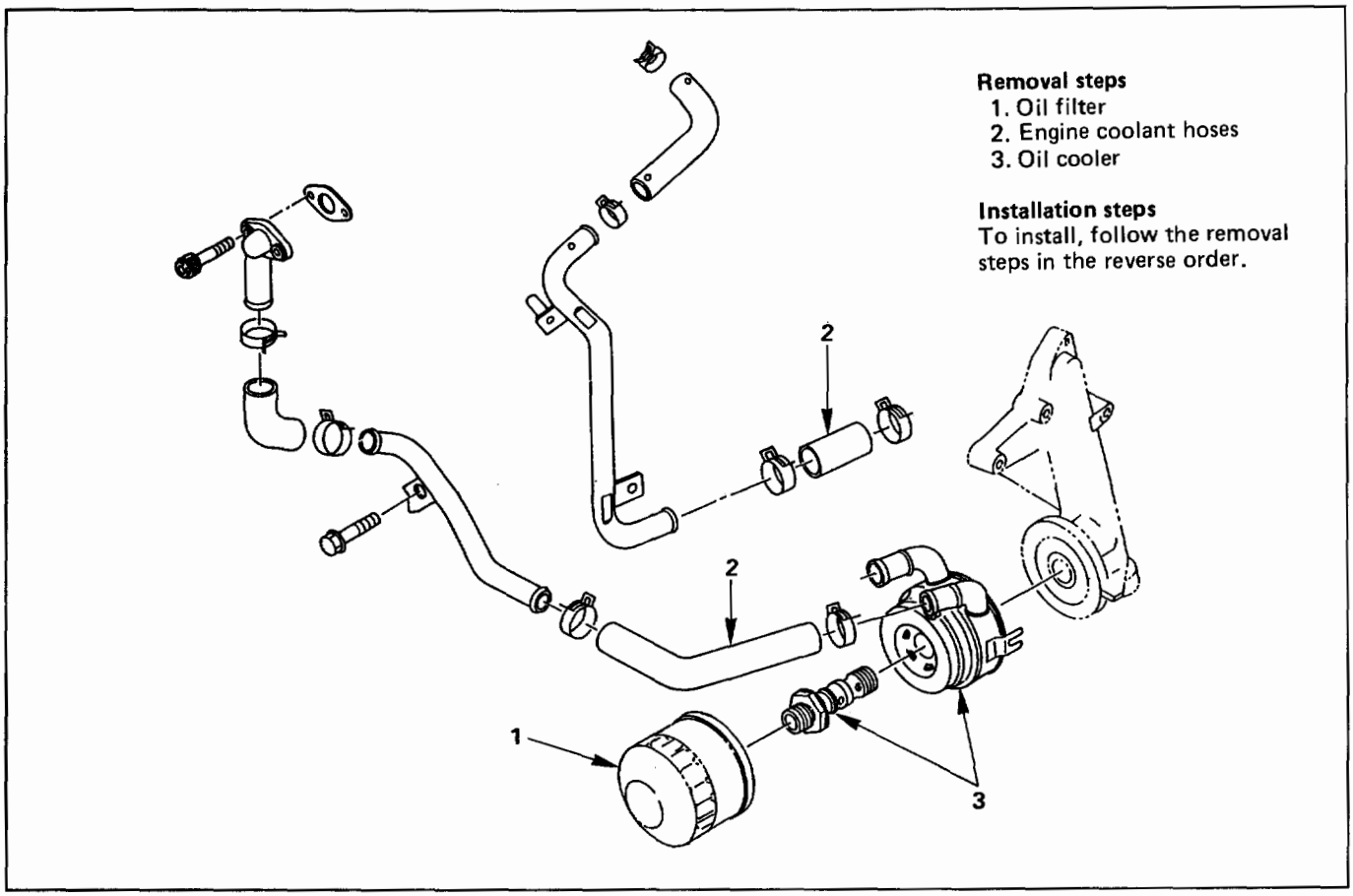

Fig. 6A1-67

REMOVAL

Preparation: Battery ground cable

1. **Oil filter**
   - Remove using the filter wrench.
     Filter wrench: J-36390
2. **Engine coolant hoses**
   - Disconnect two coolant hoses from oil cooler.
3. **Oil cooler**
   - Remove center bolt, then the oil cooler.

INSPECTION AND REPAIR

Check oil cooler and center bolt for cracks, flaws and other damage, and replace as necessary.

INSTALLATION

3. **Oil cooler**
   - Clean sealing surfaces of oil cooler and cylinder body.
   - Install center bolt and oil cooler on the oil cooler adapter, and tighten center bolt to the specified torque.

Torque N·m (lb·ft)	26 (20)

2. **Engine coolant hoses**
1. **Oil filter**

PISTON, PISTON RINGS AND CONNECTING ROD

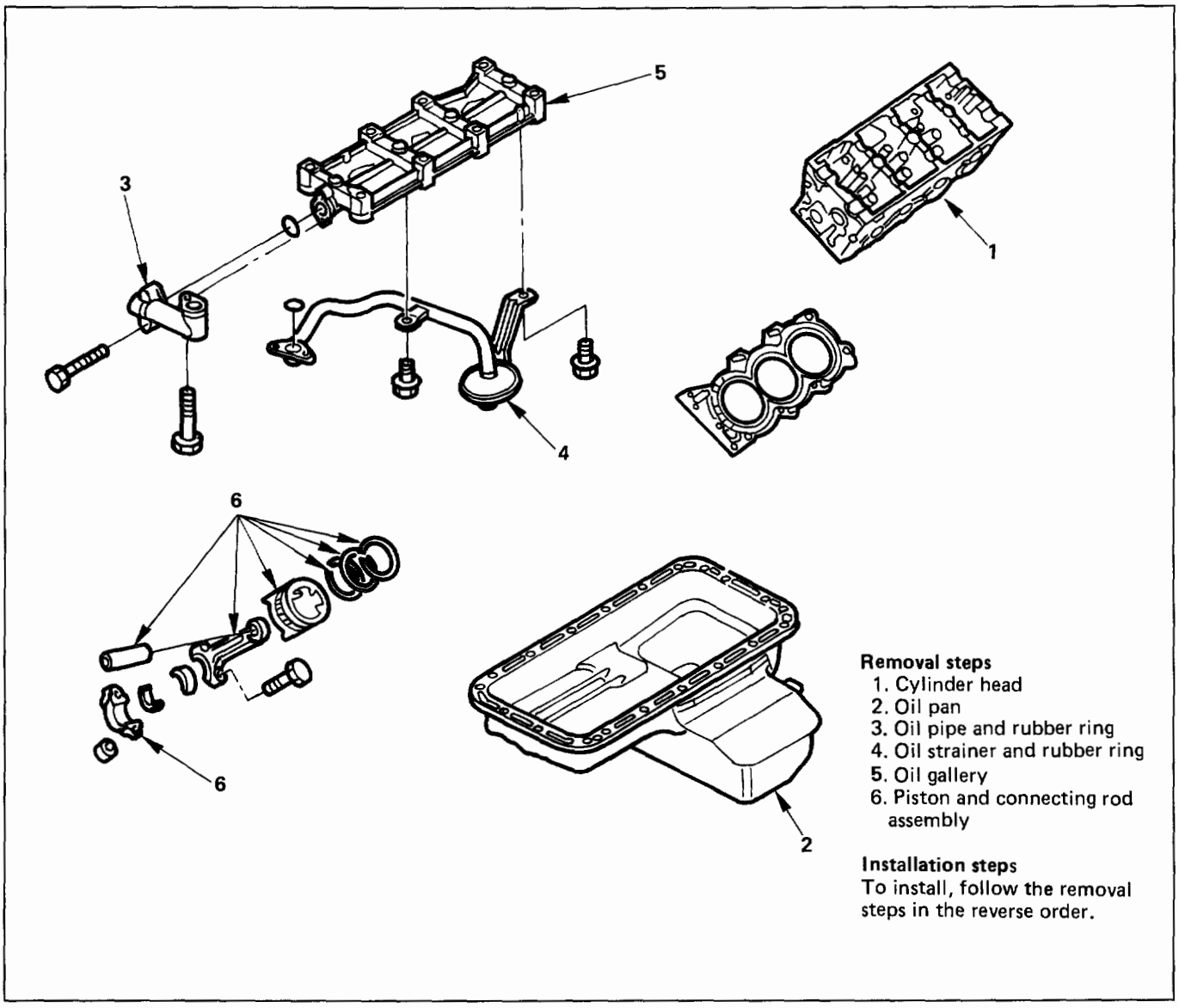

Fig. 6A1-68

REMOVAL

1. **Cylinder head**
   - See "Cylinder Head Removal and Installation".
2. **Oil pan**
   - See "Oil Pan Removal and Installation".
3. **Oil pipe and rubber ring**
4. **Oil strainer and rubber ring**
5. **Oil gallery**
6. **Piston and connecting rod assembly**
   - Before removing the bearing cap, remove carbon on the top of cylinder bore.
   - Push piston and connecting rod out from the top of cylinder bore.

INSTALLATION

6. **Piston and connecting rod assembly**
   - Apply engine oil to cylinder bore, connecting rod bearings and crank pins.
   - When installing the piston, its front mark must face the engine front side. (Fig. 6A1-69)
   - The bearing cap number must be same as connecting rod number.
   - Apply engine oil to the thread and sealing surface of each nut.
   - Tighten nuts to the specified torque.

Torque N·m (lb·ft)	54 (40)

NOTE:
- Do not apply engine oil to the bearing back faces and connecting rod bearing fitting surfaces.

- After tightening the nuts, make sure that the crankshaft rotates smoothly.

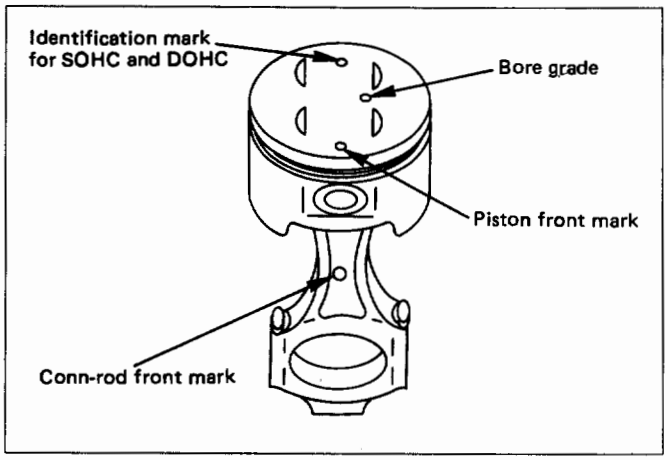

Fig. 6A1-69

5. **Oil gallery**
   - Tighten the bolts in 2 steps, in the order shown. (Fig. 6A1-70)

	1st step	2nd step
N·m (lb·ft)	29 (22)	55° — 65°

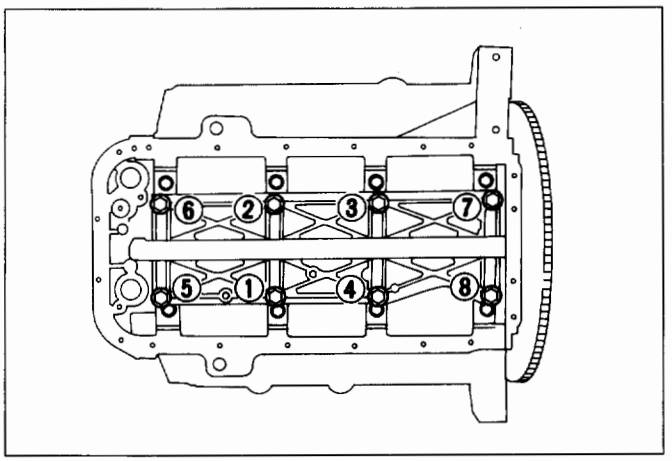

Fig. 6A1-70

4. **Oil strainer and rubber ring**
3. **Oil pipe and rubber ring**
2. **Oil pan**
   - See "Oil Pan Removal and Installation".
1. **Cylinder head**
   - See "Cylinder Head Removal and Installation".

CRANKSHAFT AND MAIN BEARINGS

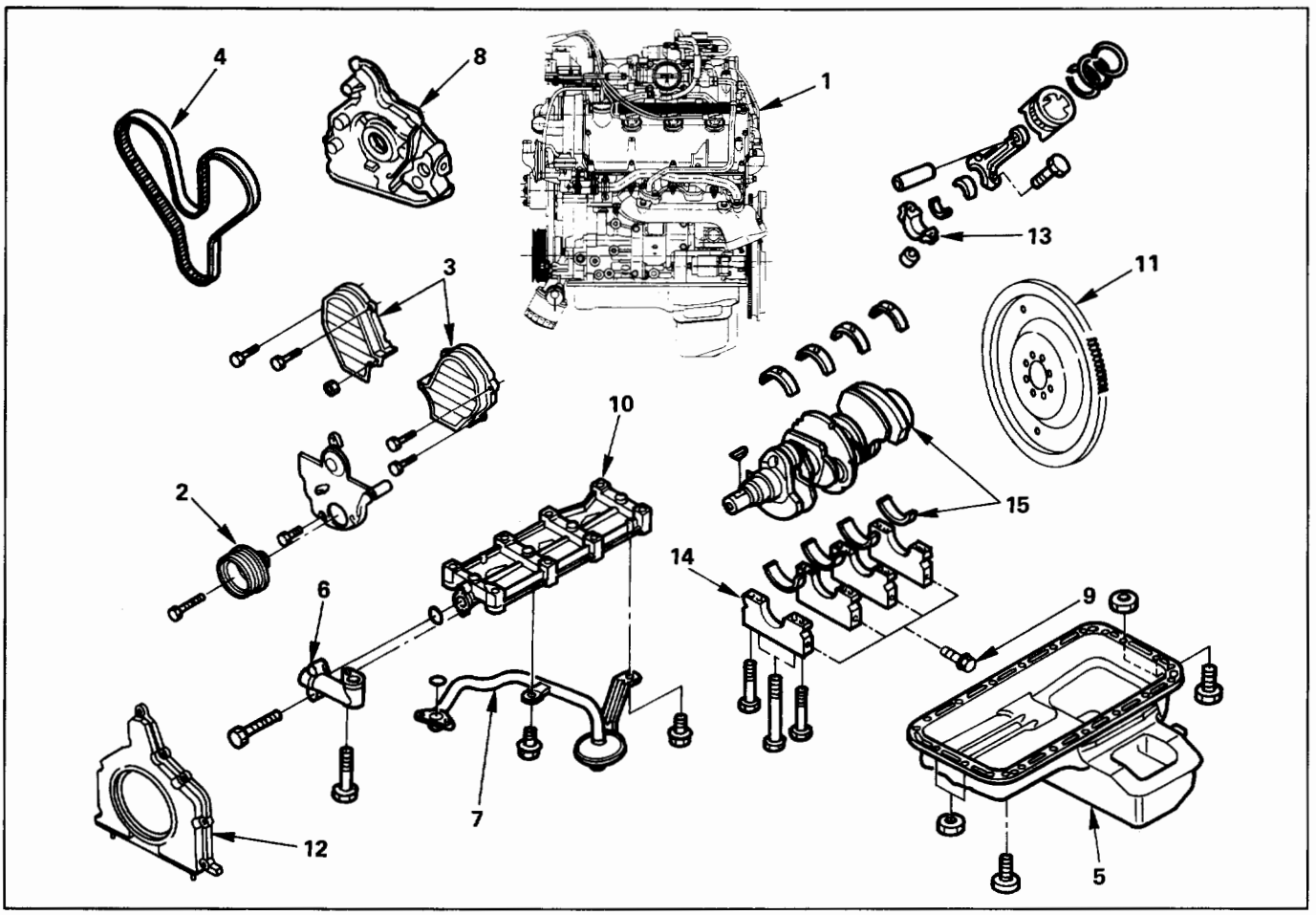

Fig. 6A1-71

REMOVAL

1. **Engine assembly**
   - See "Engine Assembly Removal and Installation".
2. **Crankshaft pulley**
3. **Timing belt cover**
4. **Timing belt**
5. **Oil pan**
6. **Oil pipe and rubber ring**
7. **Oil strainer and rubber ring**
8. **Oil pump assembly**
9. **Crankcase side bolts**
10. **Oil gallery**
11. **Flywheel**
12. **Rear oil seal retainers**
13. **Connecting rod caps**
14. **Crankshaft main bearing caps**
15. **Crankshaft and main bearings**

INSTALLATION

15. **Crankshaft and main bearings**
    - Install main bearings in the cylinder block and main bearing cap respectively. (Fig. 6A1-72)

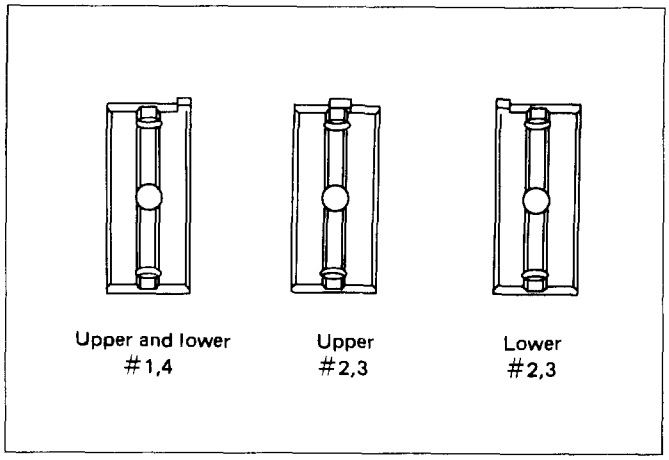

Fig. 6A1-72

- Apply new engine oil to upper and lower main bearings.

NOTE:
- Do not apply engine oil to the bearing back faces.
- Make sure that main bearings are in correct position.
- Install crankshaft with care.
- Apply engine oil to the thrust washer.
- Install thrust washer on No.3 journal. Oil grooves in thrust washer must face the crankshaft. (Fig. 6A1-73)

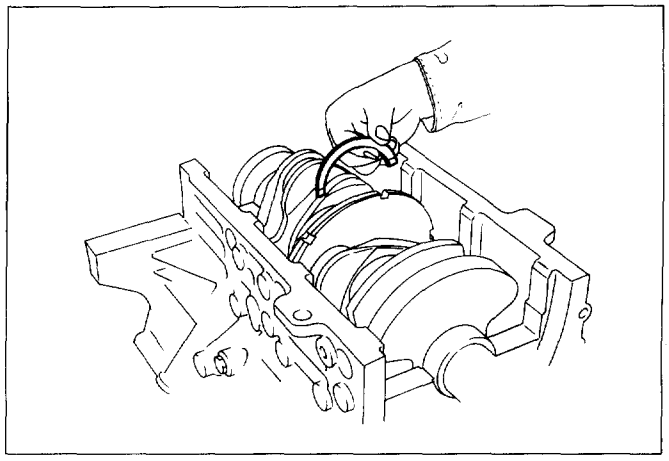

Fig. 6A1-73

14. **Crankshaft main bearing caps**
    - Apply engine oil to the thread and seating surface of each bearing cap fixing bolt.

NOTE:
- Do not apply engine oil to the bearing back faces.
- Install bearing caps in the order of numbers, starting with cylinder block front side.
- Tighten main bearing fixing bolts to the specified torque.

Torque N·m (lb·ft)	39 (29)

- After tightening the bolts, make sure that the crankshaft rotates smoothly.

13. **Connecting rod caps**
    - The cap number must be same as connecting rod number.
    - Apply engine oil to the thread and sealing surface of each nut.
    - Tighten nuts to the specified torque.

Torque N·m (lb·ft)	54 (49)

- After tightening the nuts, make sure that the crankshaft rotates smoothly.

12. **Rear oil seal retainers**
    - Remove oil on cylinder block and retainer fitting surface.
    - Apply sealant (TB1207 or equivalent) to retainer fitting surface, as shown in Fig. 6A1-74.
    - Apply engine oil to oil seal lip, and align a positioning pin hole in the cylinder block with that in the retainer.
    - Tighten retainer fixing bolts to the specified torque.

Torque N·m (lb·ft)	18 (13)

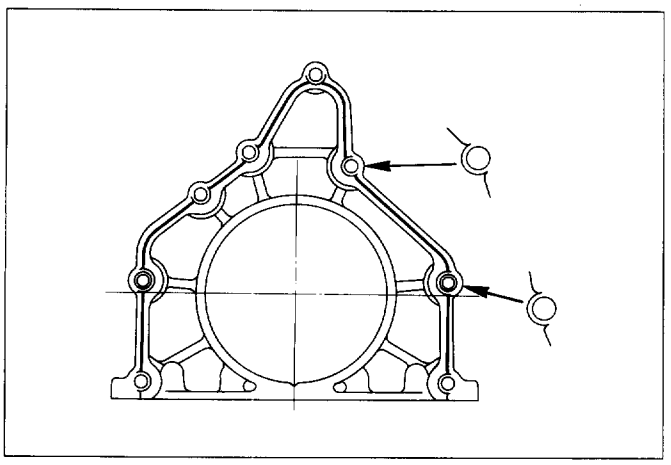

Fig. 6A1-74

11. Flywheel

- Clean the tapped holes in the crankshaft.
- Remove oil on crankshaft and flywheel fitting surface.

NOTE:

- Do not reuse the bolts.
- Do not apply oil or thread lock to the bolts.
- Tighten bolts to the specified torque.

Torque N·m (lb·ft)	54 (40)

10. Oil gallery

- Clean contact surfaces of oil gallery and main bearing.
- Apply engine oil to oil gallery fixing bolts and tighten bolts to the specified torque. (Fig. 6A1-75)

Torque N·m (lb·ft)	29 (22) —55° to 65°

9. Crankcase side bolts

- Cylinder block side bolts and tighten bolts in order to the specified torque. (Fig. 6A1-75)

Torque N·m (lb·ft)	39 (29)

NOTE:

- Do not apply the oil to the bolts

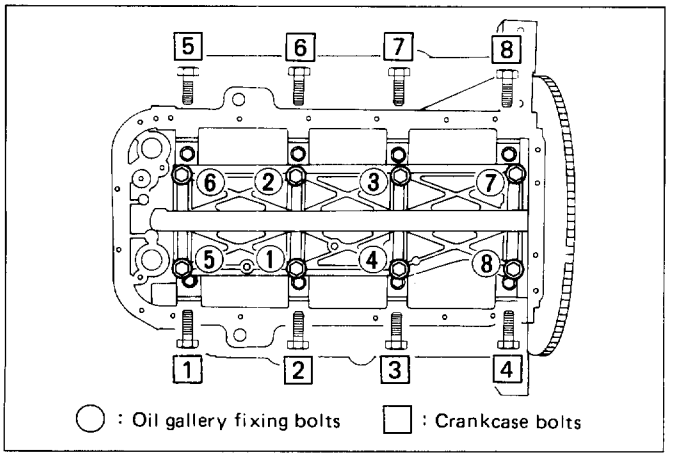

Fig. 6A1-75

8. Oil pump assembly

- Remove oil on cylinder block and oil pump mounting surface.
- Apply sealant (TB1207B or equivalent) to the oil pump mounting surface. (Fig. 6A1-76)
- Apply engine oil to seal lip.
- Install oil pump in the cylinder block, and tighten fixing bolts to the specified torque.

Torque N·m (lb·ft)	18 (13)

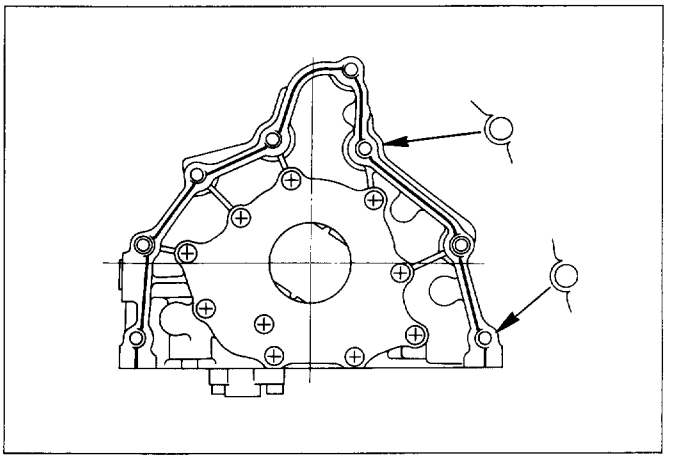

Fig. 6A1-76

7. Oil strainer and rubber ring

6. Oil pipe and rubber ring

5. Oil pan

- Remove oil on oil pan mounting surface, and dry the surface.
- Apply a proper wide bead of sealant (TB1207C or equivalent) to the oil pan mounting surface. The bead must be continuous. (Fig. 6A1-77)
- Oil pan must be installed within 5 minutes after sealant application.
- Tighten fixing bolts to the specified torque.

Torque N·m (lb·in)	10 (87)

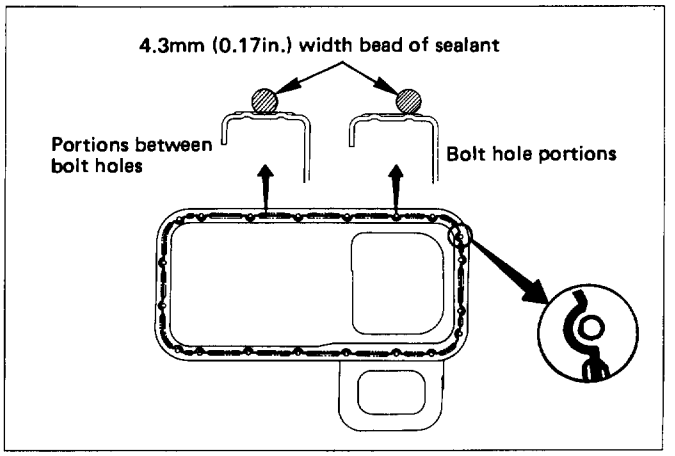

Fig. 6A1-77

4. **Timing belt**
   - See "Timing Belt Removal and Installation".
3. **Timing belt cover**
2. **Crankshaft pulley**
   - Using special tool J-8614-01, hold the crankshaft pulley.
   - Tighten center bolt to the specified torque.

Torque N·m (lb·ft)	167 (123)

1. **Engine assembly**
   - See "Engine Assembly Removal and Installation".

REAR OIL SEAL

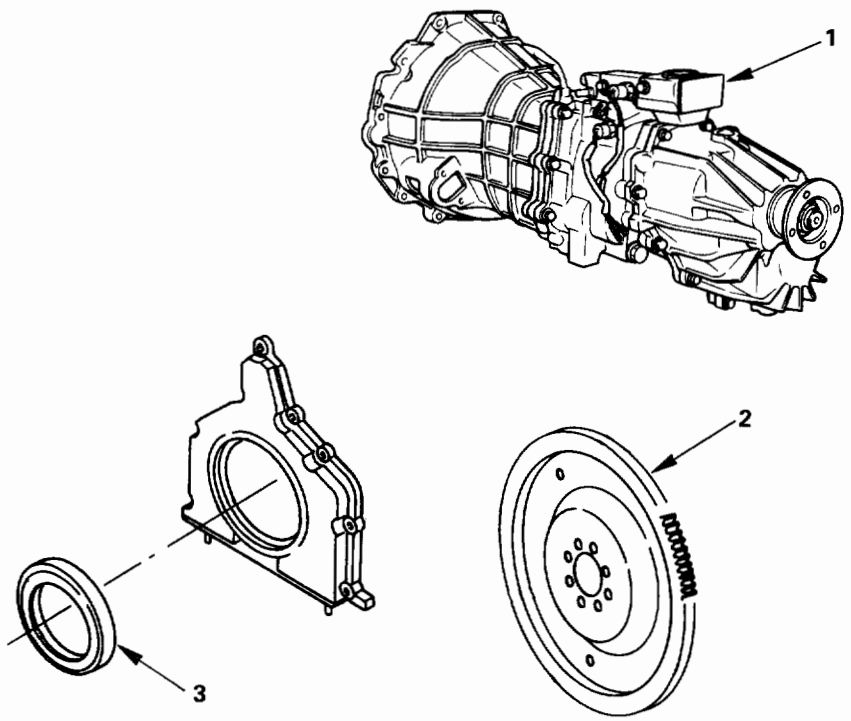

Removal steps
1. Transmission assembly
2. Flywheel
3. Rear oil seal

Installation steps
To install, follow the removal steps in the reverse order.

Fig. 6A1-78

REMOVAL

1. **Transmission assembly**
   - See "Transmission Removal and Installation" in Section 7.
2. **Flywheel**
3. **Rear oil seal**
   - Remove using a seal puller.

   NOTE:
   Take care not to damage the crankshaft or oil seal retainer when removing oil seal.

INSTALLATION

3. **Rear oil seal**
   - Apply engine oil to the oil seal lip, and install oil seal using installer. (Fig. 6A1-79)
   Installer: J-39201
2. **Flywheel**
   - Clean tapped holes in the crankshaft.
   - Remove oil on crankshaft and flywheel mounting surface.

NOTE:
- Do not reuse the bolts.
- Do not apply oil or thread lock to the bolts.
- Tighten bolts to the specified torque.

Torque N·m (lb·ft)	54 (40)

1. **Transmission**
   - See "Transmission Removal and Installation" in Section 7.

CAUTION

1) When assembling the engine and transmission, confirm that dowels have been mounted in the specified positions at the engine side. Besides, take care that dowel positions are different between the manual transmission and the automatic transmission. If assembled in the condition that dowels have not been mounted in the specified positions, it results in the transmission broken.

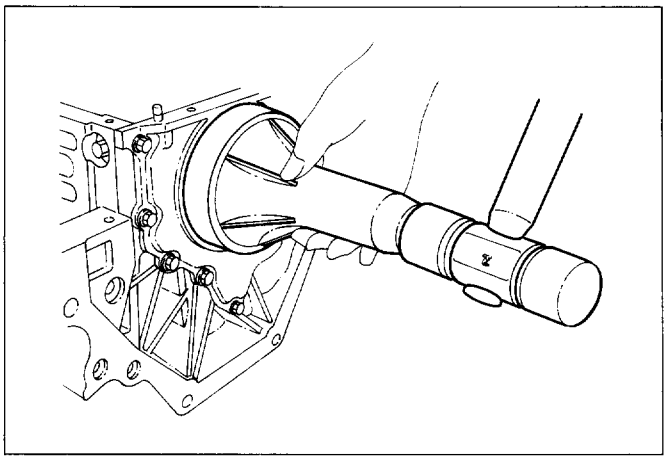

Fig. 6A1-79

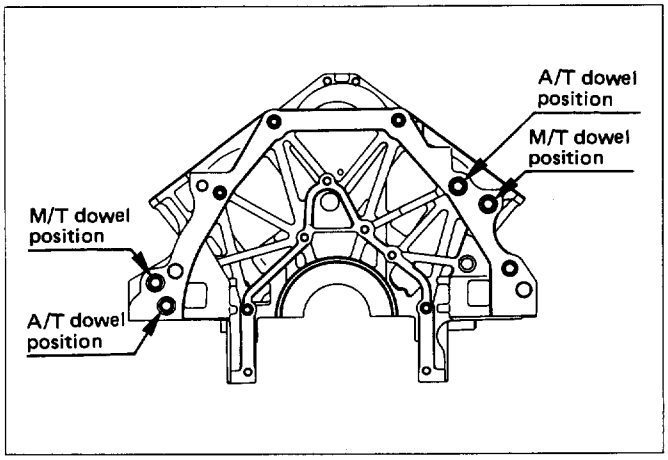

Fig. 6A1-79a

ENGINE ASSEMBLY

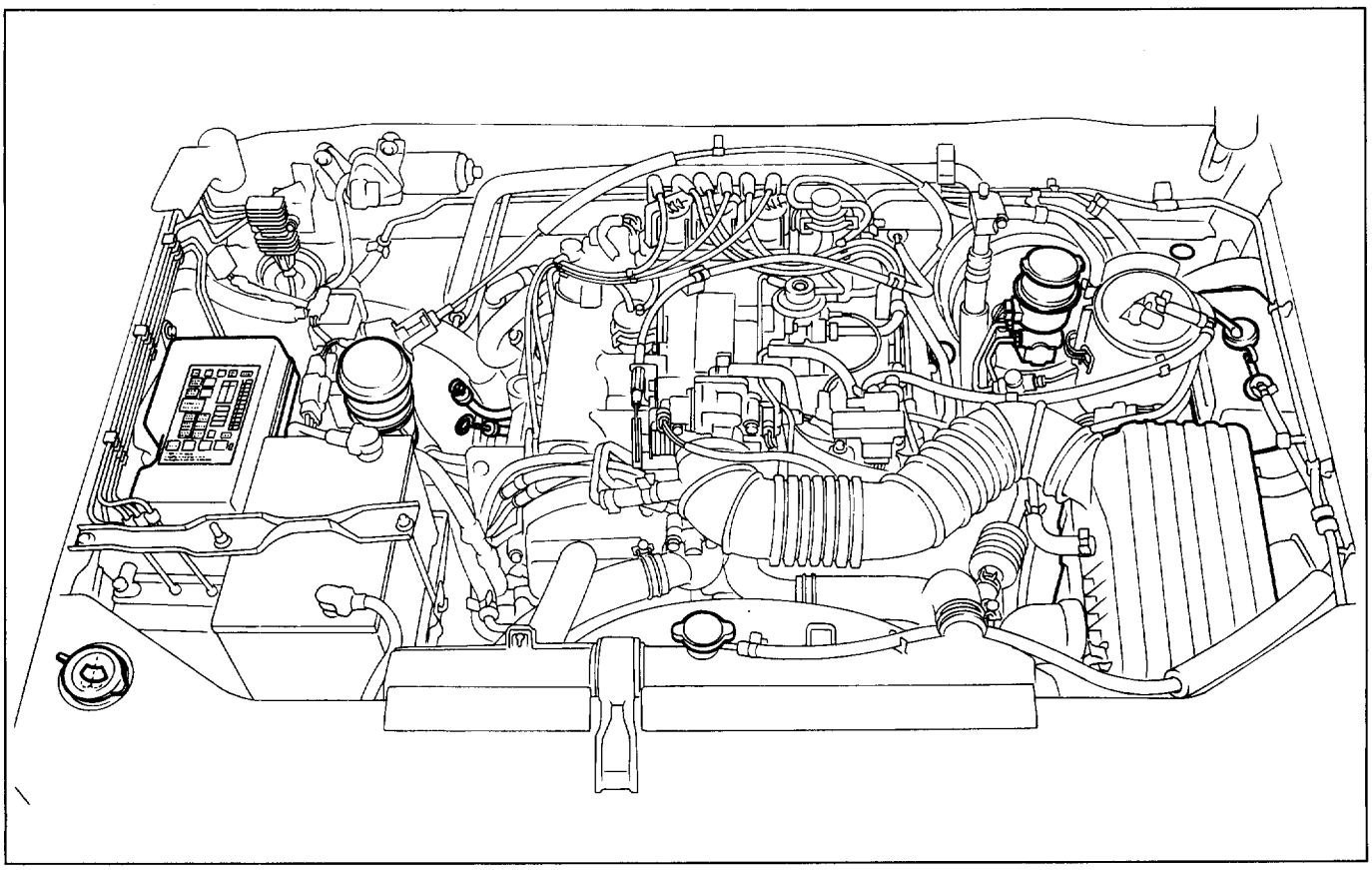

Fig. 6A1-80

REMOVAL

Preparation:
- Disconnect battery ground cable.
- Remove engine hood.
  In order to return the hood to the original position exactly, make alignment on the hood and hinges before removal.
- Drain radiator coolant.

1. **Accelerator cable**
   - Disconnect from throttle valve and common chamber.
2. **Ventilation hose**
3. **Air hose**
4. **Air cleaner assembly**
5. **Canister vacuum hose**
6. **Vacuum booster hose**
7. **Engine harness connectors**
   - Disconnect three connectors on canister side.
8. **Battery ground cables**
   - Disconnect two black and white connector clips from the power steering pump bracket.
9. **Ground cables**
   - Disconnect two terminals connected to the battery support and the front right frame.
10. **Bonding cable connector**
    - Disconnect connector on the left side dash panel.
11. **Bonding cable terminal**
    - Disconnect terminal on the back of left bank.
12. **Starter harness connector**
    - Disconnect from starter.
13. **Radiator**
    - Disconnect upper and lower hoses from the engine.
    - Disconnect coolant reserve tank hose from radiator.
    - Disconnect ATF hose from the pipe. (A/T)
    - Remove radiator lower hose clip from the hose bracket.
    - Remove radiator lower fan shroud.
    - Remove radiator.
14. **Power steering pump drive belt**
15. **Power steering pump**
    - Remove two bolts on the bracket, and place the pump along with piping on the body side.
16. **Air Conditioning compressor drive belt**
17. **Air Conditioning compressor**
    - Remove fixing bolts and shift aside the compressor with piping attached.
18. **Heater hoses**
    - Disconnect two hoses from the engine.
19. **ATF pipes**
    - Disconnect two pipes from right side engine mount.
20. **Transmission assembly**
    - See "Transmission Removal and Installation" in Section 7.
21. **Left side engine mount**
    - Support the engine.
    - Remove two fixing bolts from engine mount on chassis side.
22. **Right side engine mount**
    - Remove two fixing bolts from engine mount on chassis side.
23. **Engine assembly**

CAUTION:
When assembling the engine and transmission, confirm that dowels have been mounted in the specified positions at the engine side. Besides, take care that dowel positions are different between the manual transmission and the automatic transmission. If assembled in the condition that dowels have not been mounted in the specified positions, it results in the transmission broken.

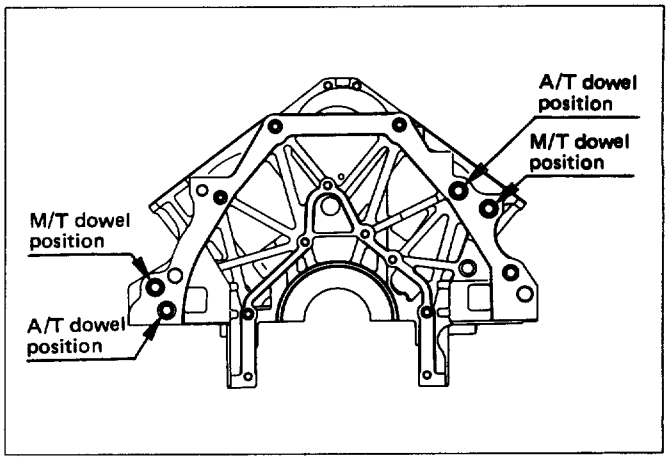

Fig. 6A1-80a

MAIN DATA AND SPECIFICATIONS

GENERAL SPECIFICATIONS

Items		Specifications	
Engine type, number of cylinders and arrangement		Water-cooled, four cycle V6 vertical	
Form of combustion chamber		Pent-roof type	
Valve mechanism		SOHC/DOHC belt drive	
Cylinder liner type		Casted in cylinder block	
Total piston displacement		3165 cc	
Cylinder bore × stroke		93.4mm × 77mm (3.677in × 3.031in)	
Compression ratio		SOHC: 9.3	DOHC: 9.8
Compression pressure	at 300rpm	SOHC: 12.0kg/cm^2	DOHC: 12.5kg/cm^2
Engine idling speed	rpm	Non-Adjustable (750)	
Valve clearance		Non-Adjustable	
Oil capacity		SOHC: 6.0 liters	DOHC: 6.0 liters
Ignition timing		Non-Adjustable (16°BTDC at Idle rpm)	
Spark plug		FR2LS, BKR6E-11, K20PR-U11 FR3LS, BKR5E-11, K16PR-U11	
Plug gap		1.0-1.1mm (0.03937in-0.043307in)	

TORQUE SPECIFICATION

N·m(lb·ft)

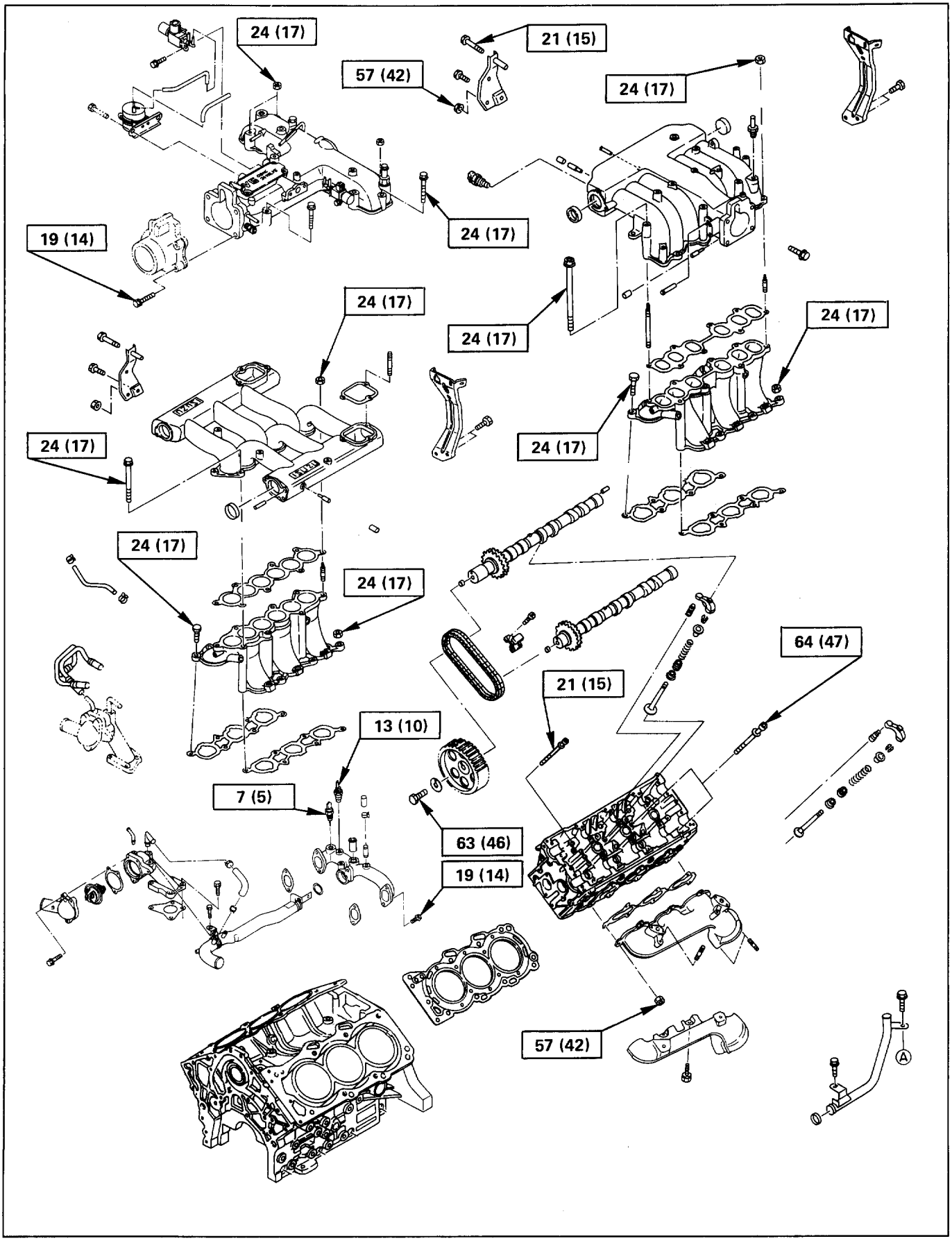

Fig. 6A1-81

TORQUE SPECIFICATION (CONT'D)

N·m(lb·ft)

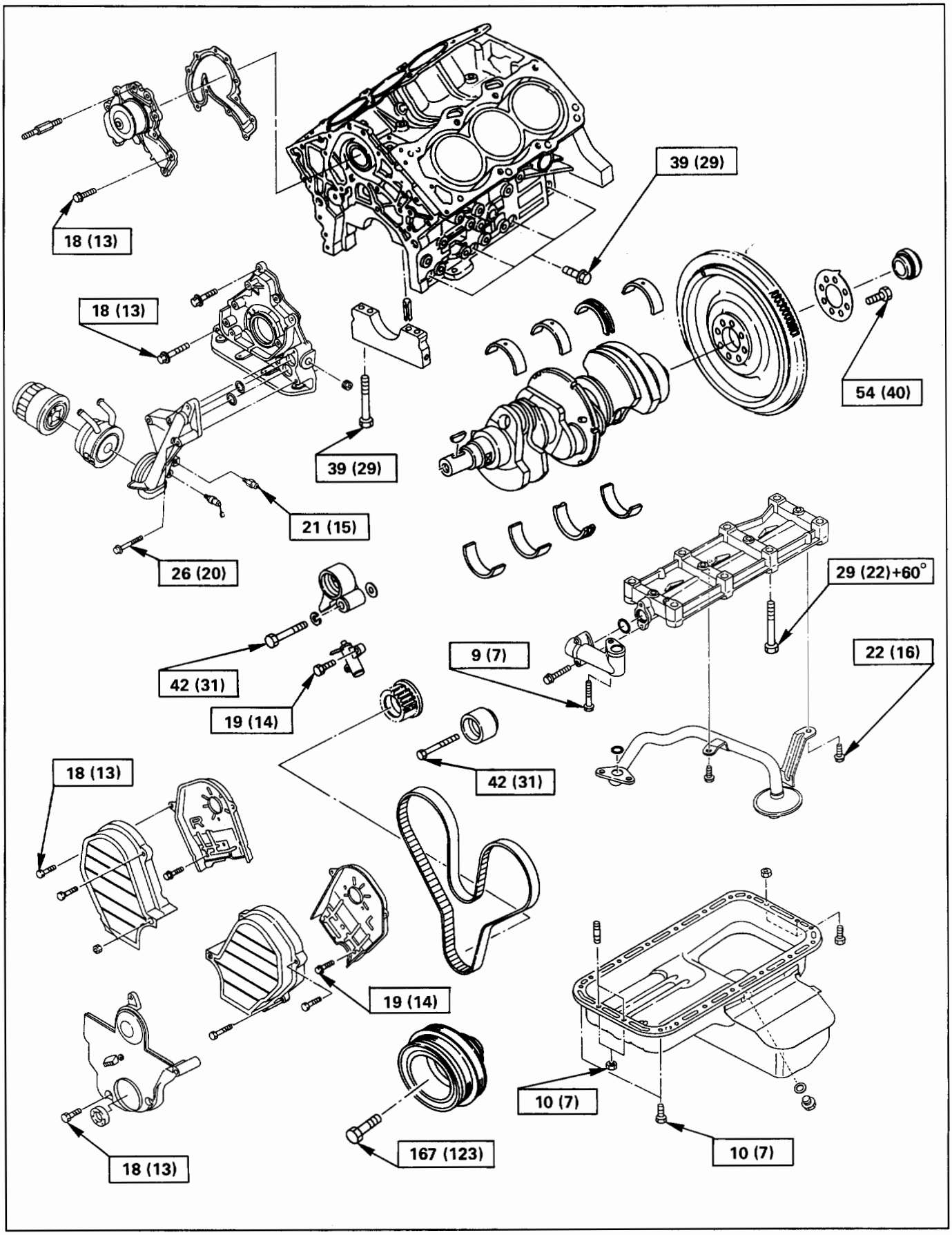

Fig. 6A1-82

TORQUE SPECIFICATION (CONT'D)

N·m(lb·ft)

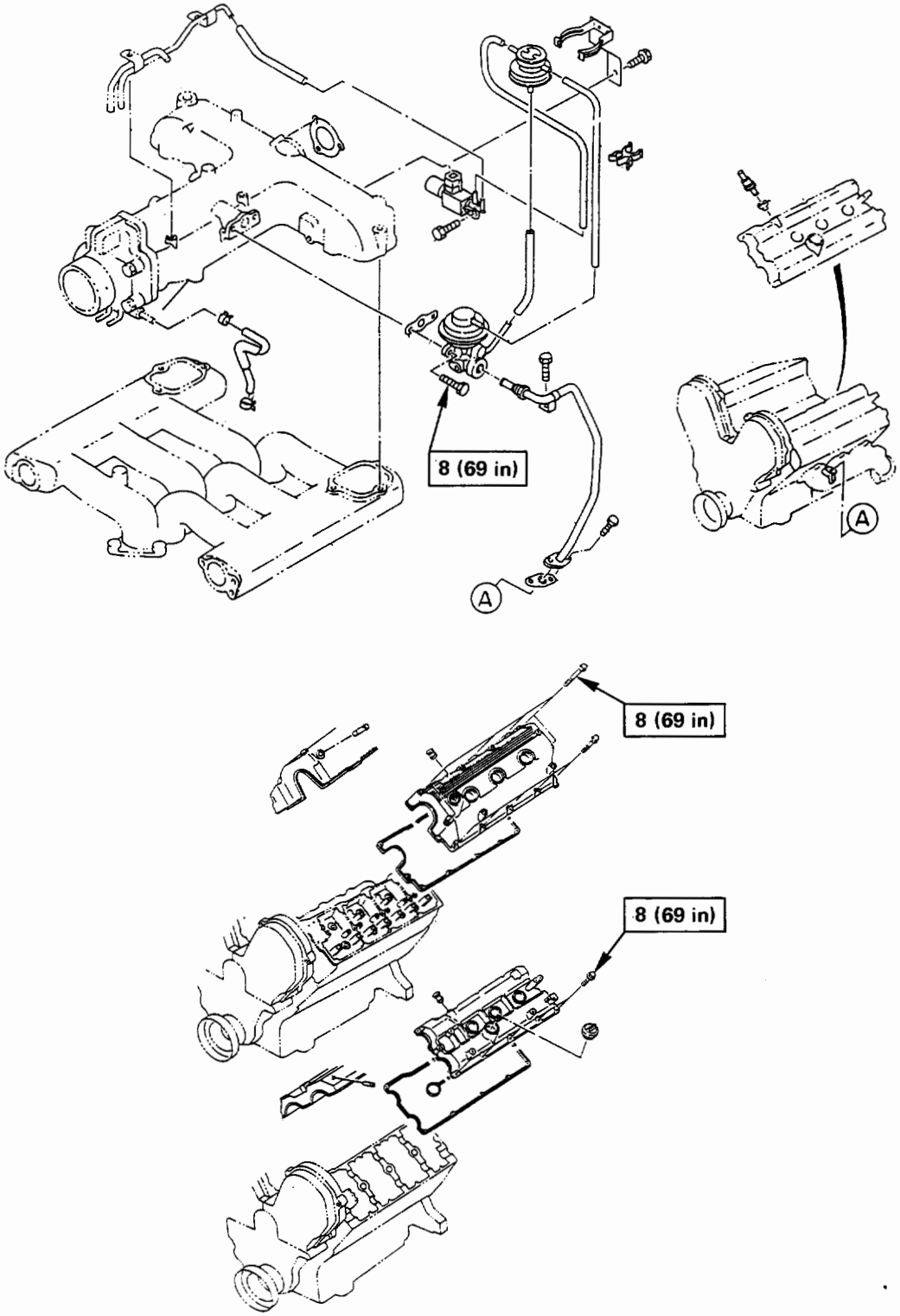

Fig. 6A1-83

TORQUE SPECIFICATION (CONT'D)

N·m(lb·ft)

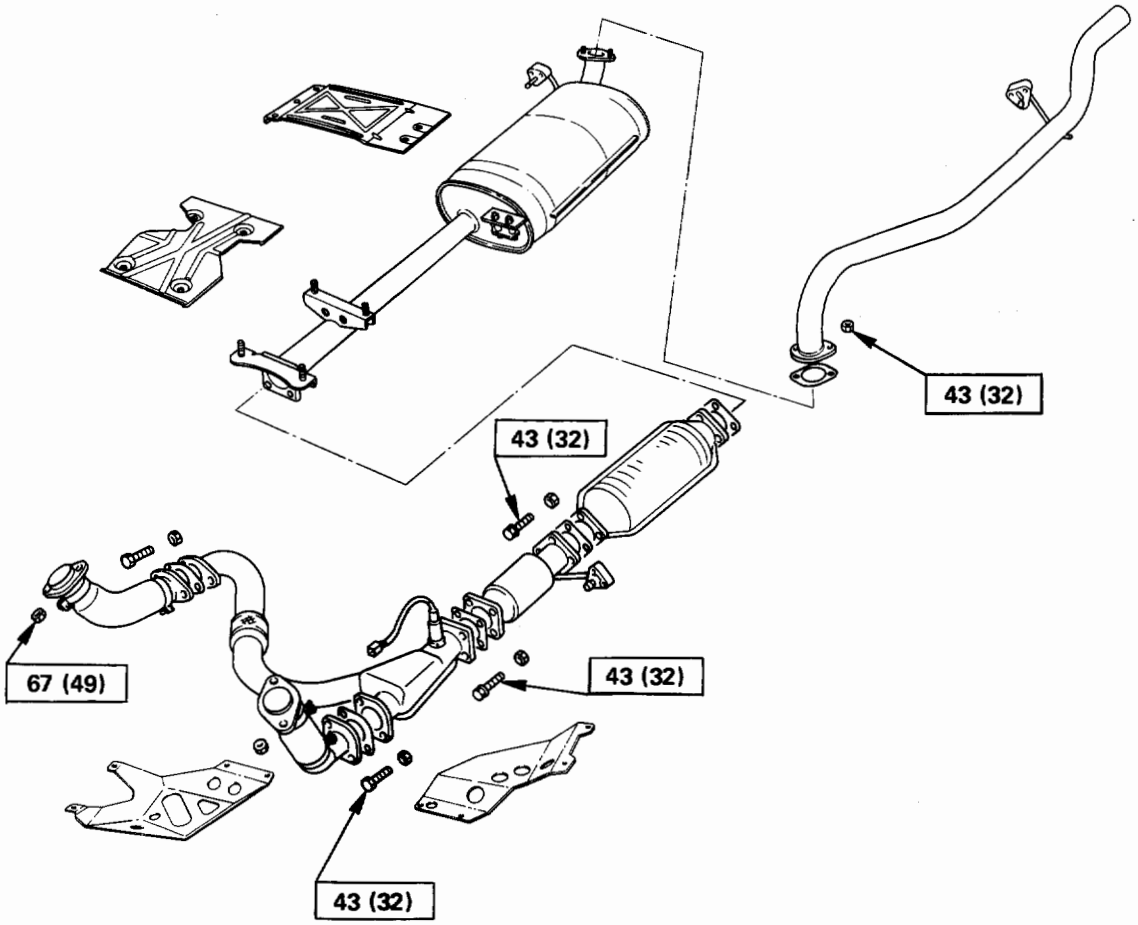

Fig. 6A1-84

TORQUE SPECIFICATION (CONT'D)

N·m(lb·ft)

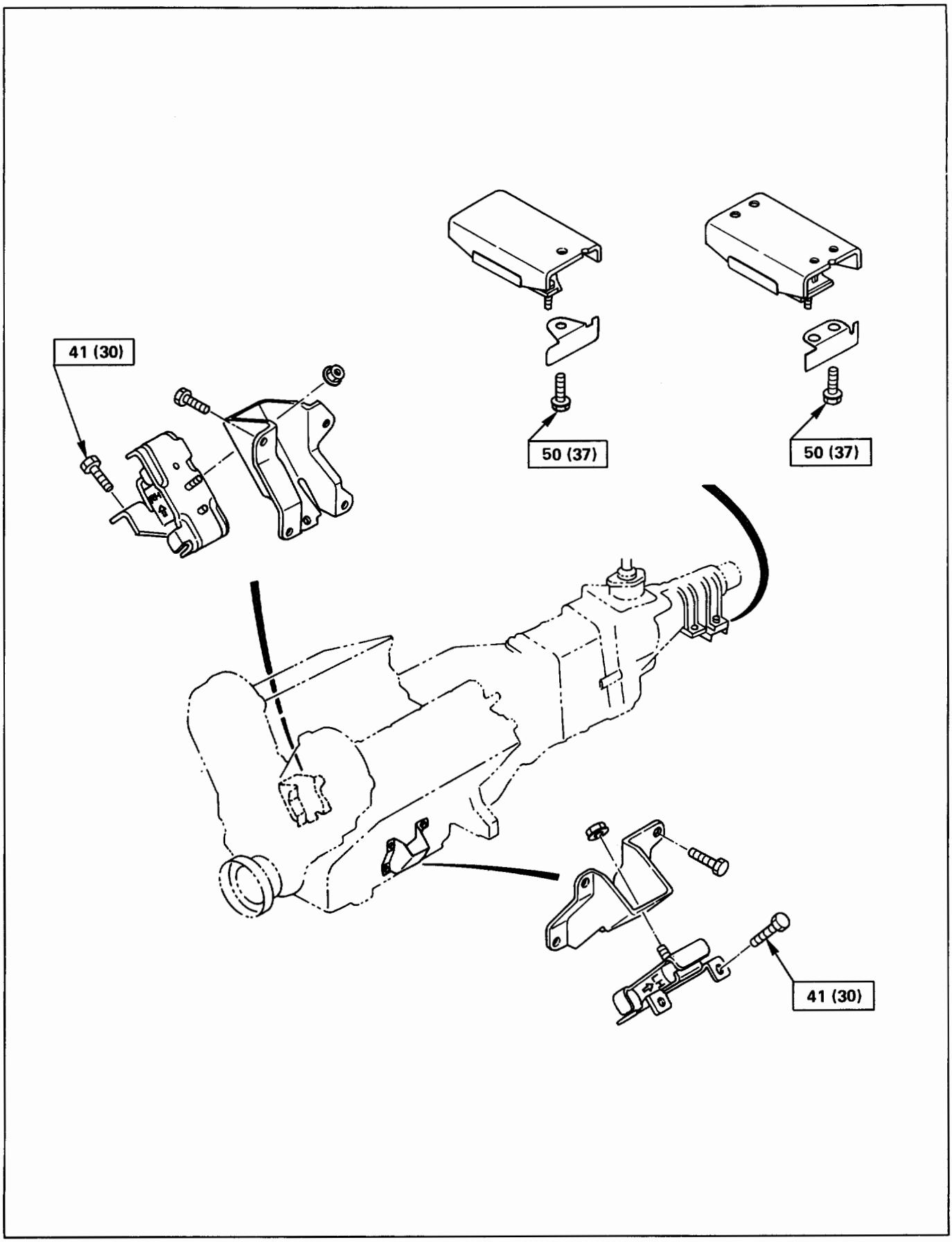

Fig. 6A1-85

SPECIAL TOOLS

ILLUSTRATION	TOOL NO. TOOL NAME
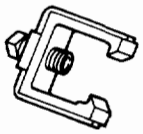	**J-21687-02** Remover: Tie rod end
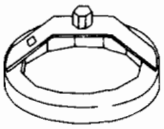	**J-36390** Wrench: Oil filter
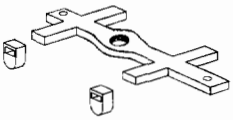	**J-39251** Compressor: Valve spring
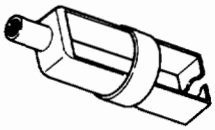	**J-37281** Remover: Oil controller
	J-38537 Installer: Oil controller
	J-29107 Universal pitman arm puller
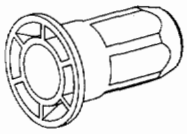	**J-39203** Installer: Camshaft oil seal
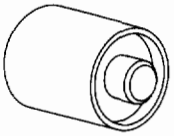	**J-39206** Installer: Pilot bearing

ILLUSTRATION	TOOL NO. TOOL NAME
	J-8614-01 Holder: Crankshaft
	J-37228 Seal cutter
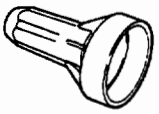	**J-39201** Installer: Rear oil seal
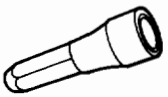	**J-39202** Installer: Oil pump oil seal
	J-24239-9 Cylinder head bolt wrench
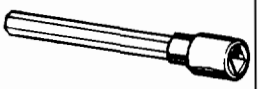	**J-39252** Cylinder head bolt wrench
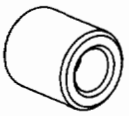	**J-39204** Adapter: Valve guide installer
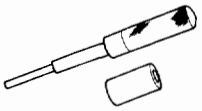	**J-37985** Replacer: Valve guide

MEMO

SECTION 6B

ENGINE COOLING

CONTENTS

General Description 6B-1
Diagnosis 6B-3
On-Vehicle Service 6B-4
Water Pump 6B-4
Thermostat 6B-6
Radiator 6B-7
Drive Belt Adjustment 6B-10
Main Data and Specifications 6B-12
Torque Specifications 6B-12
Special Tools 6B-13

GENERAL DESCRIPTION

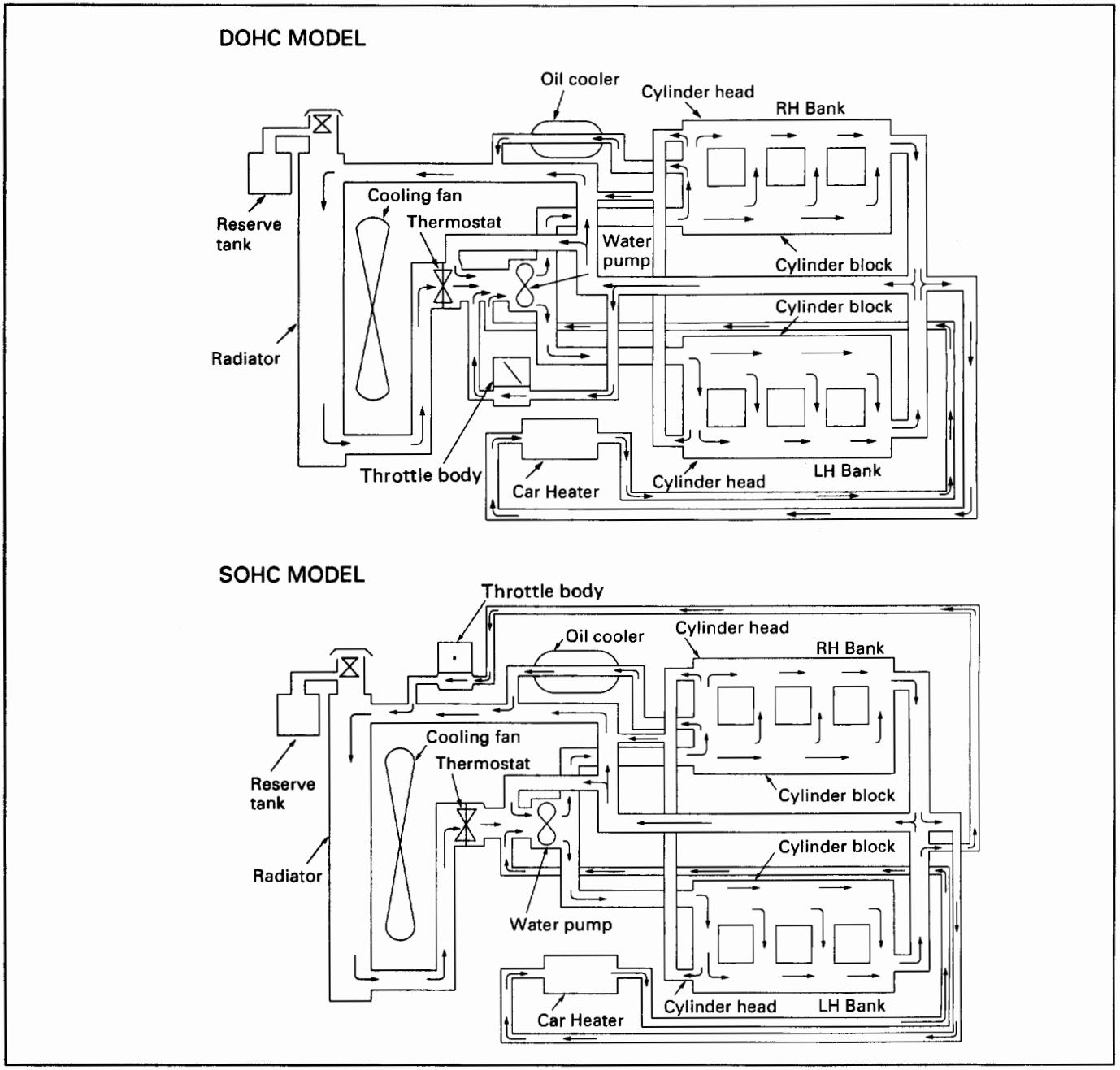

Fig. 6B-1

The cooling system is a pressurized Engine Coolant (EC) forced circulation type which consists of water pump, thermostat cooling fan, radiator and other components. The automatic transmission fluid is cooled by the EC in radiator.

WATER PUMP

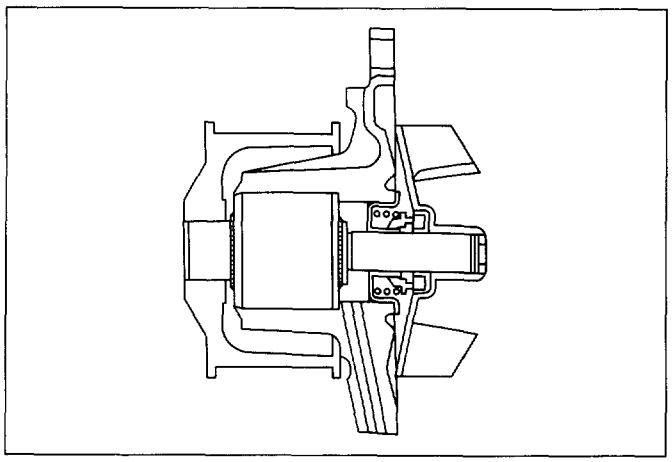

Fig. 6B-2

The EC pump is a centrifugal impeller type and is driven by timing belt. (Fig.6B-2)

THERMOSTAT

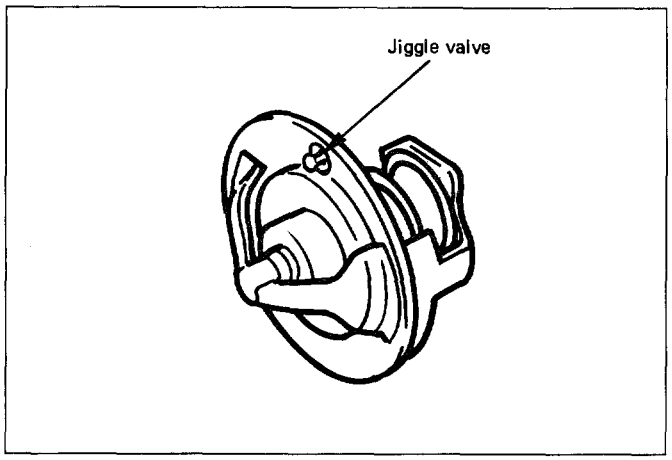

Fig. 6B-3

The thermostat is a wax pellet type with a jiggle valve and is installed in the thermostat housing. (Fig.6B-3)

RADIATOR

The radiator is a tube type with corrugated fins. In order to raise the boiling point of coolant, the radiator is fitted with a cap in which the valve is operated at 88.2 ~ 117.6 kPa (12.8 ~ 17.0 psi) pressure. (No oil cooler provided for M/T)

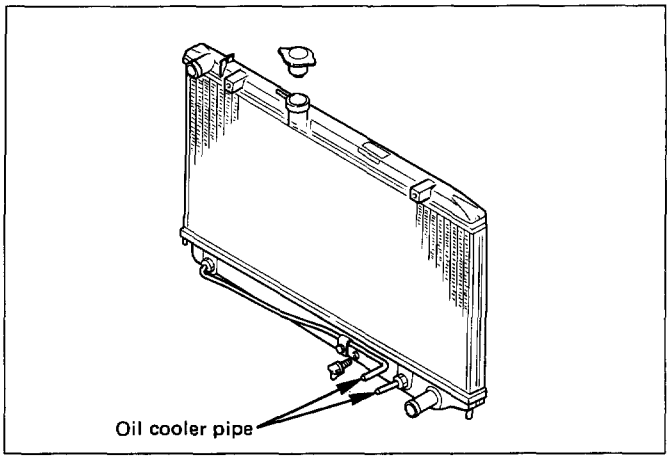

Fig. 6B-4

ANTI-FREEZE SOLUTION

- Relation between Mixing ratio and Freezing temperature of the EC varies with the ratio of anti-freeze solution in water. Proper mixing ratio can be determined by referring to the chart. Supplemental inhibitors or additives claiming to increase cooling capability that have not been specifically approved by Isuzu are not recommended for addition to the cooling system.

- Calculation mixing ratio (Fig. 6B-5)

  Mixing ratio

$$= \frac{\text{Anti-freese solution (Lit/gal.)}}{\text{Anti-freese solution (Lit/gal.)} + \text{Water (Lit/gal.)}}$$

  Note: Anti-freeze solution + Water= Total cooling system capacity.

Lit (Us gal)

Total Cooling System Capacity	M/T	8.5 (2.24)
	A/T	8.8 (2.32)

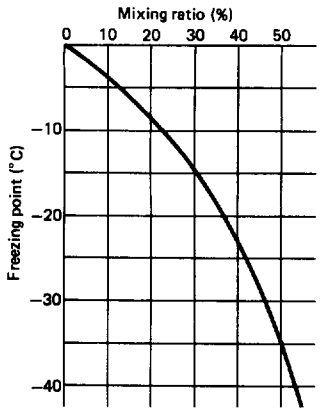

In case of 8.5 lit total cooling system capacity

Mixing ratio (%)	Anti-freeze solution: lit. (U. S. gal)	Water: lit. (U. S. gal.)
0	0 0	8.5 (2.2)
10	0.9 (0.3)	7.6 (2.0)
15	1.3 (0.4)	7.2 (1.9)
20	1.7 (0.5)	6.8 (1.8)
25	2.1 (0.6)	6.4 (1.7)
30	2.6 (0.7)	5.9 (1.6)
35	3.0 (0.8)	5.5 (1.5)
40	3.4 (0.9)	5.1 (1.3)
45	3.8 (1.0)	4.7 (1.2)
50	4.3 (1.1)	4.2 (1.1)

Fig. 6B-5

- Mixing ratio
  Check the specific gravity of engine coolant in the cooling system temperature ranges from 0° C to 50° C using a suction type hydrometer, then determine the density of the Engine Coolant by referring to the table. (Fig. 6B-6)

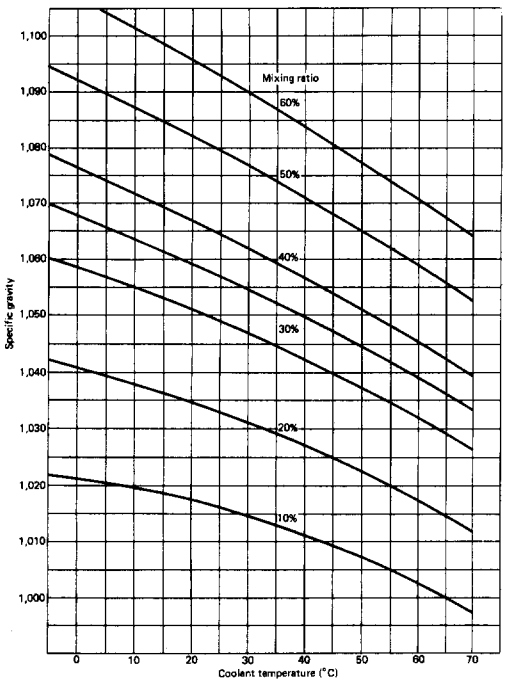

Fig. 6B-6

DIAGNOSIS

ENGINE COOLING TROUBLE

Condition	Possible cause	Correction
Engine overheating	Low Engine Coolant level	Replenish
	Thermo unit faulty	Replace
	Faulty thermostat	Replace
	Faulty Engine Coolant unit	Repair or replace
	Clogged radiator	Clean or replace
	Faulty radiator cap	Replace
	Low engine oil level or use of improper engine oil	Replenish or change oil
	Clogged exhaust system	Clean exhaust system or replace faulty parts
	Faulty Throttle Position sensor	Replace throttle valve assembly
	Open or shorted Throttle Position sensor circuit	Repair or replace
	Damaged cylinder head gasket	Replace
Engine overcooling	Faulty thermostat	Replace
Engine slow to warm-up	Faulty thermostat	Replace
	Thermo unit faulty	Replace

ON-VEHICLE SERVICE

DRAINING AND REFILLING COOLING SYSTEM

Before draining the cooling system, inspect the system and perform any necessary service to ensure that it is clean, does not leak and is in proper working order. The Engine Coolant (EC) level should be between the "MIN" and "MAX" lines of reserve tank when the engine is cold. If low, check for leakage and add EC up to the "MAX" line. There should not be any excessive deposit of rust or scales around the radiator cap or radiator filler hole, and the EC should also be free from oil. Replace the EC if excessively dirty.

1. Completely drain the cooling system by opening the drain petcock at the bottom of the radiator.
2. Remove the radiator cap.

> **WARNING**
> To avoid the danger of being burned, do not remove the cap while the engine and radiator are still hot. Scalding fluid and steam can be blown out under pressure.

3. Disconnect all hoses from the EC reserve tank. Scrub and clean the inside of the reserve tank with soap and water. Flush it well with clean water, then drain it. Install the reserve tank and hoses.
4. Refill the cooling system with the EC using a solution that is at least 50 percent antifreeze but no more than 70 percent antifreeze.
5. Fill the radiator to the base of the filler neck. Fill the EC reserve tank to "MAX" line when the engine is cold.
6. Block the drive wheels and firmly apply the parking brake. Shift an automatic transmission to "P" (Park) or a manual transmission to neutral.
7. Remove the radiator cap. Start the engine and warm it up at 2,500 ~ 3,000 rpm for about 30 minutes.
8. When the air comes out from the radiator filler neck and the EC level has gone down, replenish with the EC. Repeat this procedure until the EC level does not go down. Then stop the engine and install the radiator cap. Let the engine cool down.
9. After the engine has cooled, replenish with EC up to the "MAX" line of the reserve tank.
10. Start the engine. With the engine running at 3,000 rpm, make sure there is no running water sound from the heater core (behind the center console).
11. If the running water sound is heard, repeat steps 7 to 10.

WATER PUMP

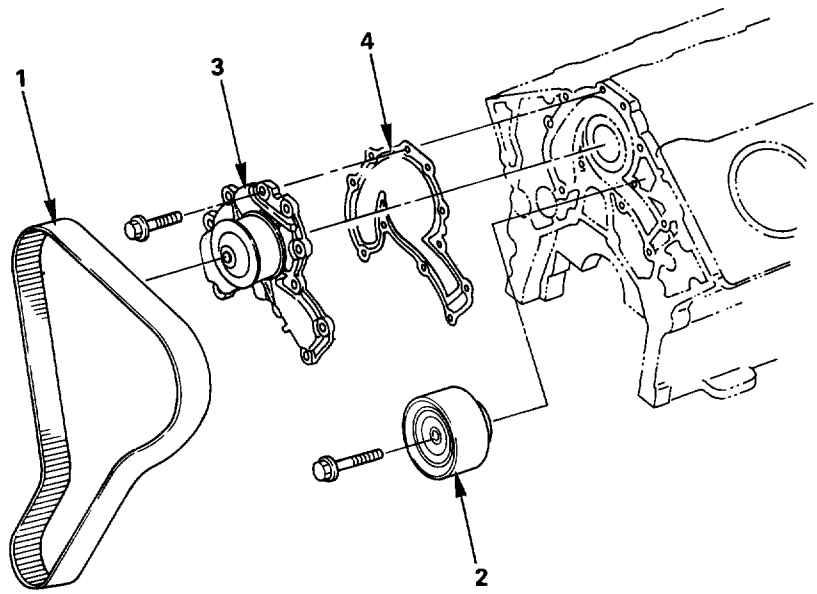

Removal steps
1. Timing belt
2. Idle pulley
3. Water pump assembly
4. Gasket

Installation steps
To install, follow the removal steps in the reverse order.

Fig. 6B-7

REMOVAL

Preparation

- Disconnect battery ground cable.
- Drain coolant.
- Radiator hose (on inlet pipe side)

1. **Timing belt**
   - (Refer to Timing belt removal steps in Section 6A1, 6A2)
2. **Idle pulley**
3. **Water pump assembly**
4. **Gasket**

INSPECTION

Make necessary repair and parts replacement if extreme wear or damage is found during inspection. Should any of the following problems occur, the entire water pump assembly must be replaced.

- Cracks in the Engine Coolant (EC) pump body
- EC leakage from the seal unit
- Play or abnormal noise in the bearing
- Cracks or corrosion in the impeller

INSTALLATION

4. **Gasket**
   - Clean the mating surface of packing before installation.
3. **Water pump assembly**
   - Install coolant pump assembly and tighten bolts to the specified torque. (Fig. 6B-8)

Torque	N·m(lb·ft)	18(13)

- Tightening order

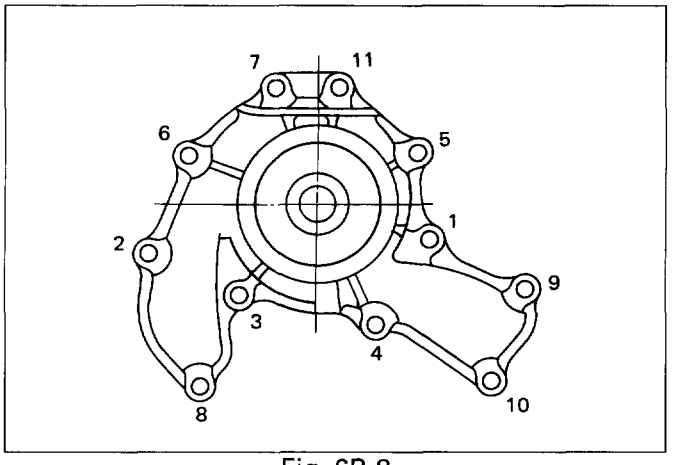

Fig. 6B-8

2. **Idle pulley**
   - Install idle pulley and tighten bolt to the specified torque.

Torque	N·m(lb·ft)	42 (31)

1. **Timing belt**
   - Install timing belt and adjust the belt tension.
   - (Refer to Timing belt installation steps in Section 6A1, 6A2)
   - Connect radiator inlet hose and replenish EC.
   - Connect battery ground cable.

THERMOSTAT

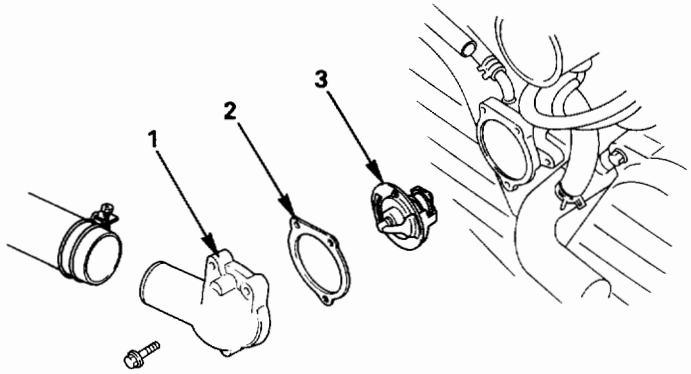

Removal steps
1. Inlet pipe
2. Packing
3. Thermostat

Installation steps
To install, follow the removal steps in the reverse order.

Fig. 6B-9

REMOVAL

Preparation

- Disconnect battery ground cable.
- Drain Engine Coolant from the radiator and engine.
- Disconnect radiator hose from the inlet pipe.

1. **Inlet pipe**
2. **Packing**
3. **Thermostat**

INSPECTION

Suspend the thermostat in a water-filled container using thin wire. Place a thermometer next to the thermostat.
Do not directly heat the thermostat.
Gradually increase the water temperature. Stir the water so that the entire water is same temperature. (Fig.6B-10)
Confirm the temperature when the valve first begins to open.

Valve opening temperature °C (°F)	74.5 ~ 78.5 (166.1 ~ 173.3)

Confirm the temperature when the valve is fully opened.

Valve full open temperature °C and lift (°F)	More than 10mm (0.39 in) at 90°C (194°F)

Make necessary repair and parts replacement if extreme wear or damage is found during inspection.
Fig. 6B-10

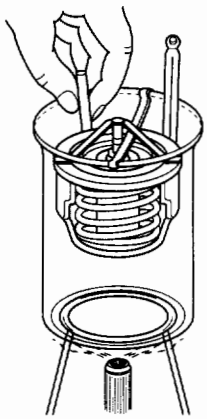

Fig. 6B-10

INSTALLATION

3. Thermostat

- Install thermostat into the thermostat housing, making sure that the jiggle valve in up position.

2. Packing

1. Inlet pipe

- Connect inlet pipe and tighten bolts to the specified torque.

Torque	N·m(lb·ft)	19 (14)

- Installation rubber hose
- Replenish Engine Coolant (EC)
- Start engine and check for EC leakage.

RADIATOR

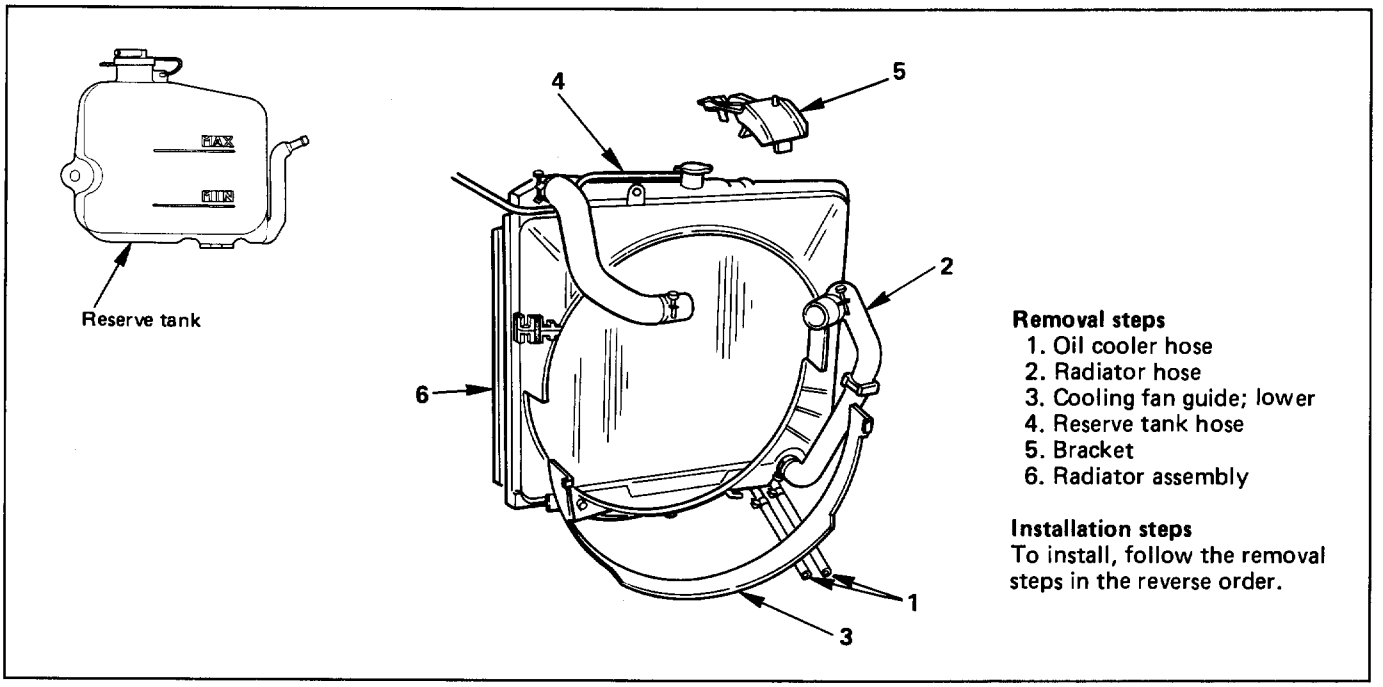

Removal steps
1. Oil cooler hose
2. Radiator hose
3. Cooling fan guide; lower
4. Reserve tank hose
5. Bracket
6. Radiator assembly

Installation steps
To install, follow the removal steps in the reverse order.

Fig. 6B-11

REMOVAL

Preparation

- Disconnect battery ground cable.
- Loosen a drain plug to drain EC.

1. Oil cooler hose

- Disconnect oil cooler hose on automatic transmission (A/T). (Fig.6B-12)

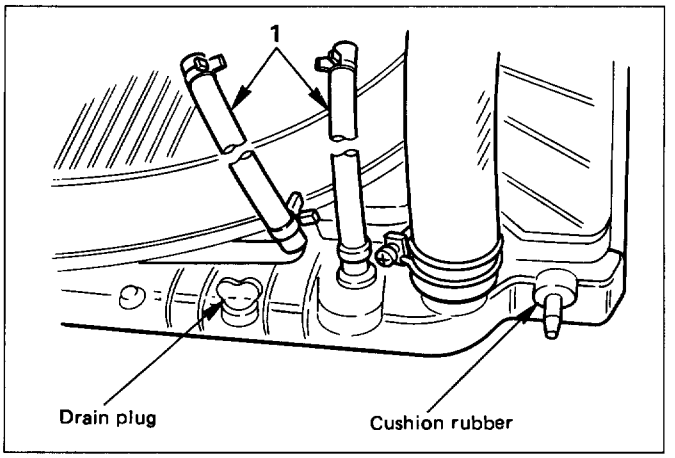

Fig. 6B-12

2. **Radiator hose**
   - Disconnect inlet hose and outlet hose from the engine.
3. **Fan guide, lower**
   - Remove clips on both sides and the bottom lock. (Fig. 6B-13)

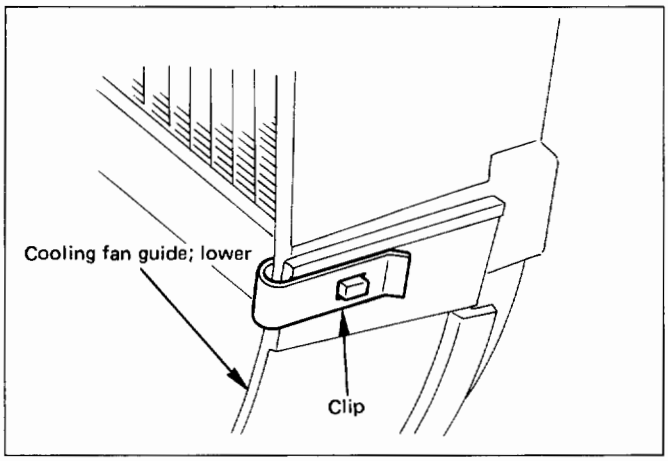

Fig. 6B-13

4. **Reserve tank hose**
   - Disconnect the hose from radiator.
5. **Bracket**
6. **Radiator assembly**
   - Remove upward the radiator assembly with hose, taking care not to damage the radiator core with a fan blade.
   - Remove cushion rubbers on both sides at the bottom.

INSPECTION

Radiator Cap

Measure the valve opening pressure of the pressurizing valve with a radiator filler cap tester. Replace the cap if the valve opening pressure is outside the standard range (Fig. 6B-14).

Valve opening pressure kPa (psi)	88.3 ~ 117.7 (12.8 ~ 17.1)

Cap tester: J-24460-01
Adapter: J-33984-A

Check the condition of the negative pressure valve in the center of the valve seat side of the cap. If considerable rust or dirt is found, or if the valve seat cannot be moved by hand, clean or replace the cap.

Negative valve opening pressure kPa (psi)	1.96 ~ 4.91 (0.28 ~ 0.71)

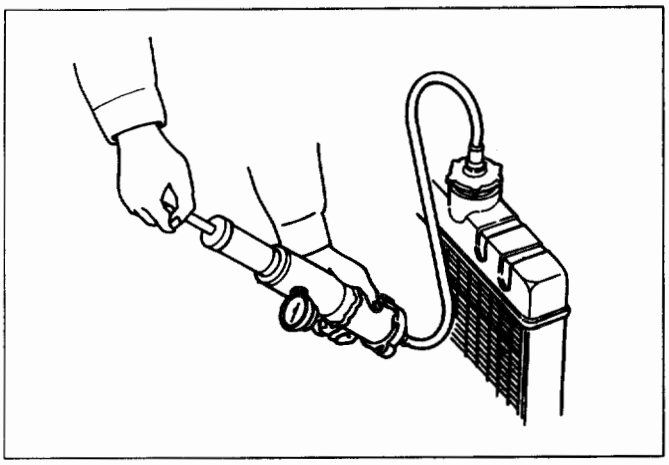

Fig. 6B-14

Radiator Core

1. A bent fin may result in reduced ventilation and overheating may occur. All bent fins must be straightened. Pay close attention to the base of the fin when it is being straightened.
2. Remove all dust, bugs and other foreign material.

Flushing the Radiator

Thoroughly wash the inside of the radiator and the Engine Coolant passages with cold water and mild detergent. Remove all signs of scales and rust.

Cooling System Leakage Check

Use a radiator cap tester to force air into the radiator through the filler neck at the specified pressure of 196 kPa (28.5 psi) with a cap tester:

- Leakage from the radiator
- Leakage from the coolant pump
- Leakage from the water hoses
- Check the rubber hoses for swelling.

Cap tester: J-24460-01
Adapter: J-33984-A

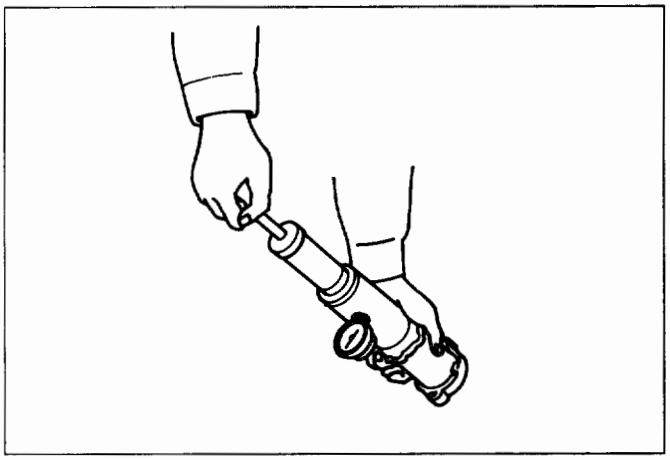

Fig. 6B-15

INSTALLATION

6. Radiator assembly
- Install cushion rubbers on both sides of radiator bottom.
- Install radiator assembly with hose, taking care not to damage the radiator core with a fan blade.

5. Bracket
- Support the radiator upper tank with the bracket and secure the radiator.

4. Reserve tank hose

3. Fan guide, lower

2. Radiator hose
- Connect inlet hose and outlet hose to the engine.

1. Oil cooler hose (A/T)
- Connect oil cooler hose for automatic transmission.
- Connect battery ground cable.
- Pour engine coolant.
- Pour engine coolant up to filler neck of radiator, and up to MAX mark of reserve tank. (Fig. 6B-16)

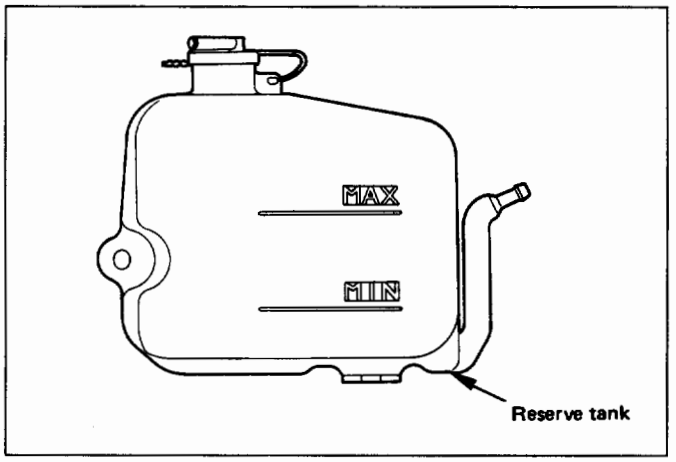

Fig. 6B-16

Important operation (in case of 100% Engine Coolant change) procedure for filling with Engine Coolant
- Fill with Engine Coolant (EC) to the radiator filler neck.
- Fill with EC to the "MAX" line on the reservoir.
- Start the engine with the radiator cap removed and bring to operating temperature by running engine at 2,500 ~ 3,000 revolution per minute for 30 minutes.
- By EC temperature gauge reading make sure that the thermostat is open.
- If air bubbles come up to the radiator filler neck, replenish with EC repeat until the EC level does not drop any further. Install the radiator cap and stop the engine.
- Replenish EC to the "MAX" line on the reservoir and leave as it is until the engine gets cool.
- After the engine gets cool, start the engine and make sure there is no water running noise heard from the heater core while the engine runs at 3000 revolution per minute.
- Should water running noise be heard, repeat the same procedure from the beginning.

DRIVE BELT ADJUSTMENT

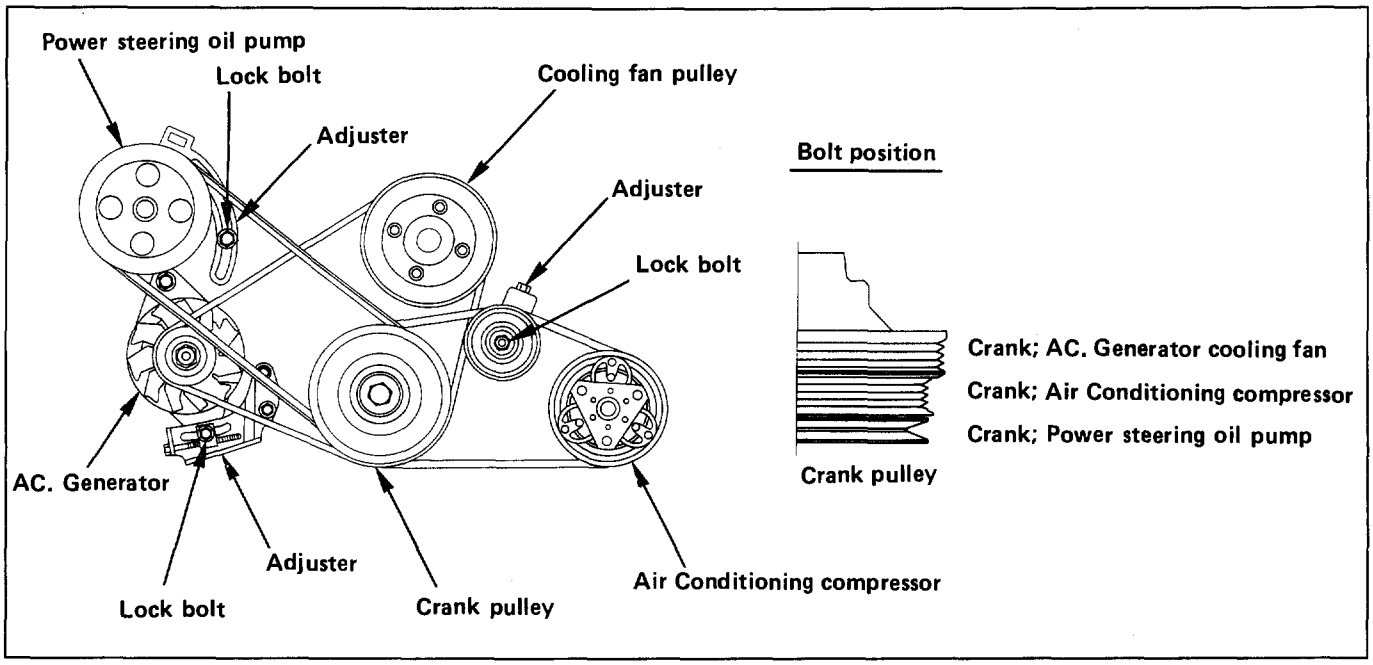

Fig. 6B-17

INSPECTION

Check drive belts for wear or damage, and replace with new ones as necessary. Check belts for tension, and adjust as necessary.

CAUTION:

- Unlike the conventional V-type belt, auto tension belt must use a belt tension gauge, if possible, for its tension adjustment because feel based adjustment may not lead to accurate belt tension.
- Tension readjustment of auto tension belt should be made only once when V-type HM' tension has dropped to 40 lb or less and poly V-type's to 50 lb or less after the vehicle's total running mileage of 621 miles.
- As for air conditioning (A/C) compressor driving belt, it is difficult to use a belt tension gauge.
  Depress belt with 98N (22lb) and make sure that slackness is in the range of 0.315 ~ 0.472 in.

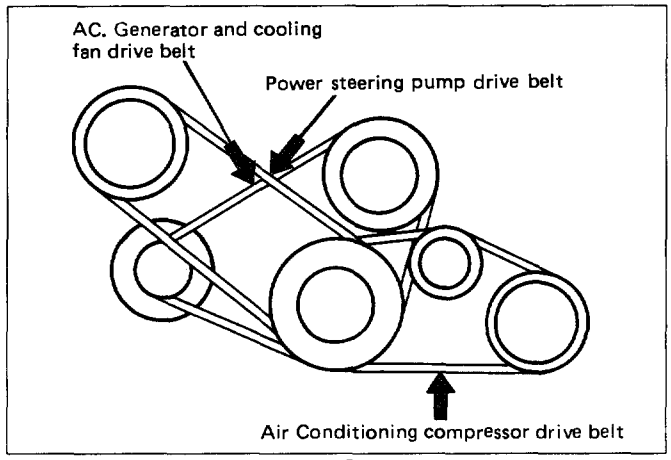

Fig. 6B-18

Belt tension range to be targeted for cold setting. Using a Borrough drive belt tension gauge.

(lb)

	Kind of belt	Initial tension	Tension at readjustment
AC generator & fan pulley drive belt	Poly V type	180 ±10	110 ±10
A/C compressor drive belt	Poly V type	120 ±20	100 ±20
Power steering pump drive belt	V-type HM	90 ±20	

TENSION ADJUSTMENT

- Generator & fan pulley drive belt
  Loosen generator fixing bolt and adjuster lock bolt. Adjust bolt by turning adjust bolt. After installation, tighten lock bolt and fixing bolt to the specified tightening torque
- Fixing bolt

Torque	N·m (lb·ft)	22 (16)

- Lock bolt

Torque	N·m (lb·ft)	24 (17)

- A/C compressor drive belt
  Loosen lock bolt and adjust bolt by turning adjust bolt. After installation tighten lock bolt to the specified tightening torque.

Torque	N·m (lb·ft)	50 (37)

- Power steering oil pump drive belt
  Loosen lock bolt and adjust bolt by turning adjust bolt. After installation tighten lock bolt to the specified tightening torque.

Torque	N·m (lb·ft)	46 (30)

MAIN DATA AND SPECIFICATIONS

		M/T	A/T
Cooling system		Engine Coolant forced circulation	
Radiator		(1 tube in row) Tube type corrugated (2 tube in row)	
Heat radiation capacity	kcal/h	58000	76000
Heat radiation area	m^2 (ft^2)	8.443 (0.785)	15.631 (1.454)
Front area	m^2 (ft^2)	0.309 (0.029)	
Dry weight	kg (lb)	4.2 (9.5)	7.4 (16.3)
Radiator cap			
Valve opening pressure	kPa(psi)	88.2 ~ 117.6 (12.8 ~ 17.0)	
Radiator coolant capacity	lit (U.S q.t.)	2.1 (2.2)	2.4 (2.5)
Engine coolant pump		Centrifugal impeller type	
Delivery	lit(U.S qt)/min	300 (317) or more	
Pump speed	rpm	5000 ± 50	
Thermostat		Wax pellet type with jiggle valve	
Valve opening temperature	°C (°F)	74.5 ~ 78.5 (166.1 ~ 169.7)	
Engine coolant total capacity	lit (U.S qt)	8.5 (9.0)	8.8 (9.3)

TORQUE SPECIFICATIONS

N·m (lb·ft)

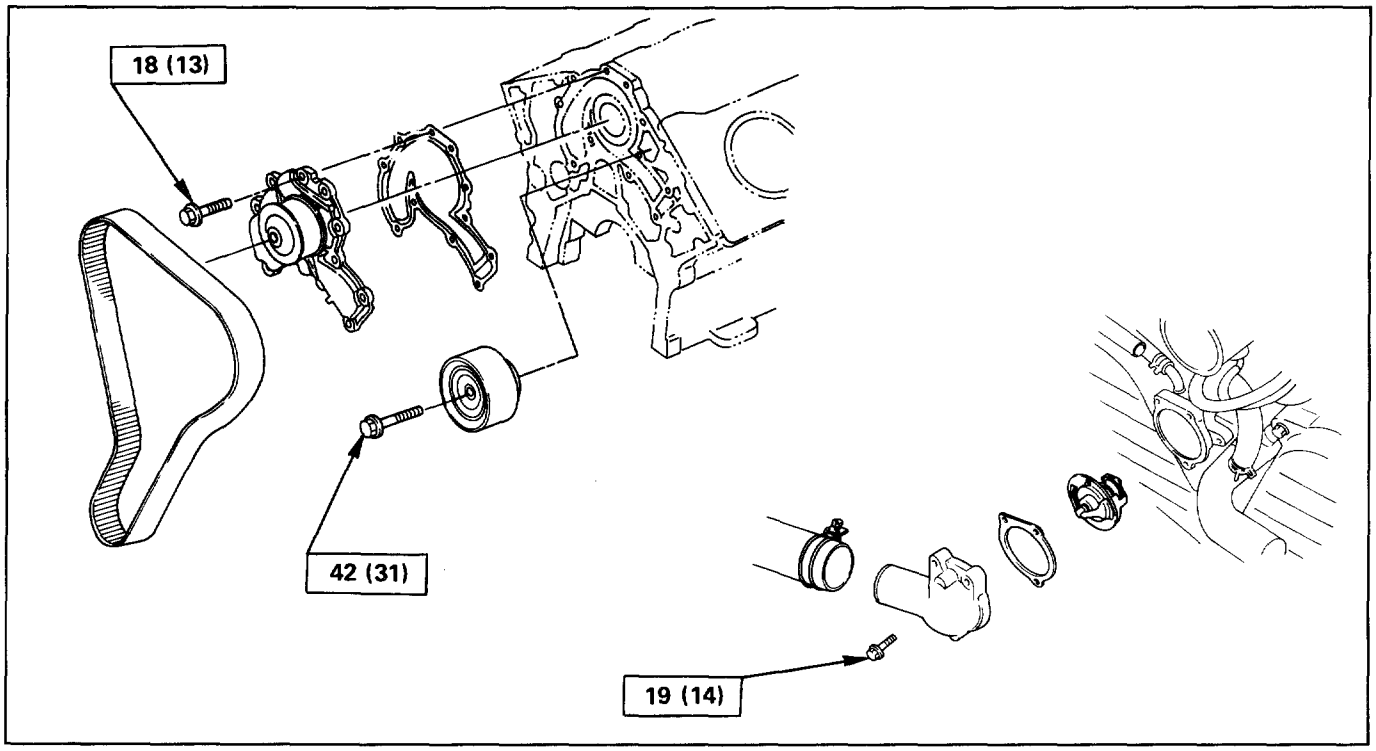

Fig. 6B-18

SPECIAL TOOLS

ILLUSTRATION	**TOOL NO.** TOOL NAME
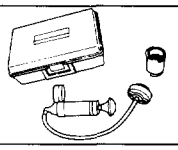	**J-24460-01** Tester; radiator cap
	J-33984-A Adapter: radiator cap

MEMO

SECTION 6C

ENGINE FUEL

CONTENTS

General Description 6C-1
Fuel Metering 6C-2
On-Vehicle Service 6C-3
Fuel Filter 6C-3
In Tank Fuel Filter 6C-4
Fuel Pump Flow Test 6C-4
Fuel Pump Assembly 6C-5
Fuel Pump Relay 6C-5
Fuel Tank 6C-6
Fuel Gage Unit 6C-7
Fuel Filler Cap 6C-7
Accelerator Pedal Control 6C-8
Accelerator Pedal Control Cable .. 6C-8
Accelerator Pedal 6C-9
Air Cleaner Filter 6C-10
Main Data and Specifications 6C-11
Torque Specifications 6C-11

GENERAL DESCRIPTION

When working on the fuel system, there are several things to keep in mind:

- Any time the fuel system is being worked on, disconnect the negative battery cable except for those tests where battery voltage is required.
- Always keep a dry chemical (Class B) fire extinguisher near the work area.
- Replace all pipes with the same pipe and fittings that were removed.
- Clean and inspect "O" rings. Replace if required.
- Always relieve the line pressure before servicing any fuel system components.
- Do not attempt repairs on the fuel system until you have read the instructions and checked the pictures relating to that repair.
- Adhere to all Notices and Cautions.

All gasoline engines are designed to use only unleaded gasoline. Unleaded gasoline must be used for proper emission control system operation. Its use will also minimize spark plug fouling and extend engine oil life. Using leaded gasoline can damage the emission control system and could result in loss of emission warranty coverage.

All cars are equipped with an Evaporative Emission Control System. The purpose of the system is to minimize the escape of fuel vapors to the atmosphere. Information on this system will be found in Section 6E2.

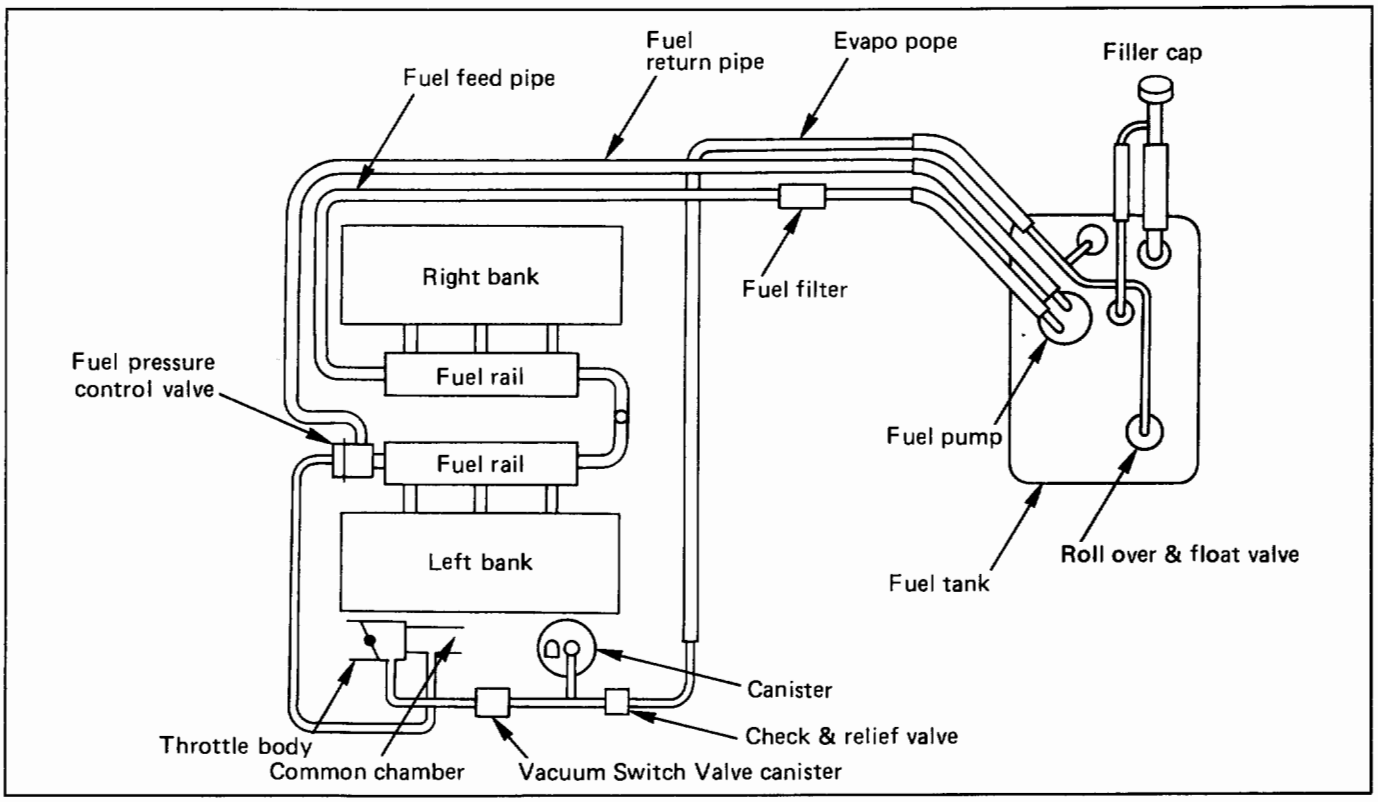

Fig.6C-1

FUEL METERING

The Engine Control Module (ECM) is in complete control of this fuel delivery system during normal driving conditions.

The intake manifold function, like that of a diesel, is used only to let air into the engine. The fuel is injected by separate injectors that are mounted over the intake manifold.

The Manifold Absolute Pressure (MAP) sensor measures the changes in the intake manifold pressure which result from engine load and speed changes, which the MAP sensor converts to a voltage output. This sensor generates the voltage to change corresponding to the flow of the air drawn into the engine. The changing voltage is transformed into an electric signal and provided to the ECM.

With receipt of the signals sent from the MAP sensor, Intake Air Temperature sensor and others, the ECM determines an appropriate fuel injection pulse width feeding such information to the fuel injector valves to effect an appropriate air/fuel ratio.

The Multiport Fuel Injection system utilizes an injection system where the injectors turn on at every crankshaft revolution. The ECM controls the injector on time so that the correct amount of fuel is metered depending on driving conditions.

Two interchangeable "O" rings are used on the injector that must be replaced when the injectors are removed.

The fuel rail is attached to the top of the intake manifold and supplies fuel to all the injectors.

Fuel is recirculated through the rail continually while the engine is running. This removes air and vapors from the fuel as well as keeping the fuel cool during hot weather operation.

The fuel pressure control valve that is mounted on the fuel rail maintains a pressure differential across the injectors under all operating conditions. It is accomplished by controlling the amount of fuel that is recirculated back to the fuel tank based on engine demand.

See Section 6E2 for more information and diagnosis.

ON-VEHICLE SERVICE

When repair to the fuel system has been completed, start engine and check the fuel system for loose connection or leakage. For the fuel system diagnosis, see Section 6E.

FUEL FILTER

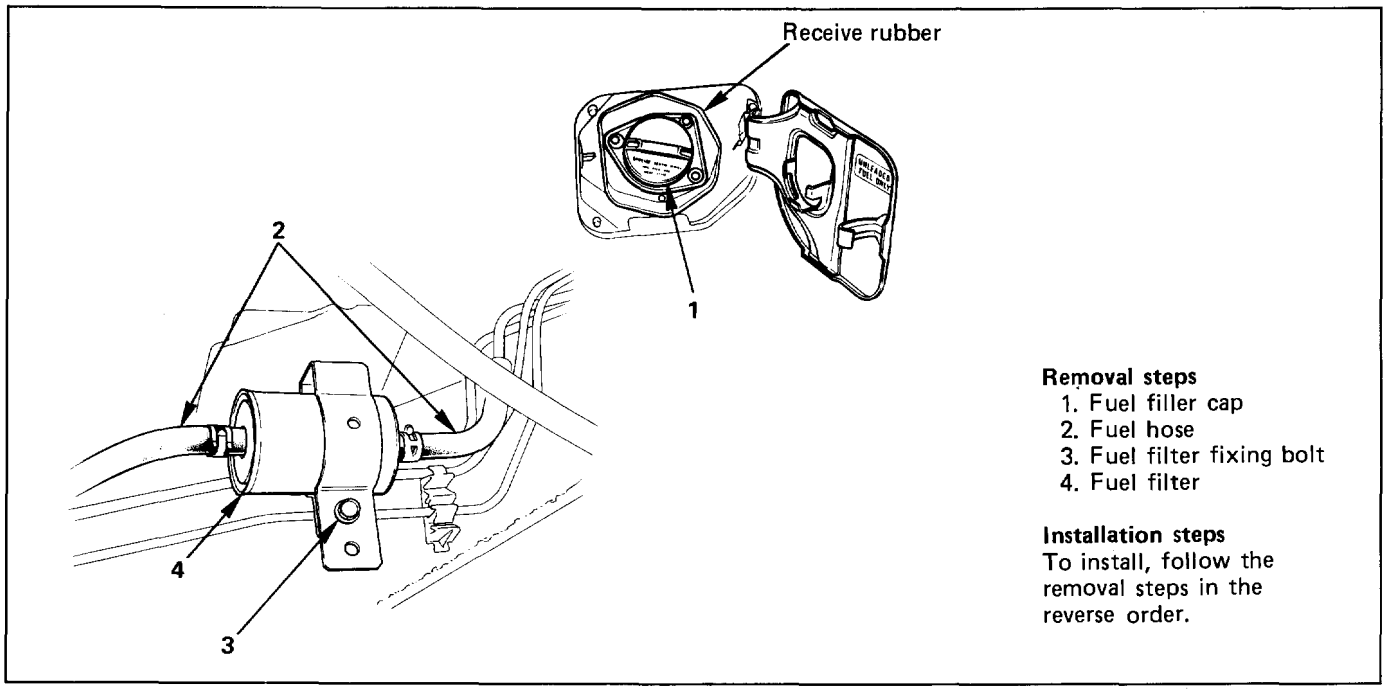

Fig. 6C-2

REMOVAL

Preparation:

- Disconnect battery ground cable.

1. **Fuel filler cap**
2. **Fuel hose**
   - Disconnect fuel hoses from fuel filter on both engine side and fuel tank side.
3. **Fuel filter fixing bolt**
   - Remove the bolt on fuel filter holder.
4. **Fuel filter**

INSPECTION

1. Replace the fuel filter if the fuel leaks from fuel filter body or if the fuel filter body itself is damaged.
2. Replace the filter if it is clogged with dirt or sediment.
3. Check the drain of receive rubber and if it is clogged with dust, clean it up with air.

INSTALLATION

4. **Fuel filter**
   - Install the filter in the proper direction. (Fig.6C-3)

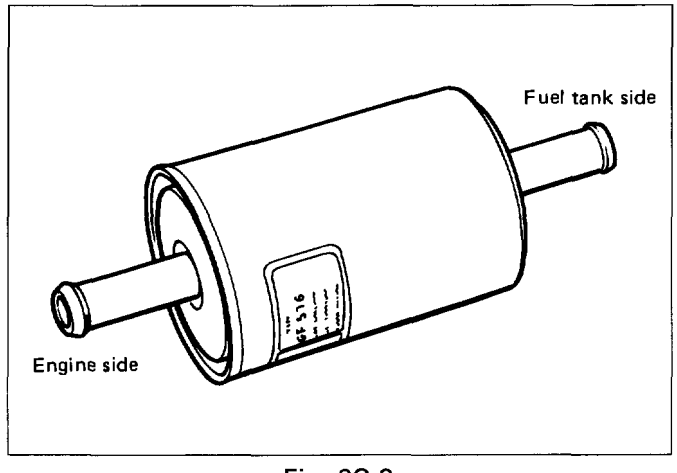

Fig. 6C-3

3. **Fuel filter holder fixing bolt.**
2. **Fuel hose**
   - Connect hoses on engine side and fuel tank side.
1. **Fuel filler cap**
   - Connect the battery ground cable.

INSPECTION

After installation, start engine and check for fuel leakage.

IN-TANK FUEL FILTER

The filter is located on the lower end of fuel pickup tube in the fuel tank. It prevents dirt from entering the fuel pipe and also stops water unless the filter is completely submerged in the water. It is a self-cleaning type, not requiring scheduled maintenance. Excess water and sediment in the tank restricts fuel supply to the engine, resulting in engine stop. In such a case, the tank must be cleaned throughly.

FUEL PUMP FLOW TEST

If reduction of fuel supply is suspected, perform checking as follows.

Preparation:

- Make sure that there is fuel in the tank.
- With the engine running, check the fuel feed pipe and hose from fuel tank to injector for evidence of leakage.
  Retighten, if pipe or hose connection is loose. Also, check pipes and hoses for squashing or clogging.

1. Receive the hose from fuel feed pipe with a clean container, and check for fuel pump flow rate.
2. Connect the pump relay terminals with a jumper wire as shown and start the fuel pump to measure delivery. (Fig. 6C-4)

CAUTION:

Never generate sparks when connecting a jumper wire.

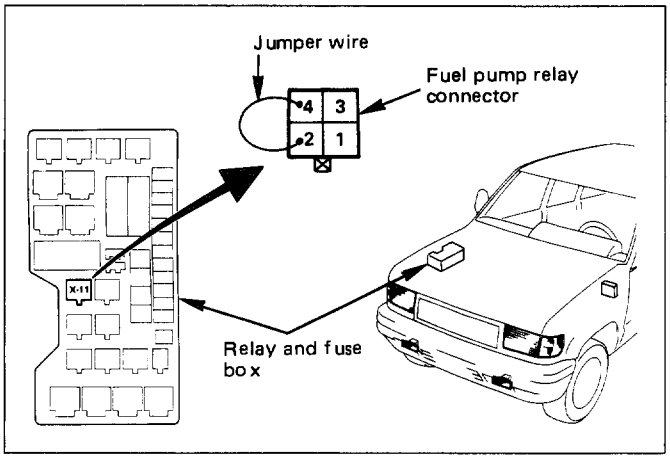

Fig. 6C-4

Delivery	Delivery
15 seconds	0.38 liters minimum

If the measure value is out of standard, conduct the pressure test.

Pressure test

For the pressure test to the fuel system, see Section 6E "Fuel Control System".

FUEL PUMP ASSEMBLY

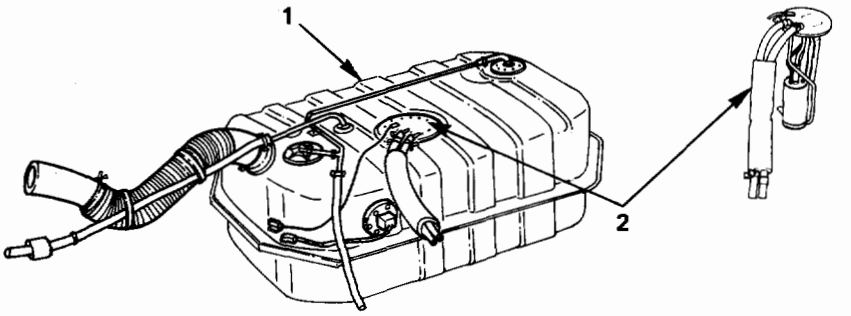

Removal steps
1. Fuel tank assembly
2. Fuel pump assembly

Installation steps
To install, follow the removal steps in the reverse order.

Fig. 6C-5

REMOVAL

Preparation:
- Disconnect battery ground cable.
- Loosen fuel filler cap.
- Drain fuel.

Tighten drain plug to the specified torque after draining fuel.

Torque	N·m (lb·ft)	20 (14) – M8 29 (22) – M14

1. **Fuel tank assembly**
   - See "Fuel tank removal" in this section.
2. **Fuel pump (FP) assembly**
   - Remove FP assembly fixing screws and remove the FP assembly.

NOTE:
- After removing FP, cover fuel tank to prevent any dust entering.

INSTALLATION

2. **FP assembly**
1. **Fuel tank assembly**
   - See "Fuel tank installation".
   - Fill the tank with fuel and tighten fuel filler cap.
   - Connect battery ground cable.

FUEL PUMP RELAY

In order to control the FP operation, the FP relay is provided. When the starter switch is turned to "ON" position, the FP relay operates the FP for 2 seconds. When it is turned to "START" position, the Engine Control Module receives the reference pulse from the Ignition Control module and it operates the relay, again causing the FP to feed fuel.

FUEL TANK

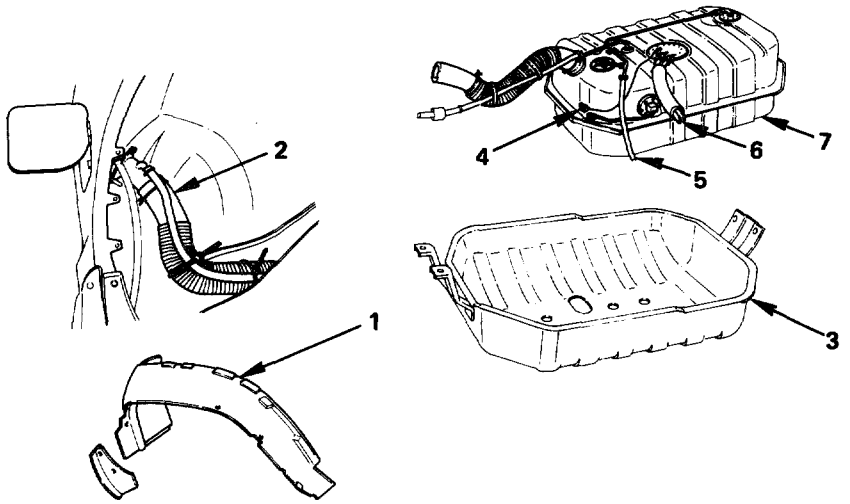

Removal steps
1. Inner liner
2. Fuel filler hose and breather hose
3. Under cover
4. Fuel tank wiring connector
5. Evapo fuel hose
6. Fuel hose and fuel return hose
7. Fuel tank

Installation steps
To install, follow the removal steps in the reverse order.

Fig. 6C-6

REMOVAL

Preparation:
- Disconnect battery ground cable.
- Loosen fuel filler cap.
- Drain fuel.
  Tighten drain plug to the specified torque after draining fuel.

Torque	N·m (lb·ft)	20 (14) – M8 29 (22) – M14

1. **Inner liner**
   - Remove inner liner of wheel arch on rear right side.
2. **Fuel filler hose and air breather hose**
3. **Undercover**
   - Remove undercover fixing bolts on both sides.
4. **Fuel tank wiring connector**
   - Disconnect two connectors on front right side of tank.
5. **Evapo fuel hose**
6. **Fuel hose and fuel return hose**

NOTE:
- Cover fuel hose to prevent any dust entering

7. **Fuel tank**
   - Remove fuel tank fixing bolts on both sides.

INSTALLATION

7. **Fuel tank**
   - Place a flange on right side of tank on the bracket.
   - Install a flange on left side on the bracket from the bottom, and tighten bolts to the specified torque.
6. **Fuel hose and fuel return hose**

Torque	N·m (lb·ft)	36 (27)

5. **Evapo fuel hose**
4. **Fuel tank wiring connector**
3. **Undercover**
2. **Fuel filler hose and air breather hose**
1. **Inner liner**
   - Mount inner liner on the wheel arch.
   - Fill the tank with fuel and tighten fuel filler cap.
   - Connect battery ground cable.

FUEL GAGE UNIT

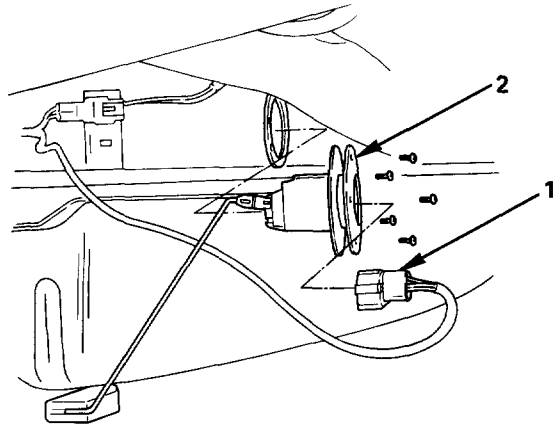

Removal steps
1. Wiring connector
2. Fuel gauge unit

Installation steps
To install, follow the removal steps in the reverse order.

Fig. 6C-7

REMOVAL

Preparation:
- Disconnect battery ground cable.
- Loosen fuel filler cap.
- Drain fuel.
  Tighten drain plug to the specified torque after draining fuel.

Torque	N·m (lb·ft)	20 (14) – M8 29 (22) – M14

1. **Wiring connector**
   - Disconnect wiring connector from the unit.
2. **Fuel gage unit**
   - Remove the fixing screws, then the fuel gage unit.

NOTE:
- After removing fuel gauge unit, cover fuel tank to prevent any dust entering

INSTALLATION

2. **Fuel gage unit**
1. **Wiring connector**
   - Connect the wiring connector to the fuel gage unit.
   - Fill the tank with fuel and tighten fuel filler cap.
   - Connect battery ground cable.

FUEL FILLER CAP

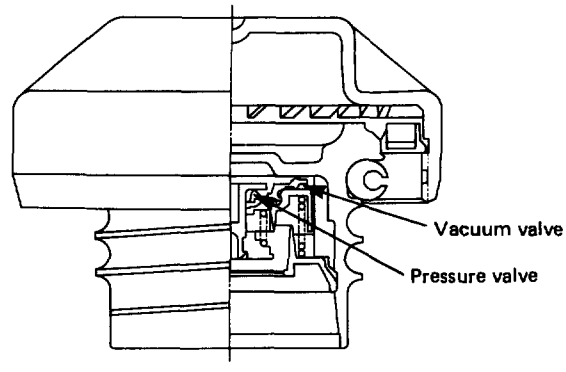

Fig. 6C-8

Fuel filler cap includes vacuum valve and pressure valve.

In case any high vacuum and any high pressure happen in tank, each valve works to adjust the pressure to prevent the tank from being damaged.

INSPECTION

Check the seal ring in the filler cap for presence of any abnormality and for seal condition.
Replace the filler cap, if abnormal.

CAUTION

Valves of fuel filler cap have characteristics.
As any defective valve, no valve or any wrong characteristic valve will do a lot of harm to engine condition, be sure to use the same fuel filler cap as installed in this vehicle.

ACCELERATOR PEDAL CONTROL

ACCELERATOR PEDAL CONTROL CABLE

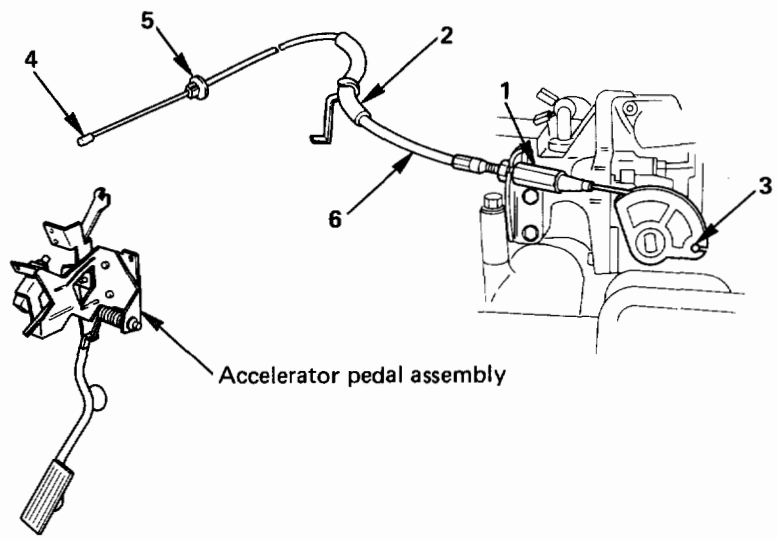

Removal steps
1. Adjusting nut
2. Cable clip
3. Accelerator Pedal (AP) control cable (Throttle valve side)
4. AP control cable (AP pedal side)
5. Grommet
6. AP control cable

Installation steps
To install, follow the removal steps in the reverse order.

Fig. 6C-9

REMOVAL

1. **Adjusting nut**
   - Loosen the adjust nut on the cable bracket mounted on the common chamber.
2. **Cable clip**
3. **Accelerator pedal (AP) control cable (on throttle valve side)**
4. **AP control cable (on AP pedal side)**
5. **Grommet**
6. **AP control cable**

INSPECTION

Check the following items, and replace the control cable if any abnormality is found.
- The control cable should move smoothly.
- The control cable should not be bent or kinked.
- The control cable should be free of damage and corrosion.

INSTALLATION

6. **AP control cable**
5. **Grommet**
4. **AP control cable (on AP side)**
3. **AP control cable (on throttle valve side)**
2. **Cable clip**
1. **Adjusting nut**

Adjustment of AP control cable
1. Loosen the adjusting nut.
2. Lock the throttle valve to fully closed status, and pull the outer cable. Then, adjust the nut B so that the clearance between nut B and bracket is as shown in Fig. 6C-10.
3. Push the nut B against the bracket and tighten nut A to lock the cable.

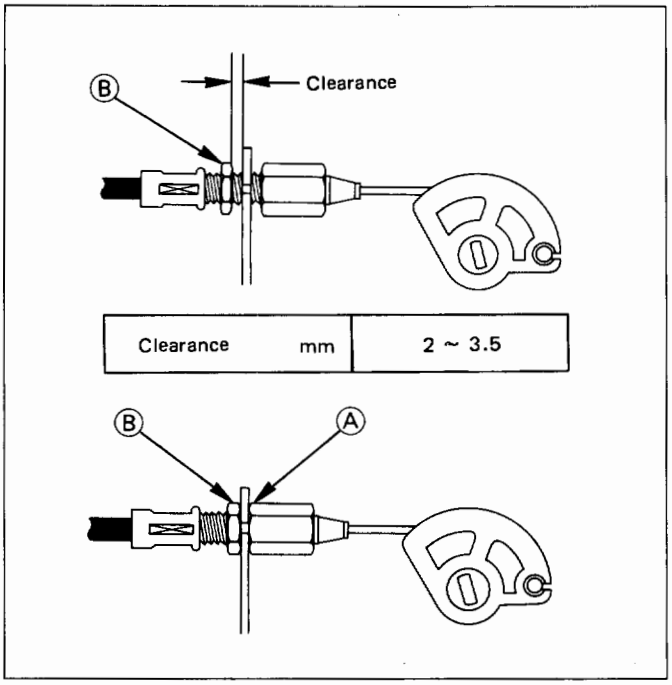

Fig. 6C-10

ACCELERATOR PEDAL

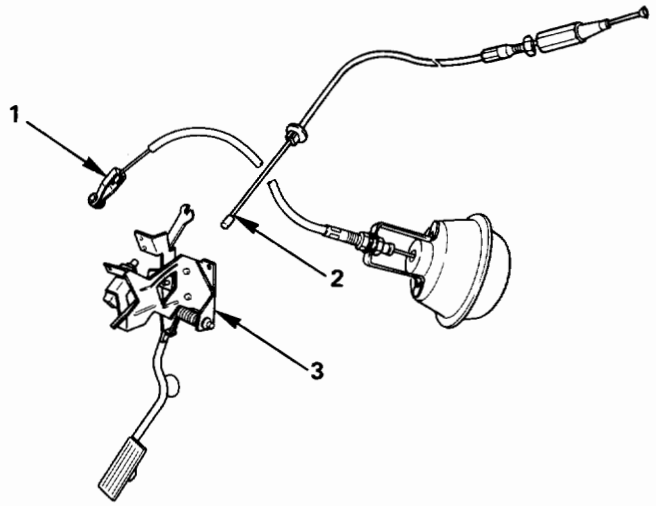

Removal steps
1. Auto cruise control cable
2. Accelerator Pedal control cable
3. Accelerator Pedal assembly

Installation steps
To install, follow the removal steps in the reverse order.

Fig. 6C-11

REMOVAL

1. **Automatic cruise control cable**
2. **Accelerator Pedal control cable**
3. **Accelerator Pedal assembly**

INSTALLATION

3. **Accelerator pedal assembly**
2. **Accelerator Pedal control cable**
1. **Automatic cruise control cable**

Adjustment of pedal stroke

Manual Transmission:

- Rotate counterclockwise to loosen the stopper bolt sufficiently.
- Fully depress the pedal and hold it there hand. Next, rotate the stopper bolt until it hits the stopper of pedal bracket. Then, lock the stopper bolt there.

Automatic Transmission:

- Rotate counterclockwise to loosen the kickdown switch sufficiently.
- Fully depress the pedal and hold it there hand. Rotate the switch clockwise and then rotate further by 1/2 turn from the position where the switch clicks. Lock the switch there.
- Step on the accelerator pedal and make sure that you can hear clicking sound at the full stroke position.

AIR CLEANER FILTER

REMOVAL

1. **Air hose**
2. **Air cleaner cover**
3. **Air Cleaner Filter**
   (Fig.6C-12), (Fig.6C-13)

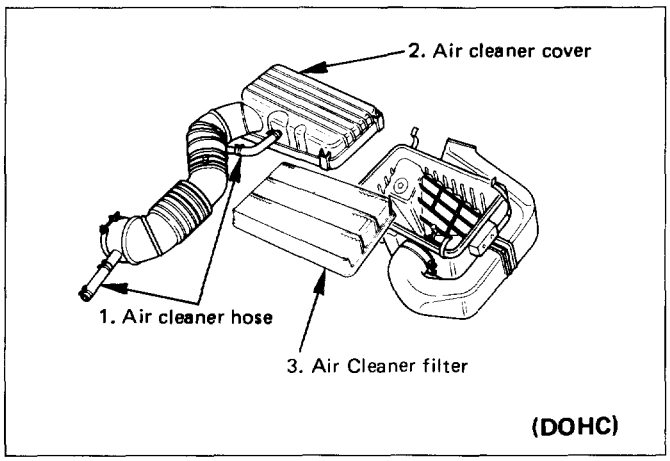

Fig. 6C-12

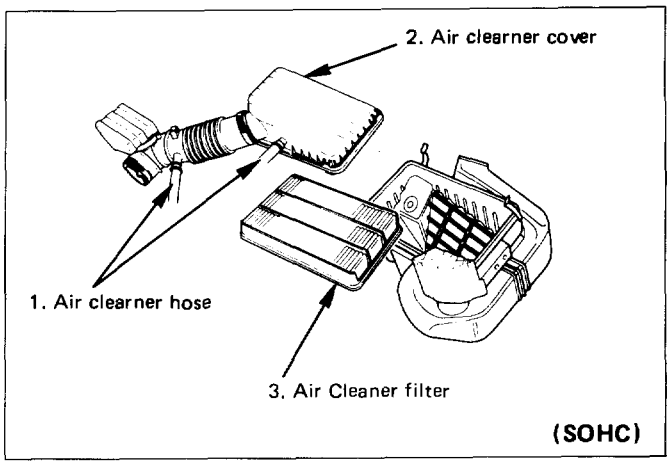

Fig. 6C-13

INSPECTION

Check the Air Cleaner filter for damage or dust clogging. Replace if it is damaged, or clean if it is clogged.

Cleaning method

Hit the Air Cleaner filter gently with care not to damage the paper filter, or clean the element by blowing with compressed air of about 49kPa (71 psi) from the clean side if it is extremely dirty.

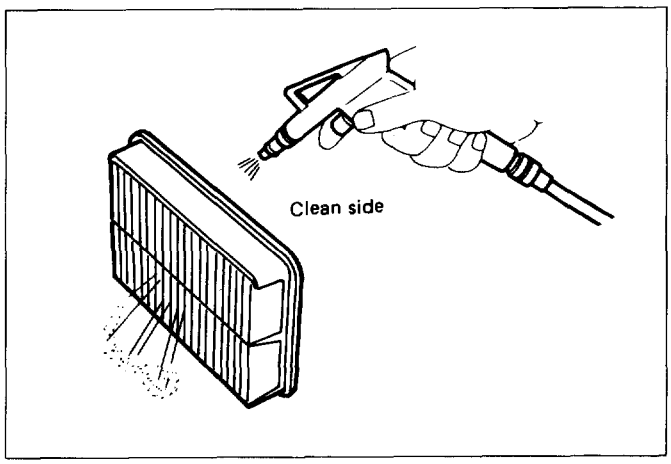

Fig. 6C-14

INSTALLATION

3. **Air Cleaner filter**
2. **Air cleaner cover**
   - Meet the cover to the body completely, then clamp it with the clip.
1. **Air cleaner hose**

MAIN DATA AND SPECIFICATIONS

TORQUE SPECIFICATIONS

N·m (lb·ft)

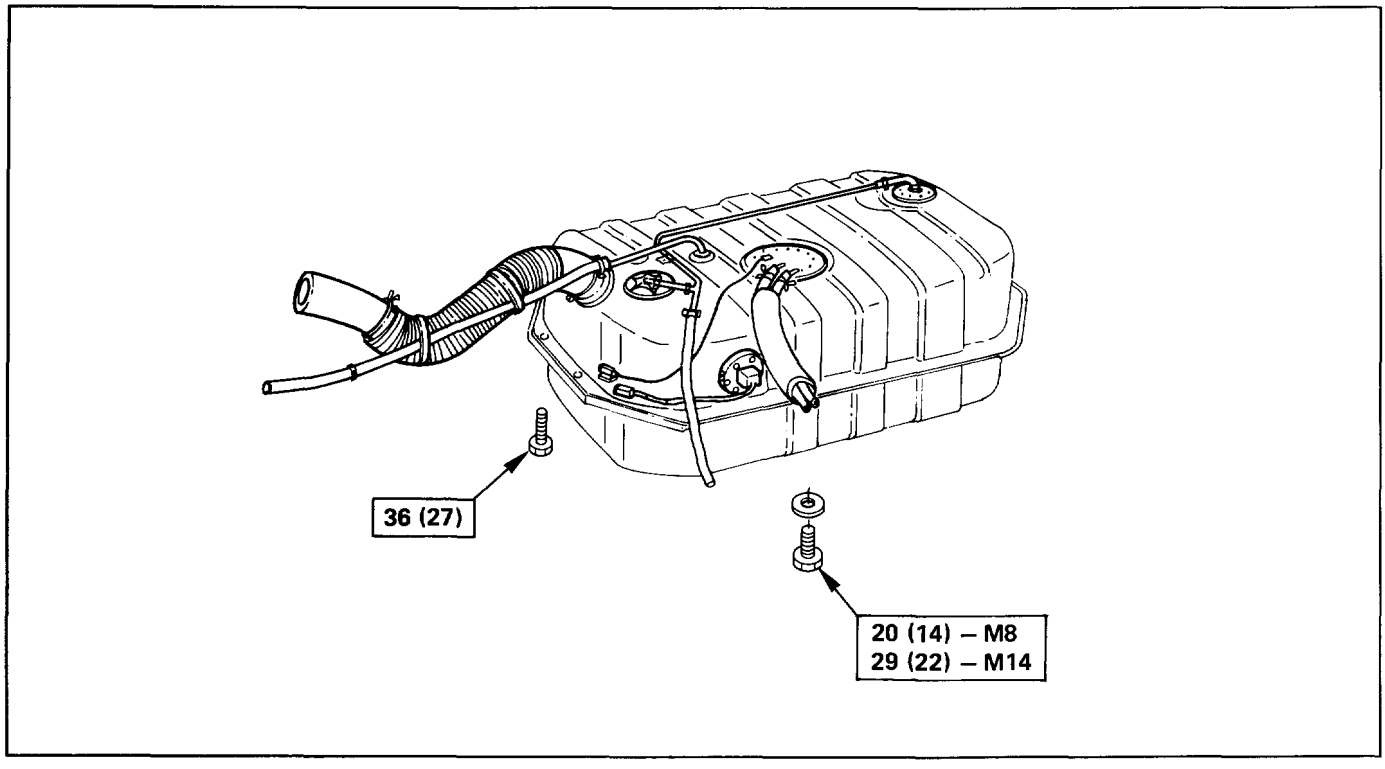

Fig. 6C-15

MEMO

SECTION 6D

ENGINE ELECTRICAL

CONTENTS

Battery ..... Section 6D1
Cranking System ..... Section 6D2
Charging System ..... Section 6D3
Ignition System (V6 3.2L) ..... Section 6D4A

SECTION 6D1

BATTERY

CONTENTS

General Description ..... 6D1—1
Diagnosis ..... 6D1—1
On-Vehicle Service ..... 6D1—3
Battery Charging ..... 6D1—3
Jump Starting ..... 6D1—3
Removal and Installation of The Battery .. 6D1—4
Main Data and Specifications ..... 6D1—4

GENERAL DESCRIPTION

There are six battery fluid caps at the top of the battery. These are covered by a paper label.
The battery is completely sealed except for the six small vent holes at the side. These vent holes permit the escape of small amounts of gas generated by the battery.
This type of battery has the following advantages over conventional batteries:

1. There is no need to add water during the entire service life of the battery.
2. The battery protects itself against overcharging. The battery will refuse to accept an excessive charge.
   (A conventional battery will accept an excessive charge, resulting in gassing and loss of battery fluid.)
3. The battery is much less vulnerable to self-discharge than a conventional type battery.

DIAGNOSIS

1. VISUAL INSPECTION

Inspect the battery for obvious physical damage, such as a cracked or broken case, which would permit electrolyte loss.
Replace the battery if obvious physical damage is discovered during inspection.
Check for any other physical damage and correct it as necessary. If not, proceed to Step 2.

2. HYDROMETER CHECK

There is a built-in hydrometer (Charge test indicator) at the top of the battery. It is designed to be used during diagnostic procedures.

Before trying to read the hydrometer, carefully clean the upper battery surface.
If your work area is poorly lit, additional light may be necessary to read the hydrometer (Fig. 6D1-1).

a. BLUE RING OR DOT VISIBLE — Go to Step 4.
b. BLUE RING OR DOT NOT VISIBLE — Go to Step 3.

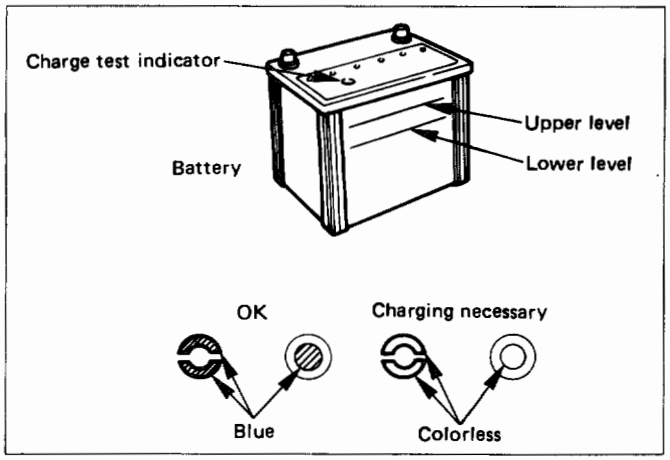

Fig. 6D1-1

3. FLUID LEVEL CHECK

The fluid level should be between the upper level line and lower level line on side of the battery (Fig. 6D1-1).

a. CORRECT FLUID LEVEL — Charge the battery.
b. BELOW LOWER LEVEL — Replace battery.

4. VOLTAGE CHECK

(1) Put voltmeter test leads to battery terminals.
   a. VOLTAGE IS 12.4V OR ABOVE — Go to Step 5.
   b. VOLTAGE IS UNDER 12.4V — Go to procedure (2) below.
(2) Determine fast charge amperage from specification. (See Main Data and Specifications in this section).
   Fast charge battery for 30 minutes at amperage rate no higher than specified value.
   Take voltage and amperage readings after charge.
   a. VOLTAGE IS ABOVE 16V AT BELOW 1/3 OF AMPERAGE RATE — Replace battery.
   b. VOLTAGE IS ABOVE 16V AT ABOVE 1/3 OF AMPERAGE RATE — Drop charging voltage to 15V and charge for 10 - 15 hours.
   Then go to Step 5.
   c. VOLTAGE IS BETWEEN 12V AND 16V — Continue charging at the same rate for an additional 3-1/2 hours. Then go to Step 5.
   d. VOLTAGE IS BELOW 12V — Replace battery.

5. LOAD TEST

(1) Connect a voltmeter and a battery load tester across the battery terminals.
(2) Apply 300 ampere load for 15 seconds to remove surface charge from the battery.
   Remove load.
(3) Wait 15 seconds to let battery recover. Then apply specified load from specifications (See Main Data and Specifications in this section).
   Read voltage after 15 seconds, then remove load.
   a. VOLTAGE DOES NOT DROP BELOW THE MINIMUM LISTED IN Fig. 6D1-2 — The battery is good and should be returned to service.
   b. VOLTAGE IS LESS THAN MINIMUM LISTED — Replace battery.

ESTIMATED TEMPERATURE		MINIMUM VOLTAGE
°F	°C	
70	21	9.6
60	16	9.5
50	10	9.4
40	4	9.3
30	−1	9.1
20	−7	8.9
10	−12	8.7
0	−18	8.5

The battery temperature must be estimated by feel and by the temperature the battery has been exposed to for the preceding few hours.

Fig. 6D1-2

ON-VEHICLE SERVICE

BATTERY CHARGING

Observe the following safety precautions when charging the battery:

1. Never attempt to charge the battery when the fluid level is below the lower level line on the side of the battery. In this case, the battery must be replaced.
2. Pay close attention to the battery during the charging procedure.
   Battery charging should be discontinued or the rate of charge reduced if the battery feels hot to the touch.
   Battery charging should be discontinued or the rate of charge reduced if the battery begins to gas or spew electrolyte from the vent holes.
3. In order to more easily view the hydrometer blue dot or ring, it may be necessary to jiggle or tilt the battery.
4. Battery temperature can have a great effect on battery charging capacity.
5. The sealed battery used on this vehicle may be either quick-charged or slow-charged in the same manner as other batteries.
   Whichever method you decide to use, be sure that you completely charge the battery. Never partially charge the battery.

JUMP STARTING

JUMP STARTING WITH AN AUXILIARY (BOOSTER) BATTERY

CAUTION:
Never push or tow the vehicle in an attempt to start it. Serious damage to the emission system as well as other vehicle parts will result.
Treat both the discharged battery and the booster battery with great care when using jumper cables. Carefully follow the jump starting procedure, being careful at all times to avoid sparking.

WARNING:
Failure to carefully follow the jump starting procedure could result in the following:
1. Serious personal injury, particulaly to your eyes.
2. Property damage from a battery explosion, battery acid, or an electrical fire.
3. Damage to the electronic components of one or both vehicles particularly.

Never expose the battery to an open flame or electrical spark. Gas generated by the battery may catch fire or explode.
Remove any rings, watches, or other jewelry before working around the battery. Protect your eyes by wearing an approved set of goggles.
Never allow battery fluid to come in contact with your eyes or skin.
Never allow battery fluid to come in contact with fabrics or painted surfaces.
Battery fluid is a highly corrosive acid.
Should battery fluid come in contact with your eyes, skin, fabric, or a painted surface, immediately and thoroughly rinse the affected area with clean tap water.
Never allow metal tools or jumper cables to come in contact with the positive battery terminal, or any other metal surface of the vehicle. This will protect against a short circuit.
Always keep batteries out of the reach of young children.

JUMP STARTING PROCEDURE

1. Set the vehicle parking brake.
   If the vehicle is equipped with an automatic transmission, place the selector lever in the "PARK" position.
   If the vehicle is equipped with a manual transmission place the shift lever in the "NEUTRAL" position.
   Turn "OFF" the ignition.
   Turn "OFF" all lights and any other accessory requiring electrical power.
2. Look at the built-in hydrometer.
   If the indication area of the built-in hydrometer is completely clear, do not try to jump start.
3. Attach the end of one jumper cable to the positive terminal of the booster battery.
   Attach the other end of the same cable to the positive terminal of the discharged battery.
   Do not allow the vehicles to touch each other. This will cause a ground connection, effectively neutralizing the charging procedure.
   Be sure that the booster battery has a 12 volt rating.
4. Attach one end of the remaining cable to the negative terminal of the booster battery.
   Attach the other end of the same cable to a solid engine ground (such as the air conditioning compressor bracket or the generator mounting bracket) of the vehicle with the discharged battery.
   This ground connection must be at least 450 mm (18 in) from the battery of the vehicle whose battery is being charged.

WARNING:
Never attach the end of the jumper cable directly to the negative terminal of the dead battery.

5. Start the engine of the vehicle with the good battery.
   Make sure that all unnecessary electrical accessories have been turned "OFF".
6. Start the engine of the vehicle with the dead battery.
7. To remove the jumper cables, follow the above directions in the reverse order.
   Be sure to first disconnect the negative cable from the vehicle with the discharged battery.

REMOVAL AND INSTALLATION OF THE BATTERY

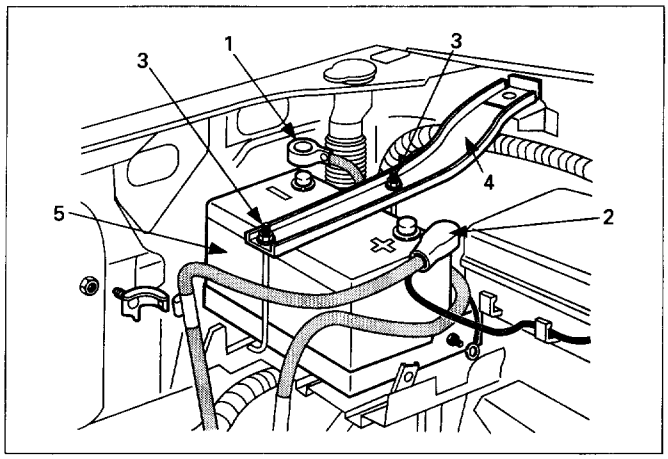

Fig. 6D1-3

REMOVAL

1. **Negative cable**
2. **Positive cable**
3. **Retainer screw and rods**
4. **Retainer**
5. **Battery**

INSTALLATION

To install the battery, follow the removal procedure in the reverse order, noting the following points:

1. Make sure that the rod is hooked on the body side.

MAIN DATA AND SPECIFICATIONS

Model	(JIS)	95D31R–MF	80D26R–MF	75D26R–MF
Voltage	(V)	12	12	12
Cold-Cranking Performance	(Amp)	622	582	490
Reserve Capacity	(Min.)	159	133	123
Load Test	(Amp)	310	290	245
Fast Charge Maximum Amperage	(Amp)	20	20	20
BCI Group No.		27	24	24

SECTION 6D2

CRANKING SYSTEM

CONTENTS

General Description 6D2-1
Diagnosis 6D2-3
On-Vehicle Service 6D2-8
Unit Repair 6D2-9
Main Data and Specifications 6D2-17
Torque Specifications 6D2-18

GENERAL DESCRIPTION

CRANKING CIRCUIT

The cranking system consists of a battery, starter, starter switch, starter relay, etc. and these main components are connected as shown in Fig. 6D2-1. For details of the cranking circuit, see Fig. 6D2-2.

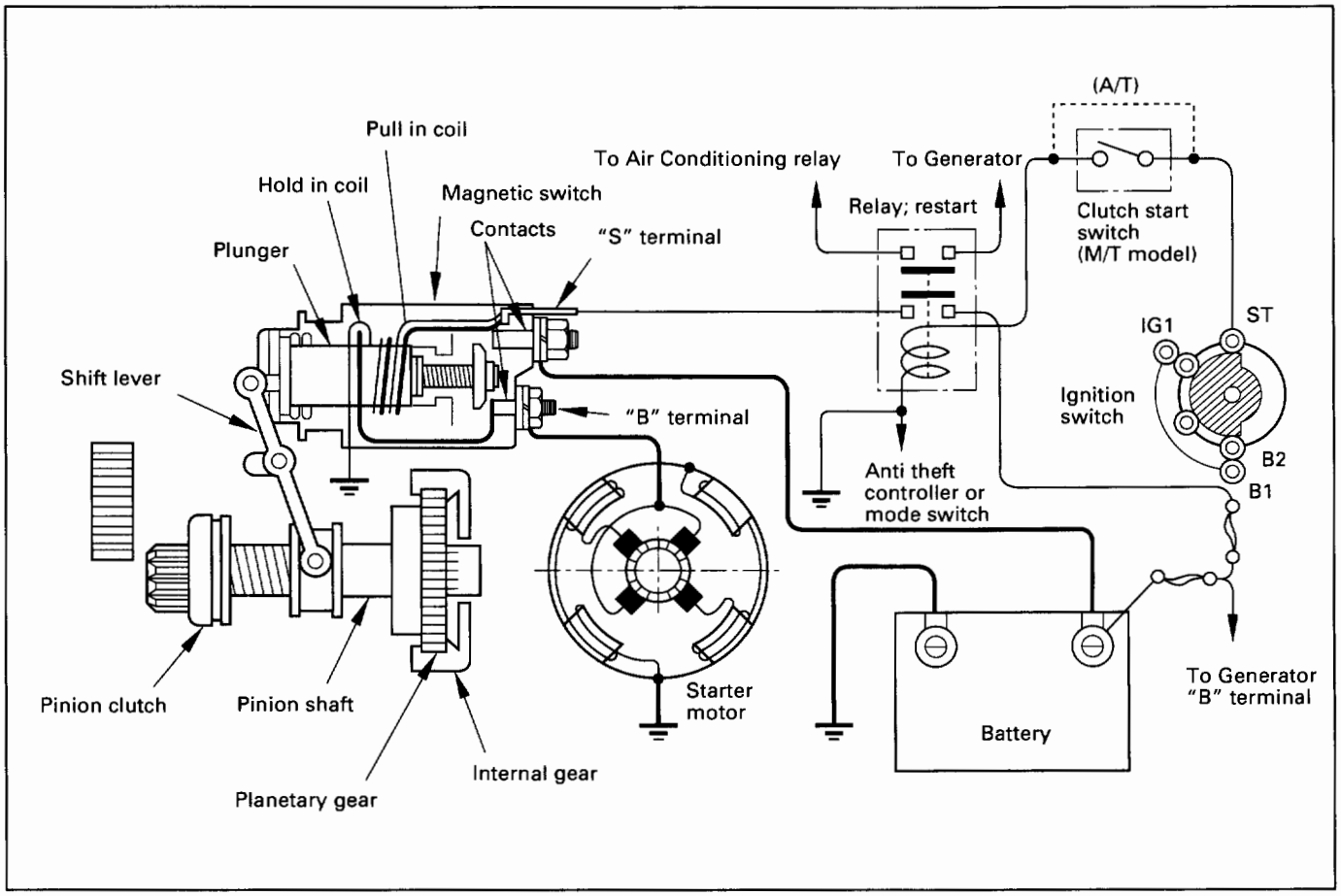

Fig. 6D2-1

STARTER

The cranking system employs a magnetic type reduction starter in which the motor shaft is also used as a pinion shaft. When the starter switch is turned on, the contacts of magnetic switch are closed, and the armature rotates. At the same time, the plunger is attracted, and the pinion is pushed forward by the shift lever to mesh with ring gear. Then, the ring gear runs to start the engine. When the engine starts and the starter switch is turned off, the plunger returns, the pinion is disengaged from ring gear, and the armature stops rotation. When the engine speed is higher than the pinion, the pinion idles, so that the armature is not driven.

CRANKING CIRCUIT

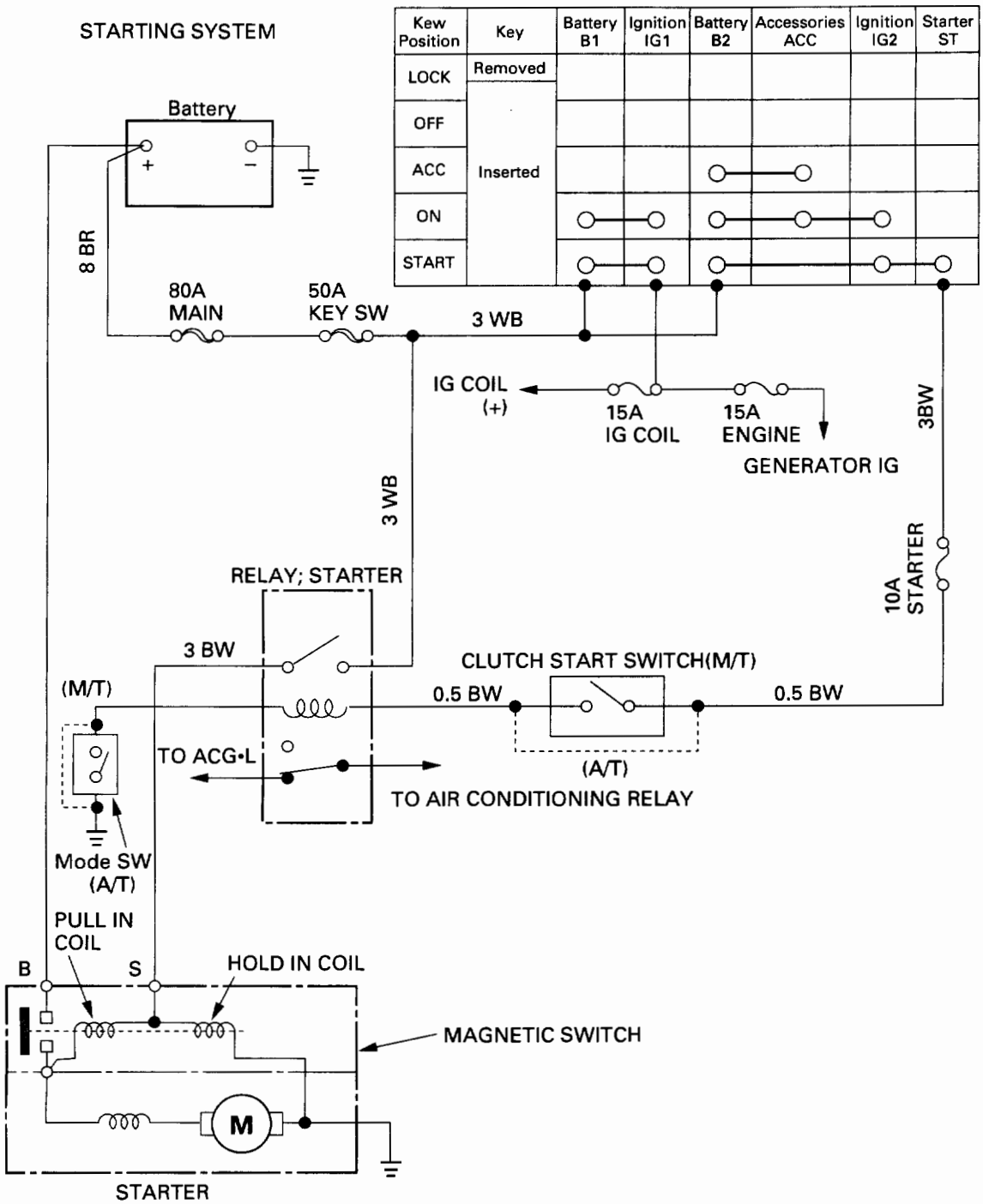

Fig. 6D2-2

DIAGNOSIS

Check if the battery is normal, then perform the following diagnosis.

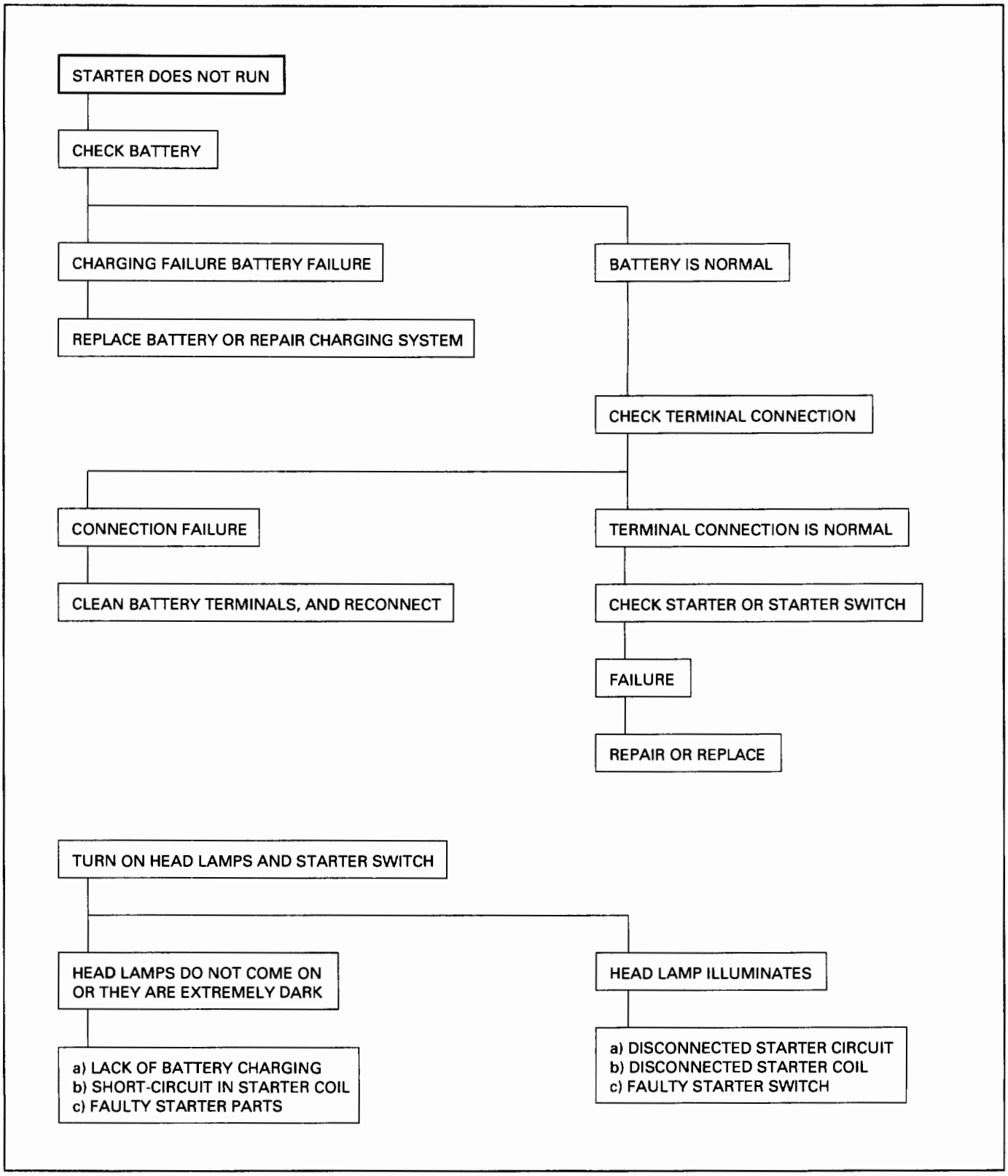

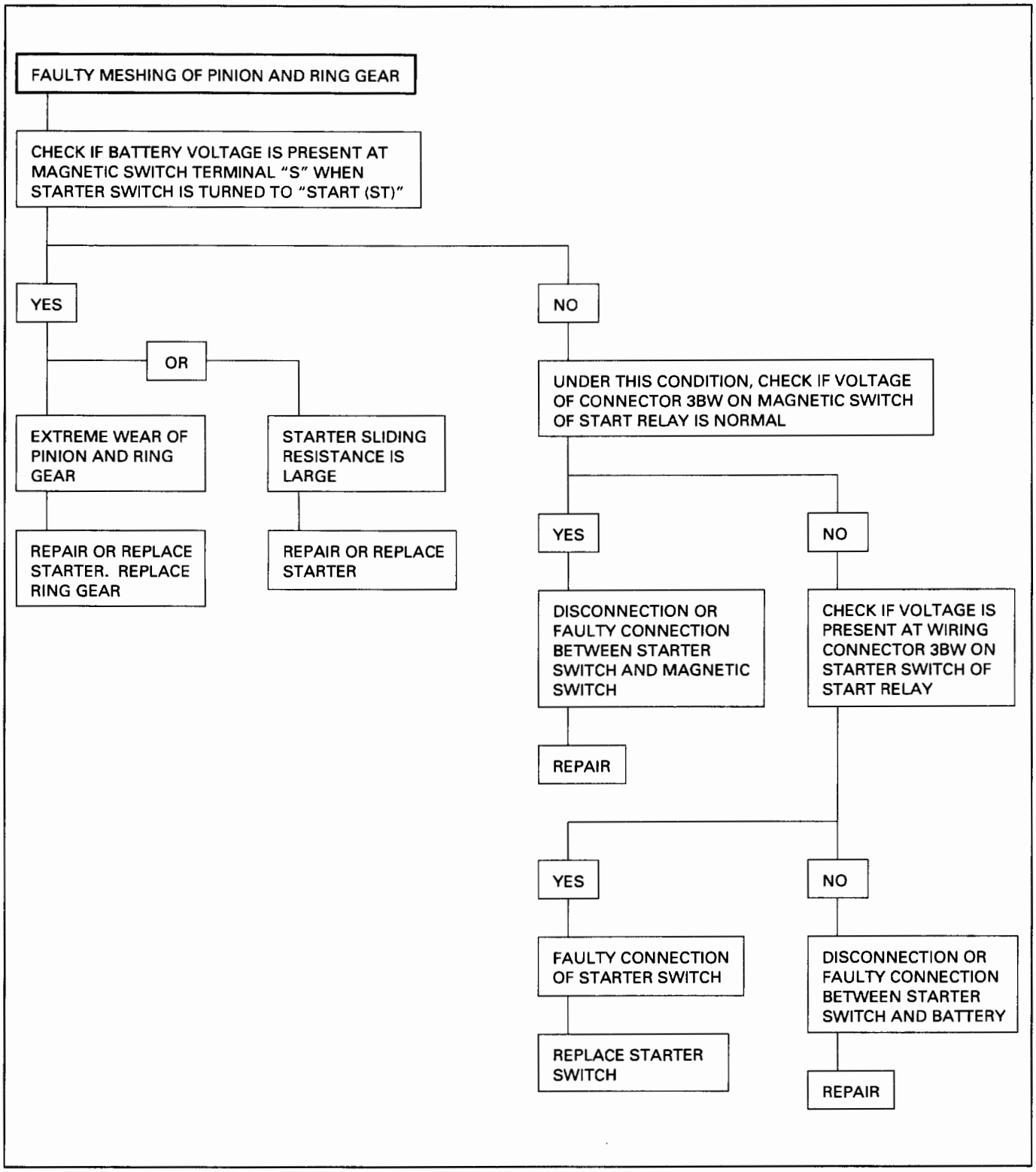
FAULTY MESHING OF PINION AND RING GEAR
CHECK IF BATTERY VOLTAGE IS PRESENT AT MAGNETIC SWITCH TERMINAL "S" WHEN STARTER SWITCH IS TURNED TO "START (ST)"
YES
NO
OR
EXTREME WEAR OF PINION AND RING GEAR
STARTER SLIDING RESISTANCE IS LARGE
REPAIR OR REPLACE STARTER. REPLACE RING GEAR
REPAIR OR REPLACE STARTER
UNDER THIS CONDITION, CHECK IF VOLTAGE OF CONNECTOR 3BW ON MAGNETIC SWITCH OF START RELAY IS NORMAL
YES
NO
DISCONNECTION OR FAULTY CONNECTION BETWEEN STARTER SWITCH AND MAGNETIC SWITCH
CHECK IF VOLTAGE IS PRESENT AT WIRING CONNECTOR 3BW ON STARTER SWITCH OF START RELAY
REPAIR
YES
NO
FAULTY CONNECTION OF STARTER SWITCH
DISCONNECTION OR FAULTY CONNECTION BETWEEN STARTER SWITCH AND BATTERY
REPLACE STARTER SWITCH
REPAIR

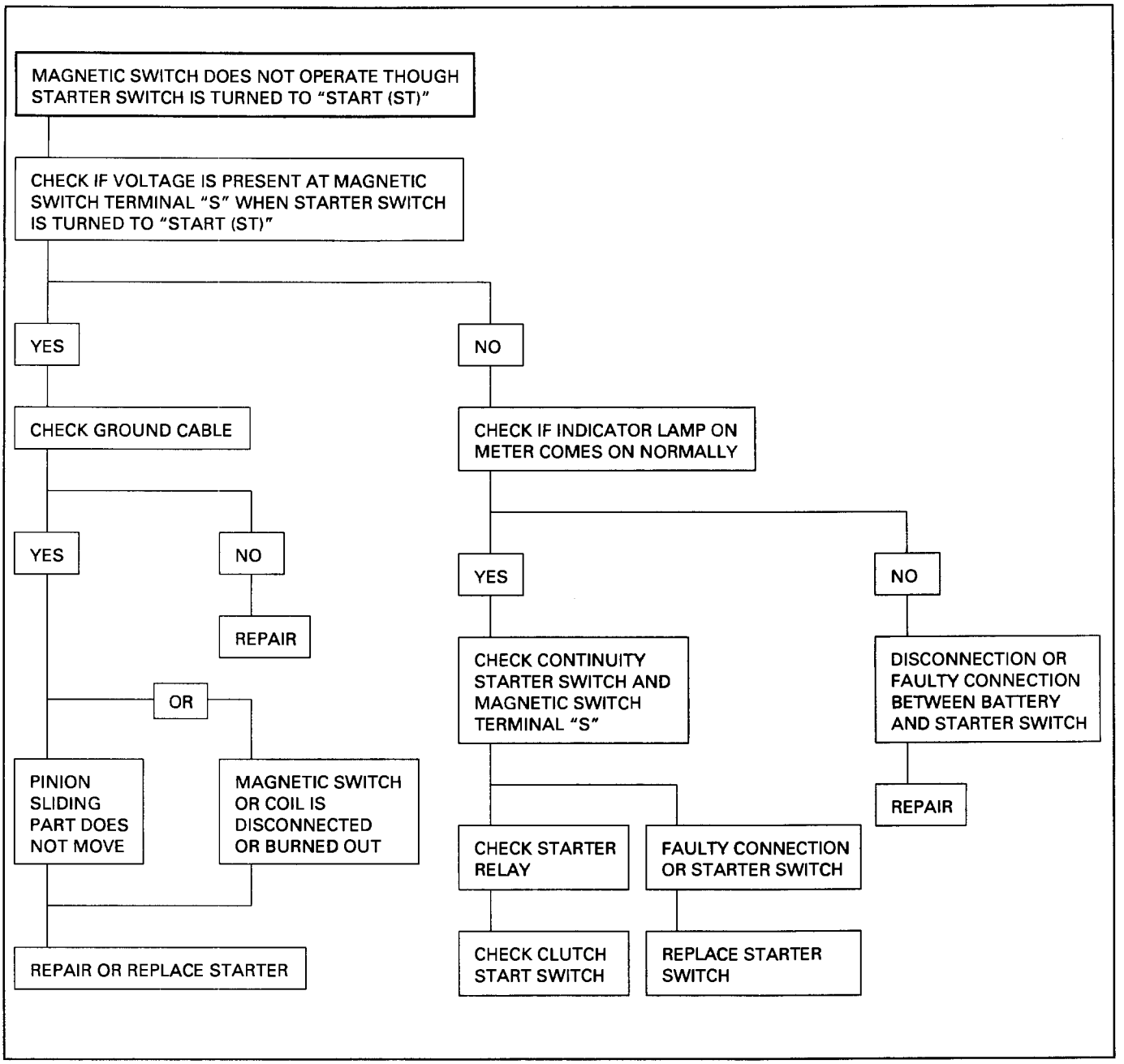
MAGNETIC SWITCH DOES NOT OPERATE THOUGH STARTER SWITCH IS TURNED TO "START (ST)"
CHECK IF VOLTAGE IS PRESENT AT MAGNETIC SWITCH TERMINAL "S" WHEN STARTER SWITCH IS TURNED TO "START (ST)"
YES
NO
CHECK GROUND CABLE
CHECK IF INDICATOR LAMP ON METER COMES ON NORMALLY
YES
NO
REPAIR
OR
PINION SLIDING PART DOES NOT MOVE
MAGNETIC SWITCH OR COIL IS DISCONNECTED OR BURNED OUT
REPAIR OR REPLACE STARTER
YES
NO
CHECK CONTINUITY STARTER SWITCH AND MAGNETIC SWITCH TERMINAL "S"
DISCONNECTION OR FAULTY CONNECTION BETWEEN BATTERY AND STARTER SWITCH
REPAIR
CHECK STARTER RELAY
FAULTY CONNECTION OR STARTER SWITCH
CHECK CLUTCH START SWITCH
REPLACE STARTER SWITCH

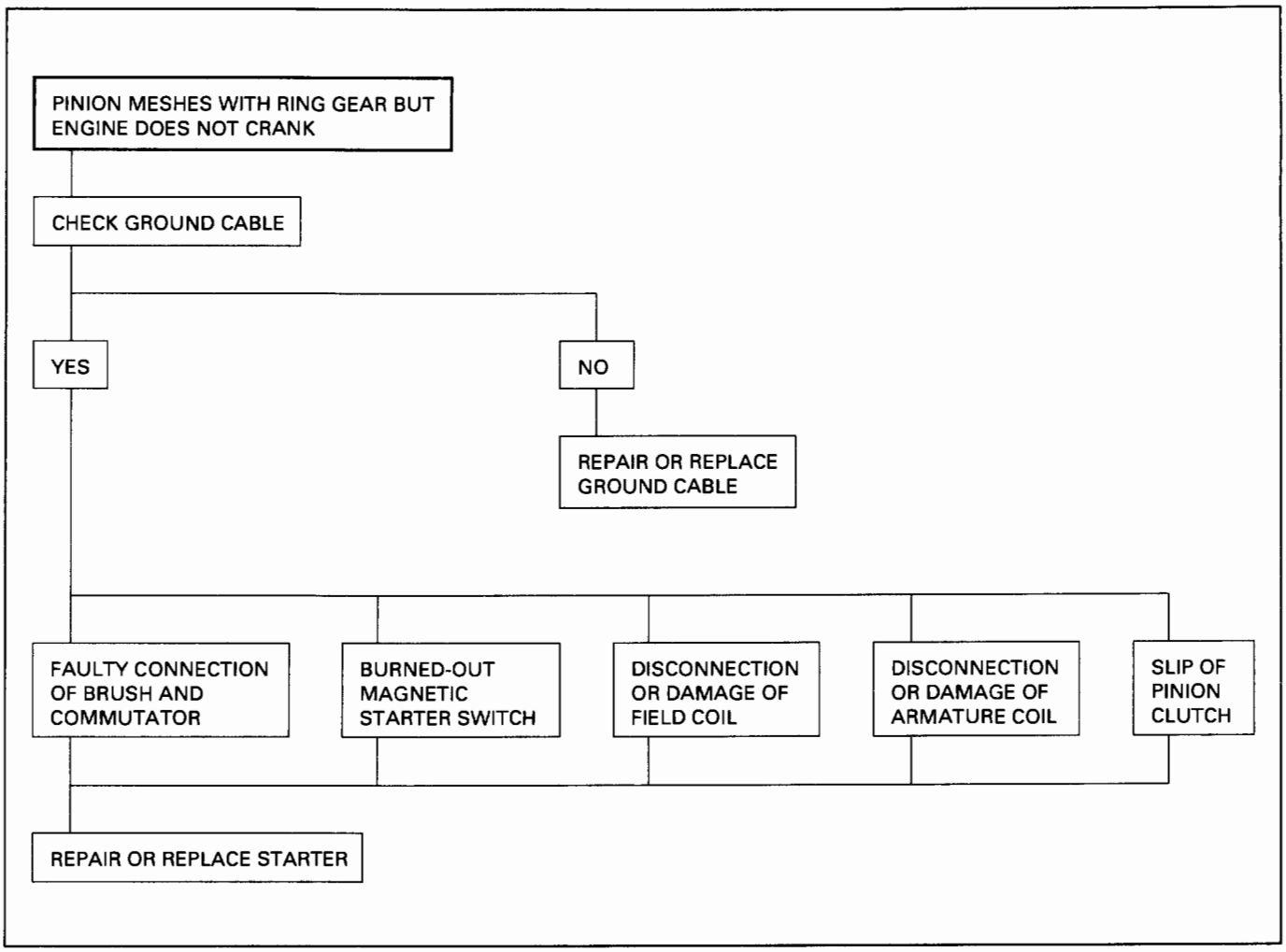
PINION MESHES WITH RING GEAR BUT ENGINE DOES NOT CRANK
CHECK GROUND CABLE
YES
NO
REPAIR OR REPLACE GROUND CABLE
FAULTY CONNECTION OF BRUSH AND COMMUTATOR
BURNED-OUT MAGNETIC STARTER SWITCH
DISCONNECTION OR DAMAGE OF FIELD COIL
DISCONNECTION OR DAMAGE OF ARMATURE COIL
SLIP OF PINION CLUTCH
REPAIR OR REPLACE STARTER

STARTER DOES NOT STOP THOUGH STARTER SWITCH IS RETURNED TO "ON"

DISCONNECT STARTER SWITCH WIRING CONNECTOR, AND CHECK STARTER SWITCH OPERATION.

KEY POSITION	BATTERY B1	IGNITION IG1	BATTERY B2	ACCESSORIES ACC	IGNITION IG2	STARTER ST
LOCK						
OFF						
ACC			●	●		
ON	●	●	●	●	●	
START	●	●	●		●	●

THERE MUST BE NO CONTINUITY EXCEPT ABOVE LINES

YES

MAGNETIC SWITCH CONTACTS ARE FUSED AND NOT MOVED, OR A RETURN SPRING IS BROKEN OR DETERIORATED

REPLACE MAGNETIC SWITCH

NO

REPLACE STARTER SWITCH

ON-VEHICLE SERVICE

STARTER

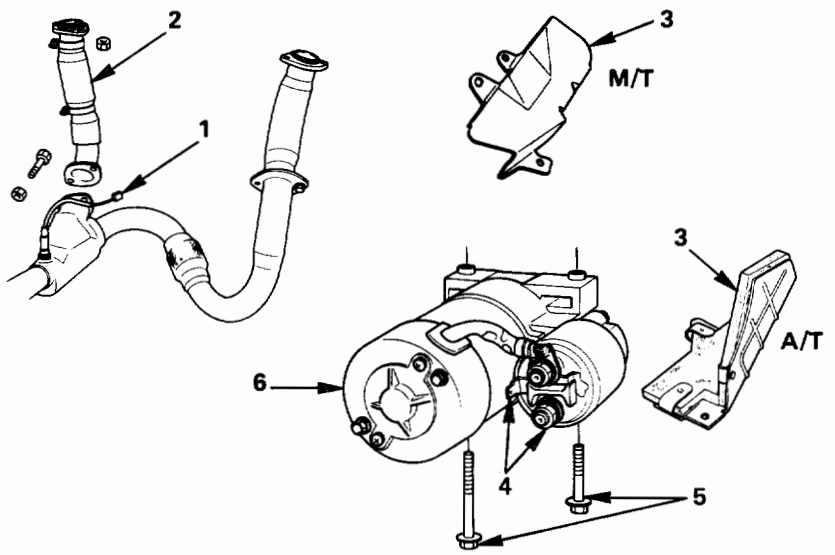

Removal steps
1. Heated Oxygen Sensor connector (A/T)
2. Exhaust pipe, front left
3. Heat protector
4. Starter wiring connector
5. Mounting bolts
6. Starter assembly

Installation steps
To install, follow the removal steps in the reverse order.

Fig. 6D2-3

REMOVAL

Preparation
- Battery ground cable

1. Heated Oxygen Sensor connector (A/T)

2. Exhaust pipe, front left

3. Heat protector

4. Starter wiring connector
- Disconnect the connector from terminals "B" and "S".

5. Mounting bolts
- Remove mounting bolts on inside and outside.

6. Starter assembly
- Remove starter assembly toward the bottom of engine.

INSTALLATION

6. Starter assembly

5. Mounting bolts

Torque	N·m (lb·ft)	40 (30)

4. Starter wiring connector
- Reconnect the connectors to terminals "B" and "S".
- Terminals "B"

Torque	N·m (lb·in)	8.5 (73)

3. Heat protector

2. Exhaust pipe, front left
- Nuts

Torque	N·m (lb·ft)	67 (49)

- Bolts and Nuts

Torque	N·m (lb·ft)	27 (20)

1. Heated Oxygen Sensor connector (A/T)
- Reconnect the battery ground cable.

UNIT REPAIR

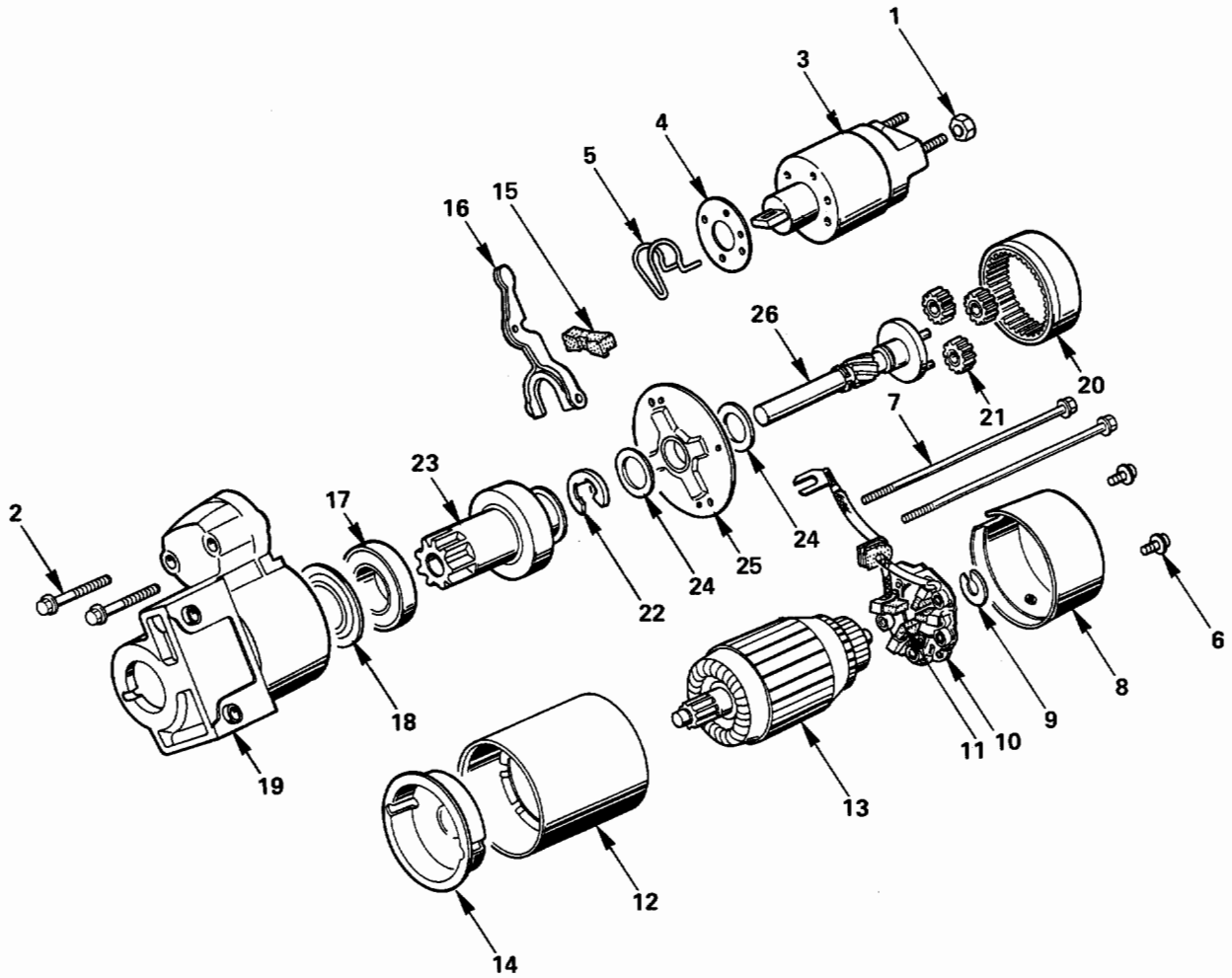

Removal steps

1. Nut
2. Bolt
3. Magnetic switch
4. Dust cover
5. Torsion spring
6. Screw
7. Through washer
8. Rear cover
9. Thrust washer
10. Brush holder
11. Brush
12. Yoke assembly
13. Armature
14. Center bracket
15. Dust cover
16. Shift lever
17. Ball bearing
18. Bearing cover
19. Gear case
20. Internal gear
21. Planet gear
22. E-ring
23. Pinion
24. Thrust washer
25. Center bracket
26. Pinion shaft

Installation steps

To install, follow the removal steps in the reverse order.

Fig. 6D2-4

DISASSEMBLY

1. Nut

- Loosen the nut on terminal "M" of magnetic switch and disconnect the connector cable. (Fig. 6D2-5)

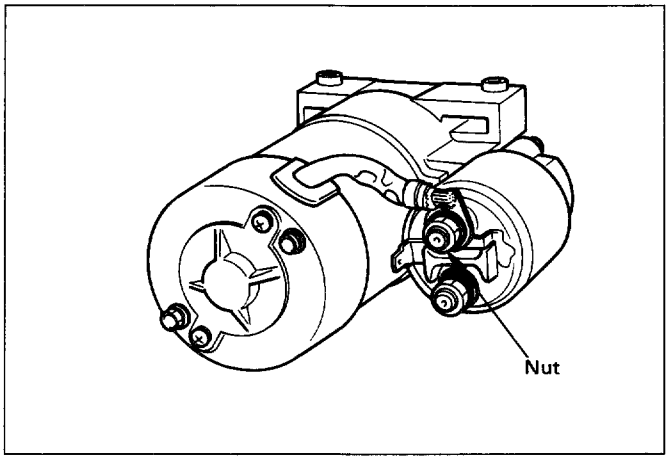

Fig. 6D2-5

2. Bolt (2 pcs)

3. Magnetic switch

4. Dust cover

5. Torsion spring

- Remove bolts, then the magnetic switch assembly.
- Remove torsion spring from magnetic switch assembly. (Fig. 6D2-6)

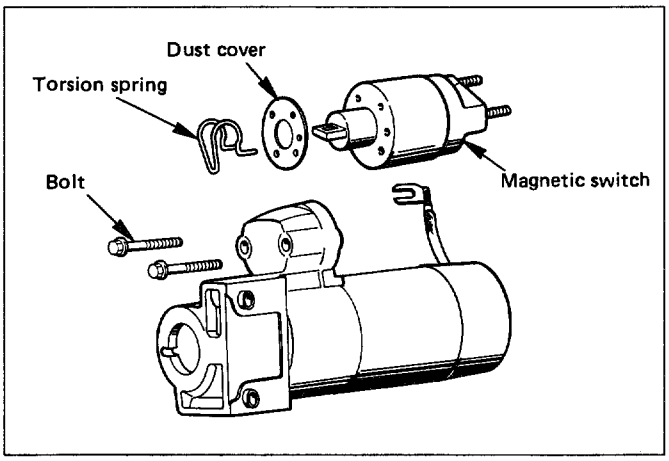

Fig. 6D2-6

6. Screw (2 pcs)

7. Through bolt (2 pcs)

9. Thrust washer

- Remove screws and through bolts, then the rear cover. (Fig. 6D2-7)

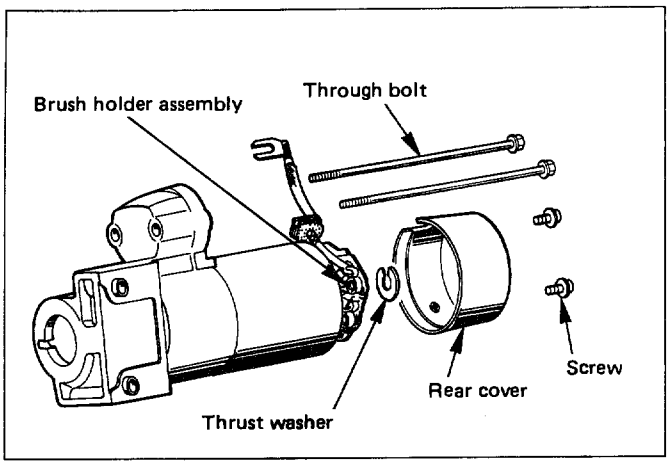

Fig. 6D2-7

10. Brush holder

11. Brush

- Raise a brush spring to detach brushes (4 pcs) from the commutator face and pull off the brush holder. (Fig. 6D2-8)

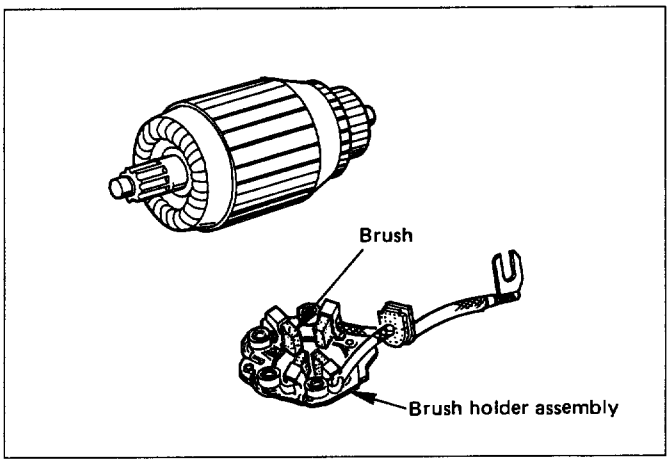

Fig. 6D2-8

12. Yoke assembly

13. Armature

14. Center bracket (A)

- Pull off the yoke assembly, then remove armature, washer and center bracket. (Fig. 6D2-9)

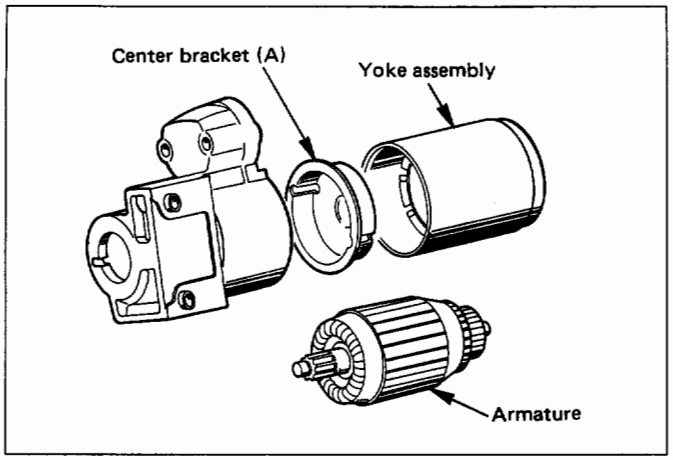

Fig. 6D2-9

⚠ In disassembling the yoke assembly, hold the armature and pull off slowly the yoke assembly. Because of strong magnetic force, avoid placing a metallic part near armature.

15. Dust cover

16. Shift lever

- Remove a dust cover and shift lever from the gear case. (Fig. 6D2-10)

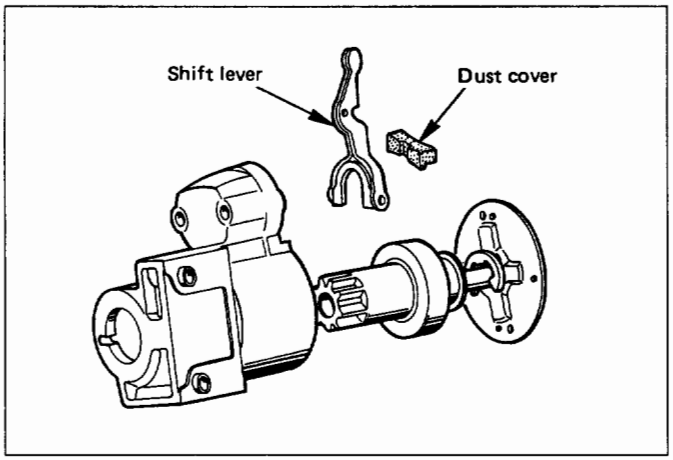

Fig. 6D2-10

17. Ball bearing

18. Bearing cover

19. Gear case

- Remove a ball bearing and bearing cover from the gear case. (Fig. 6D2-11)

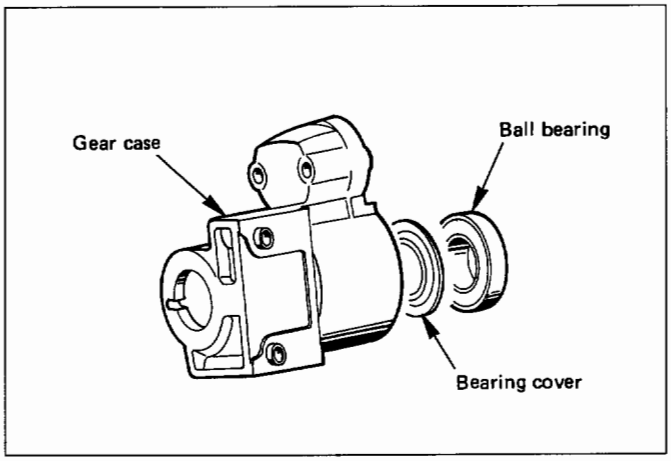

Fig. 6D2-11

20. Internal gear

21. Planet gear (3)

- Remove internal gear and planet gear. (Fig. 6D2-12)

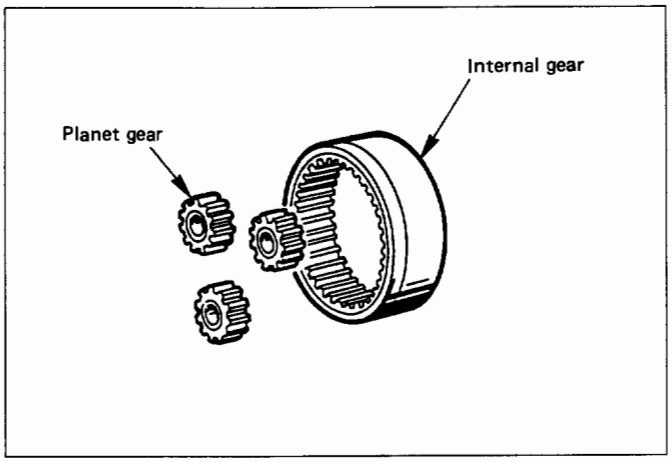

Fig. 6D2-12

22. E-ring

- Remove an E-ring from the pinion shaft using a flat-blade screwdriver. (Fig. 6D2-13)

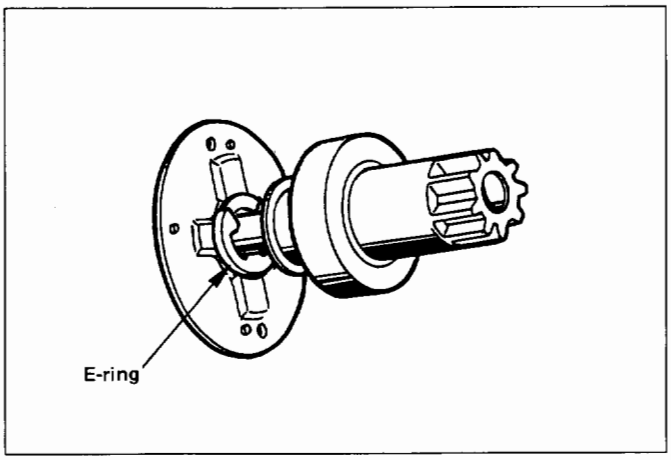

Fig. 6D2-13

23. Pinion

Disassembling pinion

- Holding the pinion shaft, push pinion toward the center bracket.
- Turn the pinion clockwise or counterclockwise by one tooth of spline, then pull off the pinion. (Fig. 6D2-14)

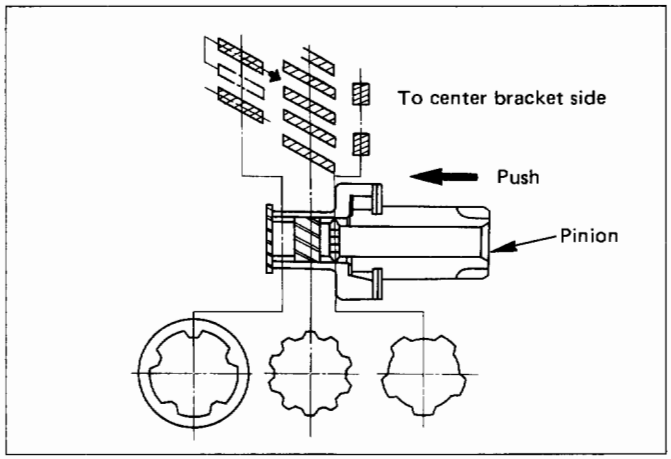

Fig. 6D2-14

24. Thrust washer (2)

25. Center bracket

26. Pinion shaft (Fig. 6D2-15)

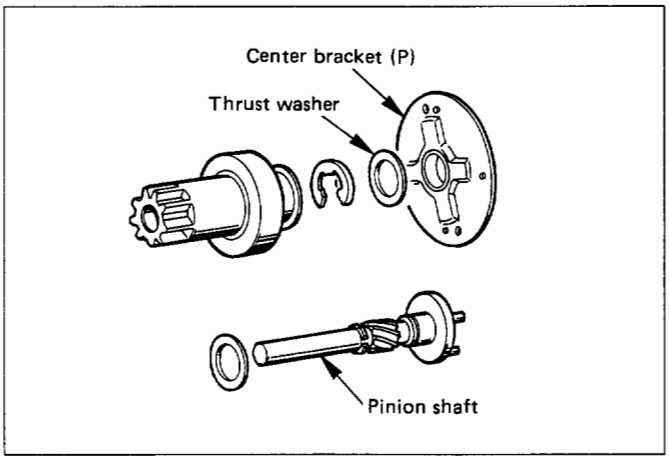

Fig. 6D2-16

INSPECTION AND REPAIR

Repair or replace necessary parts if extreme wear or damage is found during inspection.

Armature

- Measure the outer diameter of commutator, and replace with a new one if it is out of the limit. (Fig. 6D2-16)

mm (in)

Standard	Limit
33 (1.30)	32 (1.26)

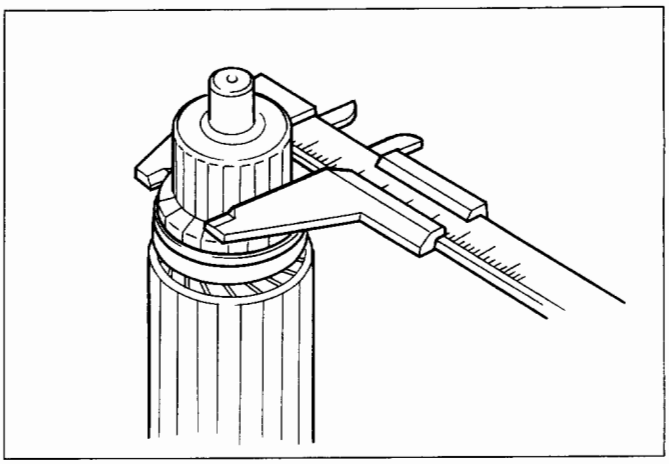

Fig. 6D2-16

- Check for continuity between commutator and segment. Replace commutator if there is no continuity (i.e., disconnected). (Fig. 6D2-17)

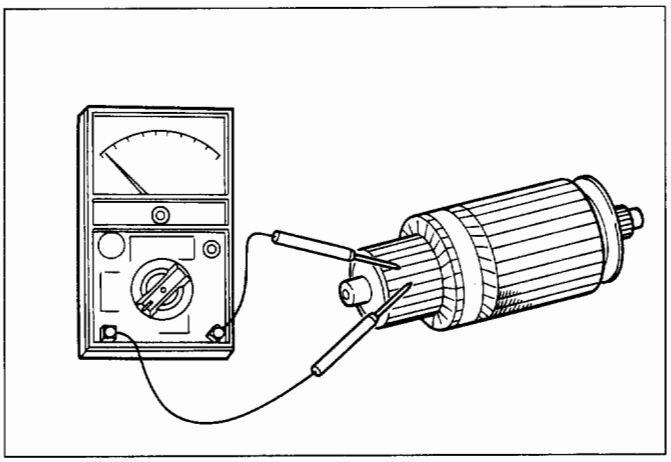

Fig. 6D2-17

- Check for continuity between commutator and shaft. Also, check for continuity between commutator and armature core,armature core and shaft. Replace commutator if there is continuity (i.e., internally grounded). (Fig. 6D2-18)

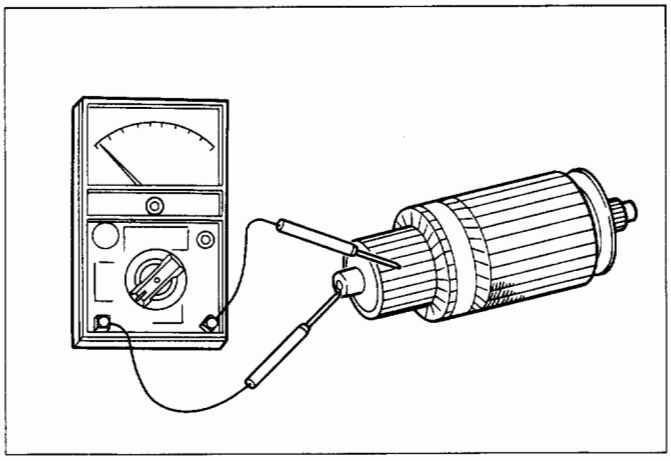

Fig. 6D2-18

- Measure runout of armature core and commutator with a dial gage. Repair or replace, if it exceeds the limit. (Fig. 6D2-19)

mm (in)

Name	Standard	Limit
Armature	0.05 (0.002) max.	0.1 (0.004)
Commutator	0.05 (0.002) max.	0.1 (0.004)

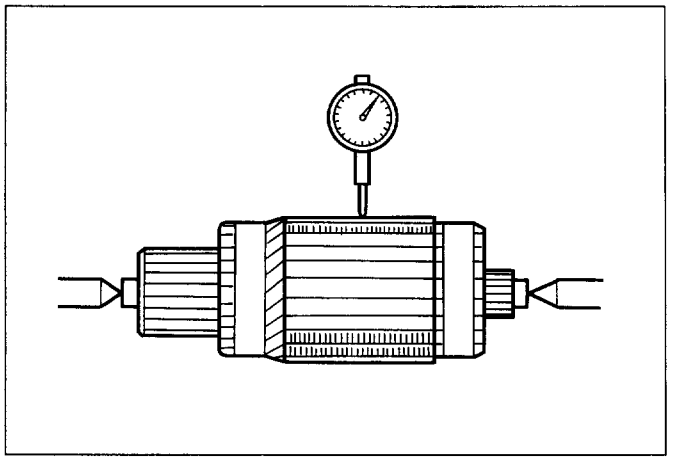

Fig. 6D2-19

- Polish the commutator surface with sand paper #500 to #600 if it is rough. (Fig. 6D2-20)

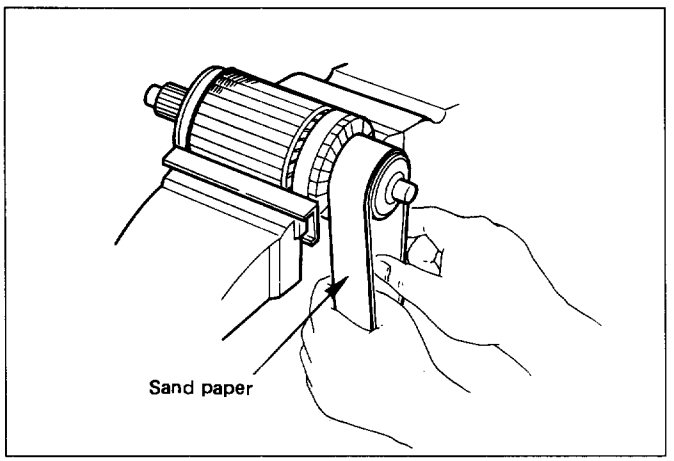

Fig. 6D2-20

- Measure the depth of insulator in commutator. Repair, if it is below the limit. (Fig. 6D2-21)

mm (in)

Standard	Limit
0.5 ~ 0.8 (0.02 ~ 0.03)	0.2 (0.008)

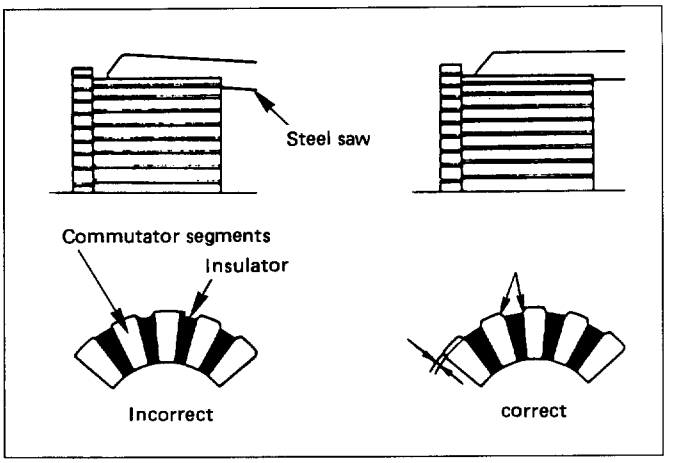

Fig. 6D2-21

Brush

- Measure the length of brush.
  Replace with a new one, if it is below the limit. (Fig. 6D2-22)

mm (in)

Standard	Limit
16 (0.63)	11 (0.43)

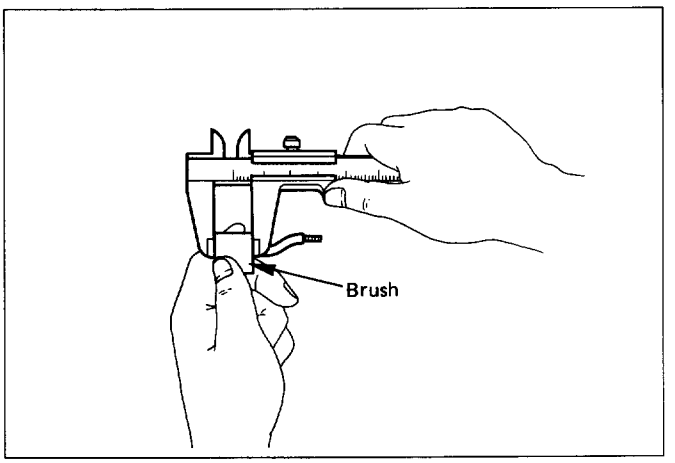

Fig. 6D2-22

Brush holder

- Check for continuity between brush holder (+) and base (–). Replace, if there is continuity (i.e., insulation is broken). (Fig. 6D2-23)

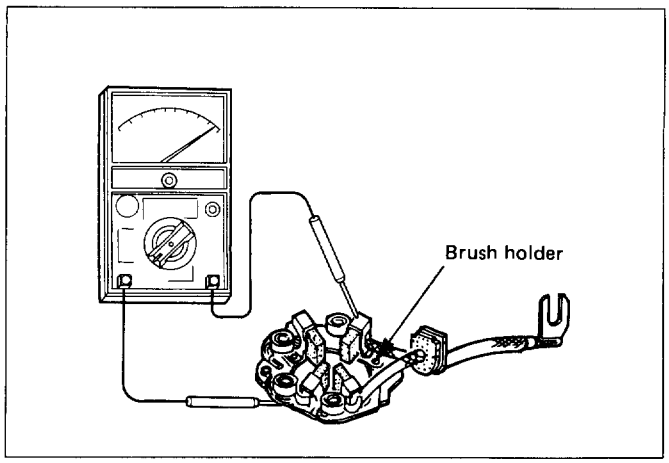

Fig. 6D2-23

Magnetic switch

- Continuity of shunt coil
  Check for continuity between terminals S and M. Replace, if there is no continuity (i.e., coil is disconnected). (Fig. 6D2-24)

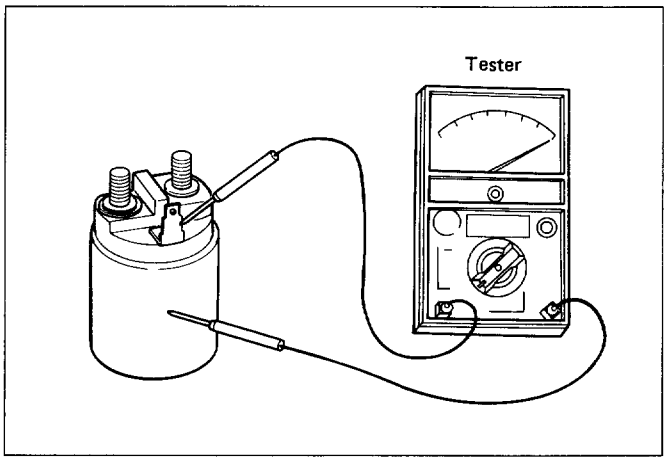

Fig. 6D2-24

- Continuity of series coil
  Check for continuity between terminals S and M. Replace, if there is no continuity (i.e., coil is disconnected). (Fig. 6D2-25)

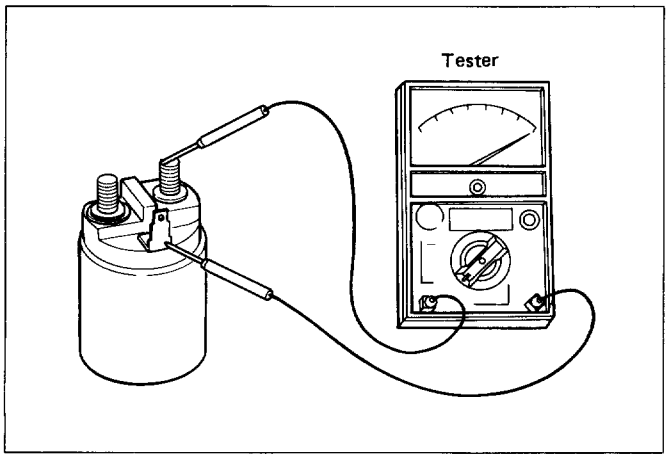

Fig. 6D2-25

- Continuity of contacts
  With the plunger faced downward, push down the magnetic switch. In this state, check for continuity between terminals B and M. Replace, if there is no continuity (i.e., contacts are faulty). (Fig. 6D2-26)

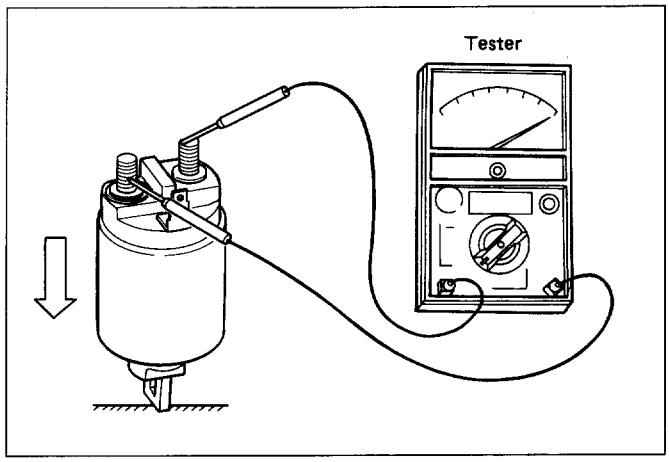

Fig. 6D2-26

Pinion

- Check if the pinion rotates smoothly in drive direction by hand, or if it is locked when it is rotated reversely. If not, replace the pinion. (Fig. 6D2-27)

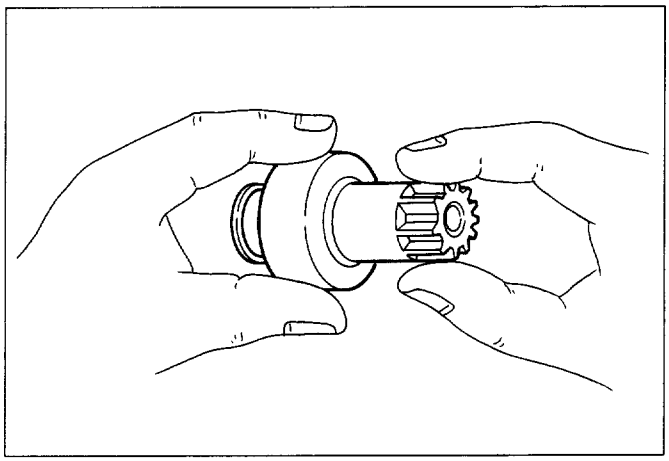

Fig. 6D2-27

Yoke assembly

- Check a magnet inside the yoke.
  Replace the yoke assembly if it is broken. (Fig. 6D2-28)

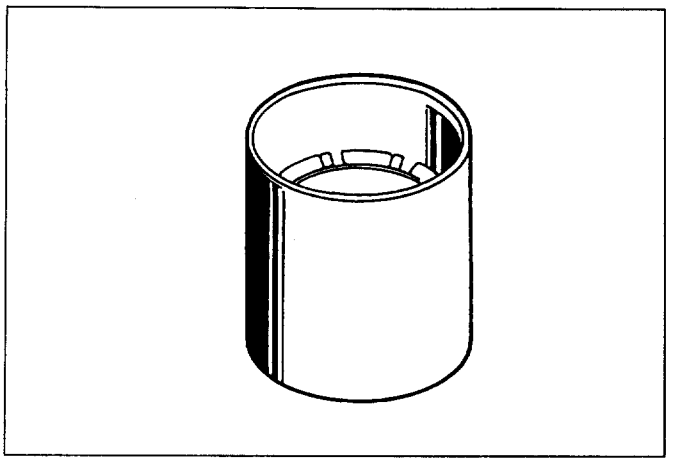

Fig. 6D2-28

Ball bearing

- Clamp the inner race of ball bearing with your finger, and check for sticking or play when rotating the outer race.
  Replace, if abnormality is found. (Fig. 6D2-29)

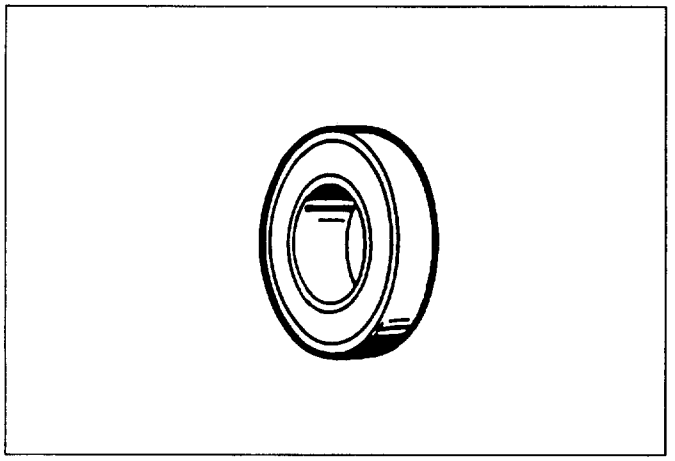

Fig. 6D2-29

- Measure inner diameter of bushing in the rear cover, and replace if it exceeds the limit. (Fig. 6D2-30)

mm (in)

Standard	Limit
12.5 (0.49) + 0.027 (0.001) 0	0.1 (0.004)

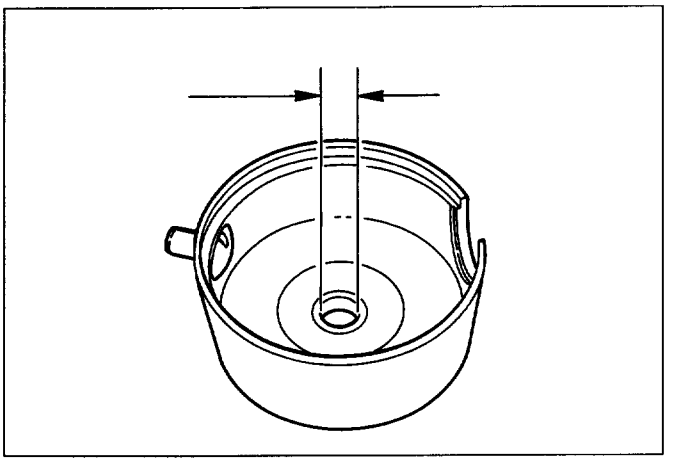

Fig. 6D2-30

- Measure inner diameter of bushing in the center bracket (P), and replace if it exceeds the limit. (Fig. 6D2-31)

mm (in)

Standard	Limit
18 (0.71) + 0.127 (0.005) + 0.1 (0.004)	0.1 (0.004)

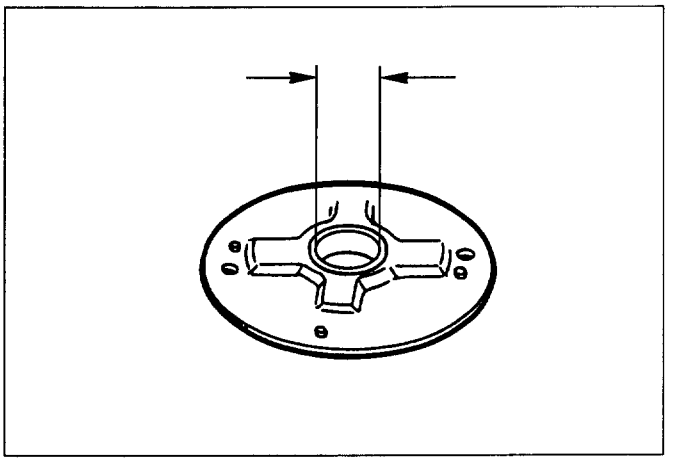

Fig. 6D2-31

REASSEMBLY

To install, follow the removal steps in the reverse order, noting the following points:

Grease application places

- Bushing in rear cover and center bracket
- Gears in reduction gear
- Shift lever operating portion
- Sliding portion of pinion
- Plunger sliding portion of magnetic switch

Reassembling Yoke Assembly

Before reassembly, make sure that no metallic parts attach to the yoke assembly. Because of strong magnetic force, hold the yoke assembly and insert it slowly into the armature.

TORQUE

Torque for each part (See page 6D2-18)

Pinion jump-out dimension

- Connect the "+" cable of battery to terminal S and the "–" cable to terminal M. Turn the switch on, and measure pinion travel dimension " ℓ " in thrust direction from the jump-out position. (Fig. 6D2-32)

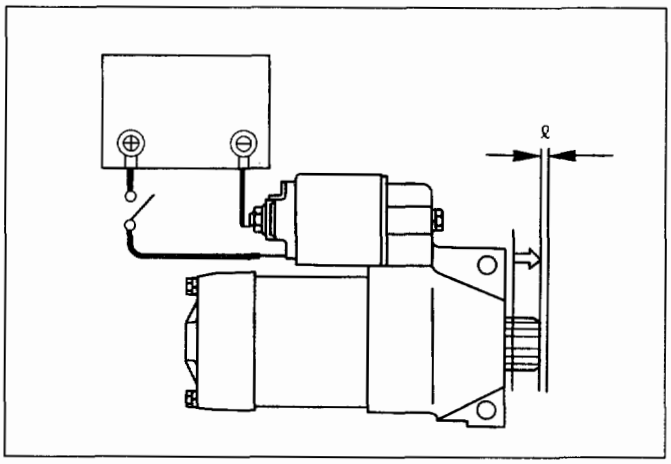

Fig. 6D2-32

In measuring the dimension, pull the pinion out a little in the arrow direction.

mm (in)

Dimension	Standard
ℓ	0.05 (0.002) ~ 1.5 (0.06)

If the measured value is out of standard, insert dust cover, or disassemble and adjust. (Fig. 6D2-33)

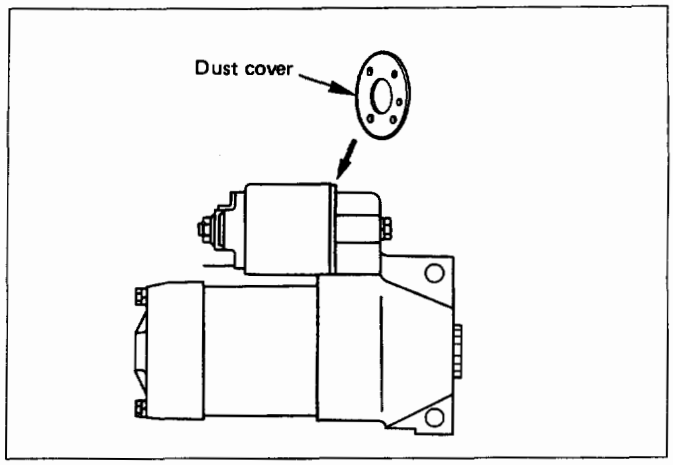

Fig. 6D2-33

Characteristic Test

For easily confirming the characteristics, conduct the no-load test as follows:

* Rating as short as 30 seconds requires rapid testing.

- Fix the starter on the test bench, and wire as shown in Fig. 6D2-34. When the switch is closed, the current flows and the starter runs under no load. At this time, measure current, voltage and speed to check if they satisfy the standard.

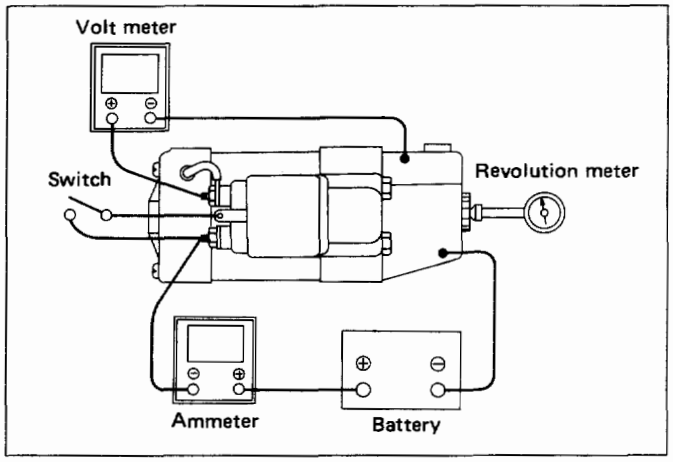

Fig. 6D2-34

MAIN DATA AND SPECIFICATIONS

Model		HITACHI GD002350
Rating		
Voltage	V	12
Output	kw	1.4
Time	sec	30
Number of teeth of pinion		9
Rotating direction (as viewed from pinion)		Clockwise
Weight (approx.)	N	34
No–load characteristics		
Voltage/current	V/A	11/90 or less
Speed	rpm	2700 or more
Load characteristics		
Voltage/current	V/A	8.4/250
Torque	N·m (lb·in)	7.3 (64) or more
Speed	rpm	1200 or more
Locking characteristics		
Voltage/current	V/A	3/750 or less
Torque	N·m (lb·ft)	19 (14) or more

TORQUE SPECIFICATIONS

N·m (lb·in)

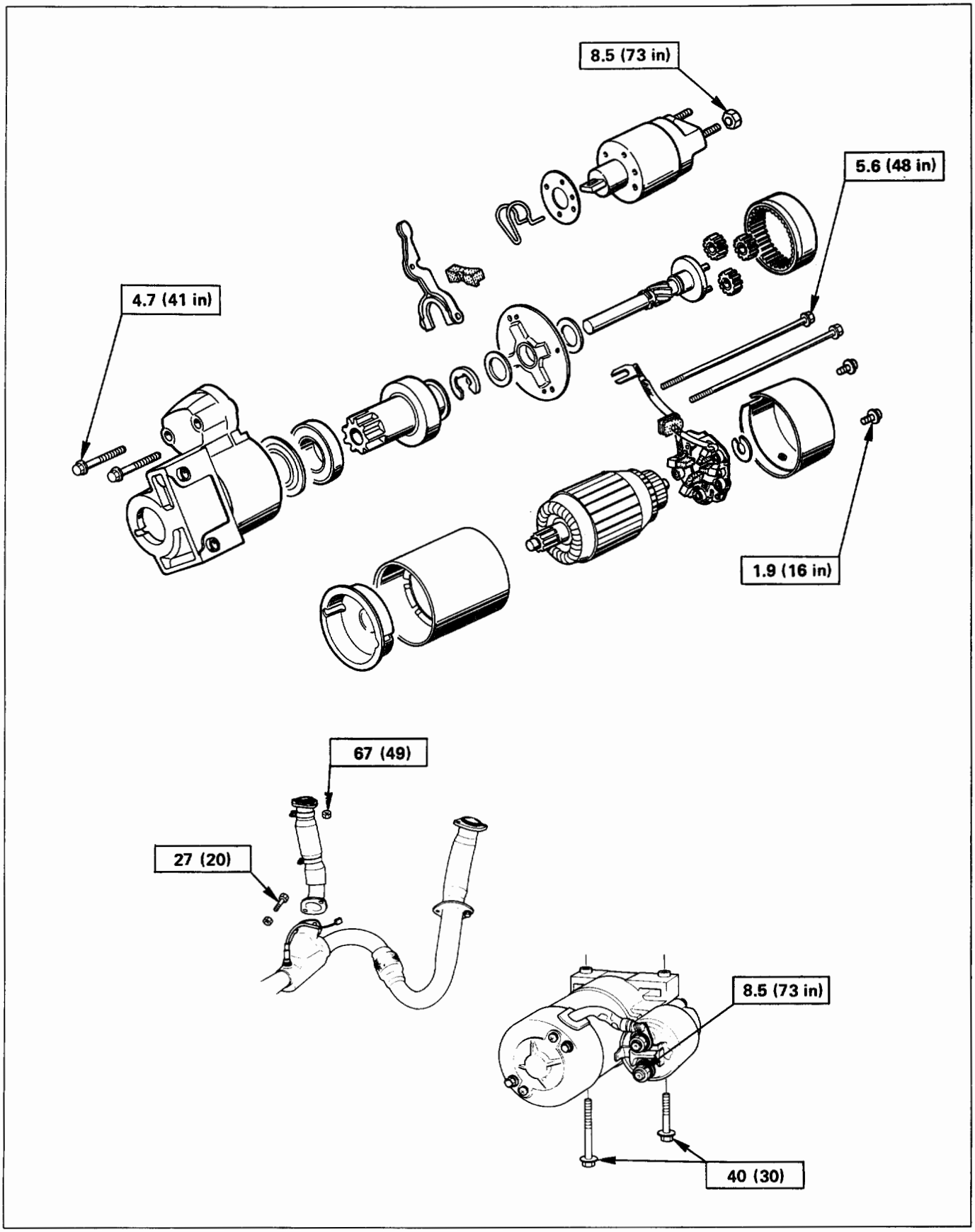

Fig. 6D2-35

SECTION 6D3

CHARGING SYSTEM

CONTENTS

General Description 6D3-1
Diagnosis 6D3-3
On-Vehicle Service 6D3-4
Unit Repair 6D3-6
Inspection and Repair 6D3-8
Main Data and Specifications 6D3-12

GENERAL DESCRIPTION

The charging system is the IC integral regulator charging system and its main components are connected as shown in Fig. 6D3-1.
The regulator is a solid state type and it is mounted along with the brush holder assembly inside the generator installed on the rear end cover.

The generator does not require particular maintenance such as voltage adjustment. The rectifier connected to the stator coil has eight diodes to transform A.C. voltage into D.C. voltage. This D.C. voltage is connected to the output terminal of generator. (Fig. 6D3-1)

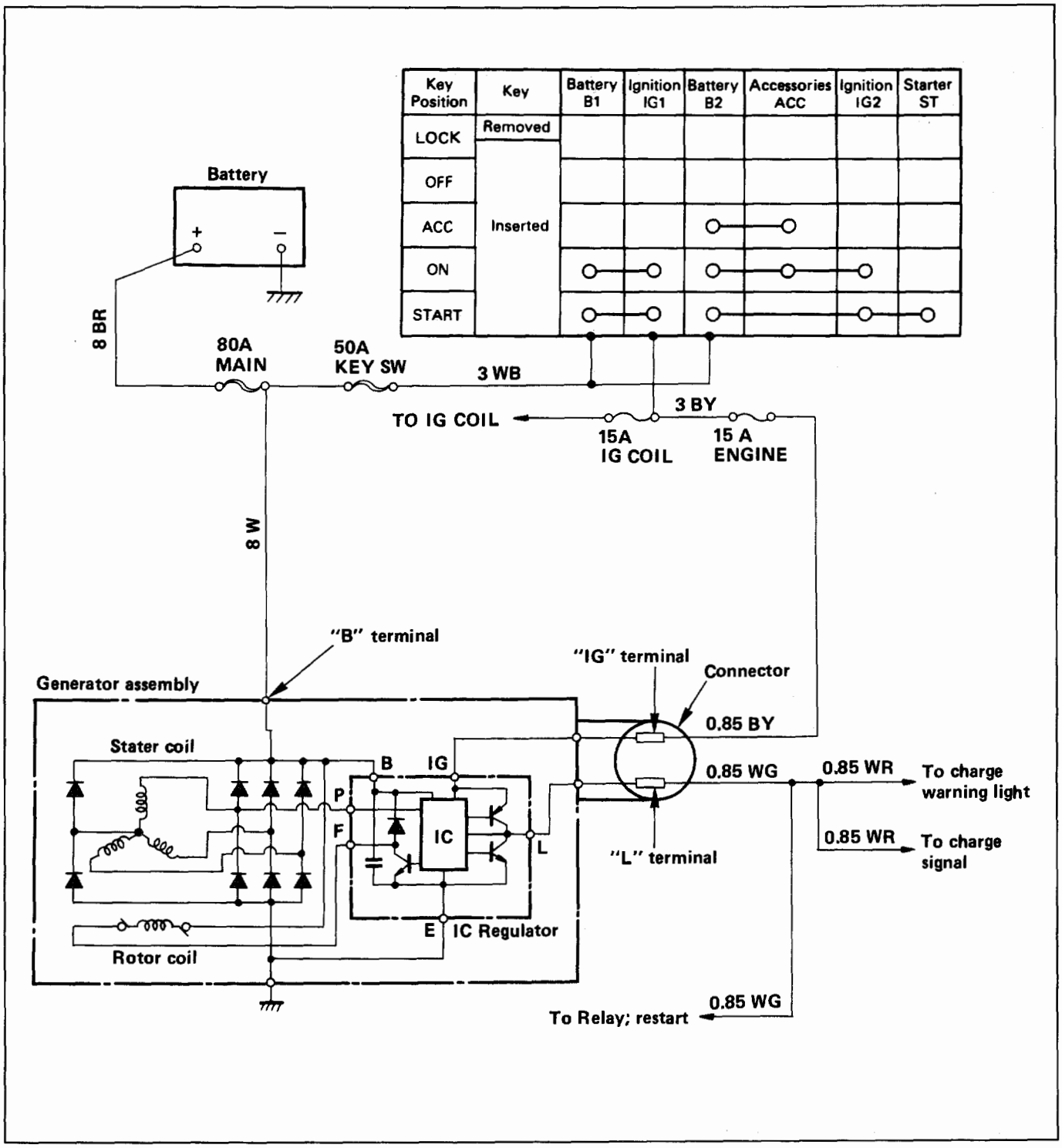
Key Position
Key
Battery B1
Ignition IG1
Battery B2
Accessories ACC
Ignition IG2
Starter ST
LOCK
Removed
OFF
ACC
Inserted
ON
START
Battery
+
–
8 BR
80A MAIN
50A KEY SW
3 WB
TO IG COIL
3 BY
15A IG COIL
15 A ENGINE
8 W
"B" terminal
"IG" terminal
Connector
Generator assembly
0.85 BY
Stater coil
B
IG
0.85 WG
0.85 WR
To charge warning light
P
F
IC
L
0.85 WR
To charge signal
"L" terminal
E
IC Regulator
Rotor coil
0.85 WG
To Relay; restart

Fig. 6D3-1

DIAGNOSIS

GENERAL ON-VEHICLE INSPECTION

The operating condition of charging system is indicated by the charge warning lamp. The warning lamp comes on when the starter switch is turned to "ON" position. The charging system operates normally if the lamp goes off when the engine starts. If the warning lamp shows abnormality or if undercharged or overcharged battery condition is suspected, perform diagnosis by checking the charging system as follows:

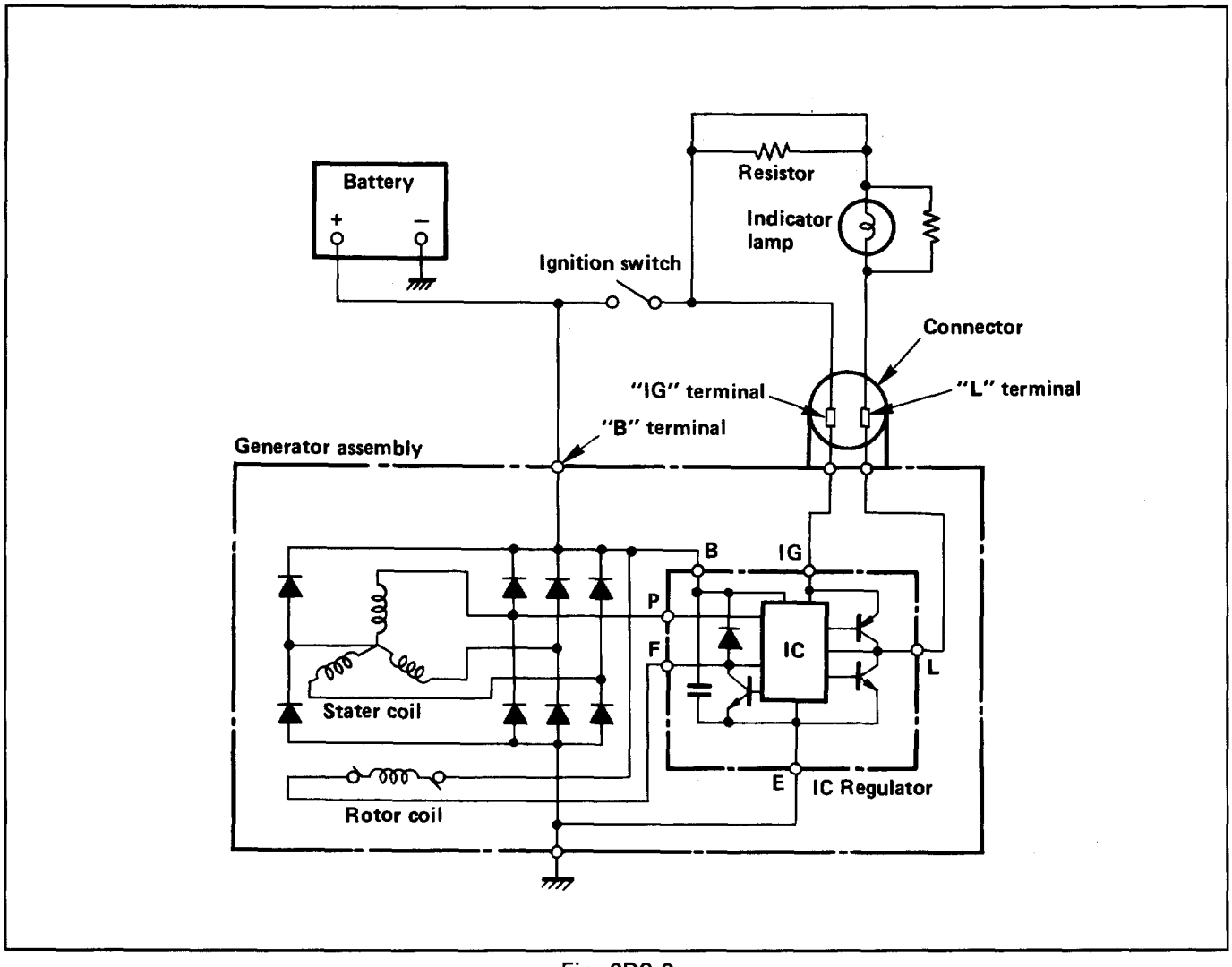

Fig. 6D3-2

1. Check visually the belt and wiring connector.
2. With the engine stopped, turn the starter switch to "ON" position and observe the warning lamp.
   - If lamp does not come on:
     Disconnect wiring connector from generator, and ground the terminal "L" on connector side.
   - If lamp comes on:
     Repair or replace the generator.

ON-VEHICLE SERVICE

GENERATOR (Fig. 6D3-3)

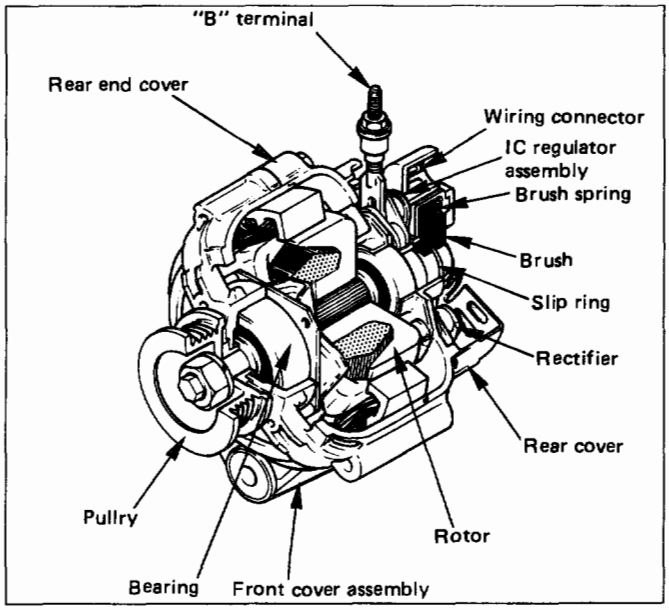

Fig. 6D3-3

INSPECTION

1. Disconnect the wiring connector from generator.
2. With the engine stopped, turn starter switch to "ON" and connect a voltmeter between connector terminal L and ground or between terminal IG and ground. (Fig. 6D3-4)

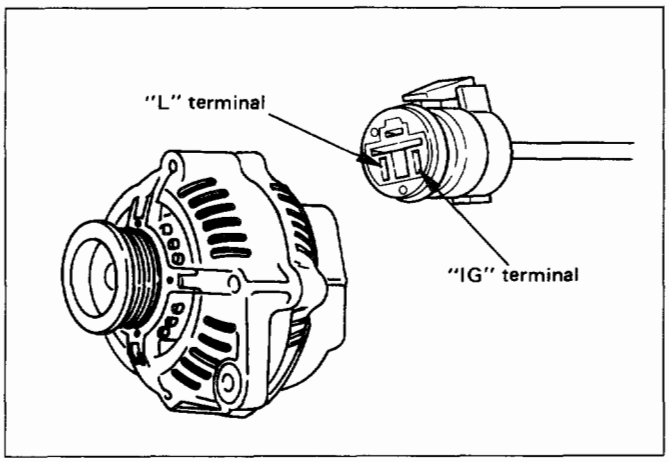

Fig. 6D3-4

If voltage is not present, the line between battery and connector is disconnected and so requires repair.

3. Reconnect the wiring connector to the generator, run the engine at middle speed, and turn off all electrical devices other than engine.
4. Measure battery voltage. If it exceeds 16V, repair or replace the generator.
5. Connect an ammeter to output terminal of generator, and measure output current under load by turning on the other electrical devices (eg., headlights). At this time, the voltage must not be less than 13V.

Generator rating	Ammeter reading
12V – 60A	20 A
12V – 75A	25 A

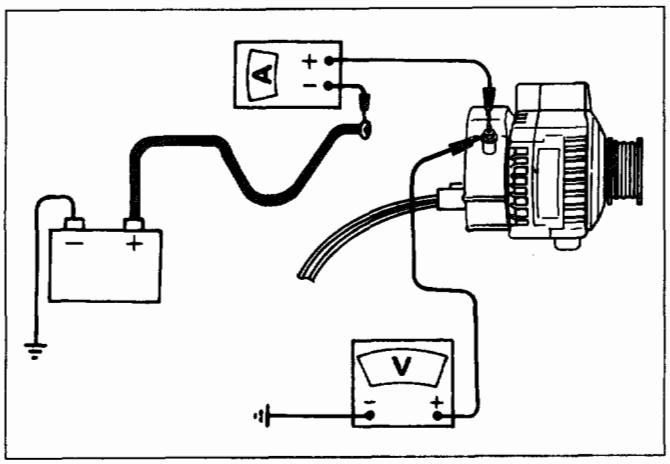

Fig. 6D3-5

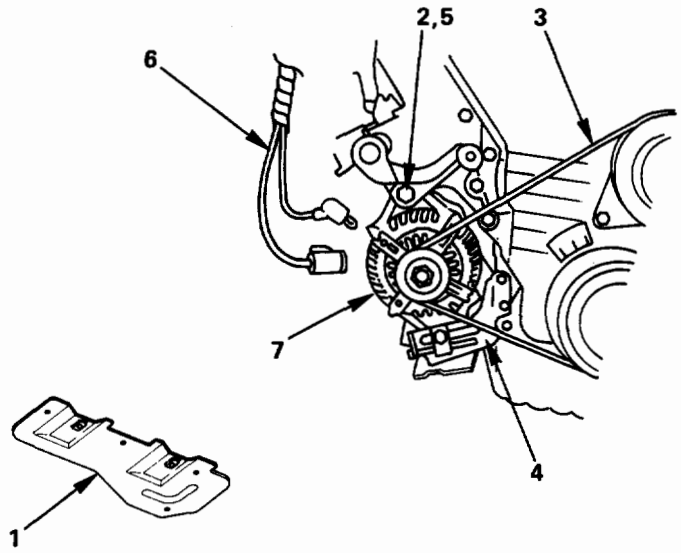

Removal steps
1. Front under cover
2. Loosen generator fixing bolt
3. Fan belt
4. Adjuster
5. Remove generator fixing bolt in step 2.
6. Wiring connector
7. AC generator assembly

Installation steps
To install, follow the removal steps in the reverse order.

Fig. 6D3-6

REMOVAL

Preparation

- Battery ground cable

1. **Front under cover**
2. **Generator fixing bolt**
   - Loosen fixing bolt.
3. **Fan Belt**
   - Loosen lock bolt.
   - Loosen adjust bolt.
4. **Adjuster**
5. **Generator fixing bolt**
   - Remove the fixing bolt.
6. **Wiring connector**
   - Disconect terminal "B" and connector.
   - From generator, supporting generator assembly by hand.
7. **Generator assembly**
   - Take out generator below.

INSTALLATION

7. **Generator assembly**
   - Direct terminal "B" to below side and bring generator assembly to the position to be installed.
6. **Wiring connector**
   - Connect harness connector and direct terminal "B" to above side.
5. **Generator fixing bolt**
   - Temporarily secure with bolts.
4. **Adjuster**
3. **Fan Belt**
   - Refer to item "Drive belt adjustment" in the 10 page of section 6B-10.
2. **Fan belt**
1. **Front under cover**
   - Battery ground cable

UNIT REPAIR

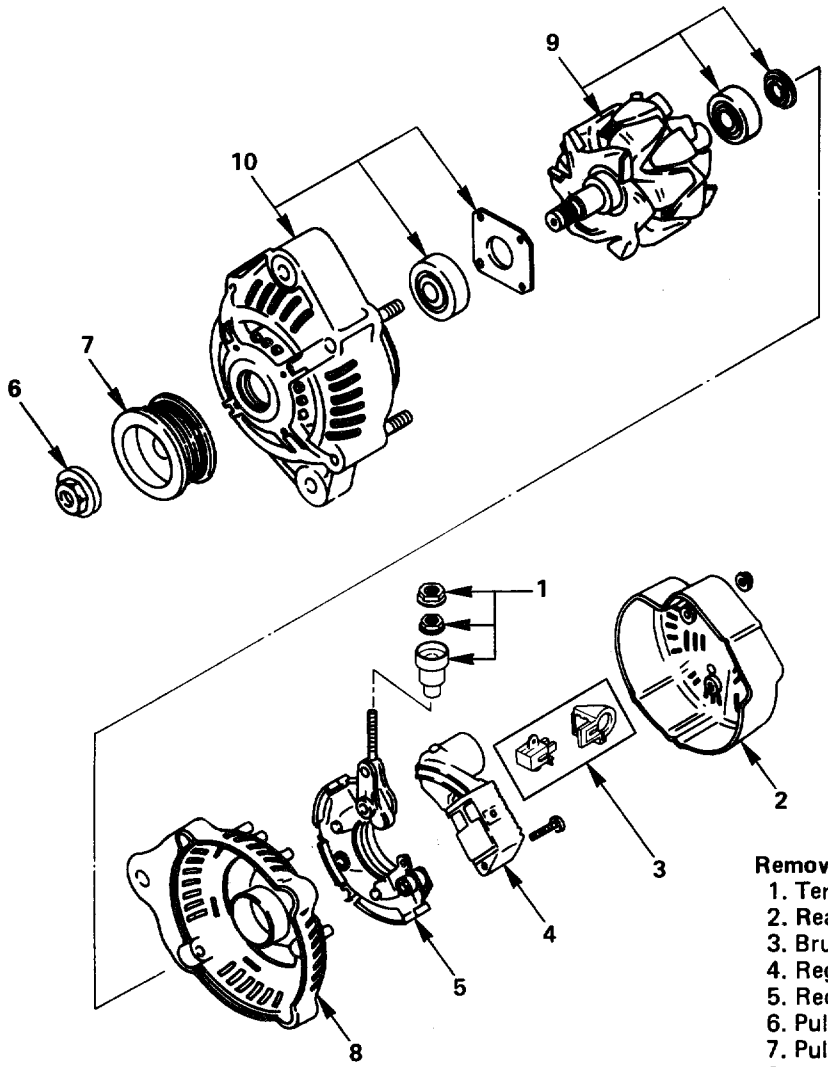

Removal steps
1. Terminal insulator and nut
2. Rear cover
3. Brush holder assembly
4. Regulator assembly
5. Rectifier
6. Pulley nut
7. Pulley
8. Rear end cover
9. Rotor assembly
10. Front cover assembly

Installation steps
To install, follow the removal steps in the reverse order.

Fig. 6D3-7

DISASSEMBLY

1. Terminal insulator and nut

2. Rear cover

- Remove three nuts on the rear cover and a nut on terminal B and insulator, then remove the rear cover. (Fig. 6D3-8)

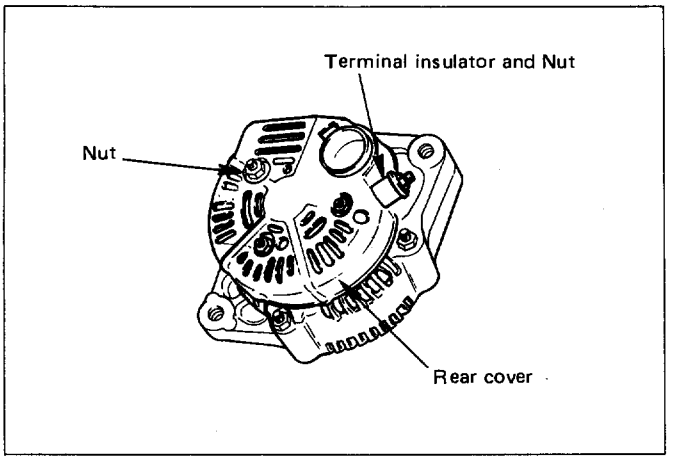

Fig. 6D3-8

3. Brush holder assembly

- Remove two screws that fix the brush holder and rectifier, then remove the brush holder assembly. (Fig. 6D3-9)

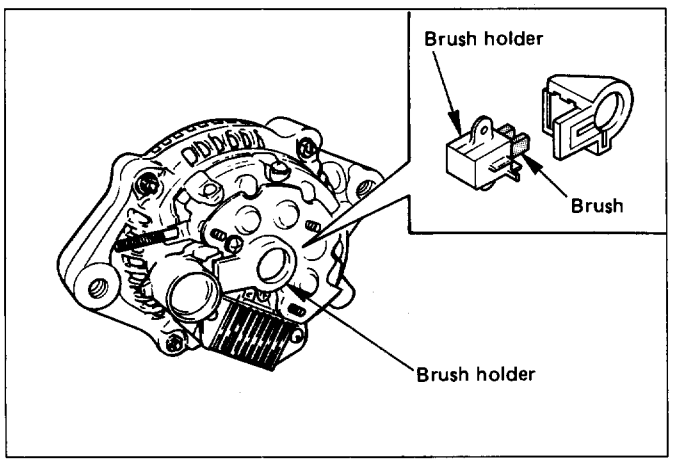

Fig. 6D3-9

4. Regulator assembly

- Remove three screws on the IC regulator, then the IC regulator. (Fig. 6D3-10)

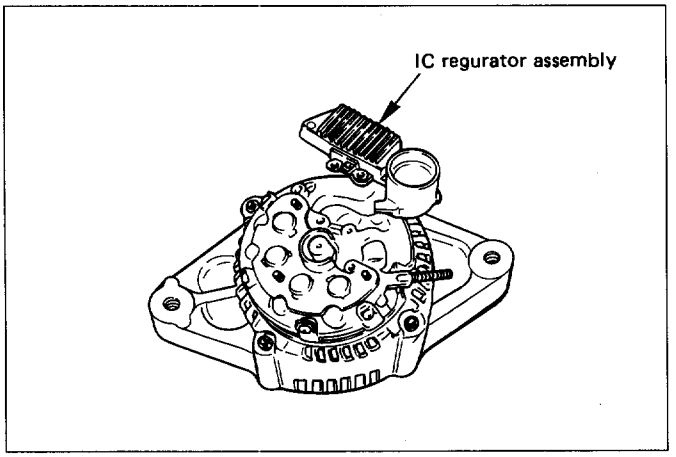

Fig. 6D3-10

5. Rectifier

- Remove four screws that fix rectifier and stator lead wires. (Fig. 6D3-11)

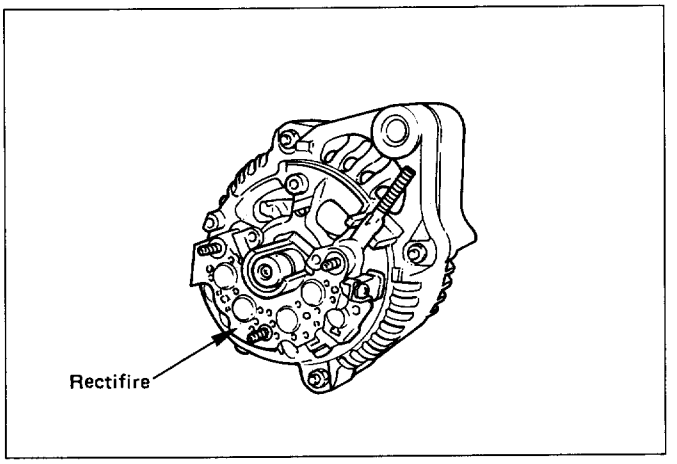

Fig. 6D3-11

6. Pulley nut

7. Pulley

- Cover the vise with copper plates, clamp the pulley in the vise, and remove the nut. (Fig. 6D3-12)

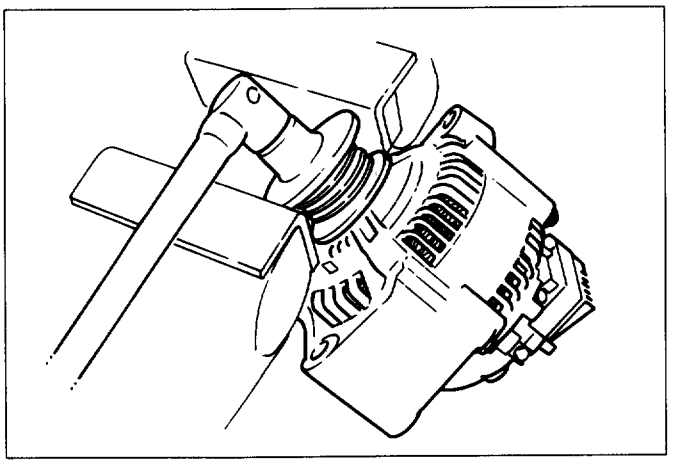

Fig. 6D3-12

8. Rear end cover

- Remove four nuts that secure the front cover assembly and rear end cover, and an insulator. (Fig. 6D3-13)

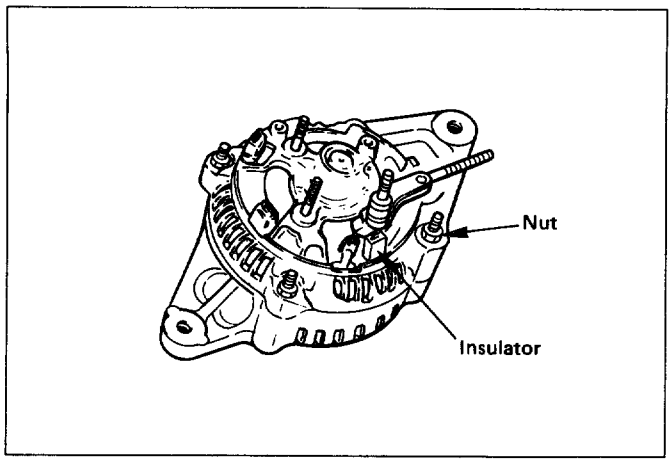

Fig. 6D3-13

CAUTION

Take care not to elongate the stator wire when removing a bushing.

- Use the puller to remove the rear end cover. (Fig. 6D3-14)

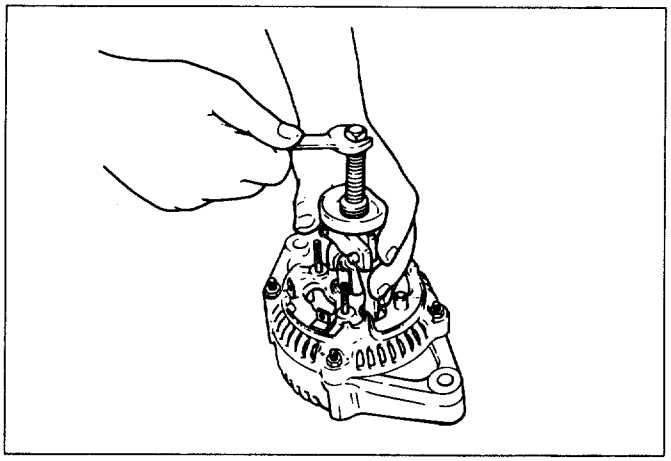

Fig. 6D3-14

9. Rotor assembly

10. Front cover assembly

- Pull the rotor assembly off the front cover assembly using a bench press. (Fig. 6D3-15)

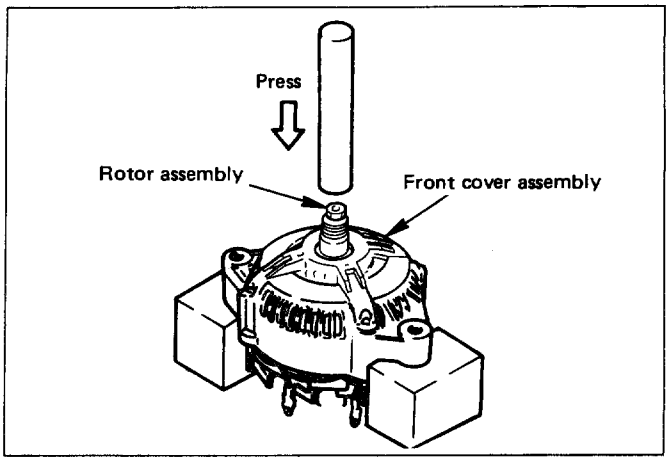

Fig. 6D3-15

INSPECTION AND REPAIR

Repair or replace necessary parts if extreme wear or damage is found during inspection.

ROTOR ASSEMBLY

1. Check the rotor slip ring surfaces for contamination and roughness. If rough, polish with #500-600 sandpaper. (Fig. 6D3-16)

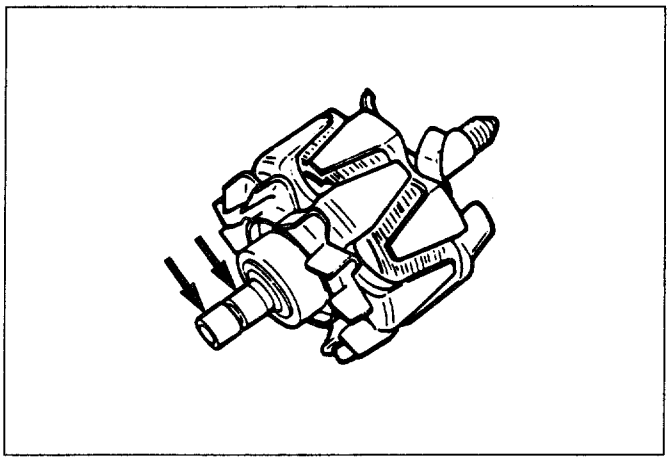

Fig. 6D3-16

2. Measure the slip ring diameter, and replace if it exceeds the limit. (Fig. 6D3-17)

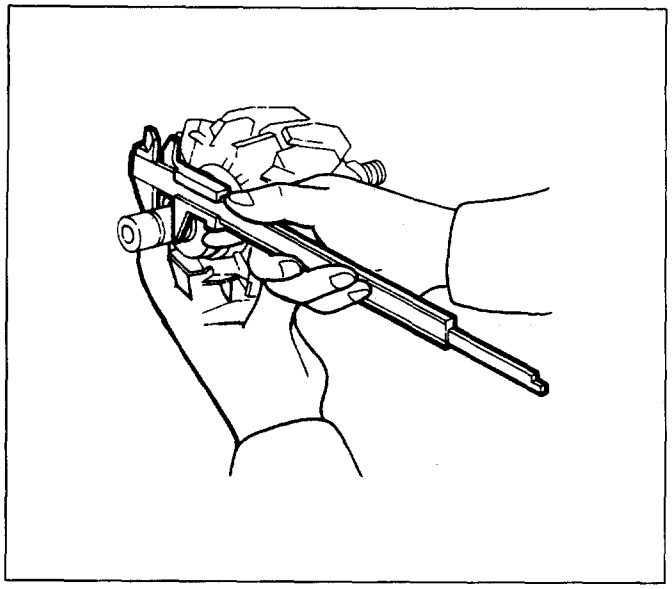

Fig. 6D3-17

mm (in)

Standard	Limit
14.4 (0.51)	12.8 (0.51)

3. Check resistance between slip rings, and replace if there is no continuity. (Fig. 6D3-18)

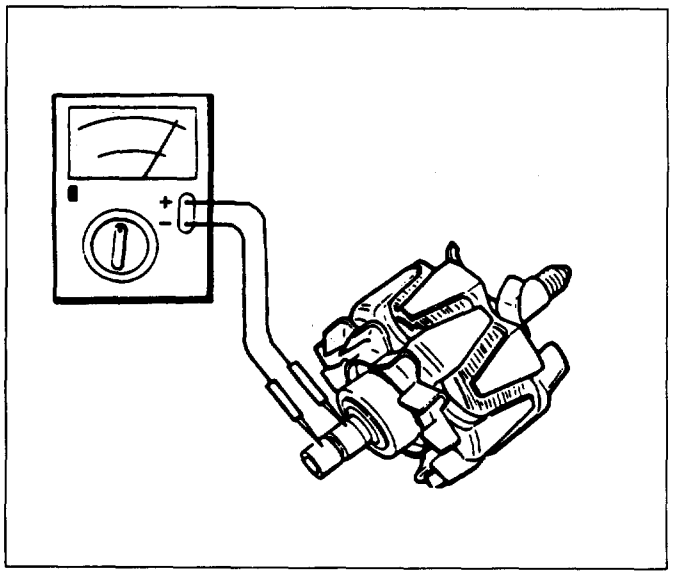

Fig. 6D3-18

Ω

Standard	2.9 or more

4. Check for continuity between slip ring and rotor core. (Fig. 6D3-19)

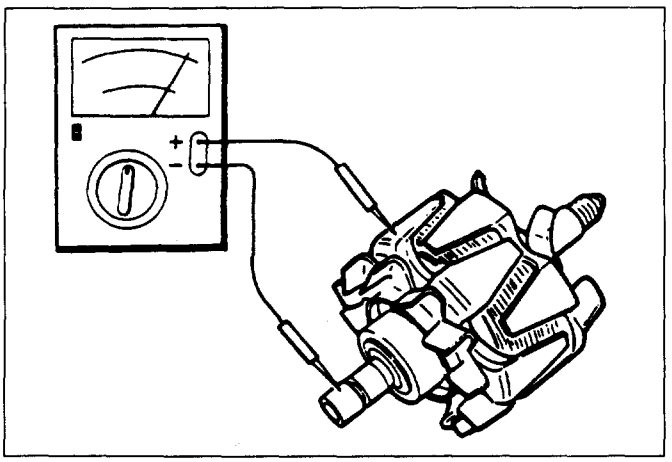

Fig. 6D3-19

In case of continuity, replace the rotor assembly.

STATOR COIL

1. Measure resistance between respective phases. (Fig. 6D3-20)

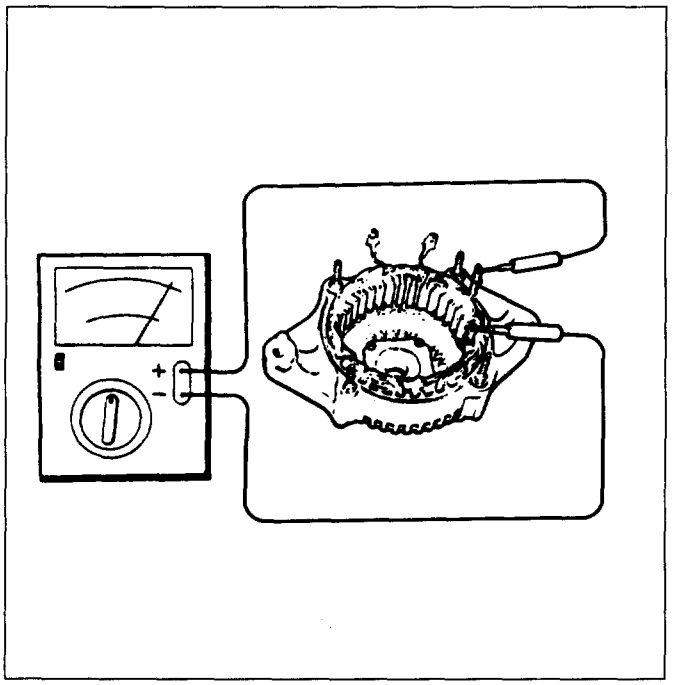

Fig. 6D3-20

Ω

Standard	0.1

2. Measure insulation resistance between stator coil and core with a mega-ohmmeter.

Standard	MΩ	1 or more

If less than standard, replace the coil.

BRUSH

Measure the brush length. (Fig. 6D3-21)

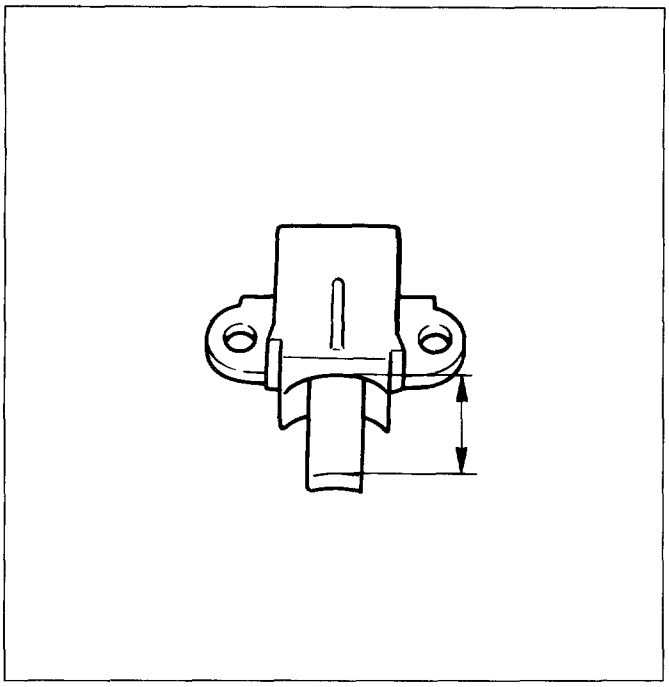

Fig. 6D3-21

mm (in)

Standard	Limit
10.5 (0.41)	8.4 (0.33)

If more than limit, replace the brush.

RECTIFIER ASSEMBLY

Check for continuity across "P" and "E" in the x 100Ω range of multimeter. (Fig.6D3-22)

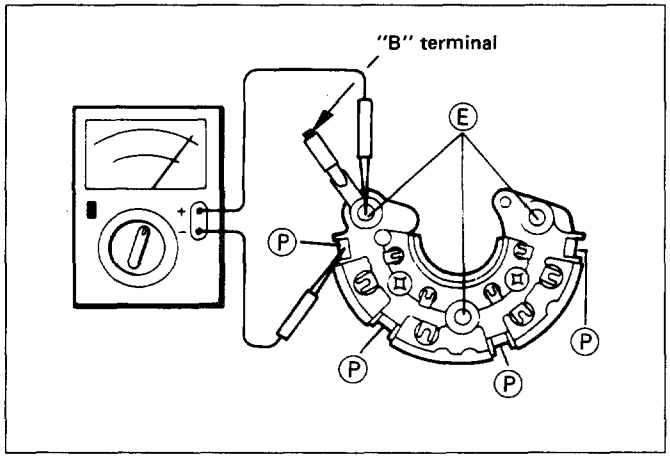

Fig. 6D3-22

- Change polarity, and make sure that there is continuity in one direction, and not in the reverse direction. In case of continuity in both directions, replace the rectifier assembly.

IC REGULATOR ASSEMBLY

Check for continuity across "B" and "F" in the x 100Ω range of multimeter. (Fig. 6D3-23)

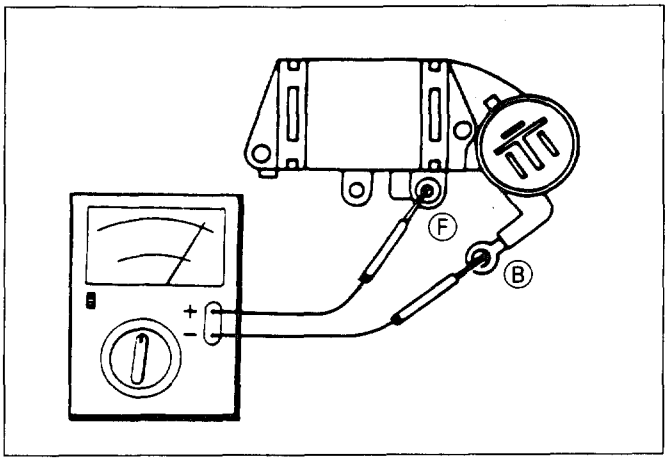

Fig. 6D3-23

- Change polarity, and make sure that there is continuity in one direction, and not in the reverse direction. In case of continuity in both directions, replace the IC regulator assembly.

REASSEMBLY

To reassemble, follow the disassembly steps in the reverse order, noting the following points:

1) Front cover assembly

- Using a press with a socket wrench attached, reassemble rotor and rear end cover assembly in the front cover. (Fig. 6D3-24)

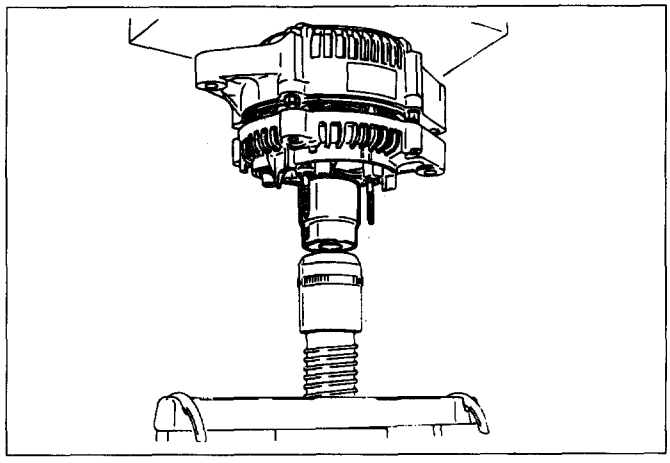

Fig. 6D3-24

2) Pulley nut

1. Install pulley on the rotor. (Fig. 6D3-25)

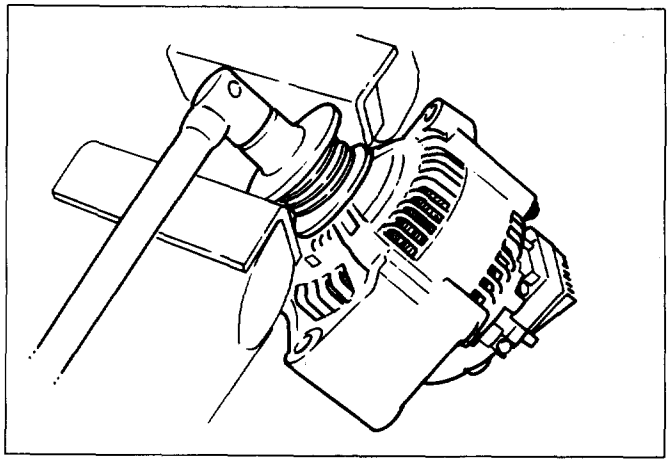

Fig. 6D3-25

2. Cover vise with copper plates, clamp pulley to the vise, and tighten nut to the specified torque.

Torque	N·m (lb·ft)	111 (82)

BENCH TEST

Conduct a bench test of the generator.

Preparation

- Remove generator from the vehicle (see "Generator removal").

1. Secure generator to the bench test equipment and connect wires. (Fig. 6D3-26)

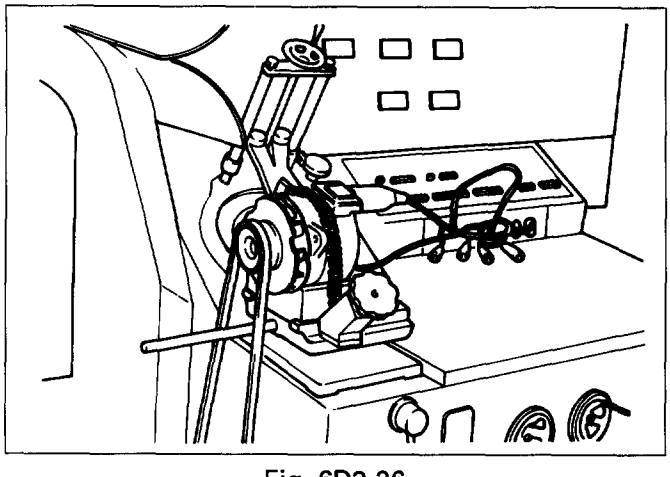

Fig. 6D3-26

Terminal "IG" for energization
Terminal "L" for neutral (warning lamp)
Terminal "B" for output

2. Conduct the generator characteristic test. Characteristics of generator are shown in Fig. 6D3-26.

   Repair or replace the generator if its outputs are abnormal.

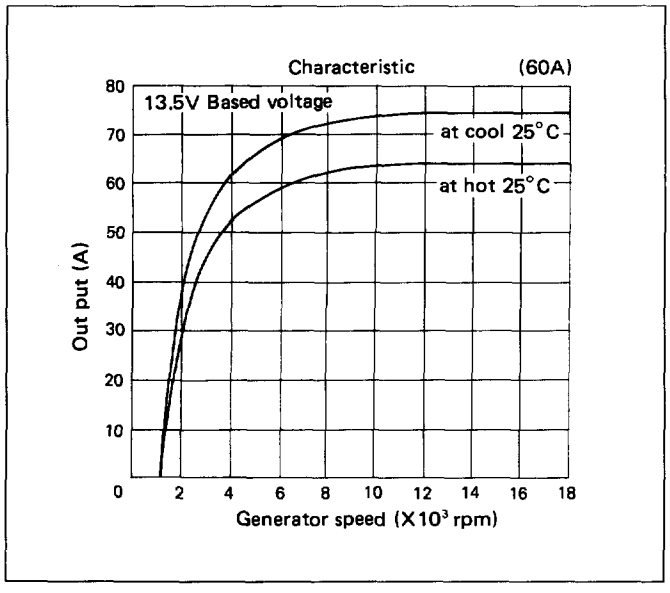

Fig. 6D3-27

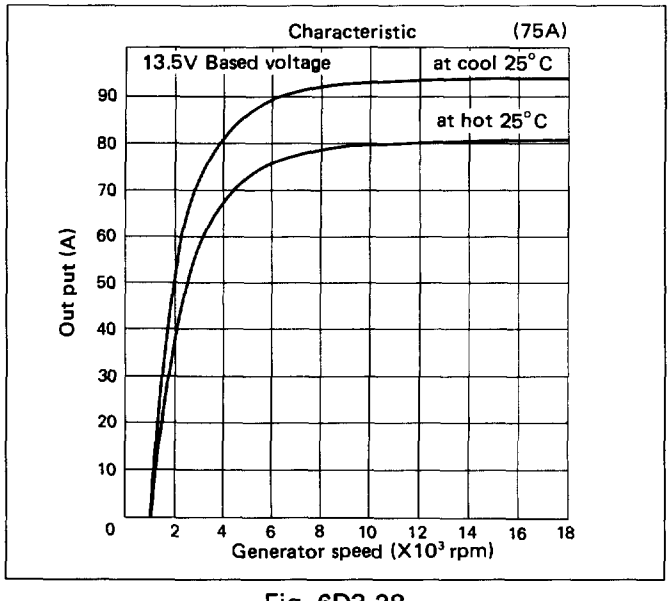

Fig. 6D3-28

Part Number (Nippon Denso)		101211-2020	100211-9730
Model		ACGH03	ACJQ17
Rated voltage	V	12	12
Rated output	A	60	75
Rotating direction (As viewed from pulled)		Clockwise	Clockwise
Pulley effective diameter	mm (in)	50 (1.97)	50 (1.97)
Weight	N (lb)	33 (25)	44 (33)
		M/T (STD)	A/T (STD) M/T (OPTION)

SECTION 6D4

IGNITION SYSTEM

CONTENTS

General Description 6D4-1
Diagnosis 6D4-2
On-Vehicle Service 6D4-3
Spark Plug Wire 6D4-3
Spark Plug 6D4-3
Electronic Ignition (EI) Assembly ... 6D4-5
Crankshaft Position Sensor (CKP sensor) 6D4-5
Torque Specifications 6D4-6
Main Data and Specifications 6D4-7

GENERAL DESCRIPTION

Ignition is done by the Electronic Ignition (EI) that fires directly the ignition plugs from ignition coils through spark plug wires without using a distributor.
A pair of ignition coils for the cylinders having different phases by 360° (No.1 and No.4, No.2 and No.5, No.3 and No.6) are fired simultaneously.
Since the cylinder on exhaust stoke requires less energy to fire its ignition plug, energy from the ignition coils can be utilized to fire the mating cylinder on compression stroke. After additional 360° rotation, respective cylinder stokes are reversed.
The EI consists of three ignition coils, ignition control module, crank angle sensor, Engine Control Module (ECM) and other components.
Module is provided under the ignition coil, connected with ECM by means of 6-pin connector.
The ignition control module turns on/off the primary circuit of ignition coils, and also it controls the ignition timing at the engine speed below 538 rpm.
A notch in the timing disc on the crankshaft activates the crank angle sensor which then sends information such as firing order and starting timing of each ignition coil to the ECM.
Further, the EI employs Ignition Control (IC) to control similar to a distributor system.
By receiving signals such as crank position, engine speed, water temperature and Manifold Absolute Pressure (MAP), the ECM controls the ignition timing.

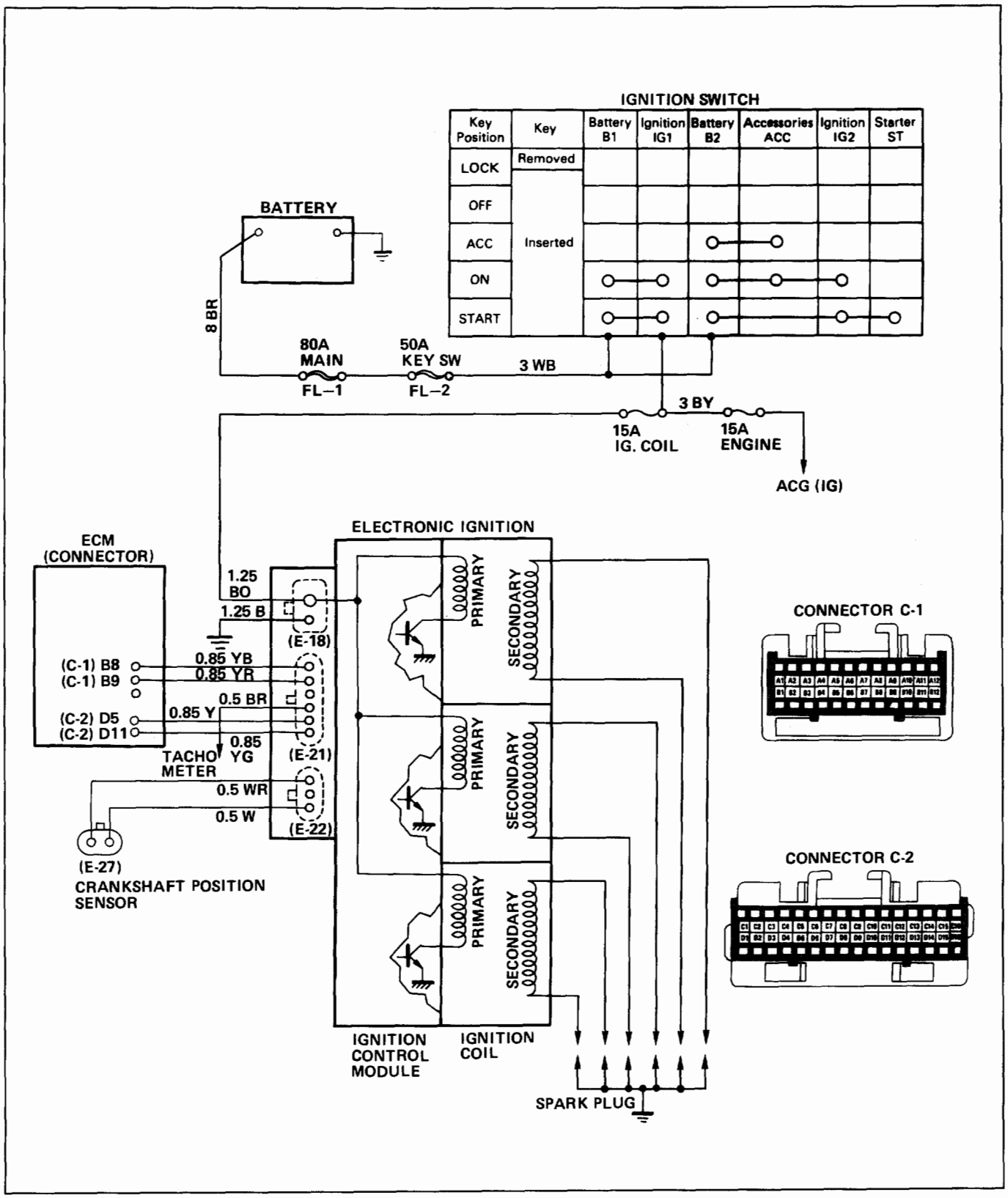

Fig. 6D4-1

DIAGNOSIS

Refer to Section 6E for the diagnosis to the Electronic ignition system (EI system).

ON-VEHICLE SERVICE

SPARK PLUG WIRES

REMOVAL

Preparation

- Disconnect battery ground cable.

1. Spark plug wires (Fig. 6D4-2)

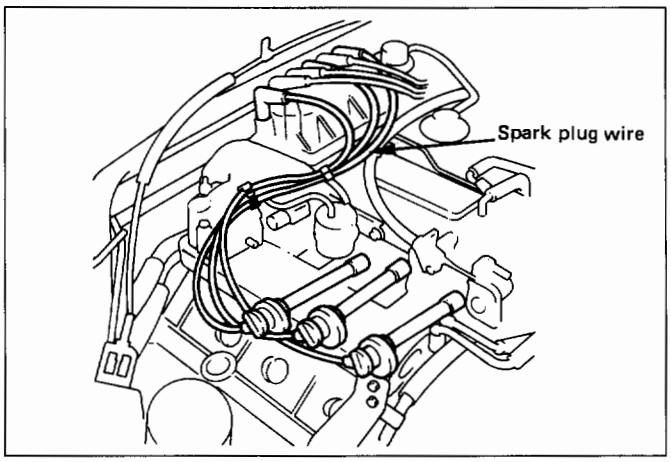

Fig. 6D4-2

INSPECTION AND REPAIR

Check the high tension cable for insulation. Check terminals for corrosion or damage, and replace as necessary.

Measuring resistance of spark plug wires (kΩ)

Spare plug wires	SOHC	DOHC
No. 1 cable	6.4 ~ 14.9	6.2 ~ 14.2
No. 2 cable	5.7 ~ 13.1	7.2 ~ 16.7
No. 3 cable	6.2 ~ 14.4	6.5 ~ 14.9
No. 4 cable	5.8 ~ 13.3	6.8 ~ 15.8
No. 5 cable	6.4 ~ 14.9	6.9 ~ 16.0
No. 6 cable	6.9 ~ 16.0	6.3 ~ 14.5

Measure resistance of spark plug wires, and replace the cable if its value exceeds the standard. (Fig. 6D4-3)

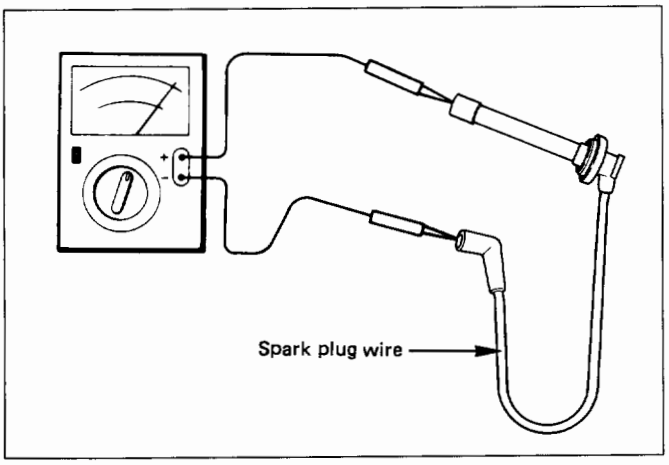

Fig. 6D4-3

INSTALLATION

1. Spark plug wires

- Connect ignition coils and spark plugs with spark plug wires respectively. Match each number (cylinder No.) marked on the ignition coil with that on spark plug wire, and connect each spark plug for the cylinder. (Fig. 6D4-4)

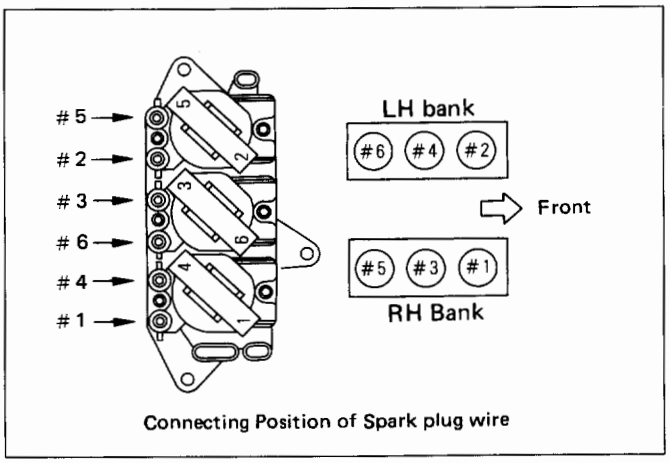

Fig. 6D4-4

- Connect battery ground cable.

CAUTION

Do not cross, twist or pull the spark plug wires.

SPARK PLUG

REMOVAL

1. Spare plug wires

2. Spark plugs (Fig. 6D4-5)

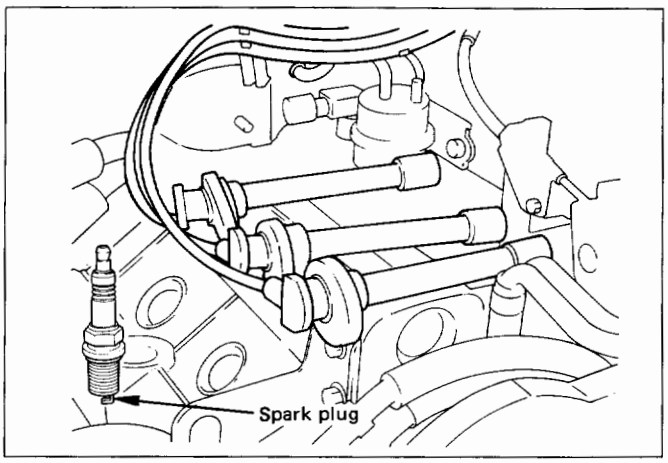

Fig. 6D4A-5

INSPECTION AND REPAIR

The spark plug affects entire engine performance and therefore its inspection is very important.

- Check electrode and insulator for presence of crack, and replace if any.
- Check electrode for wear, and replace if necessary.
- Check gasket for damage, and replace if necessary.
- Measure insulation resistance with an ohmmeter, and replace if faulty.
- Adjust spark plug gap to 1.0(0.04) ~ 1.1(0.043) mm(in).
- Check fuel and electrical systems if spark plug is extremely dirty.
- Use spark plugs having low heat value (hot type plug) if fuel and electrical systems are normal.
- Use spark plugs having high heat value (cold type plug) if insulator and electrode are extremely burned.

Sooty spark plugs

Much deposit of carbon or oil on the electrode and insulator of spark plug reduces the engine performance.

Possible causes:

- Too rich mixture
- Retarded ignition timing
- Presence of oil in combustion chamber
- Incorrectly adjusted spark plug gap

Burning electrodes

This fault is characterized by scorched or heavily oxidized electrode or blistered insulator nose.

Possible causes:

- Too lean mixture
- Advanced ignition timing
- Improper heat value

Measuring Insulation Resistance

- Measure insulation resistance using a 500 volt megaohm meter. (Fig. 6D4-6)

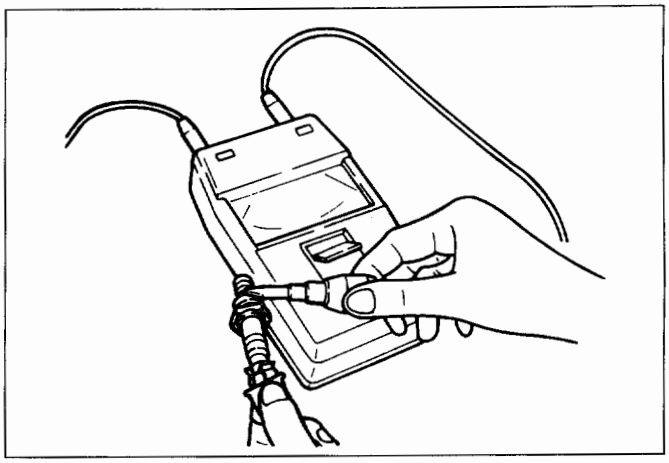

Fig. 6D4-6

- Replace spark plugs if measured value is out of standard.

Insulation resistance	MΩ	50 or more

Cleaning Spark Plugs

- Clean spark plugs with a spark plug cleaner.
- Raise the ground electrode to an angle of 45 to 60 degrees. If electrode is wet, dry it before cleaning.
- After spark plug is thoroughly cleaned, check insulator for presence of crack.
- Clean threads and metal body with a wire brush.
- File the electrode tip if electrode is extremely worn.
- Bend the ground electrode to adjust the spark plug gap. (Fig. 6D4-7)

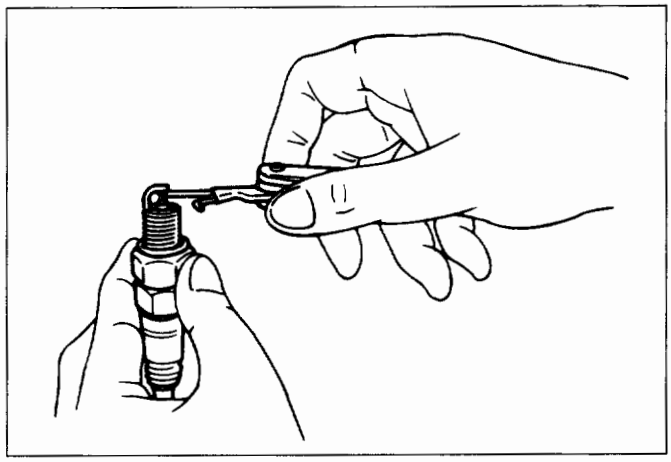

Fig. 6D4-7

INSTALLATION

2. **Spark plugs**
   - Tighten spark plugs to the specified torque.
1. **Spark plug wires**
   - Connect high tension cables to correct terminals respectively.

Torque	N·m (lb·ft)	18 (13)

ELECTRONIC IGNITION (EI) ASSEMBLY

REMOVAL

Preparation

- Disconnect battery ground cable

1. **Spark plug wires**
2. **Wiring connectors**
   - Disconnect connectors on Engine Control Module (ECM), power supply and crank angle sensor.
3. **Electronic Ignition (EI) assembly**
   - Remove three fixing bolts, then the EI assembly. (Fig. 6D4-8)

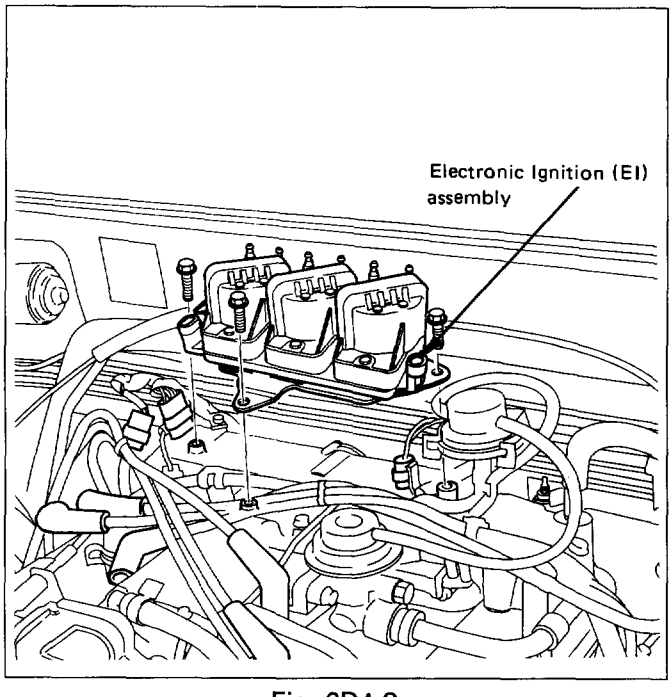

Fig. 6D4-8

INSTALLATION

3. **Electronic Ignition (EI) assembly**

Torque	N·m (lb·ft)	19 (14)

2. **Wiring connector**
   Connect connectors to ECM, power supply and crank angle sensor.
1. **Spark plug wires**
   - Connect Spark plug wires to correct terminals.
   - Connect battery ground cable.

CRANKSHAFT POSITION SENSOR (CKP Sensor)

REMOVAL

Preparation

- Disconnect battery ground cable
- Remove exhaust & transfer protector
- Disconnect front propeller shaft joint. (Fig. 6D4-9)

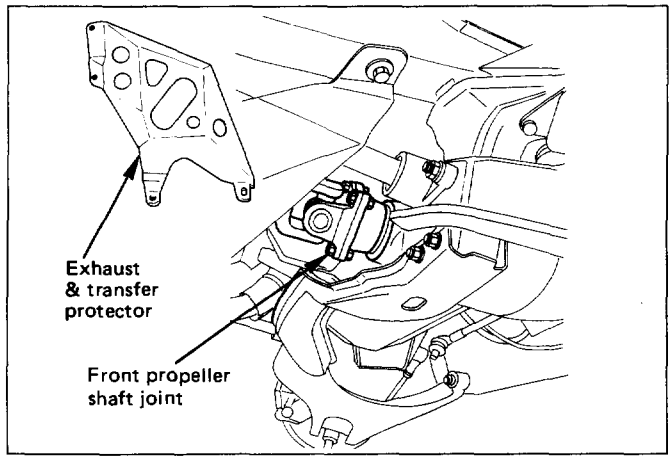

Fig. 6D4-9

1. **Wiring connector**
2. **Mounting nut**
3. **Crankshaft position sensor (CKP sensor) (Fig. 6D4-10)**

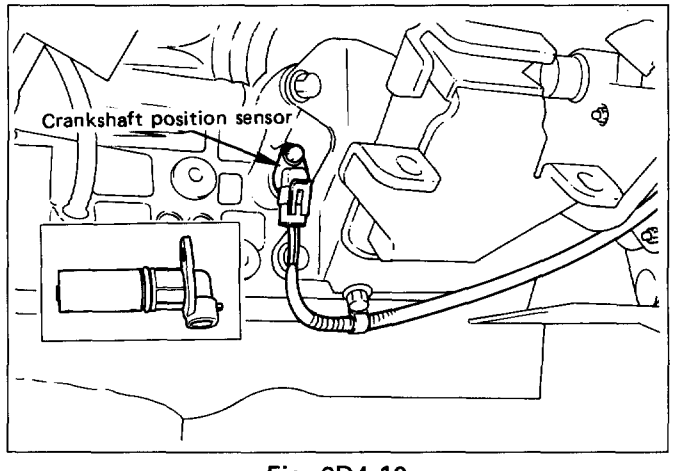

Fig. 6D4-10

INSTALLATION

3. Crankshaft Position Sensor (CKP sensor)

- Install crankshaft position sensor into the cylinder block.

Before installation, apply small amount of engine oil to the O-ring.

Torque	N·m (lb·in)	10 (87)

2. Mounting bolt

- Tighten the bolt to the specified torque.

Torque	N·m (lb·ft)	63 (46)

1. Wiring connector

- Connect front propeller shaft joint and tighten to the specified torque.
- Connect battery ground cable.
- Tighten the exhaust & transfer protector fixing bolt to the specified torque

Torque	N·m (lb·ft)	37 (27)

TORQUE SPECIFICATIONS

N·m (lb·ft)

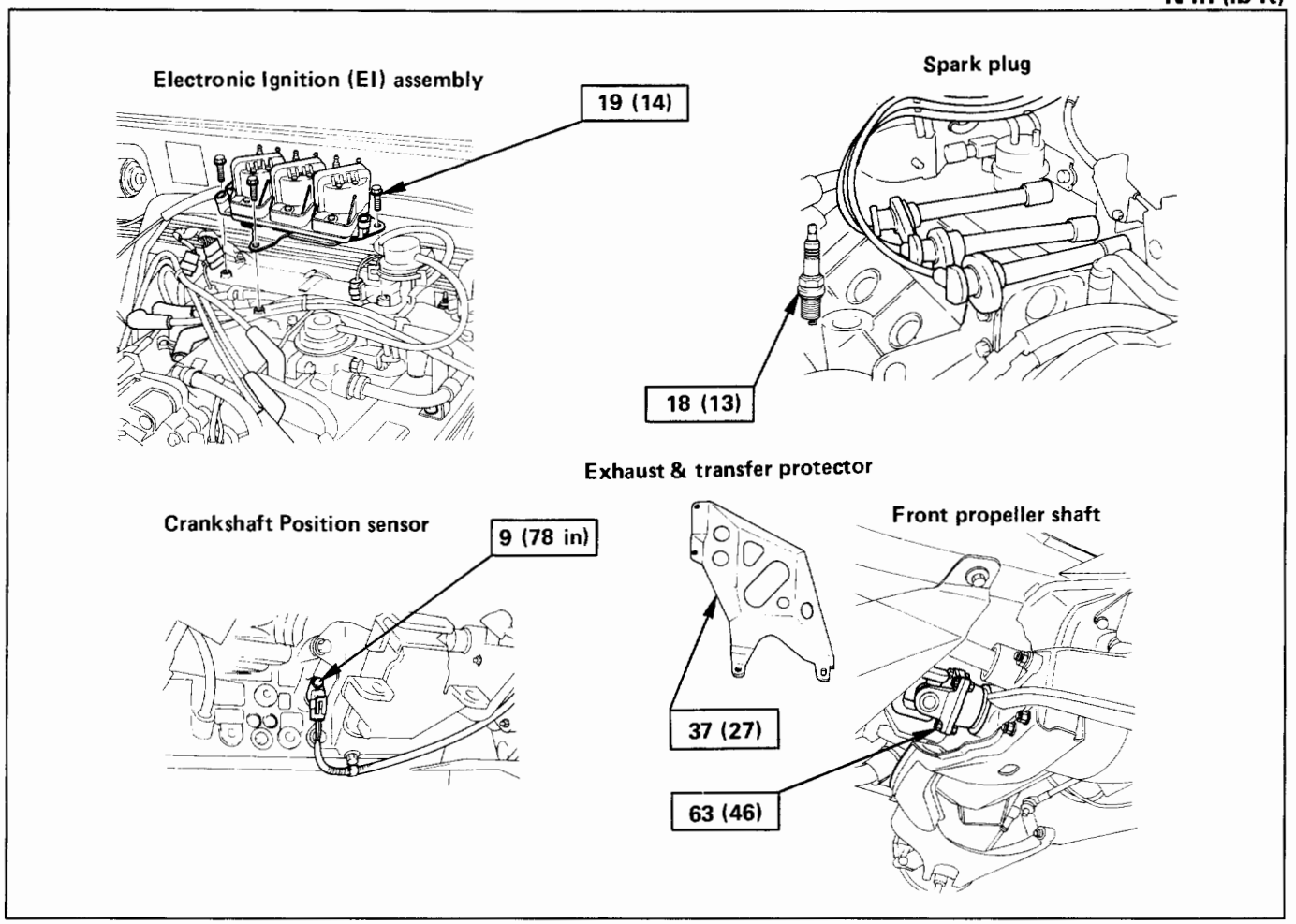

Fig. 6D4-11

MAIN DATA AND SPECIFICATIONS

Ignition System	
Ignition Form	Electronic Ignition System (EI system) with Crankshaft Position Sensor (CKP sensor)
Spark Plug	
Type	FR2LS. BKR6E-11. K20PR-U11 FR3LS. BKR5E-11. K16PR-U11
Plug gap mm (in)	1.0 (0.04) ~ 1.1 (0.043)
Torque N·m (lb·ft)	19 (14)

MEMO

SECTION 6E2

DRIVEABILITY AND EMISSION

CONTENTS

Driveability and Emission General Information 6E2- 2
Section A — Engine Components/Wiring Diagrams/ Diagnostic Charts 6E2-23
Section B— Driveability Symptoms 6E2-89
Section C— Component Systems 6E2-99

DRIVEABILITY AND EMISSIONS GENERAL INFORMATION

CONTENTS

General Information
- Driveability . . . . . 6E2— 3
- Emissions . . . . . 6E2— 3
- Maintenance Schedule . . . . . 6E2— 3
- Introduction . . . . . 6E2— 3
  - Electronic Engine Control . . . . . 6E2— 3
  - What This Section Contains . . . . . 6E2— 3
  - Blocking Drive Wheels . . . . . 6E2— 3
- Visual/Physical Underhood Inspection . . . . . 6E2— 3
- Basic Knowledge required . . . . . 6E2— 4
  - Basic Electric Circuits . . . . . 6E2— 4
  - Use of Circuit Testing Tools . . . . . 6E2— 4
  - Use of Digital Volt-Ohm Meter (DVOM). 6E2— 4
- Diagnostic Information . . . . . 6E2— 4
  - "Check Engine" Malfunction Indicator Lamp (MIL) . . . . . 6E2— 4
  - Intermittent "Check Engine" Malfunction Indicator Lamp (MIL) . . 6E2— 4
  - Reading Diagnostic Trouble Codes . . . 6E2— 5
  - Clearing Trouble Codes . . . . . 6E2— 5
  - Diagnostic Test Mode . . . . . 6E2— 5
  - Engine Control Module Learning Ability . . . . . 6E2— 6
  - Field Service Mode . . . . . 6E2— 6
  - Standard Nomenclature for Certain Electrical/Electronic Components and Systems . . . . . 6E2— 6

Abbreviations and Glossary of Terms . . . . . 6E2— 11

Driveability and Emissions
- Section Summary . . . . . 6E2— 12
- Section "A" Diagnostic Procedure Summary . . . . . 6E2— 13
- Data Link Connector "SCAN Tools" . . . . . 6E2— 14
- Data List (FO) . . . . . 6E2— 14
- "SCAN Tool" Limitations and Use . . . . . 6E2— 14
  - Intermittent Conditions . . . . . 6E2— 14
- "SCAN Tool" Positions . . . . . 6E2— 14
  - Injector Pulse Width . . . . . 6E2— 14
  - Closed Loop/Open Loop . . . . . 6E2— 14
  - Trouble Codes . . . . . 6E2— 14
  - Throttle Position (TP) Sensor . . . . . 6E2— 14
  - Throttle Angle . . . . . 6E2— 15
  - Heated Oxygen Sensor (HO2S) . . . . . 6E2— 15
    - Vehicle Speed Sensor (VSS) . . . . . 6E2— 15
    - Programmable Read Only Memory ID . 6E2— 15
    - Revolution Per Minute (RPM) . . . . . 6E2— 15
    - Mile Per Hour (MPH) . . . . . 6E2— 15
    - Engine Coolant Temperature (ECT) . . . 6E2— 15
    - Intake Air Temperature (IAT) Sensor . . . . . 6E2— 15
    - Manifold Absolute Pressure (MAP) . . . 6E2— 15
    - Barometric Pressure (BARO) . . . . . 6E2— 15
    - Exhaust Gas Recirculation (EGR) (ON/OFF) . . . . . 6E2— 15
    - Short Term (S.T.) Fuel Trim and Long Term (L.T.) Fuel Trim . . . . . 6E2— 15
    - Long Term (L.T.) Fuel Trim . . . . . 6E2— 16
    - Idle Air Control (IAC) Counts . . . . . 6E2— 16
    - Desired Revolution Per Minute . . . . . 6E2— 16
    - Air Conditioning (A/C) Request . . . . . 6E2— 16
    - Air Conditioning (A/C) Clutch . . . . . 6E2— 16
    - Power Steering Pressure (PSP) Switch . . . . . 6E2— 16
    - Battery Positive Voltage . . . . . 6E2— 16
    - Spark Advance . . . . . 6E2— 16
    - Start Up Engine Coolant . . . . . 6E2— 16
    - Engine Speed (RPM) . . . . . 6E2— 16
    - Fuel Trim Enable . . . . . 6E2— 16
    - Air/Fuel Ratio . . . . . 6E2— 16
    - Induction Air Control . . . . . 6E2— 16
  - Section B — Driveability Symptoms . . . . 6E2— 16
  - Section C — Component Systems . . . . . 6E2— 16
    - Engine Control Module (ECM) and Sensors . . . . . 6E2— 17
    - Fuel Control System . . . . . 6E2— 17
    - Electric Fuel Pump (in-tank) . . . . . 6E2— 17
    - Evaporative Emission (EVAP) Control System. . . . . 6E2— 17
    - Ignition Control (IC) . . . . . 6E2— 17
    - Exhaust Gas Recirculator (EGR) . . . . . 6E2— 17
    - Air Conditioning (A/C) Clutch Control . 6E2— 17
    - Positive Crankcase Ventilation (PCV) . 6E2— 17

Tools Needed to Service the System . . . . . 6E2— 18

General Specifications . . . . . 6E2— 21

Vacuum Hose Routing Diagram . . . . . 6E2— 22

ALL NEW ISUZU VEHICLES ARE CERTIFIED BY THE UNITED STATES ENVIRONMENTAL PROTECTION AGENCY AS CONFORMING TO THE REQUIREMENTS OF THE REGULATIONS FOR THE CONTROL OF AIR POLLUTION FROM NEW MOTOR VEHICLES. THIS CERTIFICATION IS CONTINGENT ON CERTAIN ADJUSTMENTS BEING SET TO FACTORY STANDARDS. IN MOST CASES, THESE ADJUSTMENT POINTS EITHER HAVE BEEN PERMANENTLY SEALED AND/OR MADE INACCESSIBLE TO PREVENT INDISCRIMINATE OR ROUTINE ADJUSTMENT IN THE FIELD. FOR THIS REASON, THE FACTORY PROCEDURE FOR TEMPORARILY REMOVING PLUGS, CAPS, ETC., FOR PURPOSES OF SERVICING THE PRODUCT, MUST BE STRICTLY FOLLOWED AND, WHEREVER PRACTICABLE, RETURNED TO THE ORIGINAL INTENT OF THE DESIGN.

GENERAL INFORMATION

DRIVEABILITY

The driveability diagnosis procedures apply to various systems in current ISUZU vehicles. The procedures assume that the vehicle is worked on properly at one time and the problem is due to time, wear, dirt or other causes. Start with the introduction that follows. This will describe a systematic diagnostic procedure.
Any system disconnected during diagnosis should be reconnected. This includes wires, hoses, linkage, etc.

EMISSIONS

The exhaust emission control systems used on ISUZU engines perform a specific function to lower exhaust emissions while maintaining good fuel economy and driveability.

MAINTENANCE SCHEDULE

Refer to the Maintenance Schedule in Section "0B" General Information for the maintenance service that should be performed to retain emission control performance.

INTRODUCTION

ELECTRONIC ENGINE CONTROL

All engines have an Engine Control Module (ECM) to control the fuel system. The ECM varies the air/fuel ratio by controlling the fuel flow through the injectors.
In addition, the ECM controls the ignition timing, fuel pump, and various other systems.
It is important to review the component sections and wiring diagrams in this Section for specific components controlled by the ECM and what systems are non-ECM controlled.

WHAT THIS SECTION CONTAINS

Each ISUZU engine has system controls to reduce exhaust emissions while maintaining good driveability and fuel economy.
This Section explains:

- How to use the Driveability and Emission Section "6E2" engines.
- A brief description of systems used to control fuel and emissions.
- Abbreviations that are used in Driveability and Emissions.
- Special tools used to diagnosis and repair a system.

Before checking the system, adhere to the following information:

BLOCKING DRIVE WHEELS

The vehicle drive wheels should always be blocked, and parking brake firmly set, while checking the system.

VISUAL/PHYSICAL UNDERHOOD INSPECTION

A careful visual and physical underhood inspection must be performed as part of any diagnostic procedure or in finding the cause of an emissions test failure. This can often lead to fixing a problem without further steps. Inspect all vacuum hoses for correct routing, pinches, cuts, or disconnections. Be sure to inspect hoses that are difficult to see beneath the throttle body and common chamber. Inspect all the wires in the engine compartment for correct and good connections, burned or chaffed spots, pinched wires, or contact with sharp edges or hot exhaust manifolds. This visual/physical inspection is very important. It must be done carefully and thoroughly.

BASIC KNOWLEDGE REQUIRED

Before using this section of the Service Manual, there are some areas that you should be familiar with. Without this basic knowledge, you will have trouble using the diagnostic procedures contained in this section.

BASIC ELECTRIC CIRCUITS

You should understand the basic theory of electricity, and know the meaning of voltage, amps, and ohms. You should understand what happens in a circuit with an open or a shorted wire. You should be able to read and understand a wiring diagram. A short to ground is referred to as a ground to distinguish it from a short between wires.

USE OF CIRCUIT TESTING TOOLS

You should know how to use a test light, how to connect and use a tachometer, and how to use jumper wires to by-pass components to test circuits. Care should be taken to not deform the terminal when testing.

USE OF DIGITAL VOLT-OHM METER (DVOM)

You should be familiar with the Digital Volt-Ohm Meter, particularly special tool J-39200 or equivalent. You should be able to measure voltage, resistance, and current and know how to use the meter correctly.
The Digital Volt-Ohm Meter is covered in the "Special Tools" portion of this section.

DIAGNOSTIC INFORMATION

The diagnostic "Trouble Tree" charts and functional checks in this manual are designed to locate a faulty circuit or component through logic based on the process of elimination. The charts are prepared with the requirement that the vehicle functioned correctly at the time of assembly and that there are no multiple failures.
The Engine Control Module (ECM) performs a continual self-diagnosis on certain control functions. This diagnostic capability is complemented by the diagnostic procedures contained in this manual. The ECM's language for communicating the source of a malfunction is a system of Diagnostic Trouble Codes (DTCs). The DTC(s) are two or three digit numbers that can range from12 to 51. When a malfunction is detected by the ECM, a DTC is set and the Malfunction Indicator Lamp is illuminated.

"CHECK ENGINE" MALFUNCTION INDICATOR LAMP (MIL)

This light is on the instrument panel and has two functions:

- It is used to tell the driver that a problem has occurred, and that the vehicle should be taken for service as soon as reasonably possible.
- It is used by the technician to read out "Trouble Codes" to help diagnose system problems.

As a bulb and system check, the light will come "ON" with the key "ON" and the engine not running. When the engine is started, the light will turn off. If the light remains on, the self-diagnostic system has detected a problem. If the problem goes away, the light will go out in most cases after 10 seconds, but a Trouble Code will remain stored in the ECM.
When the light remains "ON" while the engine is running, or when a malfunction is suspected due to a driveability or emissions problem, a on-board diagnostic system check must be performed. The procedures for these checks are given in Section "A". These checks will expose malfunctions which may not be detected if other diagnostics are performed prematurely.

INTERMITTENT "CHECK ENGINE" MALFUNCTION INDICATOR LAMP (MIL)

In the case of an "intermittent" problem, the "Check Engine" malfunction indicator lamp will light for ten (10) seconds and then will go out. However, the corresponding trouble code will be stored in the memory of the ECM until the battery positive voltage to the ECM has been removed. When unexpected DTC(s) appear during the DTC code reading process, one can assume that these DTC(s) were set by an intermittent malfunction and could be helpful in diagnosing the system.
An intermittent DTC may or may not re-set. If it is an intermittent failure, a DTC Chart is not used. Consult the "Diagnostic Aids" on the intermittent trouble code. Section "B" also covers the topic of "intermittents". A physical inspection of the applicable sub-system most often will resolve the problem.

READING DIAGNOSTIC TROUBLE CODES (Fig. 6E2-1)

The provision for communicating with the Engine Control Module (ECM) is the Data Link Connector (DLC) (See Fig. 6E2-1). The DLC is located behind the lower front instrument panel. It is used in the assembly plant to receive information in checking that the engine is operating properly before it leaves the plant. The diagnostic trouble code(s) (DTCs) stored in the ECM's memory can be read either through a hand-held diagnostic scannner plugged into the DLC or by counting the number of flashes of the "Check Engine" Malfunction Indicator Lamp (MIL) when the diagnostic test terminal of the DLC is grounded. The DLC terminal "1" (diagnostic request) is pulled "Low" (grounded) by jumpering to DLC terminal "3", which is a ground wire. This will signal the ECM that you want to "flash" DTC(s), if any are present. Once terminals "1" and "3" have been connected, the ignition switch must be moved to the "ON" position, with the engine *not* running. At this point, the "Check Engine" MIL should flash DTC 12 three times consecutively. This would be the following flash, sequence: "flash, pause, flash-flash, long pause, flash, pause, flash-flash, long pause, flash, pause, flash-flash". DTC 12 indicates that the ECM's diagnostic system is operating. If DTC 12 is not indicated, a problem is present within the diagnostic system itself, and should be addressed by consulting the appropriate diagnostic chart in DRIVEABILITY AND EMISSIONS (SECTION 6E2-A).

Following the output of DTC 12, the "Check Engine" MIL will indicate a DTC three times if a DTC is present, or it will simply continue to output DTC 12. If more than one DTC has been stored in the ECM's memory, the DTC(s) will be output from the lowest to the highest, with each DTC being displayed three times.

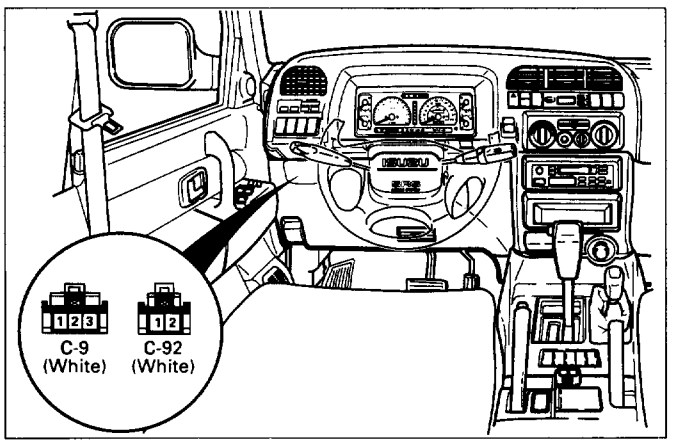

~~Fig. 6E2-1~~

CAPTION: DATA LINK [illegible]

CLEARING TROUBLE CODES

When the ECM sets a trouble code, the "Check Engine" MIL will come "ON" and a trouble code will be stored in memory. If the problem is intermittent, the light will go out after 10 seconds, when the fault goes away. However, the trouble code will stay in the ECM memory until the battery positive voltage to the ECM is removed. Removing battery positive voltage for 30 seconds will clear all stored trouble codes.

Trouble Codes should be cleared after repairs have been completed. Also, some Diagnostic Charts will tell you to clear the DTC(s) before using the chart. This allows the ECM to set the DTC while going through the chart, which will help to find the cause of the problem more quickly.

CAUTION:

To prevent ECM damage, the key must be "OFF" when disconnecting or reconnecting power to ECM (for example battery cable, ECM pigtail, ECM fuse, jumper cables, etc.)

When using a hand-held diagnostic scanner, or "Scan tool" to read the DTC(s), clearing the DTC(s) is done in the same manner as in the above procedure.

DIAGNOSTIC TEST MODE

When the diagnostic test terminal is grounded with the ignition "ON" and the engine "OFF", the system will enter what is called the Diagnostic Test Mode. In this diagnostic test mode the ECM will:

1. Flash the "Check Engine" MIL "ON" and "OFF" rapidly (indicating the system is operating correctly).
2. Display any stored trouble codes by flashing the "Check Engine" MIL. Each DTC will be flashed three times, then DTC 12 will be flashed again.
3. Energize all ECM controlled relays and solenoids except fuel pump relay. This allows checking circuits which may be difficult to energize without driving the vehicle and being under particular operating conditions.
4. The idle air control valve moves to its fully extended position on most models, blocking the idle air passage. This is useful in checking the minimum idle speed.

ENGINE CONTROL MODULE (ECM) LEARNING ABILITY

The Engine Control Module (ECM) has a "learning" ability which allows it to make corrections for minor variations in the fuel system to improve driveability. If the battery is disconnected to clear diagnostic codes, or for repair, the "learning" process has to begin all over again. A change may be noted in the vehicle's performance. To "teach" the vehicle, make sure the engine is at operating temperature, and drive at part throttle, with moderate acceleration and idle conditions, until normal performance returns.

FIELD SERVICE MODE

If the diagnostic test terminal is grounded with the engine running, the system is in "Open" or "Closed Loop".

In "Open Loop" the "Check Engine" malfunction indicator lamp flashes two and one-half times per seconds.

In "Closed Loop", the light flashes once per second.

Also, in "Closed Loop", the light will stay "OFF" most of the time if the system is too lean. It will stay "ON" most of the time if the system is too rich.

While the system is in Field Service Mode, the ECM will be in the following diagnostic test mode:

1. New trouble codes cannot be stored in the ECM.
2. The closed loop timer is bypassed.

STANDARD NOMENCLATURE FOR CERTAIN ELECTRICAL/ELECTRONIC COMPONENTS AND SYSTEMS

Starting with the 1993 model, Isuzu Motors will be complying with the Society of Automotive Engineers (SAE) Recommended Practice J 1930. J 1930 is an industry wide standard that was adopted into government regulations and requires certain electrical and electronic components and systems be known by the same nomenclature that have the same function. This standard is also being applied to abbreviations and acronyms.

This standard is being used in all 1993 service publications.

To make this standard work, some names and abbreviations are being replaced with those recommended by the SAE Standard. What follows is a partial listing of former ISUZU names and abbreviations besides the new ISUZU names and abbreviations.

Former ISUZU Name	New ISUZU Name Term
3Gr	Third Gear - 3GR
3rd Gear	Third Gear - 3GR
4Gr	Fourth Gear - 4GR
4th Gear	Fourth Gear - 4GR
A/C	Air Conditioning - A/C
A/C Relay	Air Conditioning Relay - A/C Relay
Absolute Presure Sensor	Manifold Absolute Pressure Sensor - MAP Sensor
AC	Air Conditioning - A/C
AC Generator	Generator - GEN
ACC	Air Conditioning - A/C
Accel	Accelerator Pedal - AP
Accelerator	Accelerator Pedal - AP
ACG	Generator - GEN
Air Cleaner Element(s)	Air Cleaner Filter - ACL Filter
Air Cleaner Filter Element	Air Cleaner Filter - ACL Filter
Air Conditioning	Air Conditioning - A/C
Air Injection Reaction System	Secondary Air Injection System - AIR System
ALDL	Data Link Connector - DLC
ALDL Diagnostic Connector	DLC Diagnostic Connector - DLC Diagnostic Connector

Former ISUZU Name	New ISUZU Name Term
ALT	Generator - GEN
Alternator	Generator - GEN
Assembly Line Communication Link	Data Link Connector - DLC
Assembly Line Data Link	Data Link Connector - DLC
Assembly Link Diagnostic Link	Data Link Connector - DLC
Backpressure Transducer	Backpressure Transducer- BPT
BARO	Barometric Pressure - BARO
Baro	Barometric Pressure - BARO
Battery Voltage	Battery Positive Voltage - B+
Battery Voltage Correction Mode	Battery Positive Voltage Correction Mode - B+ Correction Mode
Battery Volts	Battery Positive Voltage - B+
BP Sensor	Barometric Pressure Sensor - BARO Sensor
C.E. Light	Malfunction Indicator Lamp - MIL
CAL-PAK	Electronically Erasable Programmable Read Only Memory - EEPROM
CAL-PAK	Programmable Read Only Memory - PROM
Calibration Pack	Electronically Erasable Programmable Read Only Memory - EEPROM
Calibration Pack	Programmable Read Only Memory - PROM
Cam Angle Sensor	Camshaft Position Sensor - CMP Sensor
Cam Sensor	Camshaft Position Sensor - CMP Sensor
Camshaft Sensor	Camshaft Position Sensor - CMP Sensor
Canister Purge	Evaporative Emission Canister Purge - EVAP Canister Purge
Catalytic Converter	Three Way Catalytic Converter - TWC
Check Engine	Malfunction Indicator Lamp - MIL
Check Engine Indicator	Malfunction Indicator Lamp - MIL
Check Engine Light	Malfunction Indicator Lamp - MIL
Code	Diagnostic Trouble Code - DTC
Computer Command Control	Engine Control Module - ECM
Computer Controlled Coil Ignition	Electronic Ignition - EI
Controlled Canister Purge	Evaporative Emission Canister Purge - EVAP Canister Purge
Converter	Three Way Catalytic Converter - TWC
Coolant	Engine Coolant - EC
Coolant Level	Engine Coolant Level - ECL
Coolant Level Sensor	Engine Coolant Level Sensor - ECL Sensor
Coolant Sensor	Engine Coolant Temperature Sensor - ECT Sensor
Coolant Temp. Sensor	Engine Coolant Temperature Sensor - ECT Sensor
Coolant Temperature	Engine Coolant Temperature - ECT
Coolant Temperature Sensor	Engine Coolant Temperature Sensor - ECT Sensor
Coolant Temperature Switch	Engine Coolant Temperature Switch - ECT Sensor
Crank RPM	Engine Speed - RPM
Crank Sensor	Crankshaft Position - CKP

Former ISUZU Name	New ISUZU Name Term
Crankshaft Reference Signal	Crankshaft Position - CKP
Crankshaft Sensor	Crankshaft Position Sensor - CKP Sensor
Crankshaft Speed	Engine Speed - RPM
Crankshaft Speed Sensor	Engine Speed Sensor - RPM Sensor
CTS	Engine Coolant Temperature Sensor - ECT Sensor
D.I.S	Electronic Ignition - EI
Detonation Sensor	Knock Sensor - KS
Diagnostic Circuit Check	On-Board Diagnostic System Check - OBD System Check
Diagnostic Code	Diagnostic Trouble Code - DTC
Diagnostic Mode	Diagnostic Test Mode - DTM
Diagnostic Terminal	Diagnostic Test Terminal - DTT
Digital Electronic Fuel Injection	Multiport Fuel Injection - MFI
Digital Fuel Injection	Multiport Fuel Injection -MFI
Digital Fuel Injection	Sequential Multiport Fuel Injection - SFI
Direct Ignition Systme	Electronic Ignition System - EI System
DIS	Electronic Ignition - EI
DIS Module	Ignition Control Module - ICM
DIS Reference	Electronic Ignition Reference - EI Reference
Distributor HEI Module	Distributor Ignition Control Module - DI Control Module
Distributorless Ignition System	Electronic Ignition System - EI System
ECM	Engine Control Module - ECM
ECM Controlled Air Conditioning	Air Conditioning Compressor Clutch Control System - A/C Compressor Clutch Control System
ECU	Transmission Control Module - TCM
EECS	Evaporative Emission - EVAP
EEPROM	Electrically Erasable Programmable Read Only Memory - EEPROM
EFI	Throttle Body Fuel Injection - TBI
EGR	Exhaust Gas Recirculation -EGR
EGR B/P Transducer	EGR Backpressure Transducer - EGR BPT
EGR Valve	Exhaust Gas Recirculation Valve - EGR Valve
Electronic Control Module	Engine Control Module - ECM
Electronic Control Unit	Powertrain Control Module - PCM
Electronic Engine Control Module	Engine Control Module - ECM
Electronic Fuel Injection	Multiport Fuel Injection - MFI
Electronic Spark Control Circuit	Knock Sensor Circuit - KS Circuit
Electronic Spark Control System	Knock Sensor System - KS System
Electronic Spark Timing	Ignition Control - IC
Electronic Spark Timing Circuit	Ignition Control Circuit - IC Circuit
Electronically Controlled Pulse Air System	Pulsed Secondary Air Injection System - PAIR System
Engine Calibration Unit	Programmable Read Only Memory - PROM

Former ISUZU Name	New ISUZU Name Term
Engine Coolant Temperature	Engine Coolant Temperature - ECT
Engine Crank Signal	Crankshaft Position - CKP
Engine RPM	Engine Speed - RPM
ESC	Knock Sensor System - KS System
ESC Module	Knock Sensor Module - KS Module
EST	Ignition Control - IC
Evaporative Emission Control	Evaporative Emission Control System - EVAP Control System
Exhaust Oxygen Sensor	Oxygen Sensor - O2S
Fourth Gear	Fourth Gear - 4GR
Fuel Pump	Fuel Pump - FP
Fuel Pump Relay	Fuel Pump Relay - FP Relay
GND	Ground - GND
GRD	Ground - GND
Ground	Ground - GND
HC	Hydrocarbon - HC
Hg	Hydrargyrum - Hg
High Energy Ignition	Distributor Ignition - DI
Hydrocarbons	Hydrocarbon - HC
IAC	Idle Air Control - IAC
IAC Valve	Idle Air Control Valve - IAC Valve
IACV	Idle Air Control Valve - IAC Valve
Idle Air Control	Idle Air Control - IAC
Idle Speed Control	Idle Speed Control - ISC
Ignition Module	Ignition Control Module - ICM
Inter Cooler	Charge Air Cooler - CAC
ISC	Idle Speed Control - ISC
Knock Signal	Knock Sensor Signal - KC Signal
Lean Exhaust	Lean Heated Oxygen Sensor Signal - Lean HO2S Signal
Lean Exhaust	Lean Oxygen Sensor Signal - Lean O2S Signal
Lean Mixture Signal	Lean Heated Oxygen Sensor Signal - Lean HO2S Signal
Lean Mixture Signal	Lean Oxygen Sensor Signal - Lean O2S Signal
M/C	Mixture Control - MC
Manifold Air Temperature	Intake Air Temperature - IAT
Manifold Air Temperature Sensor	Intake Air Temperature Sensor - IAT Sensor
Manifold Pressure	Manifold Absolute Pressure - MAP
MAP	Manifold Absolute Pressure - MAP
MAP Sensor	Manifold Absolute Pressure Sensor - MAP Sensor
MAT	Intake Air Temperature - IAT
MEM-CAL	Programmable Read Only Memory - PROM
Mem-Cal Error	Programmable Read Only Error - PROM Error
Mode	Diagnostic Test Mode -DTM

Former ISUZU Name	New ISUZU Name Term
MPFI Injector	Multiport Fuel Injection Injector - MFI Injection
MPH	Mile Par Hour - MPH
Multi-Port Injection	Multiport Fuel Injection - MFI
O2	Oxygen - O2
O2 Sensor	Oxygen Sensor - O2S
OBD	On-Board Diagnostic - OBD
Oxygen Sensor	Heated Oxygen Sensor - HO2S
Oxygen Sensor Exhaust	Oxygen Sensor - O2S
P/N	Park/Neutral Position - PNP
Park/Neutral	Park/Neutral Position - PNP
Park/Neutral Switch	Park/Neutral Position Switch - PNP Switch
PFI	Multiport Fuel Injection - MFI
Port Fuel Injection	Multiport Fuel Injection - MFI
Pressure Regulator	Fuel Pressure Control Valve
PROM	Programmable Read Only Memory - PROM
PSPS	Power Steering Pressure Switch - PSP Switch
Pulse Air	Pulsed Secondary Air Injection - PAIR
Pulse Air Injection System	Pulsed Secondary Air Injection System - PAIR System
Pulse Air System	Pulsed Secondary Air Injection System - PAIR System
Pulse Width Modulate	Pulse Width Modulate - PWM
PWM	Pulse Width Modulate - PWM
Rich Exhaust	Rich Heated Oxygen Sensor Signal - Rich HO2S Signal
Rich Exhaust	Rich Oxygen Sensor Signal -Rich O2S Signal
Rich Mixture Signal	Rich Heated Oxygen Sensor Signal - Rich HO2S Signal
Rich Mixture Signal	Rich Oxygen Sensor Signal - Rich O2S Signal
RPM	Revolution Per Minute -RPM
SCAN	Scan Tool - ST
Scan Data	Scan Tool Data - ST Data
Secondary Air System	Secondary Air Injection System - AIR System
Secondary Air Valves	Secondary Air Injection System Valves - AIR System Valve
Secondary Throttle Plate	Induction Air Control Plate System - IAC Plate System
Secondary Throttle Plate System	Induction Air Control Plate System - IAC Plate System
System Too Lean	Lean Heated Oxygen Sensor Signal - Lean HO2S Signal
System Too Rich	Rich Heated Oxygen Sensor Signal -Rich HO2S Signal
System Voltage	Battery Positive Voltage - B+
TB	Throttle Body - TB
TBI	Throttle Body Fuel Injection - TBI
Temperature Gauge	Engine Coolant Temperature Gause - ECT Gauge
Thermal Vacuum Switch	Thermal Vacuum Valve - TVV
Thermal Vacuum Valve	Thermal Vacuum Valve - TVV
Thermostatic Air Cleaner	Air Cleaner - ACL

Former ISUZU Name	New ISUZU Name Term
Throttle Position Switch	Wide Open Throttle Switch - WOT Switch
Throttle Switch	Wide Open Throttle Switch - WOT Switch
Throttle Valve	Throttle Body - TB
TPS	Throttle Position Sensor - TP Sensor
Transmission ECU	Transmission Control Module - TCM
TWC	Three Way Catalytic Converter - TWC
Vacuum Switching Valve	Vacuum Switch Valve - VSV
Vehicle Speed Sensor	Vehicle Speed Sensor - VSS
VSS	Vehicle Speed Sensor - VSS
VSV	Vacuum Switch Valve - VSV
WOT	Wide Open Throttle - WOT

ABBREVIATIONS AND GLOSSARY OF TERMS

Abbreviations used in this section are listed below in alphabetical order with an explanation of the abbreviation. There are some variations in the use of periods and in capitalization (as mph, m.p.h., Mph, and MPH) for abbreviations used in this Section, but all types are acceptable.

A/T—AUTOMATIC TRANSMISSION

AVM—ANALOG VOLT METER

CKT—CIRCUIT

DOHC—DUAL OVERHEAD CAMSHAFTS

DTM—DIAGNOSTIC TEST MODE
A particular state of operation.

DVOM—DIGITAL VOLT OHM METER

ECT—ENGINE COOLANT TEMPERATURE

ECM—ENGINE CONTROL MODULE
A metal box (located in passenger compartment) containing electronic circuitry which electrically controls and monitors air/fuel and emission systems on computer command control, and turns "ON" the "Check Engine" Malfunction Indicator Lamp when a malfunction occurs in the system.

EGR—EXHAUST GAS RECIRCULATION
Method of reducing NOx emission levels by causing exhaust gas to be added to air/fuel mixture in combustion chamber, thus cooling combustion.

FED—FEDERAL
Vehicle/Engine available in all states except California.

GROUND
The negative (—) side of the battery. Also could be a wire (conductor) shorted to ground.

HC—HYDROCARBONS
One of the pollutants found in engine exhaust.

Hg—MERCURY
A calibration material used as a standard for vacuum measurement.

HIGH IMPEDANCE VOLTMETER
Has high opposition to the flow of electrical current. Good for reading circuits with low current flow, such as found in electronic systems because it allows tests to be made without affecting the circuit.

IAT—INTAKE AIR TEMPERATURE
Air temperature in the intake manifold.

IAT—INTAKE AIR TEMPERATURE SENSOR
Measures the underhood temperature.

IC—IGNITION CONTROL
ECM controlled spark timing

IDEAL MIXTURE
The air/fuel ratio which provides the best performance, while maintaining maximum conversion of exhaust emissions. Typically it is 14.7:1.

IGN—IGNITION

INPUTS
Information from sources (such as Engine Coolant Temperature Sensors, Oxygen Sensor, etc.) to the ECM that indicate how the systems are performing.

INTERMITTENT
Occurs now and then; not continuously. In electrical circuits, refers to occasional open, short, or ground.

I/P—INSTRUMENT PANEL

ISC—IDLE SPEED CONTROL
ECM-controlled solenoid used to route vacuum to control idle speed under various engine loads.

KM/H—KILOMETER PER HOUR
A metric unit measuring speed needed to travel distance of one kilometer (1000 meters) in one hour.

L—LITER
A metric unit of capacity.

MALFUNCTION
A problem that causes the system to operate incorrectly. Typical malfunctions are wiring harness opens or shorts, failed sensors or circuit components.

MAP—MANIFOLD ABSOLUTE PRESSURE
Air pressure in the intake manifold with reference to zero or absolute vacuum.

MPH—MILE PER HOUR
A unit measuring speed needed to travel distance of one mile (5280 feet) in one hour.

M/T—MANUAL TRANSMISSION

N.C.—NORMALLY CLOSED
State of relay contacts or solenoid plunger is close when voltage is not applied.

N·m— NEWTON METER (Torque)
A metric unit describing force.

N.M.—NORMALLY OPEN
State of relay contacts or solenoid plunger is open when voltage is applied.

NOx—NITROGEN OXIDES
One of the pullutants found in engine exhaust.

O2—OXYGEN (Sensor)
Monitors the oxygen content of the exhaust system and generates a voltage signal to the Engine Control Module (ECM).

OUTPUT
Result of a function typically controlled by the ECM.

OXYGEN SENSOR
Device that detects the amount of oxygen (O2) in the exhaust stream.

PCV—POSITIVE CRANKCASE VENTILATION
Prevent fumes in crankcase from passing into atmosphere.

PNP—PARK/NEUTRAL POSITION

PORT—EXHAUST OR INTAKE PORT

PWM—PULSE WIDTH MODULATE

RPM—REVOLUTION PER MINUTE
A measure of rotational speed.

SELF—DIAGNOSTIC TROUBLE CODE
The ECM can detect malfunctions in the system. If a malfunction occurs, the ECM turns on the malfunction indicator lamp. A DTC can be obtained from the ECM through the malfunction indicator lamp. This DTC will indicate the area of the malfunction.

TACH—TACHOMETER

TB—THROTTLE BODY

TBI—THROTTLE BODY FUEL INJECTION
Computer Command Control using throttle body fuel injection

TP SENSOR—THROTTLE POSITION SENSOR

VACUUM
Negative pressure; less than atmospheric pressure.

VIN—VEHICLE IDENTIFICATION NUMBER

VSS—VEHICLE SPEED SENSOR
Sensor which sends vehicle speed information to the ECM.

VSV—VACUUM SWITCH VALVE (Electronically Controlled)

VSV—VACUUM SWITCH VALVE
Temperature controlled vacuum switch, that is used to route or exhaust vacuum at various engine temperatures.

WOT—WIDE OPEN THROTTLE

DRIVEABILITY AND EMISSION SECTION SUMMARY

The Driveability and Emissions Sections are subdivided into three sub sections:

SECTION A: CIRCUIT INFORMATION & DIAGNOSIS

- Component Locations
- Wiring Diagrams
- ECM Terminal End View and Terminal Definitions
- On-Board Diagnostic System Check. This must be the first step of any diagnostic procedure.
- DTC Charts with facing pages containing circuit diagrams, circuit operation information, and helpful diagnostic information.

SECTION B: DRIVEABILITY & EMISSIONS SYMPTONS

- This sub-section assists in diagnosis of intermittent problems or problems which don't result in the storing of DTC(s). It is arranged by symptoms of poor driveability and emissions and lists possible causes of the problems.

SECTION C: COMPONENT CHECKS & SERVICE

- Component and Circuit Descriptions
- On-Vehicle Service
- Functional Checks/Diagnostic Charts

SECTION "A"

DIAGNOSTIC PROCEDURE SUMMARY

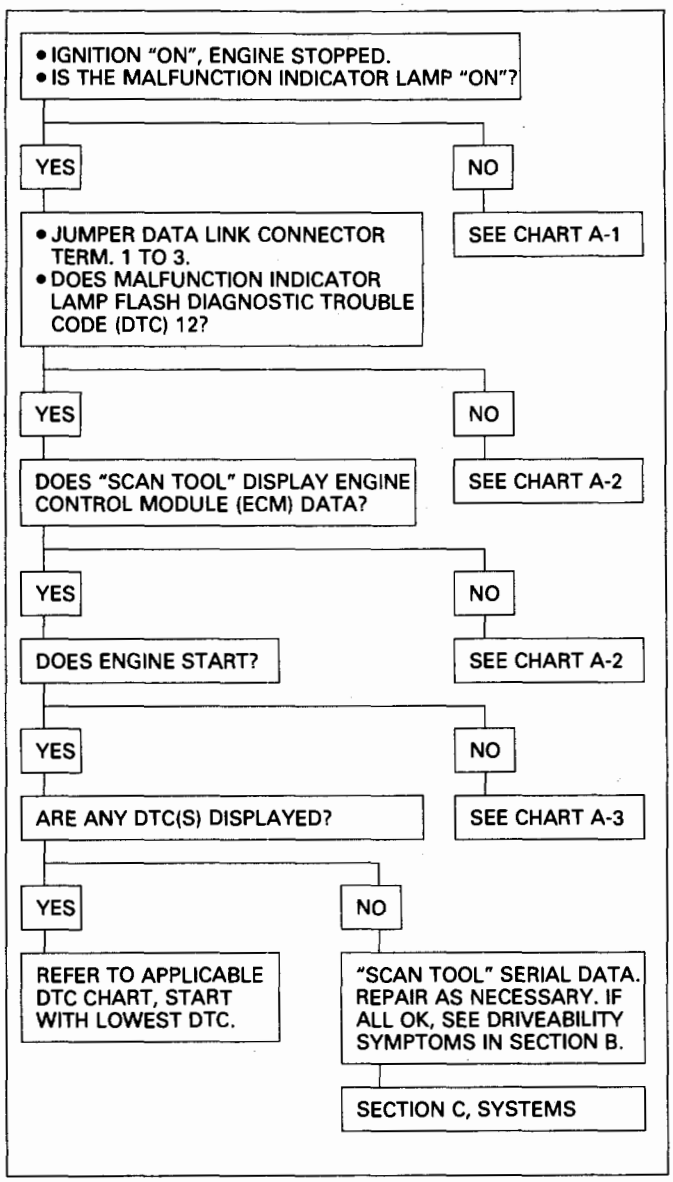

Fig. 6E2-2

This is the starting point for the diagnostic procedures. The diagnostic charts are related to the Engine Control Module (ECM) and will determine if the ECM is working properly.

This section diagnoses the fuel system controlled by the ECM and has charts to diagnosis a circuit when the ECM has displayed a trouble code.

The way to approach a problem is to follow some basic steps.

1. **Are the On-Vehicle Diagnostics working?**
   We find this out by performing the "On-Board Diagnostic System Check" Since this is the starting point for the diagnostic procedure, always begin here.

If the On-Vehicle Diagnostics aren't working, the "On-Board Diagnostic System Check" will lead you to a chart in Section "A" to correct the problem. If the On-Vehicle Diagnostics are OK, the next step is:

2. **Is there a Trouble Code stored?**
   If a trouble code is stored, go directly to the numbered DTC chart in Section "A". This will determine if the fault is still present. If no trouble code is stored, the third step is:
3. **"Scan Tool" Serial Data.**
   This involves reading the various pieces of information available on the Serial Data Stream with one of the tools available for that purpose. Information on these tools and the meaning of the various displays can be found in the following paragraphs. Expected readings can be found on the facing page for the On-Board Diagnostic System Check.

This procedure, which takes only a short time, will help lead you to repair the problem in the least amount of time.

DATA LINK CONNECTOR "SCAN TOOLS"

The Engine Control Module (ECM) can communicate a variety of information through data link connector terminal "2". This data is transmitted at a high frequecy which requires a "Scan tool" for interpretation. There are several "Scan tools" available for reading this information.

With an understanding of the data which the tool displays, and knowledge of the circuits involved, the tool can be very useful in obtaining information which would be more difficult or impossible to obtain with other equipment.

"Scan tools" do not make the use of diagnostic charts unnecessary, nor can they indicate exactly where a problem is in a particular circuit. Trouble Tree Charts incorporate diagnosis procedures using a "Scan tool" where possible and most charts *require* the use of a "Scan tool" when it is applicable.

A "SCAN TOOL" THAT DISPLAYS FAULTY DATA SHOULD NOT BE USED AND THE PROBLEM SHOULD BE REPORTED TO THE MANUFACTURER. THE USE OF A FAULTY "SCAN TOOL" CAN RESULT IN MIS-DIAGNOSIS AND UNNECESSARY PARTS REPLACEMENT.

ECM's have two (2) modes for transmitting information. The following information will describe the system operation in each of the modes.

Data List (FO)

On engines that can be monitored in the "Open" mode, certain parameters can be observed without changing the engine operating characteristics. The parameters capable of being read vary with engine families. Most "Scan tools" are programmed so that the system will go directly into the data link connector mode if the "Open" mode is not available.

"SCAN TOOL" LIMITATIONS AND USE

The "Scan tool" allows a quick check of sensors and switches which are inputs to the ECM. The "Scan tool" allows one to manipulate wiring harnesses or components under the hood while observing the "Scan Tool" readout. This helps in locating intermittents with the engine not running.

INTERMITTENT CONDITIONS

The "Scan tool" is helpful in cases of intermittent operation. The tool can be plugged in and observed while driving the vehicle under the condition where the light comes "ON" momentarily, or the engine driveability is poor momentarily. If the problem seems to be related to certain areas that can be checked on the "Scan tool", then those are the positions that should be checked while driving the vehicle. If there does not seem to be any correlation between the problem and any specific circuit, the "Scan tool" can be checked on each position, watching for a period of time to see if there is any change in the readings that indicates intermittent operation.

The "Scan tool" is also a useful and quick way of comparing operating parameters of a poorly operating engine with a known good one. For example; A sensor may shift in value but not set a diagnostic trouble code. Comparing with a known good vehicle may uncover the problem.

The "Scan tool" has the ability to save time in diagnosis and prevent the replacement of good parts. The key to using the "Scan tool" successfully for diagnosis lies in the technicians ability to understand the system he is trying to diagnose as well as an understanding of the "Scan tool's" limitations. Therefore, the technician should read the tool operating manual to become familiar with the tool. The following information will describe most of the "Scan tool" positions and how they can be helpful in diagnosis.

"SCAN TOOL" POSITIONS

INJECTOR PULSE WIDTH

In this position, the reading is given in milliseconds which is the on time that the ECM is commanding to the injector(s).

CLOSED LOOP/OPEN LOOP

This position will indicate whether the engine control system is operating in open or closed loop. Most systems go closed loop after a certain amount of run time, when engine coolant temperature is high enough, and the oxygen sensor becomes active.

TROUBLE CODES

Will display any trouble codes stored in the ECM memory.

THROTTLE POSITION (TP) SENSOR

Values read will be the voltage as seen by the ECM. The voltage should be the TP sensor specification with the throttle closed and go up to about 5 volts with wide open throttle.

THROTTLE ANGLE

Displays in percent the amount the throttle is open.

HEATED OXYGEN SENSOR (HO2S)

The reading will be read out in millivolts (mv) with a range from 1 to 999 mv. If the reading is consistently below 350 (350 mv), the fuel system is running lean as seen by the Engine Control Module (ECM) and if the reading is consistently above 550 (550 mv), the system is running rich.

VEHICLE SPEED SENSOR (VSS)

Displays vehicle speed, useful in checking speedometer accuracy.

PROGRAMMABLE READ ONLY MEMORY (PROM) ID

In this position the last 4 digits of the Mem-Cal part number will be displayed.

REVOLUTION PER MINUTE (RPM)

Displays engine speed. Often useful if extra reference pulses are suspected. A sudden high revolution per minute indication while at a steady throttle would indicate electrical interference (EMI) in the reference circuit. This interference is usually caused by ECM wires too close to ignition secondary wires or an open electronic ignition ground circuit.

MILE PER HOUR (MPH)

Displays vehicle speed. Useful in checking speedometer accuracy.

ENGINE COOLANT TEMPERATURE (ECT)

Displays engine temperature in degress centigrade. After engine is started the temperature should rise steadily to about 85-95°C, then stabilize when the thermostat opens.

INTAKE AIR TEMPERATURE (IAT) SENSOR

Displays temperature of the intake manifold air. Should read close to ambient air temperature when the engine is cold, and rise as underhood and engine temperature increases.

MANIFOLD ABSOLUTE PRESSURE (MAP)

The Manifold Absolute Pressure (MAP) Sensor produces a low signal voltage when MAP is low (high vacuum) and a high voltage when the pressure is high (low vacuum).
With the ignition on and the engine stopped, the manifold absolute pressure is equal to atmospheric pressure and the signal voltage will be high. This information is used by the ECM as an indication of vehicle altitude and is referred to as barometric pressure. Comparison of this barometric pressure reading with a known good vehicle with the same sensor is a good way to check accuracy of a "suspect" sensor. Readings should be the same ±0.4 Volt.
MAP Sensors have a colored plastic insert visible in the connector cavity. Sensors with the same insert color are identical in calibration. The harness electrical connector color should also be the same as the sensor insert color.

BAROMETRIC PRESSURE (BARO)

Displays the MAP reading before the engine was started. This value will vary depending on Barometric Pressure and altitude.

EXHAUST GAS RECIRCULATION (EGR) (ON/OFF)

The exhaust gas recirculation system uses a valve controlled by vacuum to feed a small amount of exhaust gas back into the intake manifold to control formation of NOx. Like all ECM outputs the "Scan tool" only indicates that the ECM has commanded the function and does not indicate that the function has really happened.

SHORT TERM (S.T.) FUEL TRIM AND LONG TERM (L.T.) FUEL TRIM

On Fuel Injected Engines, normal readings for these positions are around 128. If higher, it indicates that the ECM is adding fuel to the base fuel calculation because the system is lean. If the numbers are below 128, the ECM is taking out fuel from the base calculation because the system is rich. The S.T. Fuel Trim is short term corrective action while the L.T. Fuel Trim portion (which is a long term correction) will only change if the intergrator has seen a condition which lasts for a calibrated period of time.

LONG TERM (L.T.) FUEL TRIM

There are from zero to seventeen different cells which the Engine Control Module (ECM) learns at depending on revolution per minute (rpm) and manifold absolute pressure. This parameter will display what cell the ECM is using for the fuel calculation at the time.

IDLE AIR CONTROL (IAC) COUNTS

This system is used to control engine idle speed to the desired rpm, for different operating conditions. In this diagnostic test mode, the numbers will indicate what position the ECM thinks the valve is in. The ECM moves the idle air control in counts and these counts are displayed on a "Scan tool".

DESIRED REVOLUTION PER MINUTE

Indicates the rpm to which the ECM is trying to control the idle.

AIR CONDITIONING (A/C) REQUEST

Displays the state of the Air Conditioning (A/C) signal line to the ECM. Should read "YES" whenever the A/C is requested.

AIR CONDITIONING (A/C) CLUTCH

Displays "ON" when the ECM has commanded the A/C Clutch "ON".

POWER STEERING PRESSURE (PSP) SWITCH

Displays the state of switch. This reading may vary with the tool used and the type of switch installed on the vehicle. The important thing is that the reading changes state (switches) when the steering is moved against the stops.

BATTERY POSITIVE VOLTAGE

Displays the battery positive voltage detected at the ECM ignition input.

SPARK ADVANCE

This is a amount of total spark advance including the base electronic ignition timing.

START UP ENGINE COOLANT

This parameter is the engine coolant temperature at the time the engine was started.

ENGINE SPEED (RPM)

RPM calculated during a crank mode, helpful in diagnosing a NON-start condition.

FUEL TRIM ENABLE

This value is an indication when the Fuel Trim Enable values are being updated within the ECM program.

AIR/FUEL RATIO

This is the air to fuel ratio that is being commanded to the injectors.

INDUCTION AIR CONTROL

The "Scan tool" will display the command being given to the induction air control plate system solenoid.

SECTION B—DRIVEABILITY SYMPTOMS

Always start with Section "A" "On-Board Diagnostic System Check" before proceeding to the driveability symptoms. Section "A" checks the ECM which may cause the driveability problem. A definition of each symptom is included. This will then lead to the most probable causes of the driveability problem.

SECTION C—COMPONENTS SYSTEMS

There are many component systems that are used to control fuel and emissions. Section "C" introduces each component system or control with a general description, diagnosis, and on-vehicle service.
Each of the Section "C" diagnosis sections will contain information on how the "Scan tool" can be used for diagnosing a particular component when a trouble code has not been set. (example: Section "C1" under diagnosis will explain how the "Scan tool" can be used for diagnosis as well as what the normal readings would be for the ECM Sensors.

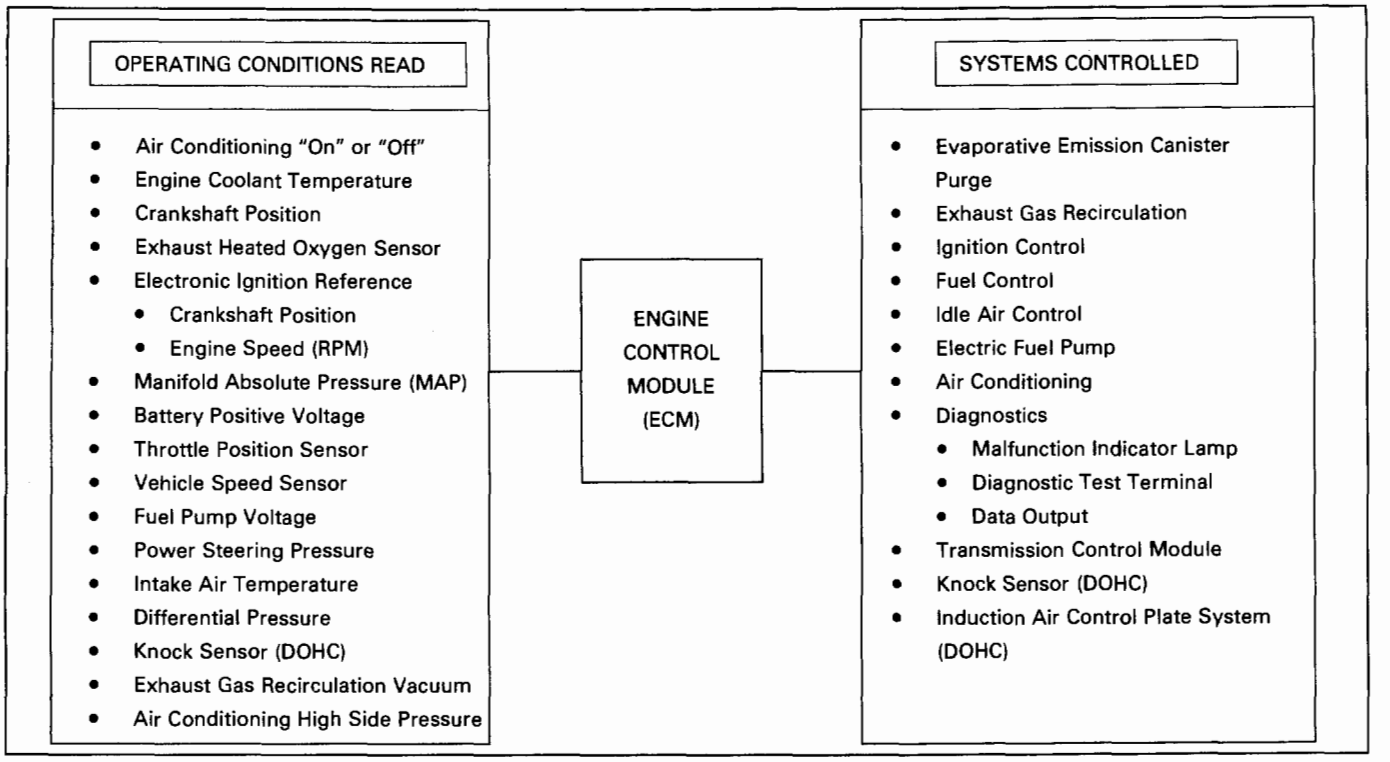

Fig. 6E2-3

ENGINE CONTROL MODULE (ECM) AND SENSORS

This Section describes the Engine Control Module (ECM) and the information sensors in the system. Figure (Fig. 6E2-3) shows the operating conditions which the ECM may read and the systems that the ECM may control.

FUEL CONTROL SYSTEM

The ECM controls the air/fuel delivery to the combustion chamber by controlling the fuel flow through the injector(s).

ELECTRIC FUEL PUMP (IN-TANK)

The in-tank fuel pump is controlled by the ECM. When ignition is turned on, the pump will run for 2 seconds, then stop unless the engine is cranking or running.

EVAPORATIVE EMISSION (EVAP) CONTROL SYSTEM

This system has a canister which stores fuel vapor from the fuel tank. The fuel vapor is removed from the canister and consumed in the normal combustion process when the engine is running.

IGNITION CONTROL (IC)

This system is controlled by the ECM which controls spark advance (timing) and is used on all engines.

EXHAUST GAS RECIRCULATION (EGR)

The exhaust gas recirculation system uses ECM controlled valve to feed a small amount of exhaust gas back into the intake manifold to control formation of NOx.

AIR CONDITIONING (A/C) CLUTCH CONTROL

The ECM may control the air conditioning clutch on the compressor to improve idle quality.

POSITIVE CRANKCASE VENTILATION (PCV)

The PCV system passes crankcase vapors into the intake manifold. This system is not controlled by the ECM and is used on all engines.

TOOLS NEEDED TO SERVICE THE SYSTEM

The system requires a data link connector read-out (Scan) tool, tachometer, test light, ohmmeter, digital voltmeter with 10 megohms impedance (J-39200), vacuum gage and jumper wires for diagnosis. A test light or voltmeter must be used when specified in the procedures. They must NOT be interchanged. For more complete information on the operation of these tools, see the manufacturer's instructions.

Voltmeter

Voltage position measures amount of voltage when connected in parallel to an existing circuit. A digital voltmeter with 10 megohm input impedance is used because this type of meter will not load down the circuit and result in faulty readings. Some circuits require accurate low voltage readings, and some circuits in the engine control module have a very high resistance.

Digital multimeter: J-39200 or equivalent 018a

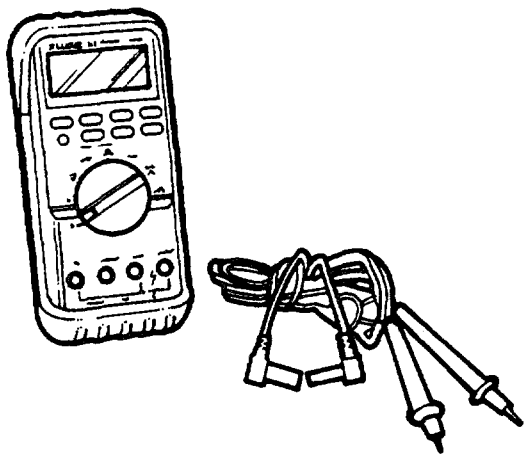

Fig. 6E2-4

Ammeter

When used as ammeter, this meter also accurately measures extremely low current flow. Refer to meter instructions for more information.

- Selector must be set properly for both function and range. DC is used for most automotive measurements.

Digital multimeter: J-39200 or equivalent

Ohmmeter

Measures resistance of circuit directly in ohms. Refer to meter instructions for more information.

- OL Display in all ranges indicates open circuit.
- Zero display in all ranges indicates a short circuit.
- Intermittent connection in circuit may be indicated by digital reading that will not stabilize on circuit.
- Range Switch
  - 200 - Reads ohms directly
  - 2K, 20K, 200K - Reads ohms in thousands
  - 2M and 20M - Reads ohms in millions

Digital multimeter: J-39200 or equivalent

Vacuum pump (20 in. hydragyrum minimum)

Use gage to monitor manifold engine vacuum and the hand pump to check vacuum sensors, solenoids and valves.

Vacuum pump: J-23738 018

Fig. 6E2-5

Unpowered test light

Used to check wiring for complete circuit and short to ground or voltage.

Unpowered test light: J-34142-A 018c

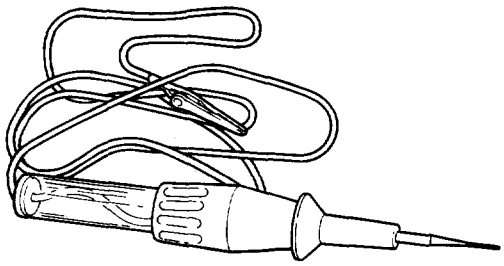

Fig. 6E2-6

Tachometer

Use inductive trigger signal pickup type to check revolution per minute.

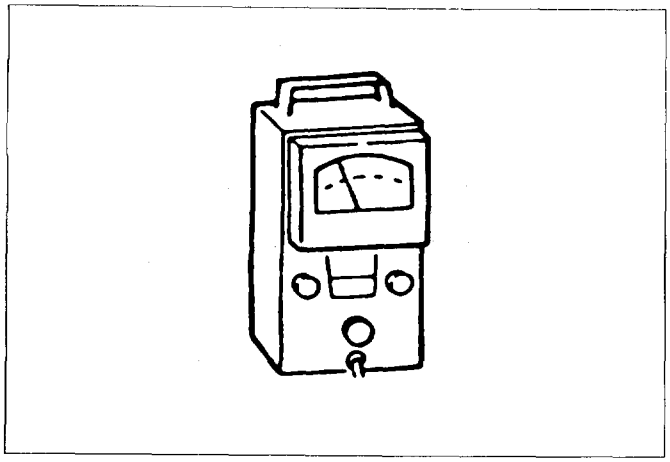

Fig. 6E2-7

Multiport fuel injection (MFI) diagnostic kit

Used to diagnose MFI systems.
The kit includes:

- Fuel Pressure Gage - to check fuel pump pressure and compare injector pressure drop for equal fuel distribution.
- Injector Test Light - to check electrical circuit to an injector.
- Injector Test- to energize each fuel injector for a precise amount of time to perform injector balance test in CHART C-2A by checking each injector's pressure drop using pressure gage.

MFI test kit: J-34730-B

Fuel pressure gage

Used to check and monitor fuel line pressure of port fuel system.

MFI test kit: J-34730-B

Injector test light

Used to check electrical circuit to a port fuel injector.

MFI test kit: J-34730-B

Injector tester

Used to energize each fuel injector for a precise amount of time to perform injector balance test in CHART C-2A by checking each injector's pressure drop using pressure gage.

MFI test kit: J-34730-B

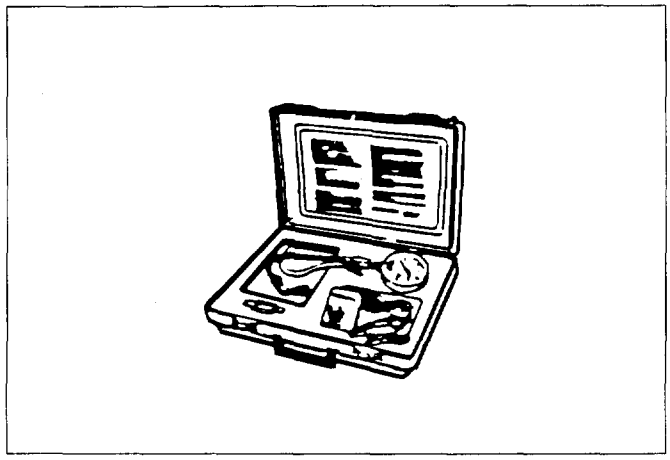

Fig. 6E2-8

Spark tester

Use to check available secondary ignition voltage. Also called an ST125.

Spark tester: J-26792

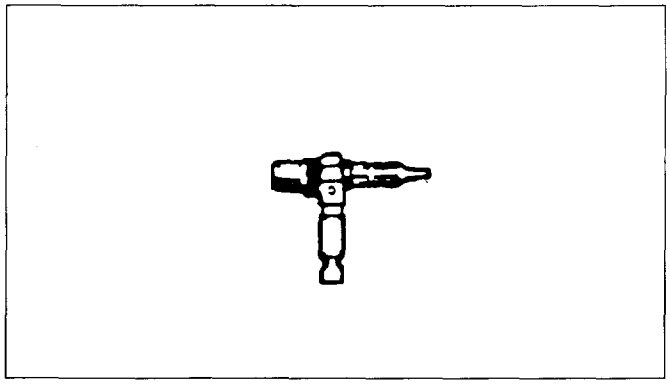

Fig. 6E2-9

Connector test adapter kit

Used to make electrical test connections in current Weather Pack, Metri-Pack and Micro-Pack style terminals.

Terminal test adapter kit: J-35616

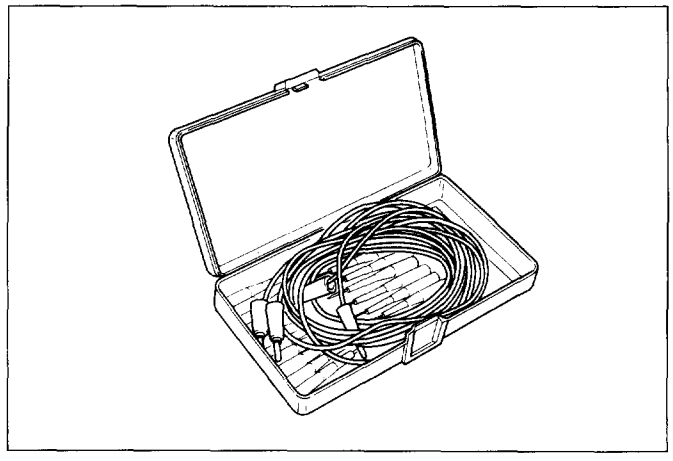

Fig. 6E2-10

Circuit tester

Used to check all relays and solenoids before connecting them to a new engine control module. Measures the circuit resistance and indicates pass or fail via green or red LED. Amber LED indicates current polarity. Can also be used as a non-powered continuity checker.

Engine control module circuit tester: J-34636

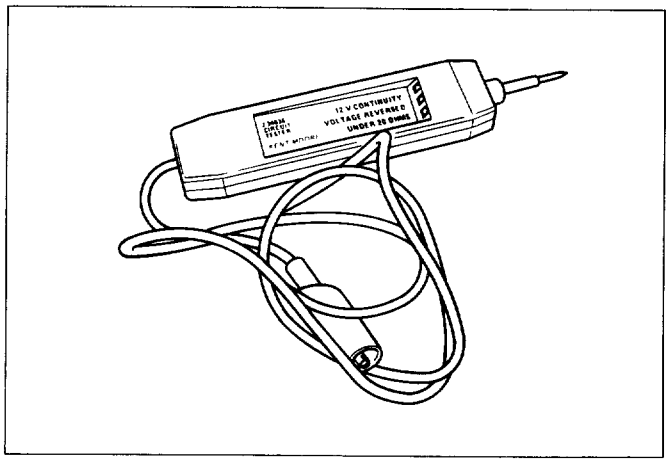

Fig. 6E2-11

Metri-pack terminal remover

Used to remove 150 series Metri-Pack "pull-to-seat" terminals from connectors.

Terminal remover: J-35689-A

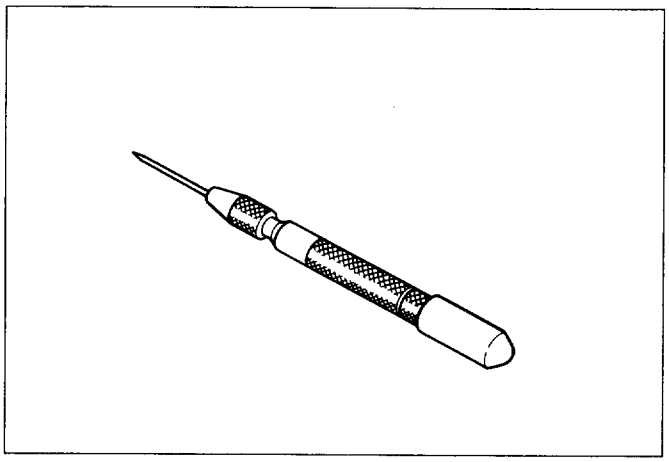

Fig. 6E2-12

Idler air control (IAC) system driver

Used to test IAC motor for correct functioning and proper response to commands.

IAC system driver: J-37027-A

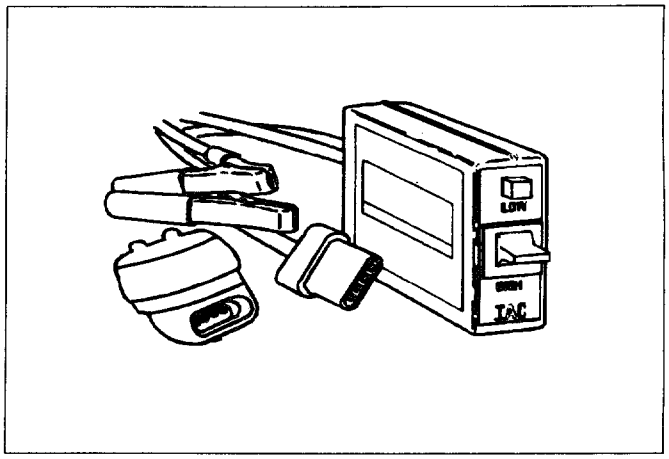

Fig. 6E2-13

Weather pack terminal remover

Used to remove Terminals from Weather Pack connectors.

Weather pack terminal remover: J-28742-A

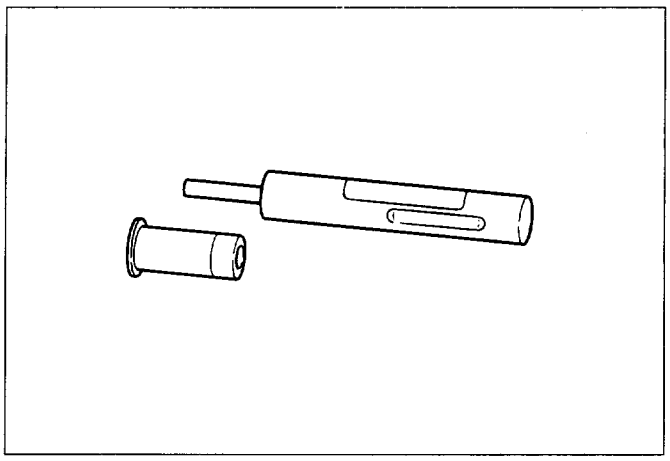

Fig. 6E2-13

Engine control module connector terminal remover

Used to remove terminal from Micro-Pack connectors.

Engine control module connector terminal remover: J-33095

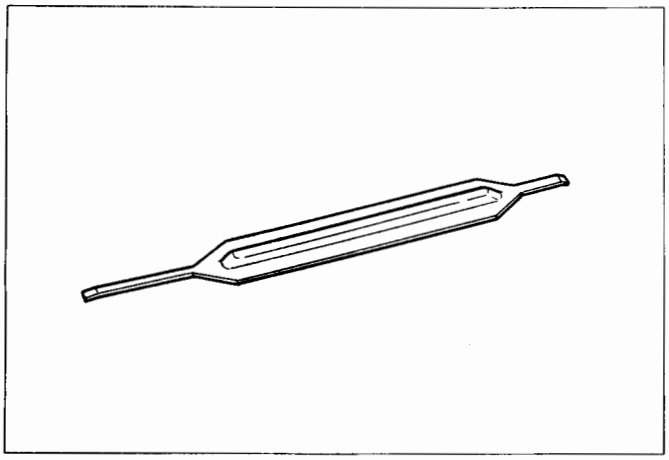

Fig. 6E2-14

Intake manifold diagnostic plate

Used to fuel rail pressure test and fuel injector balance test.

Intake manifold diagnostic plate: J-39185

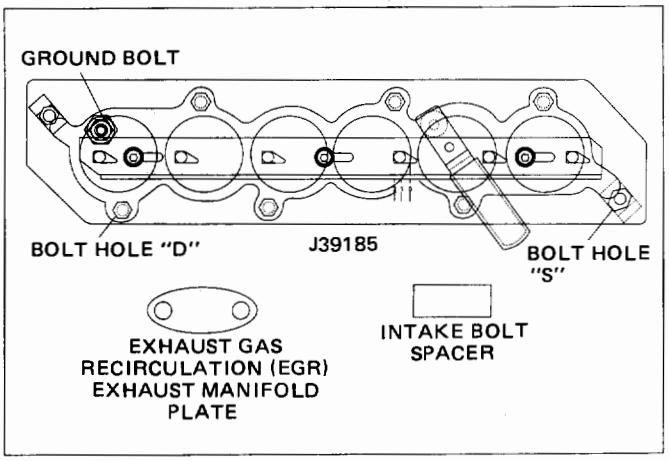

Fig. 6E2-14

GENERAL SPECIFICATIONS

Many of the specifications used in this section are located on the Vehicle Emission Control Information Label under the hood.

Listed on the chart below are locations of specifications used in this Section.

Specification	Location of information
Engine Timing	Not adjustable, engine control module controls timing.
Idle Speed	Not adjustable, engine control module controls idle.
Spark Plug Type	See "Identification" in Section 0A.
Spark Plug Gap	Vehicle Emission Control Information Label.
Engine Diagnostic Trouble Code	8th digit of VIN number. See "Maintenance Service Data" in Section 0B.
Part Numbers of Major Components	AIPDN (American Isuzu Parts Dept. Network)
Replacement of Vehicle Emission Control Information Label	ISUZU Parts Catalog. AIPDN (American Isuzu Parts Dept. Network)

VACUUM HOSE ROUNTING DIAGRAM

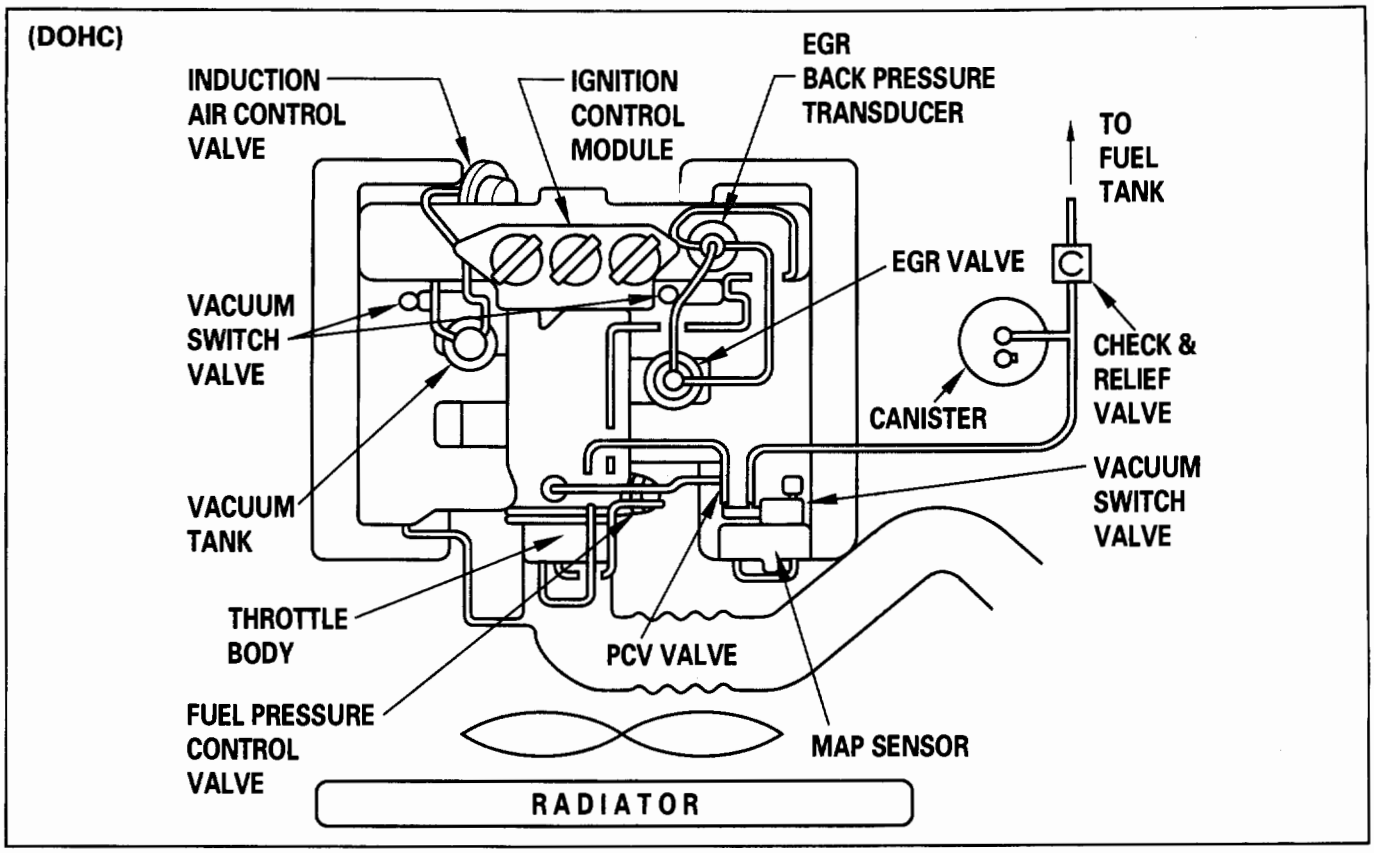

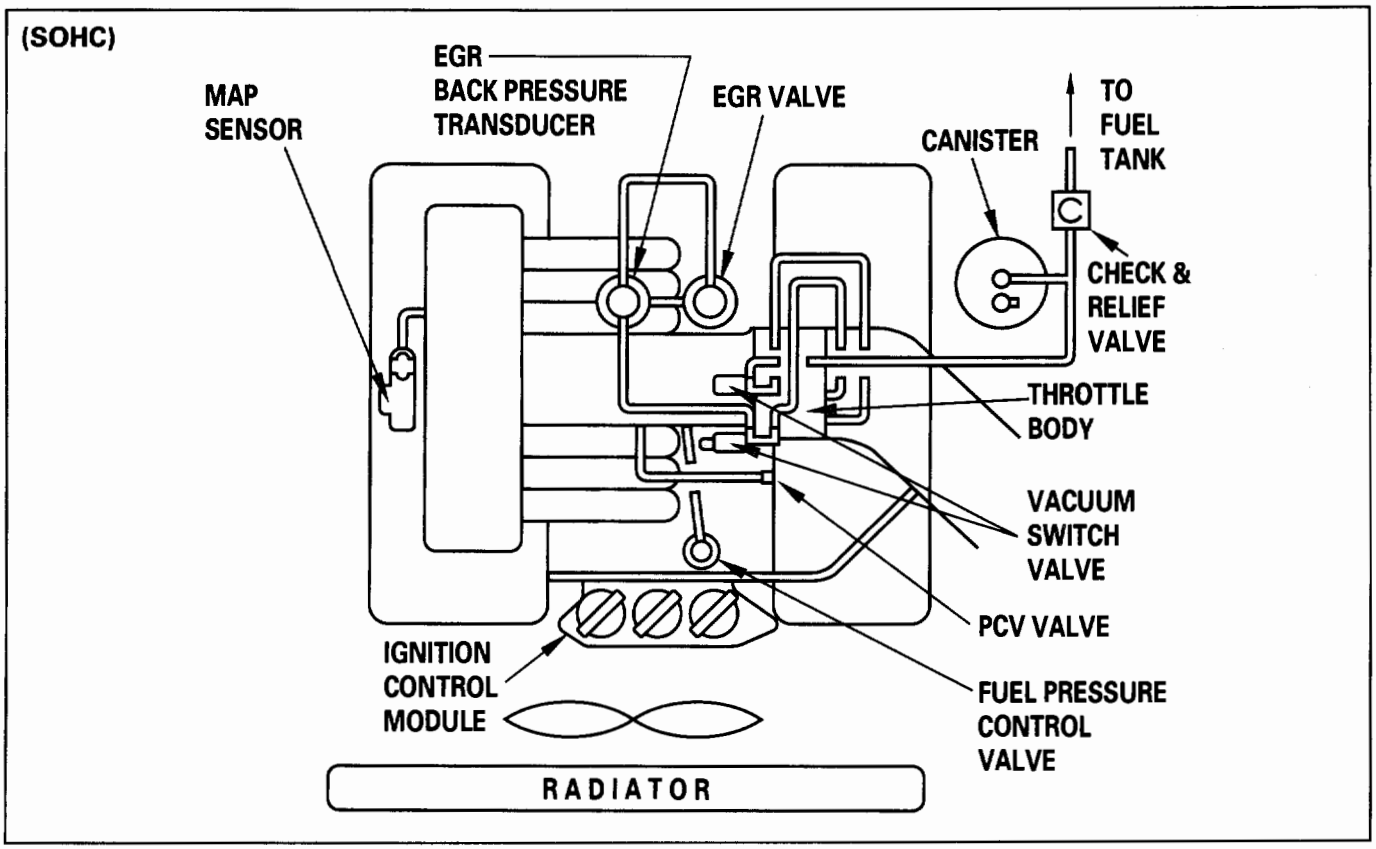

SECTION A

ENGINE COMPONENTS/WIRING DIAGRAMS/DIAGNOSTIC CHARTS

CONTENTS

On-Board Diagnostic (OBD) System Check . 6E2—23
Basic Procedure . . . . . 6E2—23
Engine Component Location . . . . . 6E2—24
Engine Control Module Wiring Diagrams . . . . . 6E2—26
Engine Control Module (ECM) Connector Identification . . . . . 6E2—33
"SCAN TOOL" On-Board Diagnostic (OBD) System Check . . . . . 6E2—34
On-Board Diagnostic (OBD) System Check . 6E2—36
Won't Flash Diagnostic Trouble Code (DTC) 12 No "Check Engine" Malfunction Indicator Lamp (MIL)-Chart A-1 . . . . . 6E2—38
No Data Link Connector (DLC) Data or Won't Flash Diagnostic Trouble Code (DTC) 21 "Check Engine" Malfunction Indicator Lamp (MIL) "On" Steady-Chart A-2 . . . . . 6E2—40
Engine Crank But Will Not Run-Chart A-3 . . . . . 6E2—42
Fuel Pump Relay Circuit-Chart A-5 . . . . . 6E2—48
Fuel System Pressure Test-Chart A-7 . . . 6E2—50
Intake Manifold Diagnostic Plate Chart A-8 . . . . . 6E2—56
Diagnostic Trouble Code (DTC) 13 Heated Oxygen Sensor (HO2S) Circuit (Open Grounded Circuit) . . . . . 6E2—58
Diagnostic Trouble Code (DTC) 14A Engine Coolant Temperature (ECT) Sensor Circuit (High Temperature Indicated) . . . . . 6E2—60
Diagnostic Trouble Code (DTC) 14B Engine Coolant Temperature (ECT) Sensor Circuit (Low Temperature Indicated) . . . . . 6E2—62
Diagnostic Trouble Code (DTC) 21A Throttle Position (TP) Sensor Circuit (Signal Voltage High) . . . . . 6E2—64
Diagnostic Trouble Code (DTC) 21B Throttle Position (TP) Sensor Circuit (Signal Voltage Low) . . . . . 6E2—66
Diagnostic Trouble Code (DTC) 23A Intake Air Temperature (IAT) Sensor Circuit (Low Temperature Indicated) . . . . . 6E2—68
Diagnostic Trouble Code (DTC) 23B Intake Air Temperature (IAT) Sensor Circuit (High Temperature Indicated) . . . . . 6E2—70
Diagnostic Trouble Code (DTC) 24 Vehicle Speed Sensor (VSS) Circuit . . . 6E2—72
Diagnostic Trouble Code (DTC) 32 Exhaust Gas Recirculation (EGR) Circuit . . . . . 6E2—74
Diagnostic Trouble Code (DTC) 33A Manifold Absolute Pressure (MAP) Sensor Circuit (Signal Voltage High-Low Vacuum) . . . . . 6E2—76
Diagnostic Trouble Code (DTC) 33B Manifold Absolute Pressure (MAP) Sensor Circuit (Signal Voltage Low-High Vacuum) . . . . . 6E2—78
Diagnostic Trouble Code (DTC) 42 Ignition Control (IC) Circuit . . . . . 6E2—80
Diagnostic Trouble Code (DTC) 43 Knock Sensor (KS) Circuit (DOHC) . . . . 6E2—82
Diagnostic Trouble Code (DTC) 44 Heated Oxygen Sensor (HO2S) Circuit (Lean Heated Oxygen Sensor (HO2S) Signal Indicated) . . . . . 6E2—84
Diagnostic Trouble Code (DTC) 45 Heated Oxygen Sensor (HO2S) Circuit (Rich Heated Oxygen Sensor (HO2S) Signal Indicated) . . . . . 6E2—86
Diagnostic Trouble Code (DTC) 51 Engine Control Module (ECM) Failure ECM Failed or Electrically Erasable Programmable Read Memory Only Failure) . . . . . 6E2—88

ON-BOARD DIAGNOSTIC (OBD) SYSTEM CHECK

The "On-Board Diagnostic System Check" verifies the system is functioning correctly. Some special considerations to keep in mind while making the "On-Board Diagnostic System Check" are:

Blocking Drive Wheels

The vehicle drive wheels should always be blocked while checking the system.

BASIC PROCEDURE

If the basic information on using the diagnostic procedures contained in this section has not been reviewed, refer to the introduction of this section.

ENGINE COMPONENT LOCATION (SOHC)

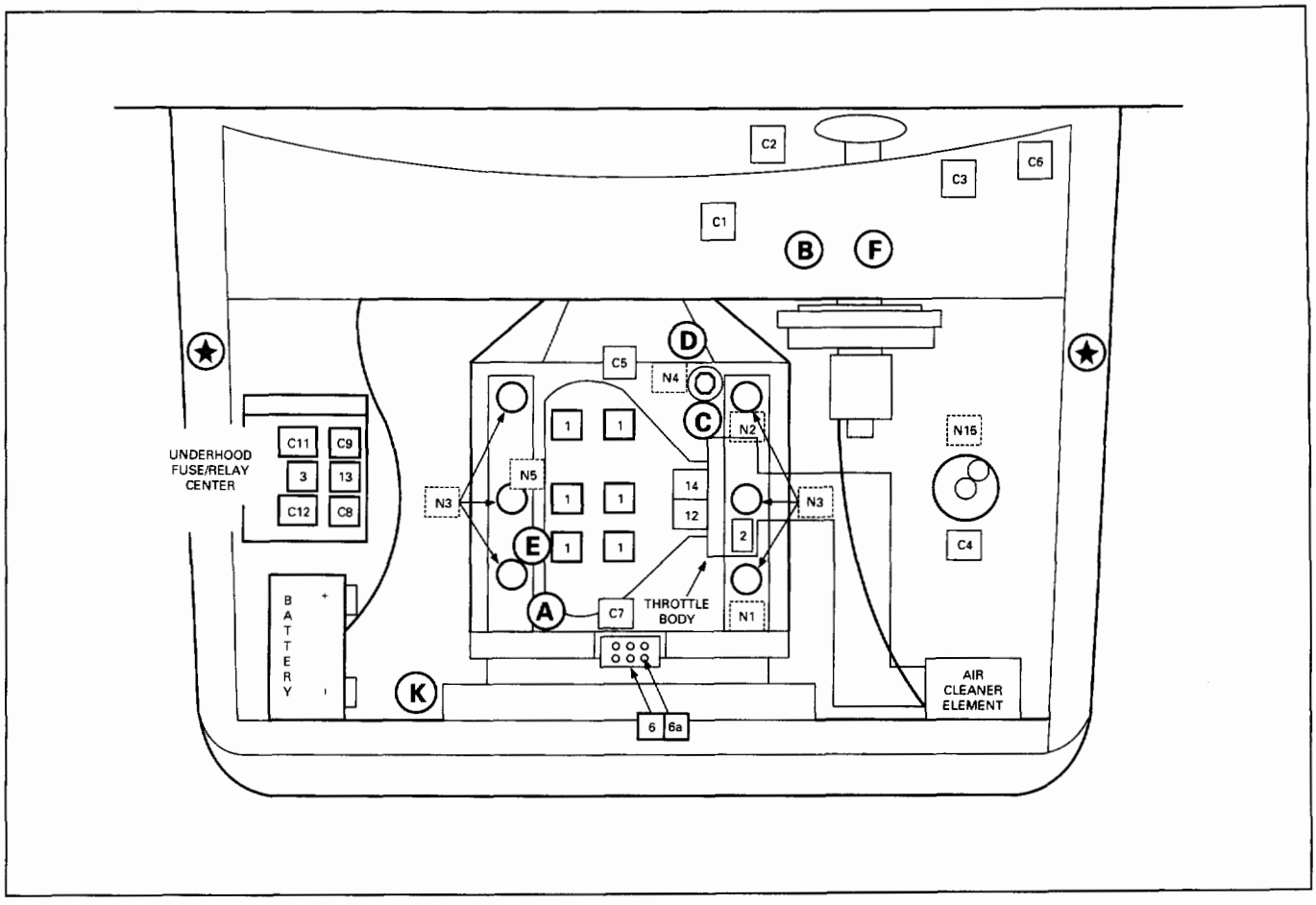

Fig. 6E2-15

COMPUTER HARNESS

- C1 Engine control module (ECM) *
- C2 DLC diagnostic connector
- C3 "Check Engine" Malfunction indicator lamp
- C4 Engine harness connectors (3)
- C5 ECM harness ground
- C6 Fuse panel
- C7 Electronic ignition ground
- C8 ECM main relay
- C9 Fuel pump fuse 15A
- C11 Oxygen 10A heater fuse
- C12 30A ECM main fusible link

ECM CONTROLLED COMPONENTS

- 1 Fuel injector
- 2 Idle air control
- 3 Fuel pump relay
- 6 Ignition control module
- 6a Ignition coils
- 12 Exhaust gas recirculation (EGR) VSV
- 13 Air conditioning relay
- 14 Evaporate emission canister purge VSV

ECM INFORMATION SENSORS

- A Manifold Absolute Pressure
- B Heated oxygen sensor
- C Throttle position sensor
- D Engine coolant temperature
- E Intake air temperature — sensor
- F Vehicle speed sensor
- K Power steering pressure switch (in-line)

EGR VALVE

CHASSIS GROUNDS

* The ECM is located behind the console in the lower dash.

EMISSION COMPONENTS (NOT ECM CONTROLLED)

- N1 Crankcase vent valve (PCV)
- N2 EGR valve back pressure transducer
- N3 Spark plugs
- N4 Fuel rail test fitting (for fuel pressure test)
- N5 Crankshaft position sensor
- N15 Fuel vapor canister

ENGINE COMPONENT LOCATION (DOHC)

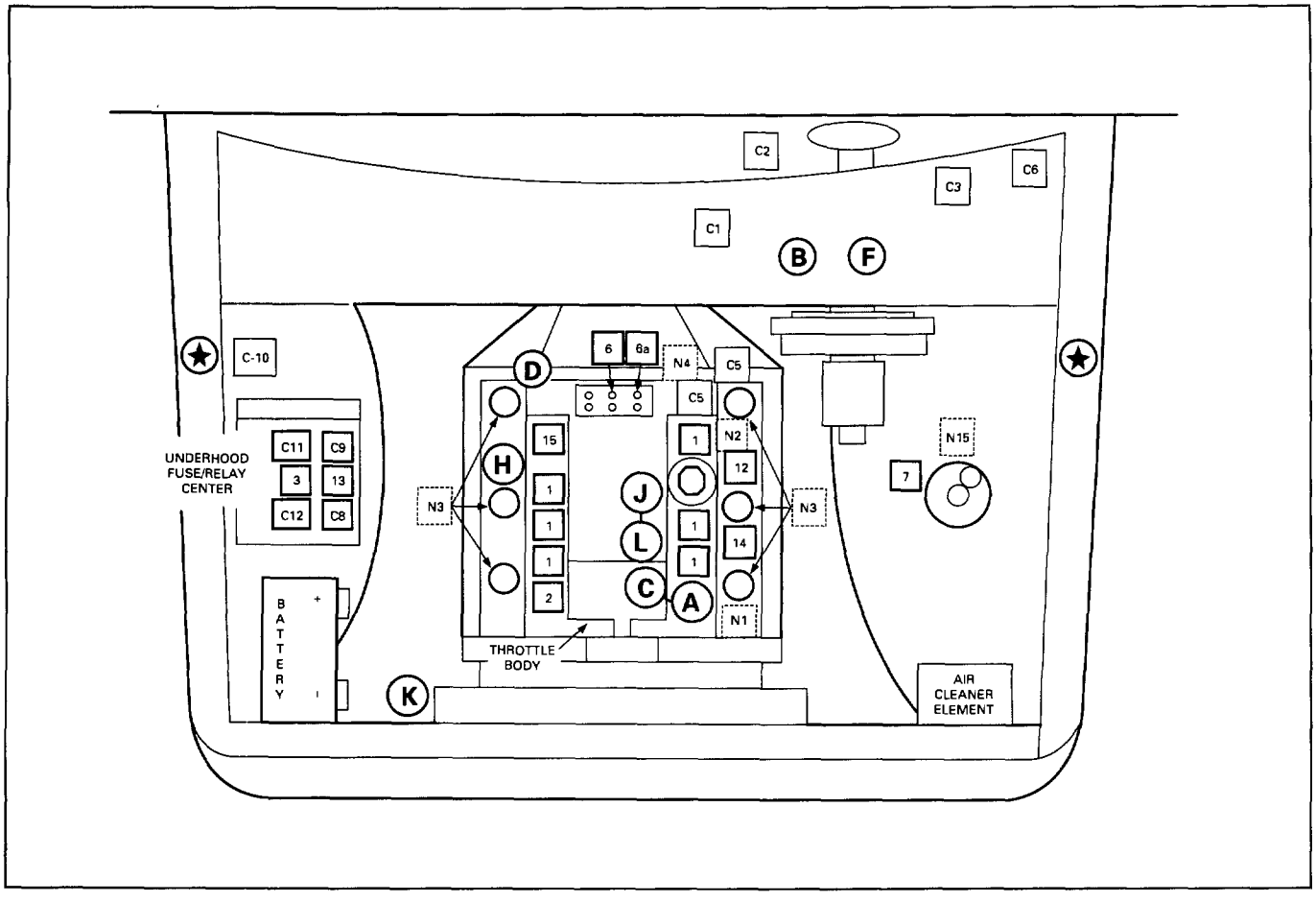

Fig. 6E2-16

☐ COMPUTER HARNESS

- C1 Engine control module (ECM) *
- C2 DLC diagnostic connector
- C3 "Check Engine" Malfunction indicator lamp
- C5 ECM harness ground
- C6 Fuse panel
- C8 ECM main relay
- C9 Fuse pump fuse 15A
- C10 Injector resistor
- C11 Oxygen 10A heater fuse
- C12 30A ECM main fusible link

☐ ECM CONTROLLED COMPONENTS

- 1 Fuel injector
- 2 Idle air control
- 3 Fuel pump relay
- 6 Ignition control module ignition control
- 6a Ignition coils
- 7 Knock sensor Module under charcoal canister
- 12 Exhaust Gas Recirculation (EGR) VSV
- 13 Air conditioning relay
- 14 Evaporate emission canister purge VSV
- 15 Induction air control plate system VSV

◯ ECM INFORMATION SENSORS

- A Manifold Absolute Pressure
- B Heated oxygen sensor
- C Throttle position sensor
- D Engine coolant temperature
- F Vehicle speed sensor
- H Crankshaft position sensor
- J Knock sensor (under intake assembly)
- K Power steering pressure switch (in-line)
- L Intake air temperature

◎ EGR VALVE

★ CHASSIS GROUNDS

☐ EMISSION COMPONENTS (NOT ECM CONTROLLED)

- N1 Crankcase vent valve (PCV)
- N2 Exhaust gas recirculation valve back pressure transducer
- N3 Spark plugs
- N4 Fuel rail test fitting (for fuel pressure test)
- N15 Fuel vapor canister

* The ECM is located behind the console in the lower dash.

ENGINE CONTROL MODULE WIRING DIAGRAM (1) (SOHC)

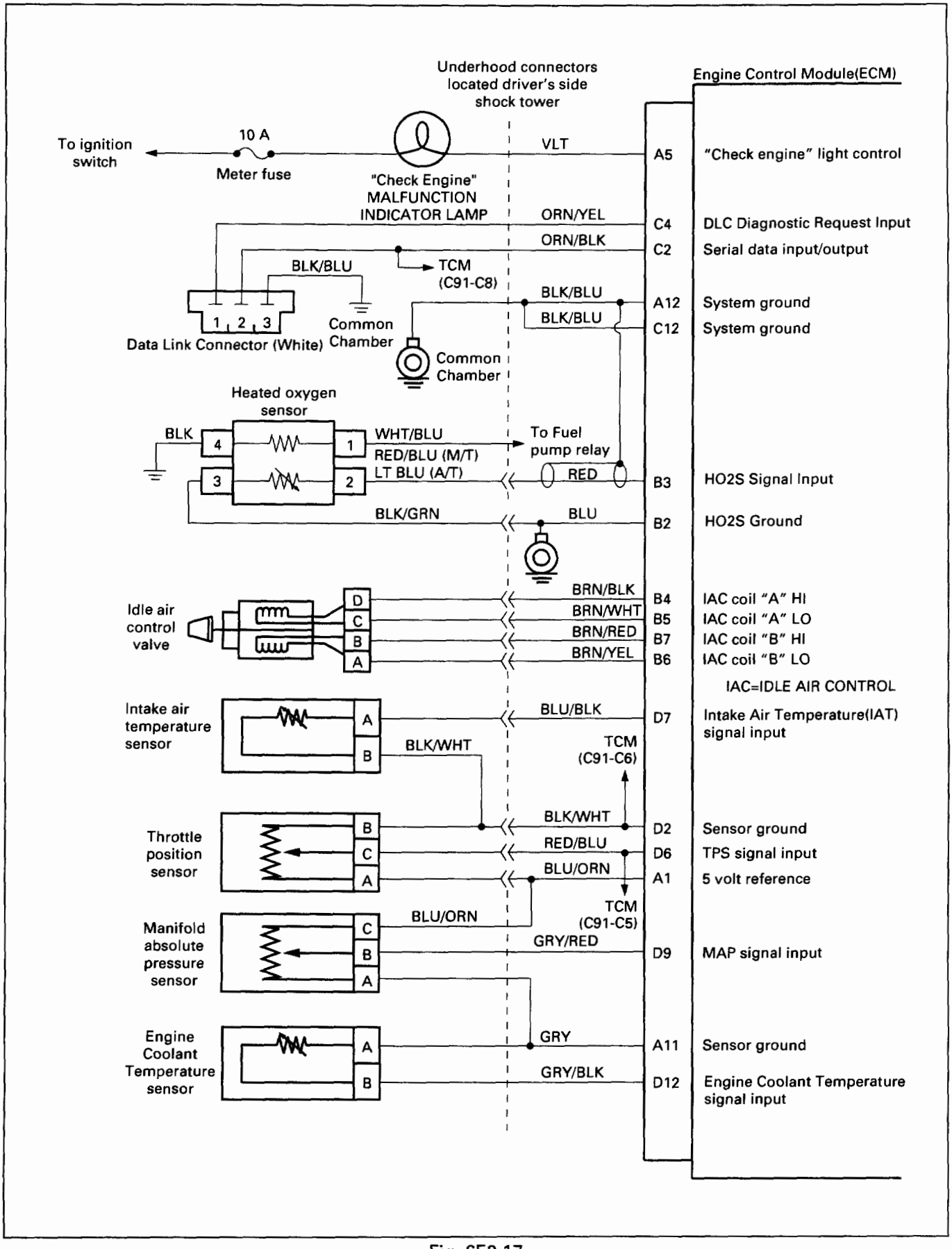

Fig. 6E2-17

ENGINE CONTROL MODULE WIRING DIAGRAM (2) (SOHC)

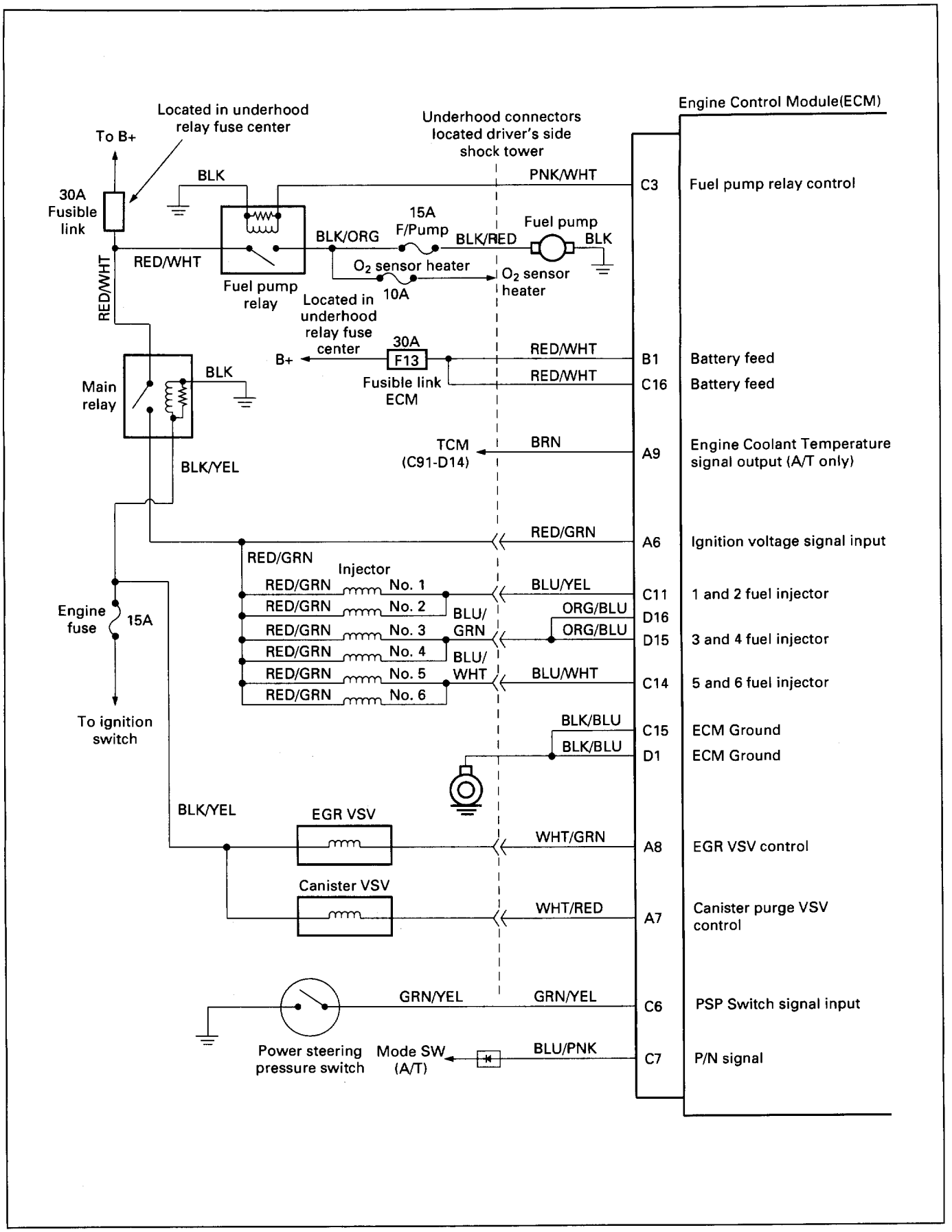

Fig. 6E2-18

ENGINE CONTROL MODULE WIRING DIAGRAM (3) (SOHC)

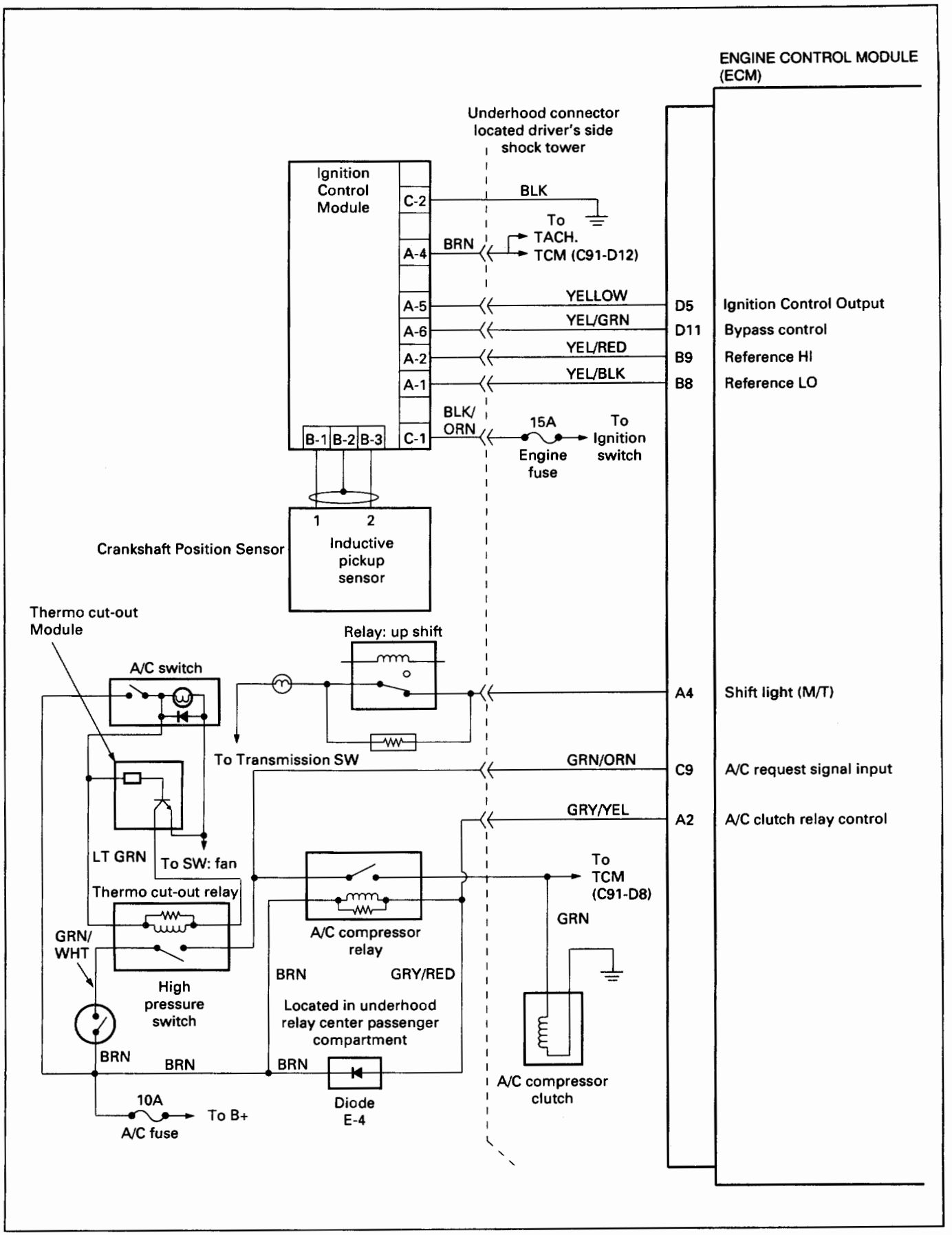

Fig. 6E2-19

ENGINE CONTROL MODULE WIRING DIAGRAM (1) (DOHC)

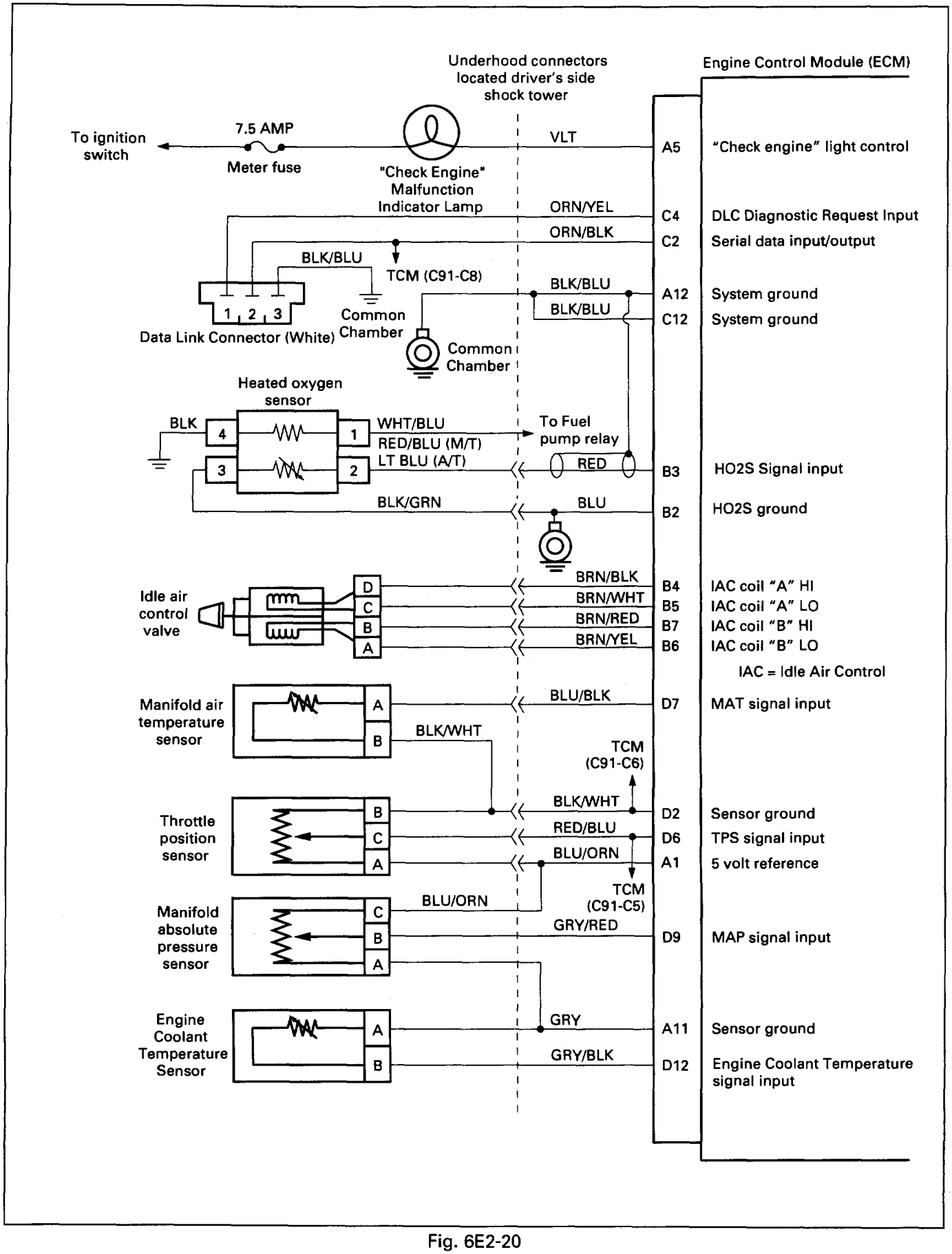

Fig. 6E2-20

ENGINE CONTROL MODULE WIRING DIAGRAM (2) (DOHC)

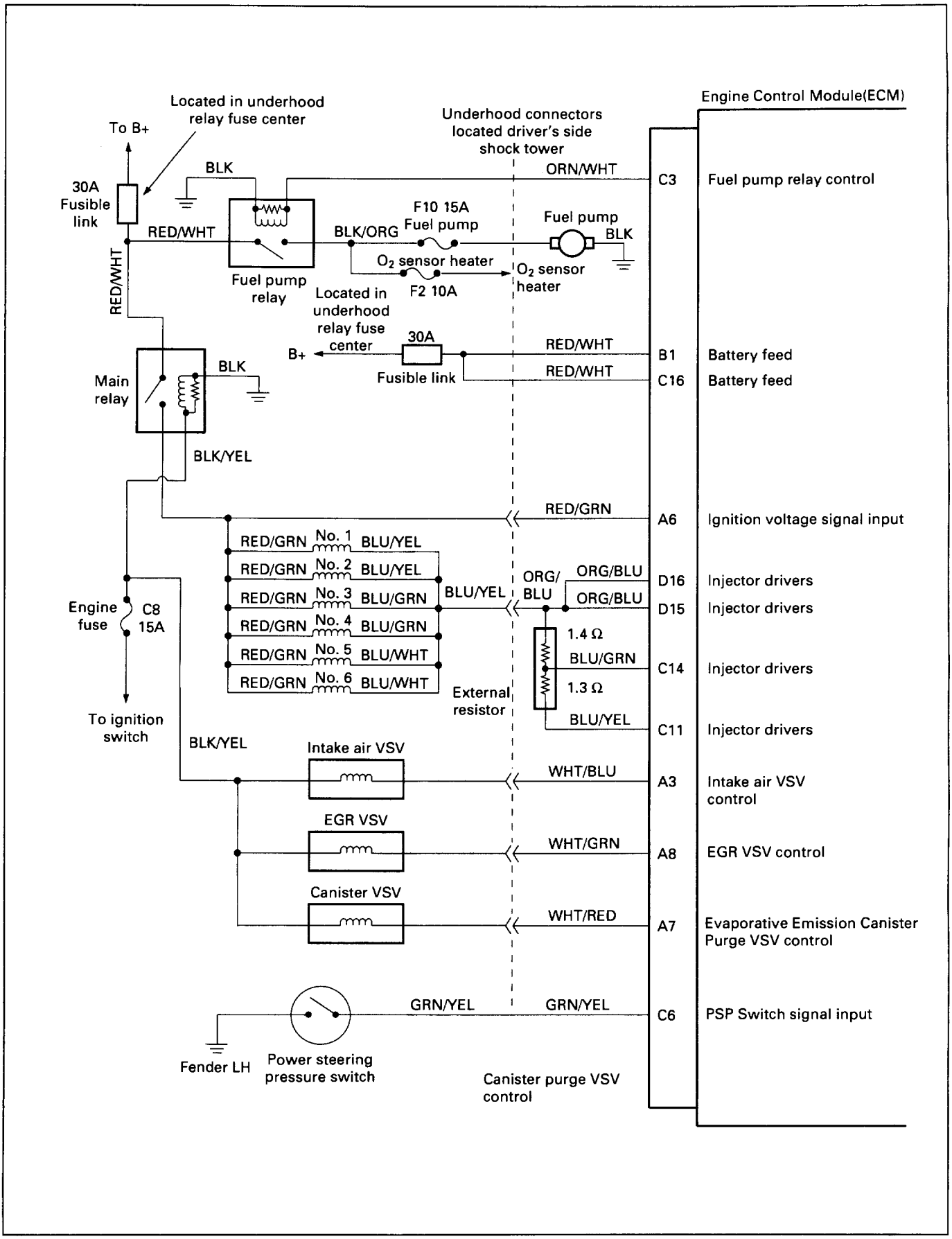

Fig. 6E2-21

ENGINE CONTROL MODULE WIRING DIAGRAM (3) (DOHC)

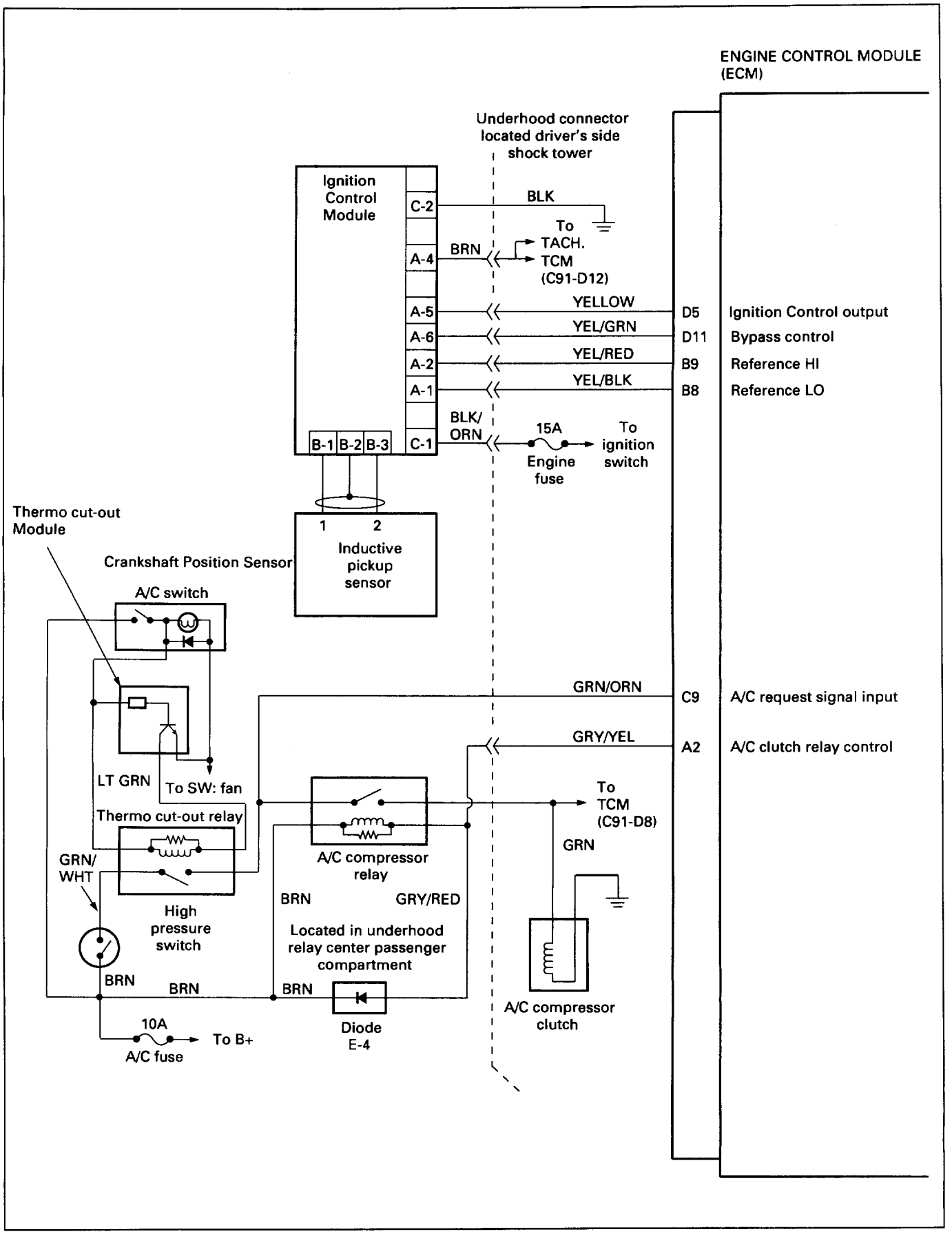

Fig. 6E2-22

ENGINE CONTROL MODULE WIRING DIAGRAM (4) (DOHC)

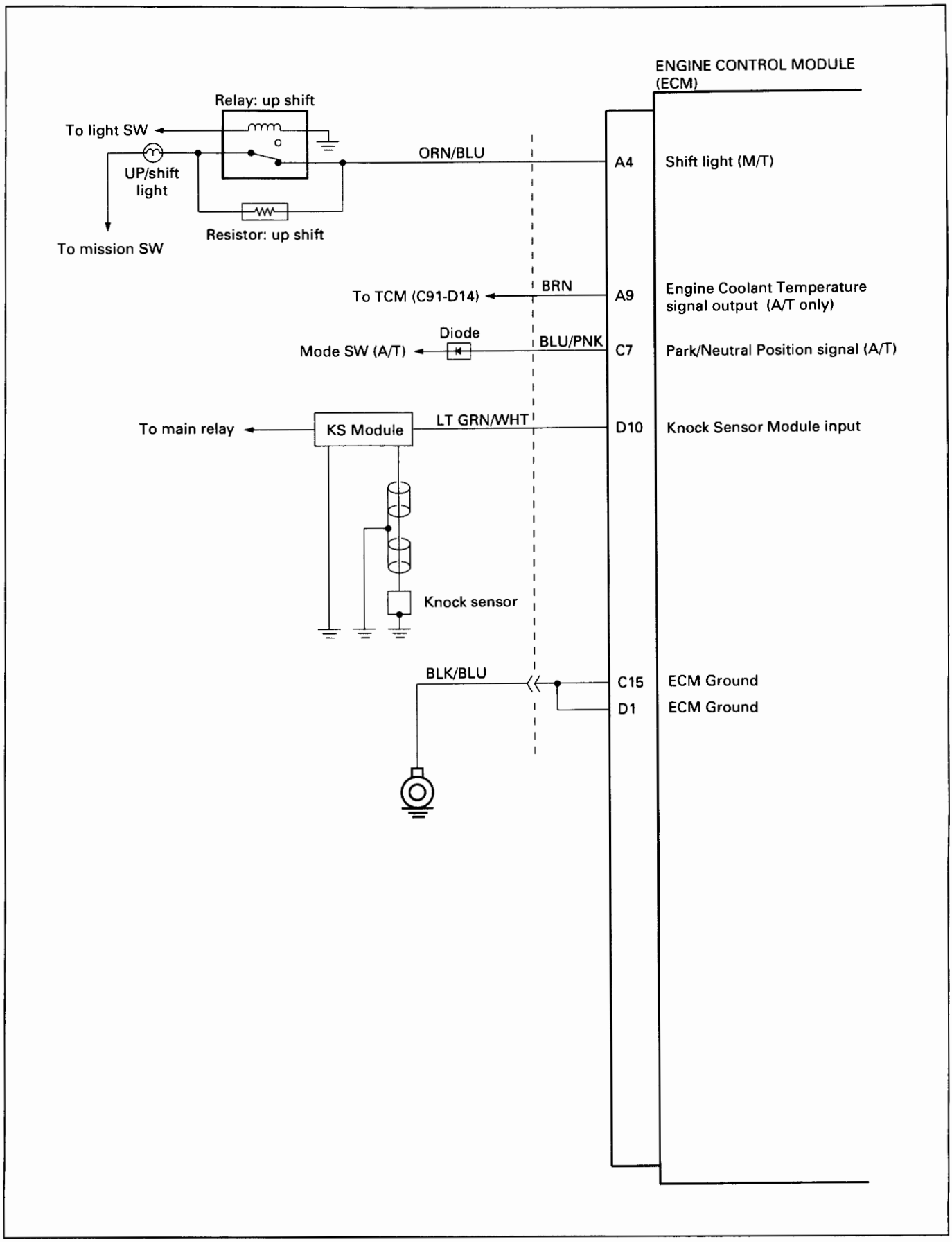

Fig. 6E2-23

ENGINE CONTROL MODULE (ECM) CONNECTOR IDENTIFICATION

This engine control module voltage chart is for use with a digital voltmeter to further aid in diagnosis. The voltages you get may vary due to low battery charge or other reasons, but they should be very close.

The following conditions must be before testing:

- Engine at operating temperature
- Engine idling in "Close Loop" (for "Engine Run" column)
- DLC Diagnostic terminal not grounded
- "Scan tool" not installed
- All voltages showing "Battery Position Voltage (B+)" indicates battery or charging voltage

VOLTAGE		DC CIRCUIT	PIN	WIRE COLOR
KEY "ON"	ENG. RUN			
① 5.0V	5.0V	THROTTLE POSITION (TP) SENSOR & MANIFOLD ABSOLUTE PRESSURE 5 VOLT REFERENCE	A1	BLU/ORN
B+ "ON" 0 "OFF"	B+ OFF O* ON	AIR CONDITIONING CLUTCH RELAY CONTROL	A2	GRY/YEL
B+	B+	INTAKE AIR VACUUM SWITCH VALVE (VSV) CONTROL	A3	WHT/BLU
0*	0* ②	SHIFT INDICATOR LAMP DRIVER	A4	ORN/BLU
O*	B+	"CHECK ENGINE" MALFUNCTION INDICATOR LAMP CONTROL	A5	VLT
B+	B+	IGNITION VOLTAGE SIGNAL INPUT	A6	RED/GRN
B+	B+	EVAPORATE EMISSION CANISTER PURGE VSV CONTROL	A7	WHT/RED
B+	B+	EXHAUST GAS RECIRCULATION VSV CONTROL	A8	WHT/GRN
⑥ VAR	VAR	TRANS TP SENSOR SIGNAL OUTPUT	A9	BRN
		NOT USED	A10	
O*	O*	SENSOR GROUND	A11	GRY
O*	O*	SYSTEM GROUND	A12	BLK/PNK

VOLTAGE		DC CIRCUIT	PIN	WIRE COLOR
KEY "ON"	ENG. RUN			
B+	B+	BATTERY FEED	B1	RED/WHT
0*	0*	OXYGEN SIGNAL GROUND	B2	BLU
.430MV	VALIES	OXYGEN SIGNAL INPUT	B3	RED
NOT USABLE	NOT USABLE	IDLE AIR CONTROL (IAC) COIL "A" HI	B4	BRN/BLK
NOT USABLE	NOT USABLE	IAC COIL "A" LO	B5	BRN/WHT
NOT USABLE	NOT USABLE	IAC COIL "B" LO	B6	BRN/YEL
NOT USABLE	NOT USABLE	IAC COIL "B" HI	B7	BRN/RED
O*	O*	ELECTRONIC IGNITION REFERENCE LO	B8	YEL/BLK
O*	1.1V-2.4V	ELECTRONIC IGNITION REFERENCE HI	B9	YEL/RED
		NOT USED	B10	
		NOT USED	B11	
		NOT USED	B12	GRY/BLU

VOLTAGE		DC CIRCUIT	PIN	WIRE COLOR
KEY "ON"	ENG. RUN			
		NOT USED	C1	
4.7V	4.7V	SERIAL DATA INPUT/OUTPUT	C2	ORN/BLK
④ B+	B+	FUEL PUMP RELAY CONTROL	C3	PNK/WHT
B+	B+	DLC DIAGNOSTIC REQUEST INPUT	C4	ORN/YEL
		NOT USED	C5	
⑤ B+	B+	POWER STEERING PRESSURE SWITCH SIGNAL INPUT	C6	GRN/YEL
⑥ 0*	0*	PARK/NEUTRAL POSITION INPUT	C7	BLU/PNK
		NOT USED	C8	
B+ "ON" 0 "OFF"	0 "ON" B+ "OFF"	AIR CONDITIONING REQUEST SIGNAL INPUT	C9	GRN/ORN
		NOT USED	C10	
B+	B+	FUEL INJECTOR DRIVER	C11	BLU/YEL
O*	O*	SYSTEM GROUND	C12	BLK/PNK
		NOT USED	C13	
B+	B+	FUEL INJECTOR DRIVER	C14	BLU/GRN
O*	O*	SYSTEM GROUND	C15	BLK/BLU
B+	B+	BATTERY FEED	C16	RED/WHT

VOLTAGE		DC CIRCUIT	PIN	WIRE COLOR
KEY "ON"	ENG. RUN			
O*	O*	SYSTEM GROUND	D1	BLK/BLU
O*	O*	SENSOR GROUND	D2	BLK/WHT
		NOT USED	D3	
		NOT USED	D4	
O*	.1-.2V	IGNITION CONTROL OUTPUT	D5	YEL
0.54V	VAR	TP SENSOR SIGNAL INPUT	D6	BLU/RED
VAR	VAR	INTAKE AIR TEMPERATURE SIGNAL INPUT D7 BLU/BLK	D7	BLU/BLK
③	③	VEHICLE SPEED SENSOR SIGNAL INPUT	D8	WHT/BLK
4.7V	1-2V	MANIFOLD ABSOLUTE PRESSURE SIGNAL INPUT	D9	GRY/RED
8-10V	VAR	K.S. MODULE INPUT	D10	LTGRN/WHT
O*	4.9V	IGNITION CONTROL BYPASS CONTROL	D11	YEL/GRN
VAR	VAR	ENGINE COOLANT TEMPERATURE SIGNAL INPUT	D12	GRY/BLK
		NOT USED	D13	
		NOT USED	D14	
B+	B+	FUEL INJECTOR DRIVER	D15	ORN/BLU
B+	B+	FUEL INJECTOR DRIVER	D16	ORN/BLU

* All voltages shown "0" should read less than .5 volts.

① Reads battery positive voltage for 2 seconds after ignition "ON" then should read 0 volts.

② B+ with shifter in gear and clutch pedal not depressed.

③ B+ to 0 volts depending on Position of drive wheels

④ B+ for 2 seconds.

⑤ 0 Volt with steering wheel cramped.

⑥ A/T Vehicles only

"SCAN TOOL" ON-BOARD DIAGNOSTIC (OBD) SYSTEM CHECK

The Diagnostic Circuit is an organized approach to identifying a problem created by an electronic engine control system malfunction. It must be the starting point for any drive ability complaint diagnosis, because it directs the service technician to the next logical step in diagnosing the complaint.

The "Scan tool" data listed in the table may be used for comparison, after completing the on-board diagnostic system check and finding the on-board diagnostics functioning properly with no trouble codes displayed. The "Typical Data Values" are an average of display values recorded from normally operating vehicles and are intended to represent what a normally functioning system would typically display.

A "SCAN tool" that displays faulty data should not be used, and the problem should be reported to the manufacturer. The use of a faulty "SCAN tool" can result in misdiagnosis and unnecessary parts replacement.

Only the parameters listed below are used in this manual for diagnosis. If a "Scan tool" reads other parameters, the values are not recommended for use in diagnosis. For more description on the values and use of the "Scan tool" to diagnosis engine control module inputs, refer to the applicable component diagnosis section in "Component System", Section "6E2-C". If all values are within the range illustrated, refer to "Symptoms", Section "6E2-B".

"SCAN TOOL" DATA

Test under following condition.
Idle / Upper radiator hose hot / Closed throttle / Park or neutral / "Closed Loop" / All Accessories "OFF"

"SCAN TOOL" position	Units displayed	Typical data value
Engine Speed	RPM	± 50 RPM from desired RPM in drive (A/T) ± 100 RPM from desired rpm in neutral (M/T)
Desired RPM	RPM	Engine control module idle command (varies with Engine load and temperature)
ENG COOL TEMP	Degrees Celsius/Fahrenheit	85 - 105 (185 - 221)
Intake Air Temperature (IAT)	Degrees Celsius/Fahrenheit	10 - 90 (50 - 199) (varies with Underhood temperature and sensor location)
Manifold Absolute Pressure	Volts	1 - 2 (varies with manifold and barometric pressure)
Barometric Pressure	Volts	Varies depending on altitude
Throttle Position	Volts	.50 - 1.25
Throttle Angle	0 — 100%	0 at Idle
BPW (base pulse width)	Milliseconds	0.0 to 499.9
Oxygen Sensor Volts	Volts	.1 — 1 (varies continuously)
S.T. Fuel Trim	Counts	108 — 154
L.T. Fuel Trim	Counts	116 — 145
Loop Status	Open/Closed	"Closed Loop"
Fuel Trim Cell	0/1	1
Spark Advance	Degrees	Varies continuously
Ignition Control Enable	No/Yes	Yes
Knock Retard	Degrees	0 - 45
Shift Light	OFF/ON	OFF
Idle Air Control	Counts (steps)	1 — 50 depending on engine load
PARK/NEUTRAL	P-N and R-D-L	Park/Neutral (AUTO)
A/C Request Switch	Yes/No	No
A/C Request	ON/OFF	"OFF"
Vehicle Speed	Mile per hour/KPH	0
Power Steering	NORMAL/HI PRESSURE	NORMAL
EGR Solenoid	ON/OFF	OFF
AIR Control Solenoid	ON/OFF	OFF
Induction Air Solenoid	OFF/ON	OFF ("ON" above 5000 RPM)
Air Fuel Ratio	Ratio	0 — 25.5:1
EVAP Purge	OFF/ON	OFF
Idle Throttle	No/Yes	Yes
Fuel Trim Enable	No/Yes	Yes
System Voltage	Volts	13 — 15
PROM ID	000	0 — 65535
Time From Start	00:00	

MEMO

ON-BOARD DIAGNOSTIC (OBD) SYSTEM CHECK

The on-board diagnostic system check is an organized approach to identifying a problem created by an Electronic Engine Control System malfunction. It must be the starting point for any driveability complaint diagnosis, because it directs the service technician to the next logical step in diagnosing the complaint. Understanding the chart and using it correclty will reduce diagnostic time and prevent the unnecessary replacement of good parts.

Test Description:

Number(s) below refer to circled number(s) on the following diagnostic chart.

① This check is to see if the Engine Control Module (ECM) can provide a ground path for the "Check Engine" malfunction indicator lamp, this is a bulb check. If it can do this, it confirms that the ECM has power, ground and is capable of some functions. If the malfunction indicator lamp is "OFF", Chart A-1 will check for both ignition feed and constant battery power to the ECM and the ECM grounds.

② This check is done to see if the ECM has the capability of performing internal diagnostics. Diagnostic trouble code 12 means there is no crankshaft position coming to the ECM, this is normal because the engine is not running.

③ This check is used to see if the ECM can supply serial data for Tech 1 "Scan tool" use.

④ Look at all the parameters to determine if on is not in a normal state with just the ignition "ON" and engine "OFF". In particular, look at the barometric pressure reading from the MAP sensor voltage and kPa values. Are they normal for your altitude? If not, use Chart C1-D. Look at the Engine Coolant Temperature (ECT) Sensor value to see if the value is shifted above or below where it should be. If so, see diagnostic aid chart on Diagnostic Trouble Code 14 chart.

⑤ This test is used to see if the cause of a "No-Start" is because of an ECM problem or the vehicle electrical system.

⑥ This check is to see if the ECM has any diagnostic codes stored in it memory to aid in diagnosing the customer complaint.

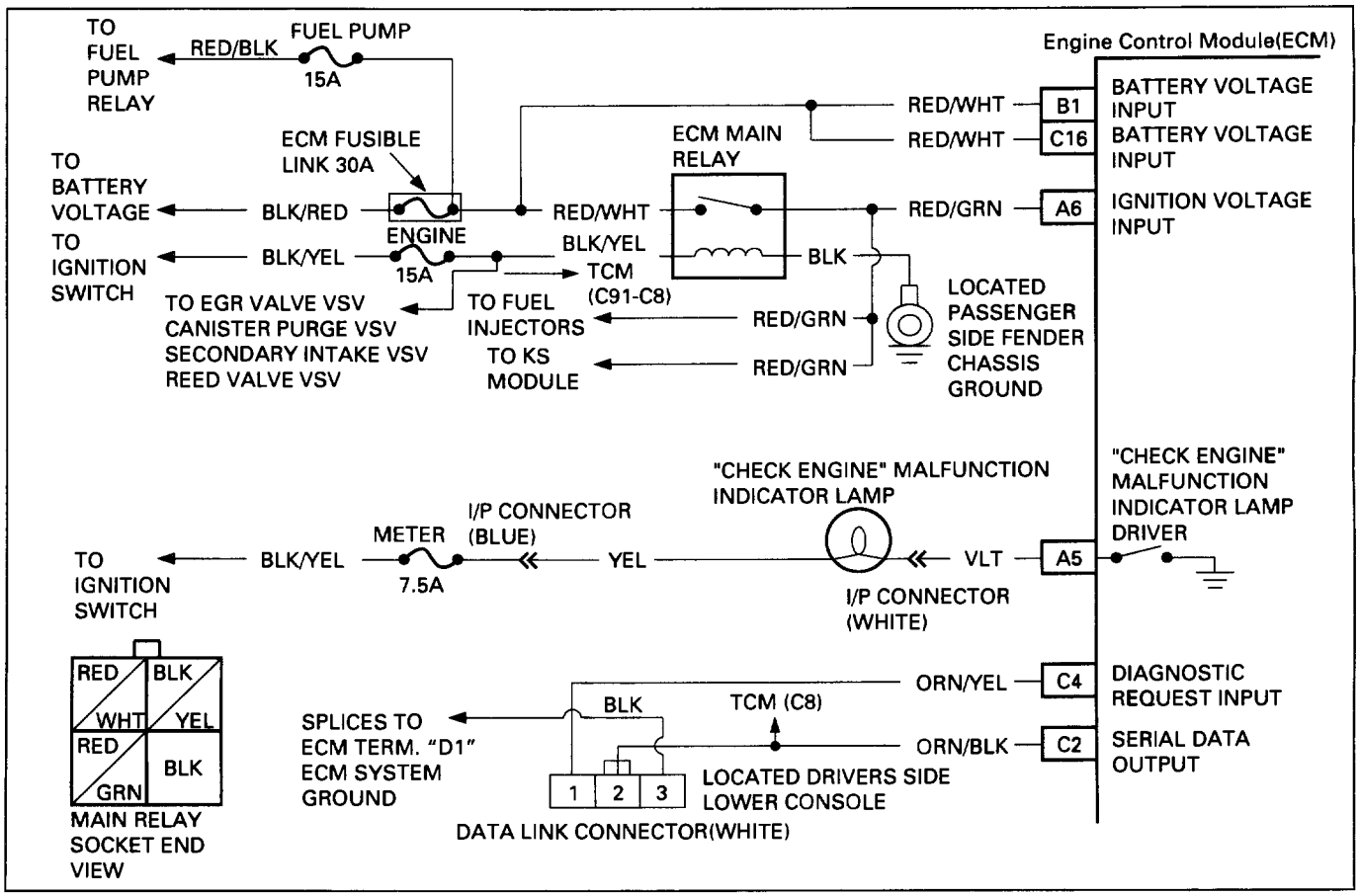

Fig. 6E2-23a

ON-BOARD DIAGNOSTIC (OBD) SYSTEM CHECK

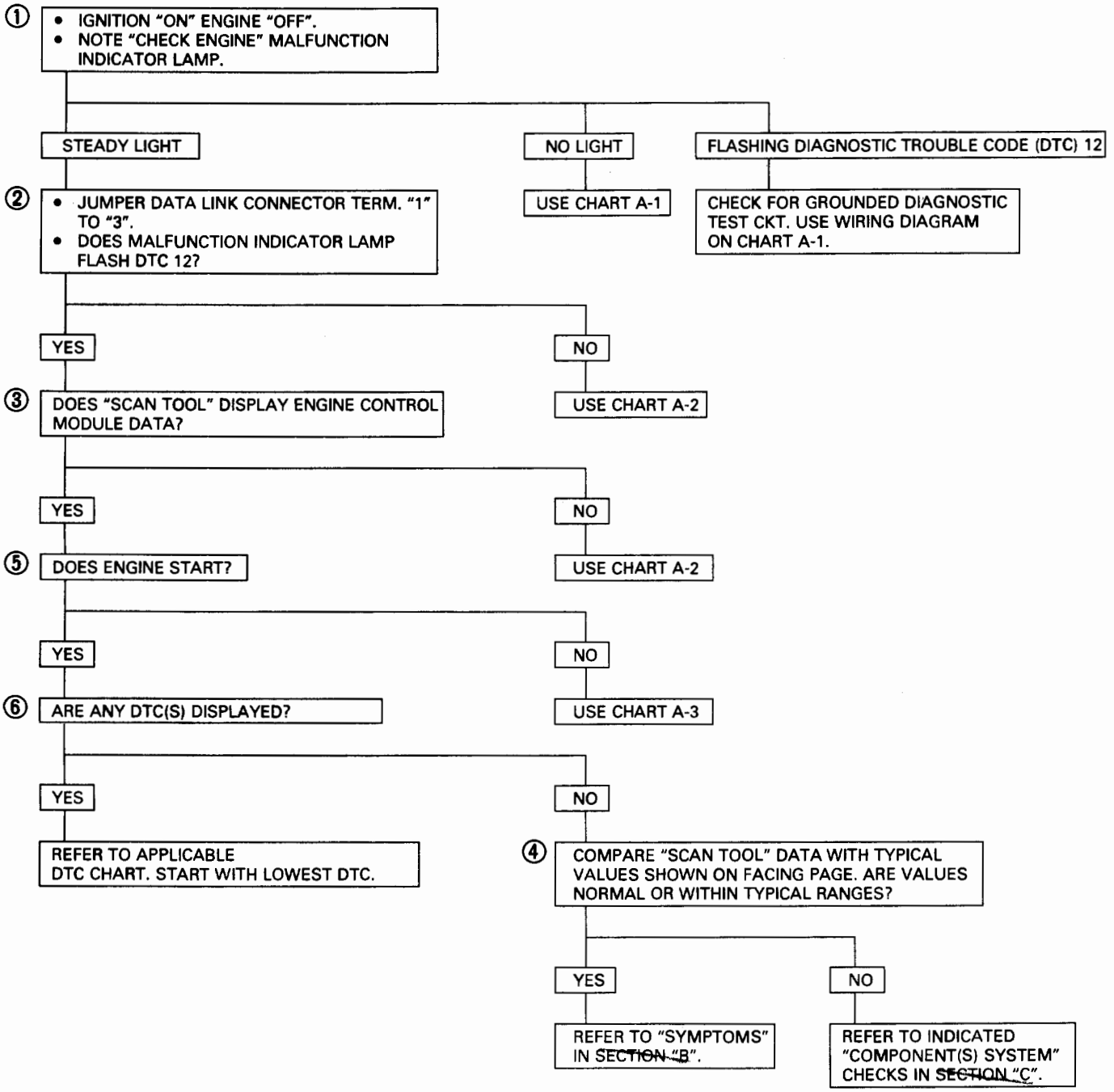

CHART A-1

WILL NOT FLASH DIAGNOSTIC TROUBLE CODE (DTC) 12
NO "CHECK ENGINE" MALFUNCTION INDICATOR LAMP (MIL)

Circuit Description:

There should always be a steady "Check Engine" Malfunction Indicator Lamp (MIL), when the ignition is "ON" and engine stopped. Battery positive voltage is supplied directly to the light bulb. The Engine Control Module (ECM) will control the light and turn it "ON" by providing a ground path through the VLT wire from the ECM to the bulb.

Test Description:

Numbers below refer to circled numbers on the diagnostic chart.

① The Test Light provides a ground source to the "Check Engine" MIL. If the circuit is okay the "Check Engine" MIL should be "ON" when the terminal "A5" is probed.

② Battery feed terminals "C16" and "B1" are protected by a 30 amp ECM fusible link in relay/fuse center under the hood near the battery. If terminals "C16" and "B1" have voltage, the ECM grounds or the ECM are faulty.

③ Using a test light connected to 12 volts, probe each of the system ground circuits to be sure a good ground is present. Refer to the "ECM Terminal End View" in front of this section for ECM pin locations of ground circuits.

Diagnostic Aids;

Engine runs OK, check;

- Faulty light bulb.
- VLT wire open.
- Meter fuse blown. This will result in no oil or generator lights, seat belt reminder, etc.

Engine cranks, but will not run.

- Continuous battery-fuse or fusible link open.
- ECM ignition fuse open.
- Battery RED/WHT wire to ECM open.
- Ignition RED/GRN wire to ECM open.
- Poor connection to ECM.

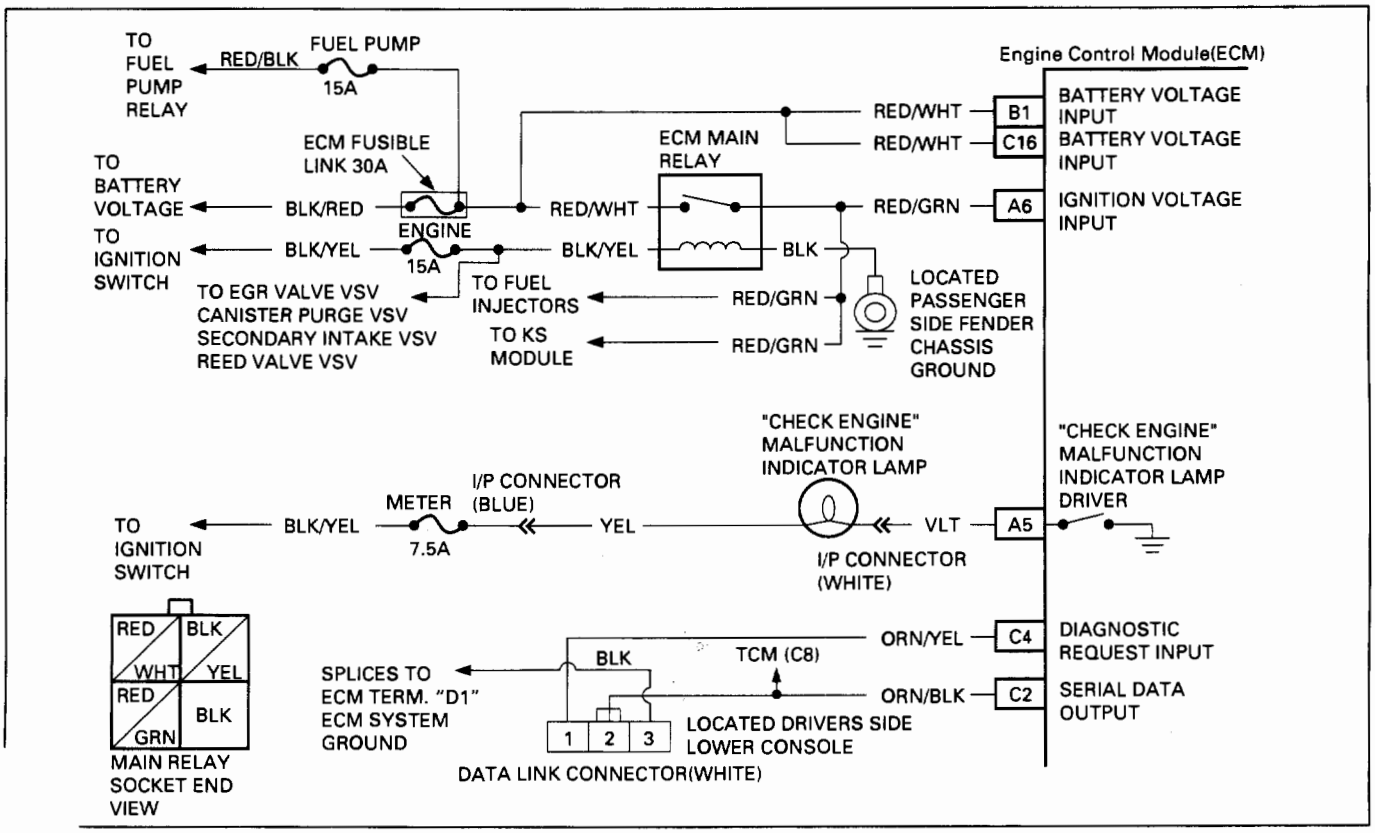

Fig. 6E2-24

CHART A-1

WILL NOT FLASH DIAGNOSTIC TROUBLE CODE (DTC) 12
NO "CHECK ENGINE" MALFUNCTION INDICATOR LAMP (MIL)

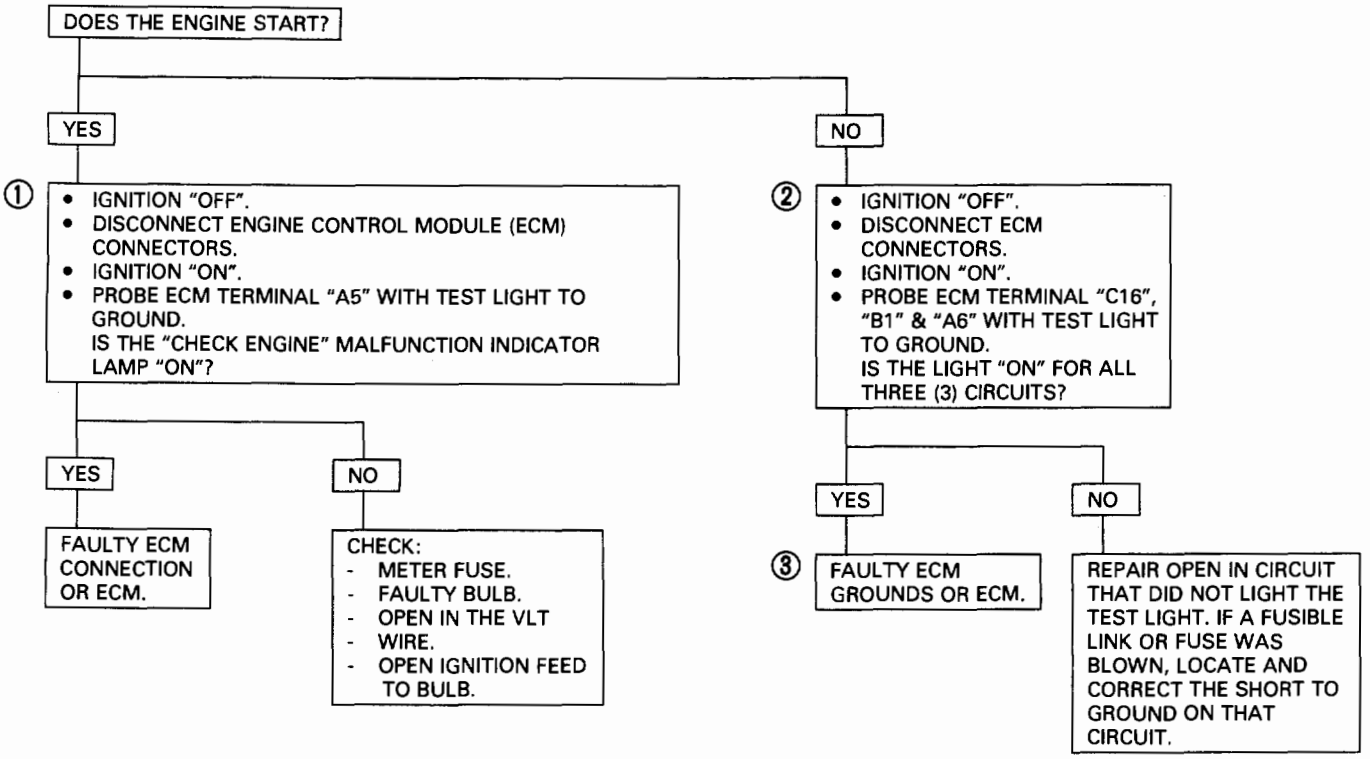

CHART A-2

NO DATA LINK CONNECTOR (DLC) DATA OR WILL NOT FLASH DIAGNOSTIC TROUBLE CODE (DTC) 12 "CHECK ENGINE" MALFUNCTION INDICATOR LAMP (MIL) "ON" STEADY

Circuit Description:

There should always be a steady "Check Engine" malfunction indicator lamp when the ignition is "ON" and engine stopped. Battery positive voltage is supplied directly to the light bulb. The Engine Control Module (ECM) will turn the light "ON" by grounding VLT wire at the ECM.
With the diagnostic test terminal grounded, the light should flash a diagnostic trouble code (DTC) 12, followed by any trouble code(s) stored in memory.
A steady light suggests a short to ground in the light control VLT wire, or an open in diagnostic ORN/YEL wire.

Test Description:

Numbers below refer to circled numbers on the diagnostic chart.

① If there is a problem with the ECM that causes a "Scan tool" to not read Serial data, then the ECM should not flash a DTC 12. If DTC 12 does flash, be sure that the "Scan tool" is working properly on another vehicle. If the "Scan tool" is functioning properly and ORN/BLK wire is OK, the ECM, may be at fault for the NO data link connector symptom.
② If the light goes "OFF" when the ECM connector is disconnected, then, the VLT wire is not shorted to ground.
③ This step will check for an open diagnostic request ORN/YEL wire.
④ At this point, the "Check Engine" malfunction indicator lamp wiring is OK. The problem is a faulty ECM. If DTC 12 does not flash, the ECM should be replaced.

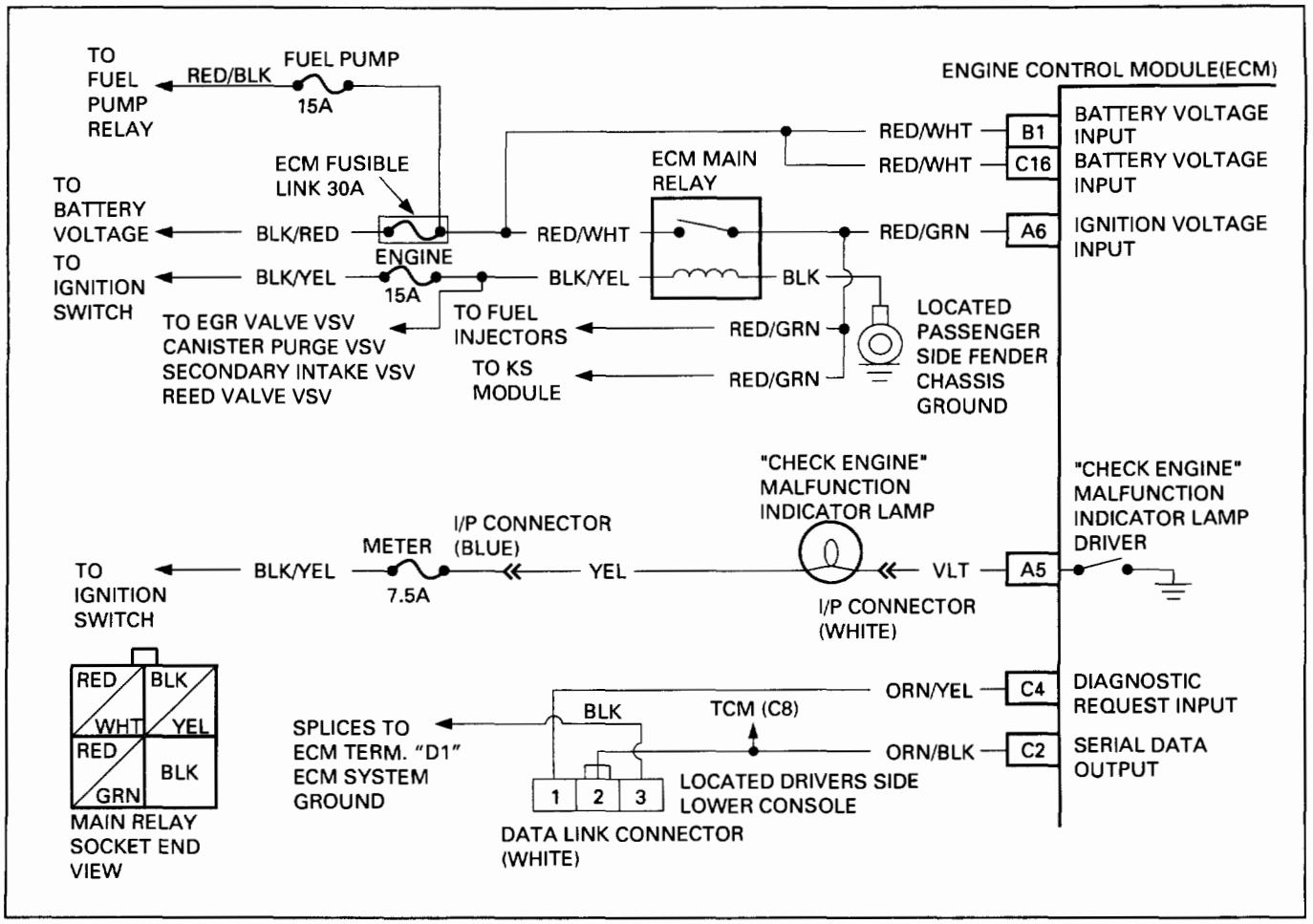

Fig. 6E2-25

Guvd as - U41a

CHART A-2

NO DATA LINK CONNECTOR (DLC) DATA OR WILL NOT FLASH DIAGNOSTIC TROUBLE CODE (DTC) 12 "CHECK ENGINE" MALFUNCTION INDICATOR LAMP (MIL) "ON" STEADY

- IGNITION "ON", ENGINE "OFF".
  IS THE "CHECK ENGINE" MALFUNCTION INDICATOR LAMP (MIL) "ON"?

YES

- GROUND DATA LINK CONNECTOR, DIAGNOSTIC TERMINAL "1" AND "3".
  DOES LIGHT FLASH DIAGNOSTIC TROUBLE CODE (DTC) 12?

NO

②
- IGNITION "OFF".
- DISCONNECT ENGINE CONTROL MODULE (ECM) CONNECTORS.
- IGNITION "ON" AND NOTE MIL.

③ LIGHT "OFF"

- IGNITION "OFF".
- RECONNECT ECM.
- IGNITION "ON", ENGINE "OFF", DIAGNOSTIC TEST TERMINAL NOT GROUNDED.
- BACK PROBE ECM TERMINAL "C4" WITH TEST LIGHT TO GROUND.
  LEAVE CONNECTED AND WATCH MIL.

NO DTC 12

④ REPLACE ECM

DTC 12

CHECK FOR OPEN IN ORN/YEL WIRE.
IF OK, CHECK FOR OPEN CIRCUIT BETWEEN DATA LINK CONNECTOR TERMINAL "3" AND GROUND.

LIGHT "ON"

REPAIR SHORT TO GROUND IN MIL CIRCUIT.

YES

① IF PROBLEM WAS NO DATA LINK CONNECTOR DATA: CHECK SERIAL DATA CIRCUIT FOR OPEN OR SHORT TO GROUND BETWEEN ECM AND DATA LINK CONNECTOR. IF OK, IT IS A FAULTY ECM.

NO

USE CHART A-1

CLEAR DTC(S) AND CONFIRM "CLOSED LOOP" OPERATION AND NORMAL "CHECK ENGINE" MALFUNCTION INDICATOR LAMP OPERATION.

CHART A-3

(Page 1 of 3)
ENGINE CRANKS BUT WILL NOT RUN

Circuit Description:

Before using this chart, battery condition, engine cranking speed, and fuel quantity should be checked and verified as being OK.

Test Description:

Numbers below refer to circled numbers on the diagnostic chart.

① A malfunction indicator lamp "ON" is basic test to determine if there is battery positive voltage and ignition voltage supplied to the Engine Control Module (ECM). No data link connector data may be due to an ECM problem. CHART A-2 will diagnose the ECM. If throttle position sensor voltage is over 2.5 volts, the engine may be in the "clear flood" mode, which will cause starting problems. The engine will not start without reference pulses and, therefore, the "Scan tool" should indicate engine speed during cranking.

② Because the electronic ignition system uses two plugs and wires to complete the circuit of each coil, the opposite spark should be left connected. If revolution per minute was indicated during crank, the ignition control module is receiving a crank signal, but no spark at this test indicates the Ignition Control Module (ICM) is not triggering the coils.

③ The test light should blink, indicating the ECM is in control of the injectors. How bright the light blinks is not important. However, the test light should be a J-34730-3 or equivalent.

④ This test will determine if the ignition control module is not generating the reference pules or if the wiring or ECM are at fault. By touching and removing a test light to 12 volts on YEL/RED wire, a reference pulse should be generated. If revolution per minute is indicated, the ECM and wiring are OK.

⑤ High resistance in the spark plug wire could cause a "no start" condition. If a spark plug wire is found to be faulty, replace it and retest system.

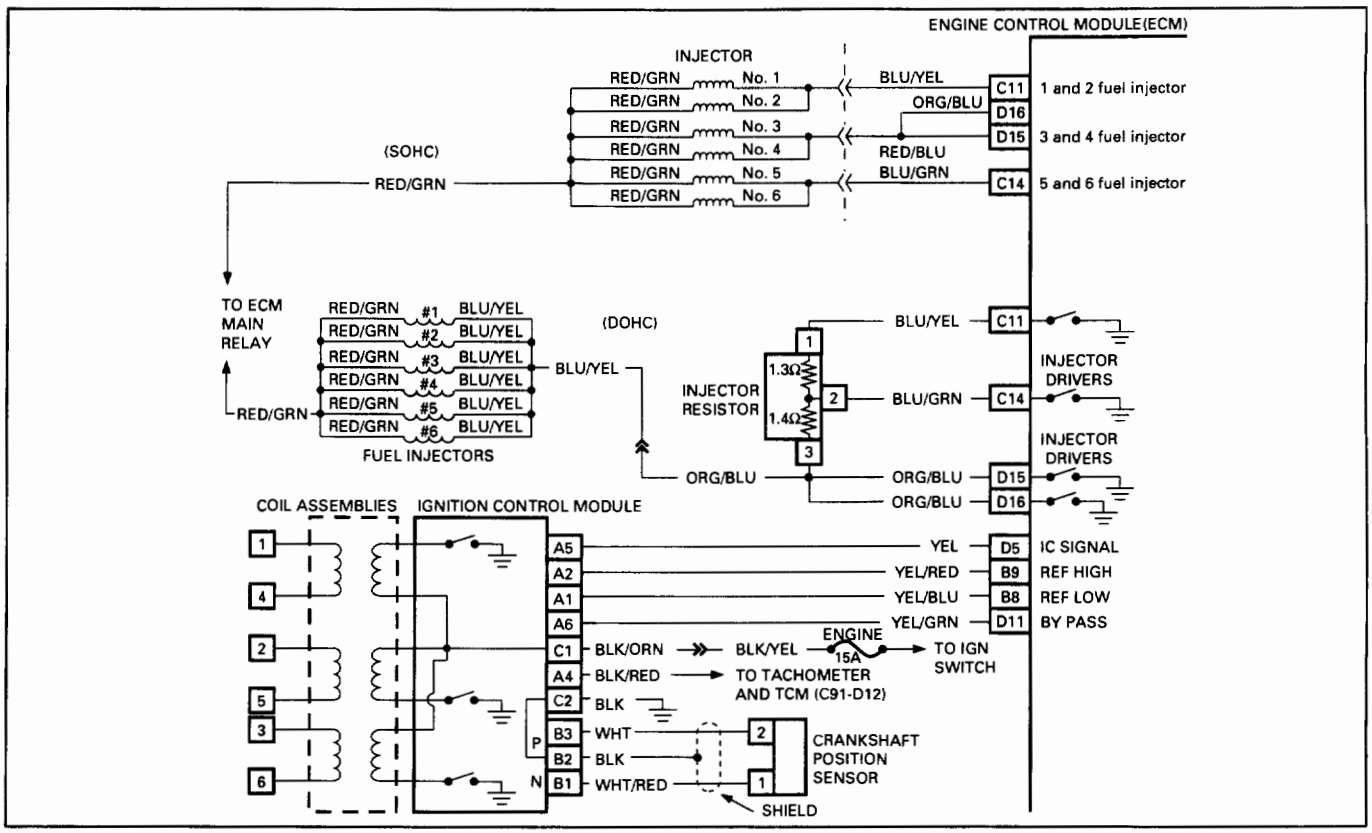

Fig. 6E2-26

CHART A-3

(Page 1 of 3)
ENGINE CRANKS BUT WILL NOT RUN

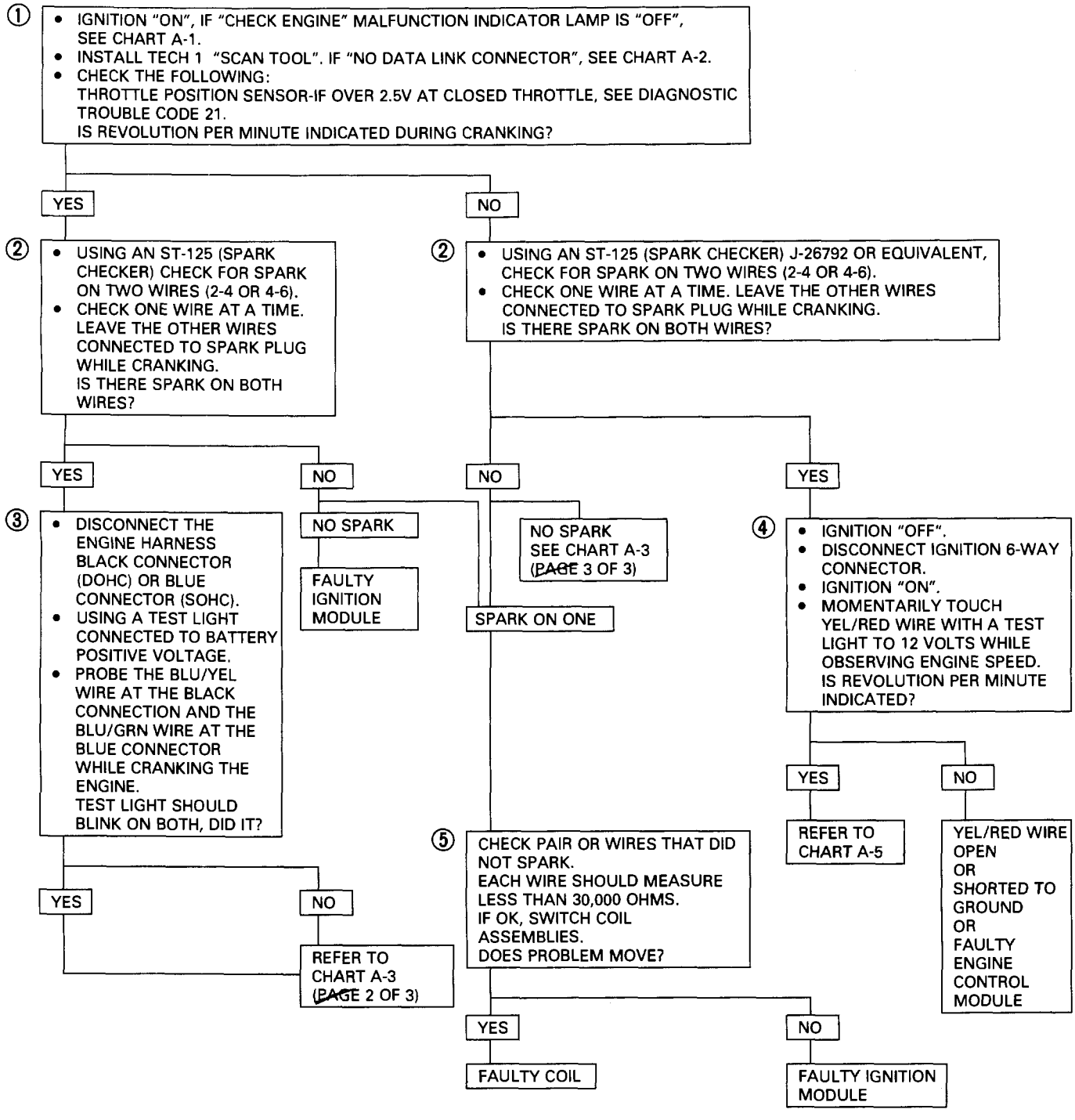

CLEAR DIAGNOSTIC TROUBLE CODES AND CONFIRM "CLOSED LOOP" OPERATION AND NORMAL "CHECK ENGINE" MALFUNCTION INDICATOR LAMP OPERATION.

CHART A-3

(Page 2 of 3)
ENGINE CRANKS BUT WILL NOT RUN

Test Description:

Numbers below refer to circled numbers on the diagnostic chart.

① This will check the injector harness for an "open" or "shorted" circuit after the engine harness connector.
② A shorted or resistance injector could be the cause of a "cranks but won't run" symptom.
③ Test for a short to ground in the injector driver circuits.
④ Check for voltage at the injector. An "open" in the RED/GRN wire at the splice from the main relay would result in a "crank but won't run" symptom.
⑤ Test the engine control module for a injector pulse.
⑥ A faulty resistor module could be the cause of a no start. If module was found to be faulty, recheck the engine control module after replacement of the resistor module.

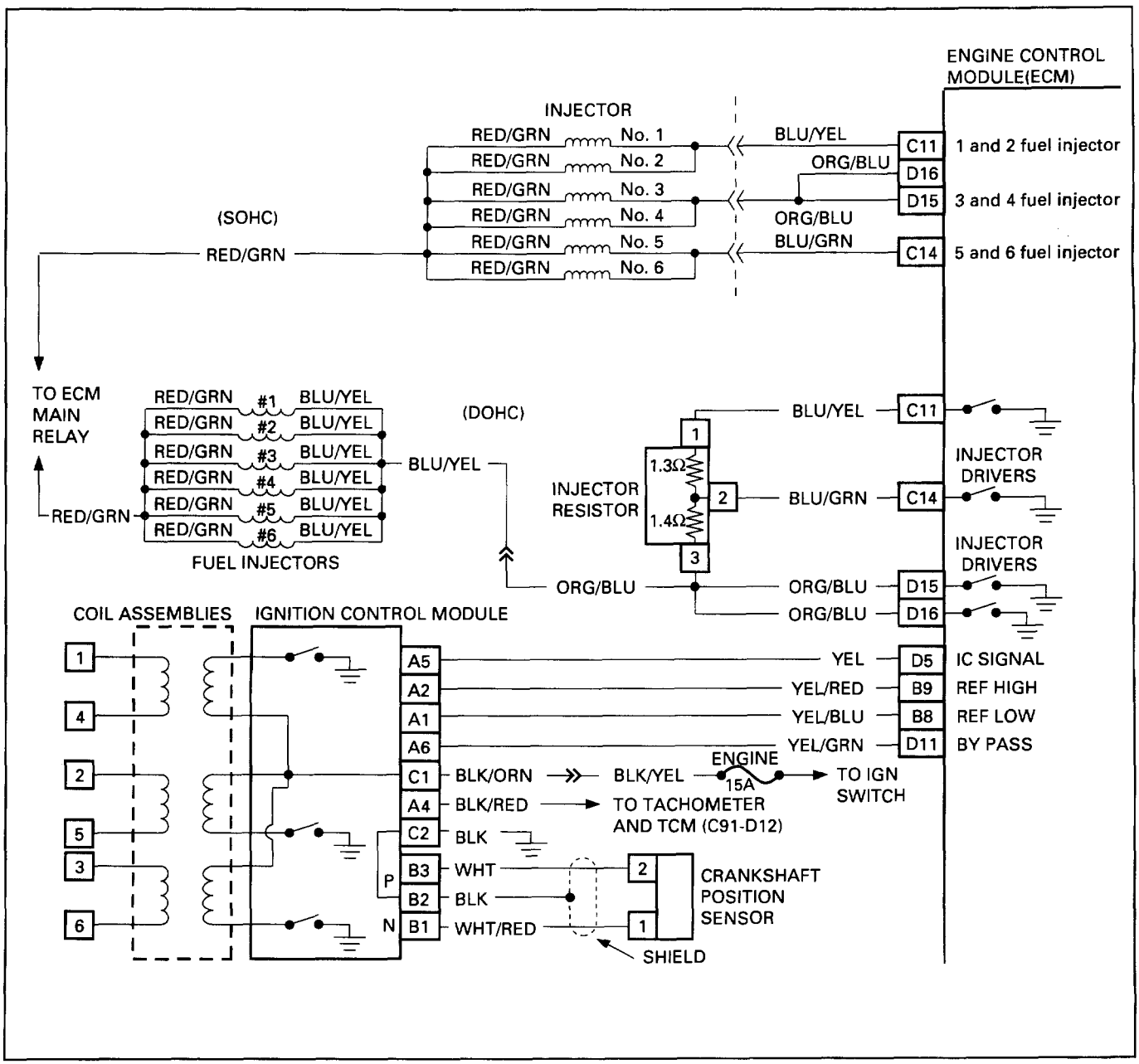

Fig. 6E2-27

CHART A-3

(Page 2 of 3)
ENGINE CRANKS BUT WILL NOT RUN

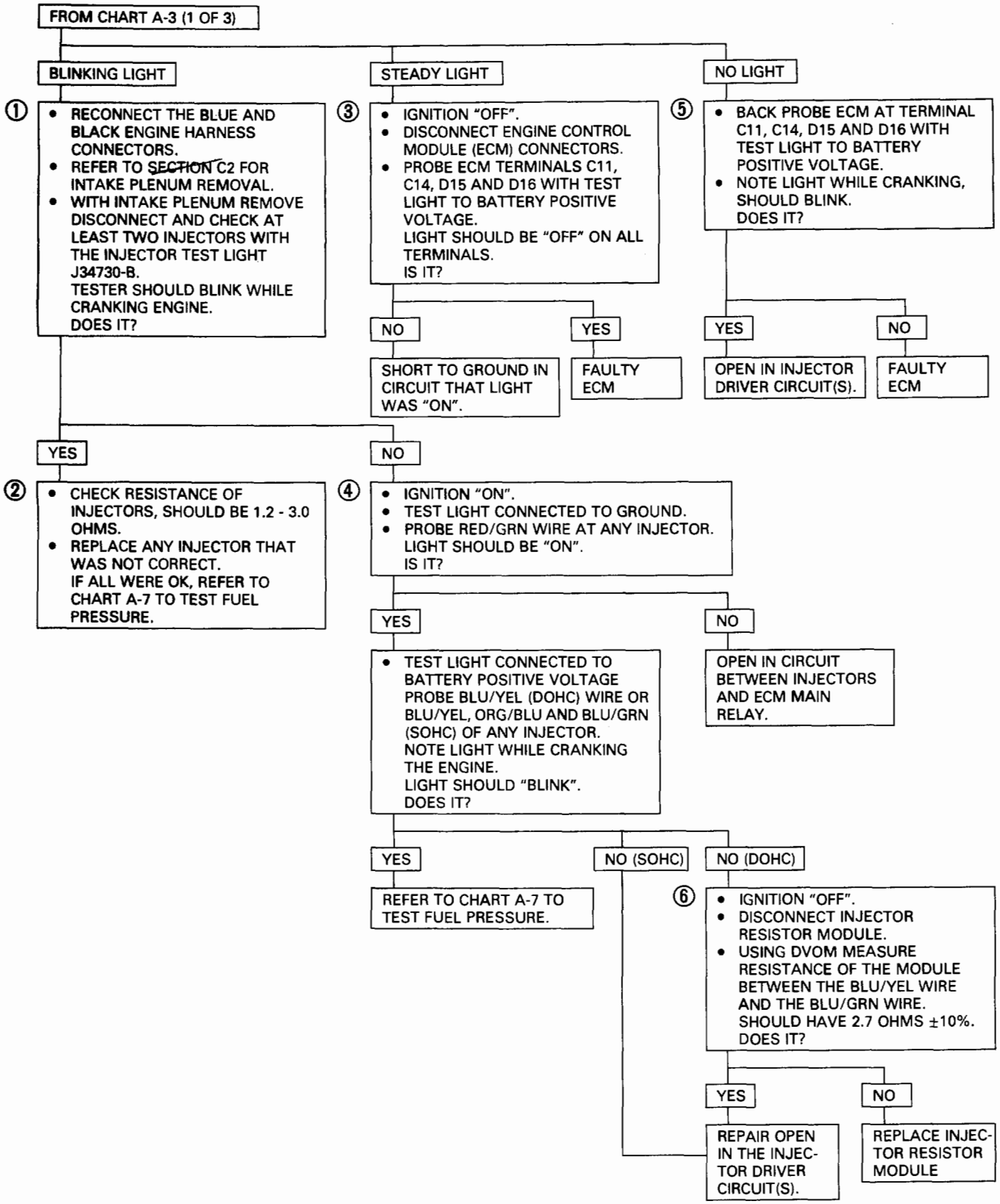

CHART A-3

(Page 3 of 3)
ENGINE CRANKS BUT WILL NOT RUN

Circuit Description:

If the "Scan tool" did not indicate a engine speed and there is no spark present at the plugs, the problem lies in the electronic ignition system or the power and ground supplies to the module.
The magnetic crankshaft position is used to determine engine crankshaft position sensor much the same way as the pick-up coil did in distributor type systems. The sensor is mounted in the block near a seven slot wheel on the crank shaft. The rotation of the wheel creates a flux change in the sensor which produces a voltage signal. The Ignition Control Module (ICM) then processes this signal and creates the reference pulses needed by the engine control module and the signal triggers the correct coil at the correct time.

Test Description: Numbers below refer to circled numbers on the diagnostic chart.

① This test will determine if the 12 volt supply and a good ground is available at the ICM.

② Tests for battery positive voltage in Ignition Feed Circuit to the ICM.

③ Checks for continuity of the crankshaft position sensor and connections.

④ Voltage will vary in this test depending on cranking speed of engine.

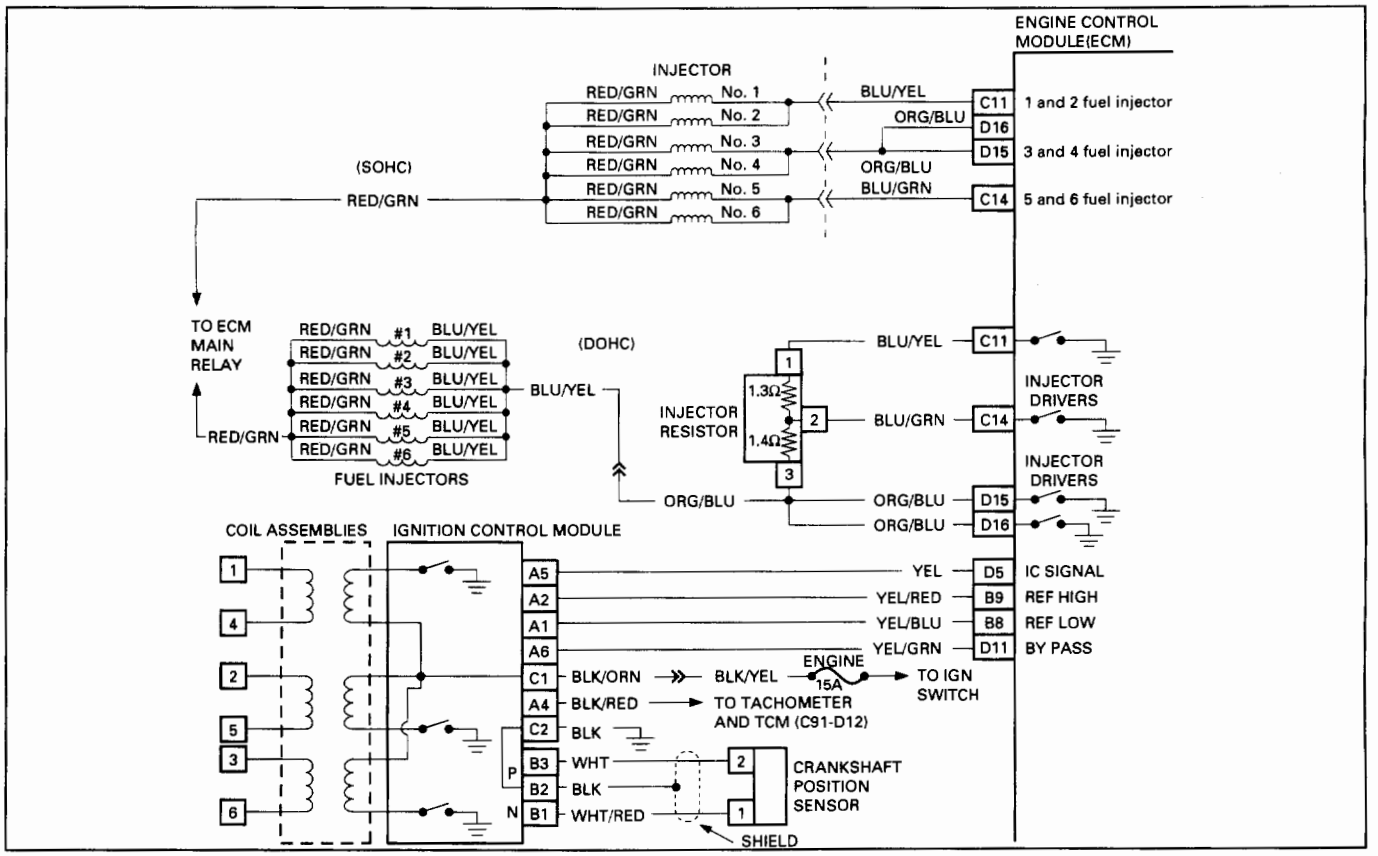

Fig. 6E2-28

CHART A-3

(Page 3 of 3)
ENGINE CRANKS BUT WILL NOT RUN

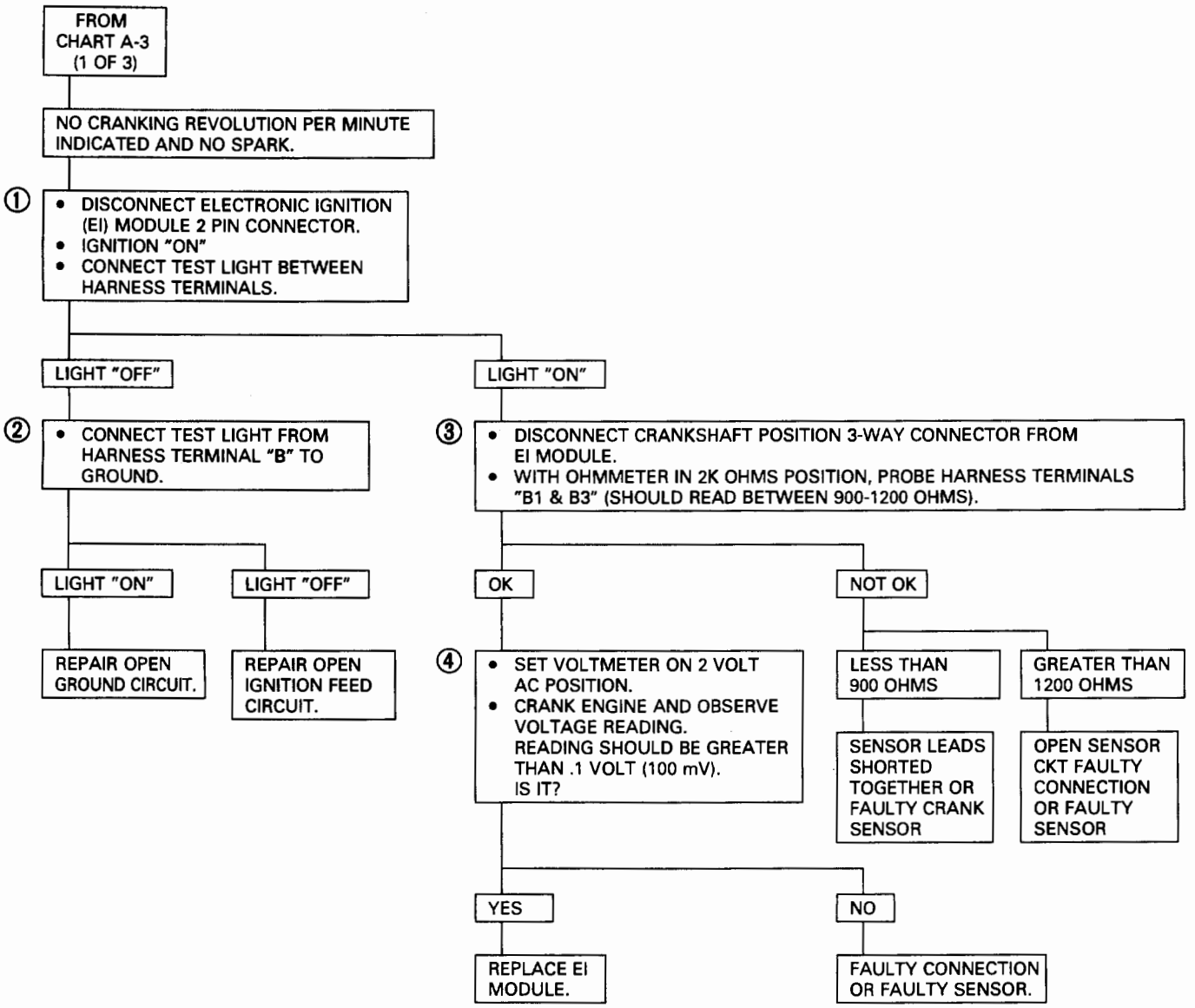

CHART A-5

FUEL PUMP RELAY CIRCUIT

Circuit Description:

When the ignition switch is turned "ON", the Engine Control Module (ECM) will activate the fuel pump relay and operate the in-tank fuel pump. The fuel pump will operate as long as the engine is cranking or running and the ECM is receiving ignition reference pulses. If there are no reference pulses, the ECM will shut "OFF" the fuel pump within 2 seconds after key "ON".

Test Description:

Numbers below refer to circled numbers on the diagnostic chart.

① Checks for the presence Battery Position Voltage at switching portion of fuel pump relay.
② Checks circuit between fuel pump relay and ground (including the fuel pump).
③ This test will confirm if voltage is available to the relay coil.

Diagnostic Aids:

A visual inspection of wiring and connectors should be made if an intermittent problem exists. For more information, see "Intermittents" in "Symptoms," Section "6E2-B".

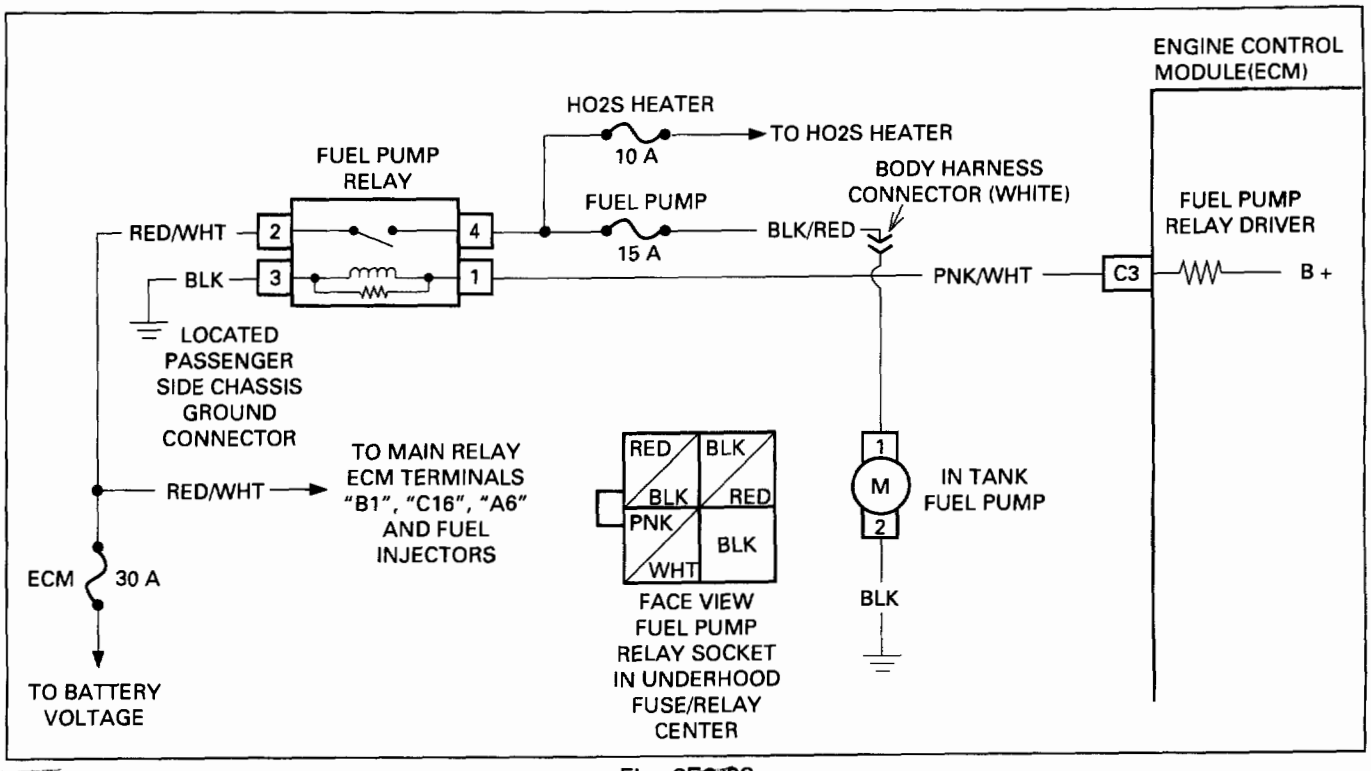

~~Fig. 6E2-29~~

FUEL PUMP RELAY CIRCUIT

CHART A-5

FUEL PUMP RELAY CIRCUIT

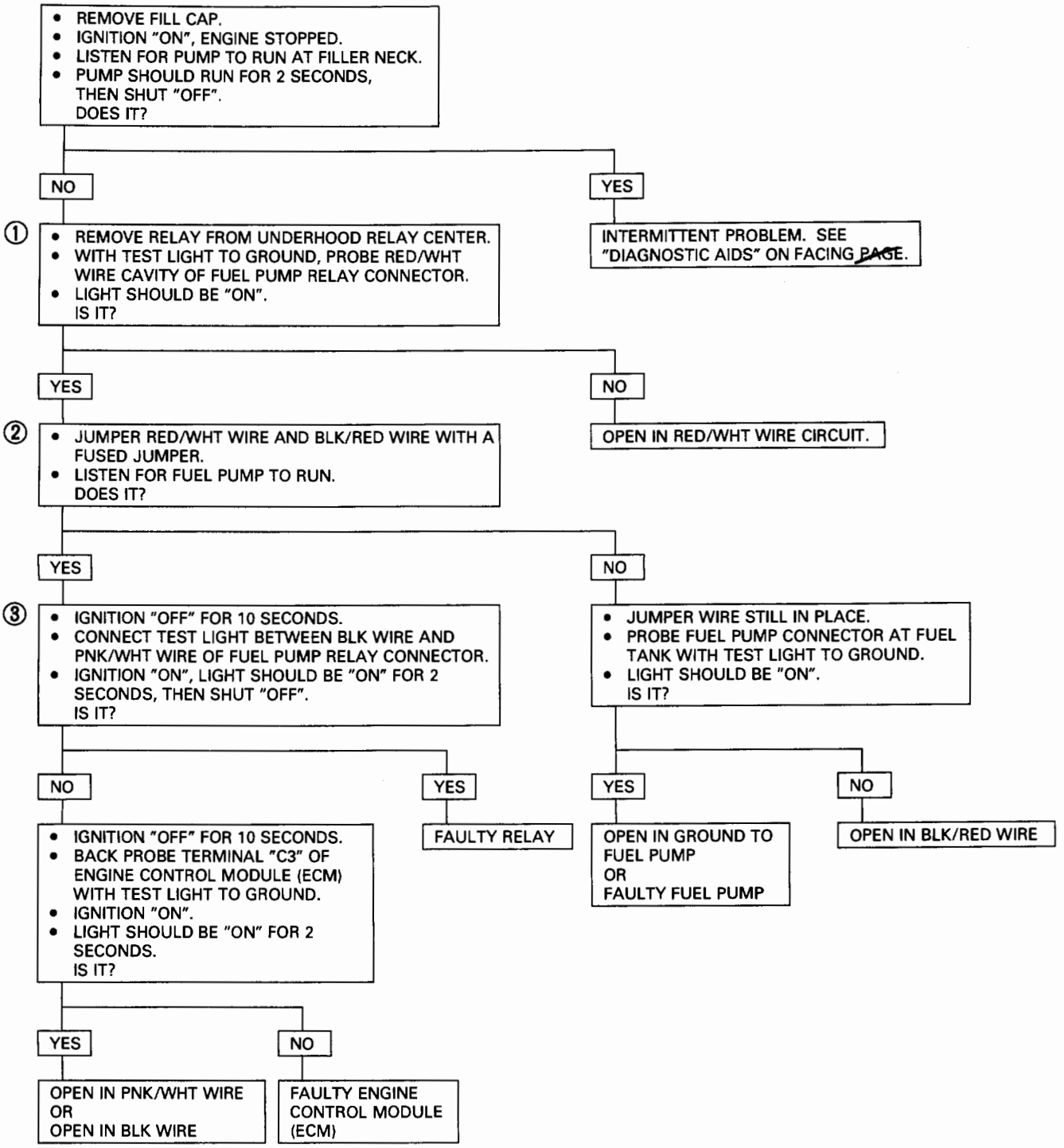

CHART A-7

FUEL SYSTEM PRESSURE TEST
(Page 1 of 3)

Circuit Description:

The fuel pump delivers fuel to the fuel rail and injectors, where the system pressure is controlled from 280 to 320 kPa (41 to 46 psi) by the fuel pressure control valve. Excess fuel is returned to the fuel tank. When the engine is stopped, the pump can be energized by jumping the fuel pump relay connector with a fused jumper.

Test Description:

Numbers below refer to circled numbers on the diagnostic chart.

① Use pressure gauge J-34730-1. Wrap a shop towel around the fuel pressure tap to absorb any small amount of fuel leakage that may occur when installing the gauge. (The pressure will not leak down after the fuel pump is stopped on a correctly functioning system.)

② While the engine is idling, manifold absolute pressure is low (high vacuum). When this is applied to the fuel regulator diaphragm the vacuum will result in a lower fuel pressure at about 190 - 200 kPa (25 - 30 psi)

③ The application of high vacuum to the fuel pressure control valve should result in a fuel pressure drop.

④ Fuel pressure leak-down may be caused by one of the following:

- Fuel pump check valve not holding.
- Pump coupling hose leaking.
- Fuel pressure control valve leaking.
- Injector sticking open/leaking.

Diagnostic Aids:

Improper fuel system pressure may contribute to one or all of the following symptoms:

- Cranks but will not run.
- Diagnostic trouble code 44 or 45.
- Cutting out (May feel like ignition problem).
- Hesitation, loss of power or poor fuel economy.

Refer to "Symptoms", Section "6E2-B".

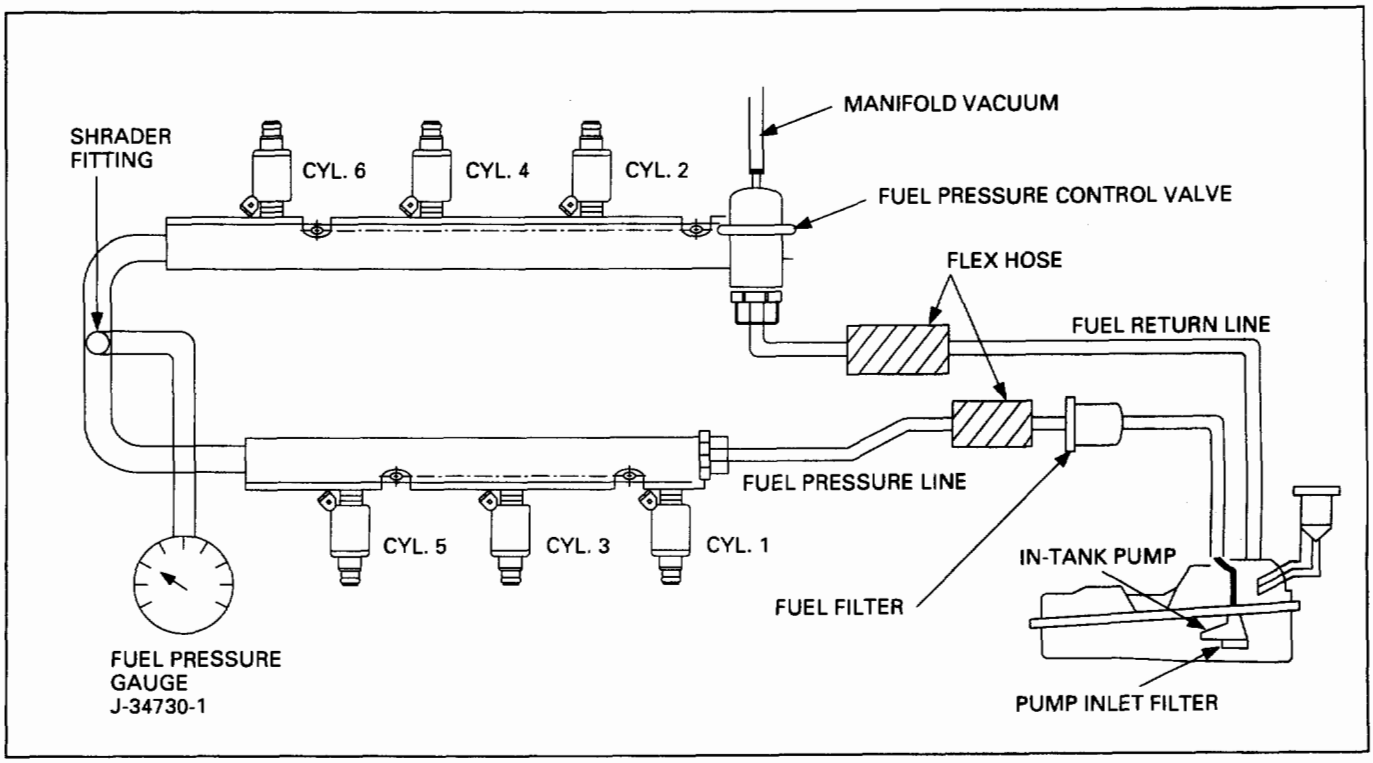

Fig. 6E2-30

CHART A-7

(Page 1 of 3)
FUEL SYSTEM PRESSURE TEST

NOTE: FUEL SYSTEM IS UNDER PRESSURE. TO AVOID FUEL SPILLAGE, REFER TO FIELD SERVICE PROCEDURES FOR TESTING OR REPAIRS REQUIRING DISASSEMBLY OF FUEL LINES OR FITTINGS. REFER TO PAGE 3 OF 3 OF THIS CHART.

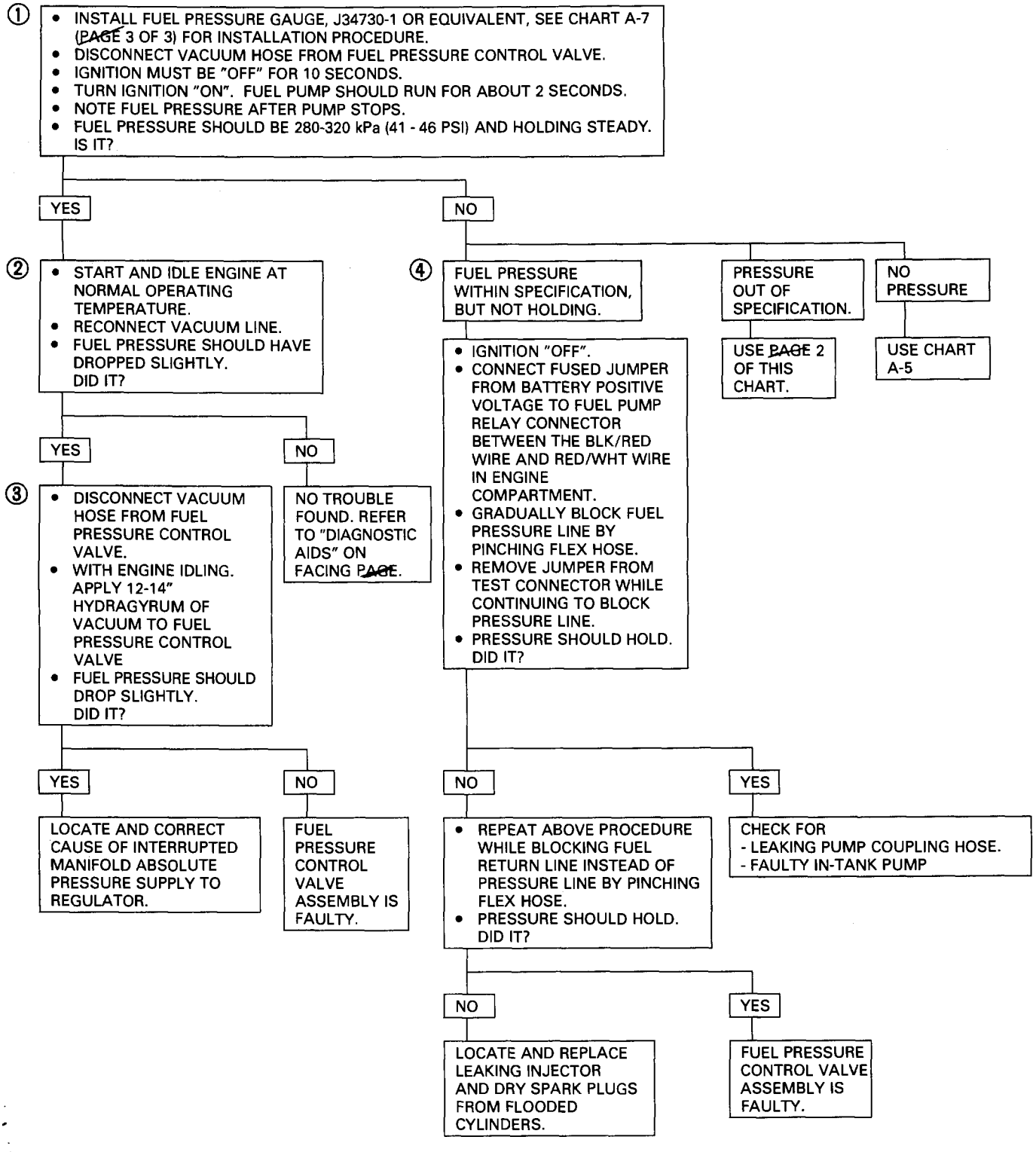

CHART A-7

(Page 2 of 3)
FUEL SYSTEM PRESSURE TEST

Circuit Description:

The fuel pump delivers fuel to the fuel rail and injectors, where the system pressure is controlled from 280 to 320 kPa (41 to 46 psi) by the fuel pressure control valve. Excess fuel is returned to the fuel tank. When the engine is stopped, the pump can be energized by jumping the fuel pump relay connector with a fused jumper.

Test Description:

Numbers below refer to circled numbers on the diagnostic chart.

⑤ Pressure less than 280 kPa (41 psi) may be caused by one of two problems.

- The regulated fuel pressure is too low. The system will be running lean and may set diagnostic trouble code 44. Also, hard cold starting and overall poor performance is possible.
- Restricted flow is causing a pressure drop. Normally, a vehicle with a fuel pressure loss at idle will not be driveable. However, if the pressure drop occurs only while driving, the engine will surge and then stop as pressure begins to drop rapidly.

⑥ Restricting the fuel return line allows the fuel pump to build above regulated pressure. When battery positive voltage is applied to the fuel pump relay, pressure should be above 450 kPa (65 psi).

⑦ This test determines if the high fuel pressure is due to a restricted fuel return line or a fuel pressure control valve problem.

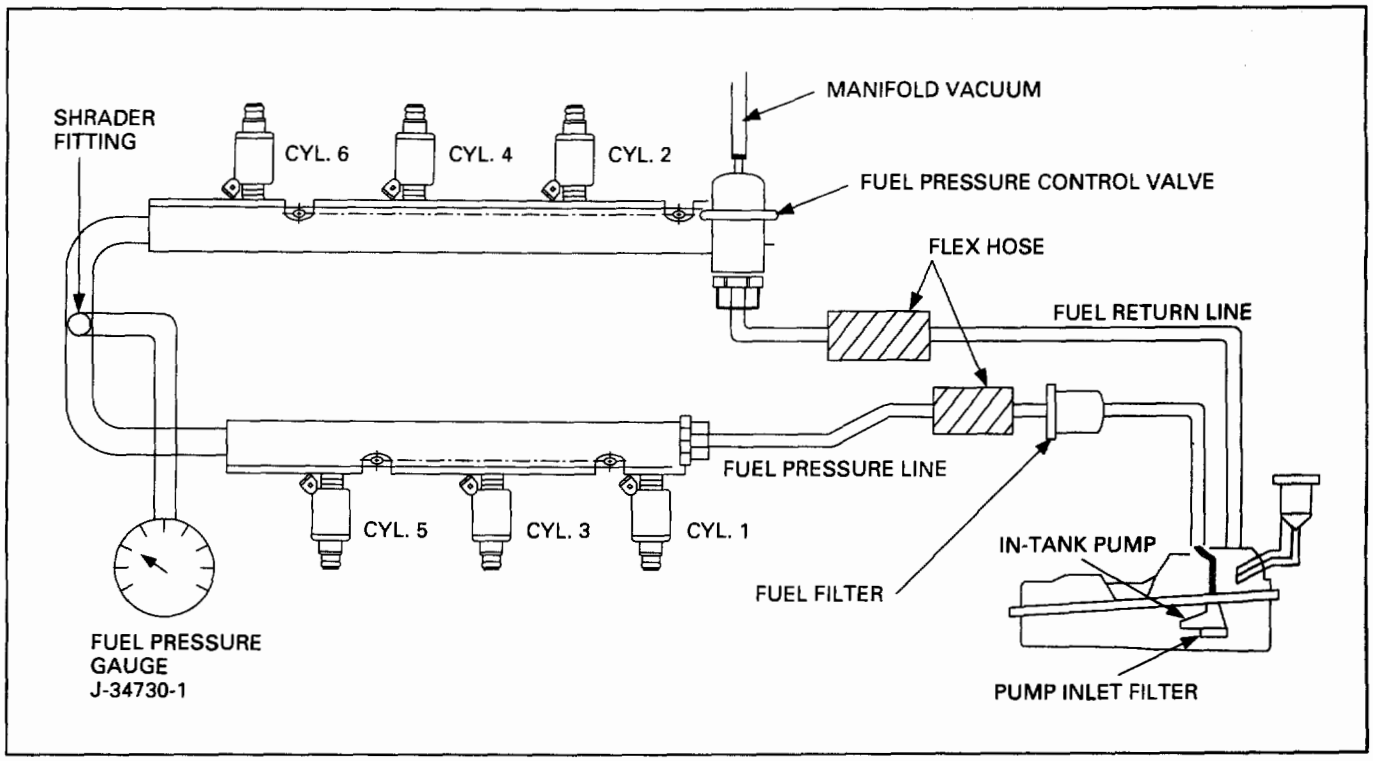

Fig. 6E2-31

CHART A-7

(Page 2 of 3)
FUEL SYSTEM PRESSURE TEST

NOTE: FUEL SYSTEM IS UNDER PRESSURE. TO AVOID FUEL SPILLAGE, REFER TO FIELD SERVICE PROCEDURES FOR TESTING OR REPAIRS REQUIRING DISASSEMBLY OF FUEL LINES OR FITTINGS. REFER TO PAGE 3 OF 3 OF THIS CHART.

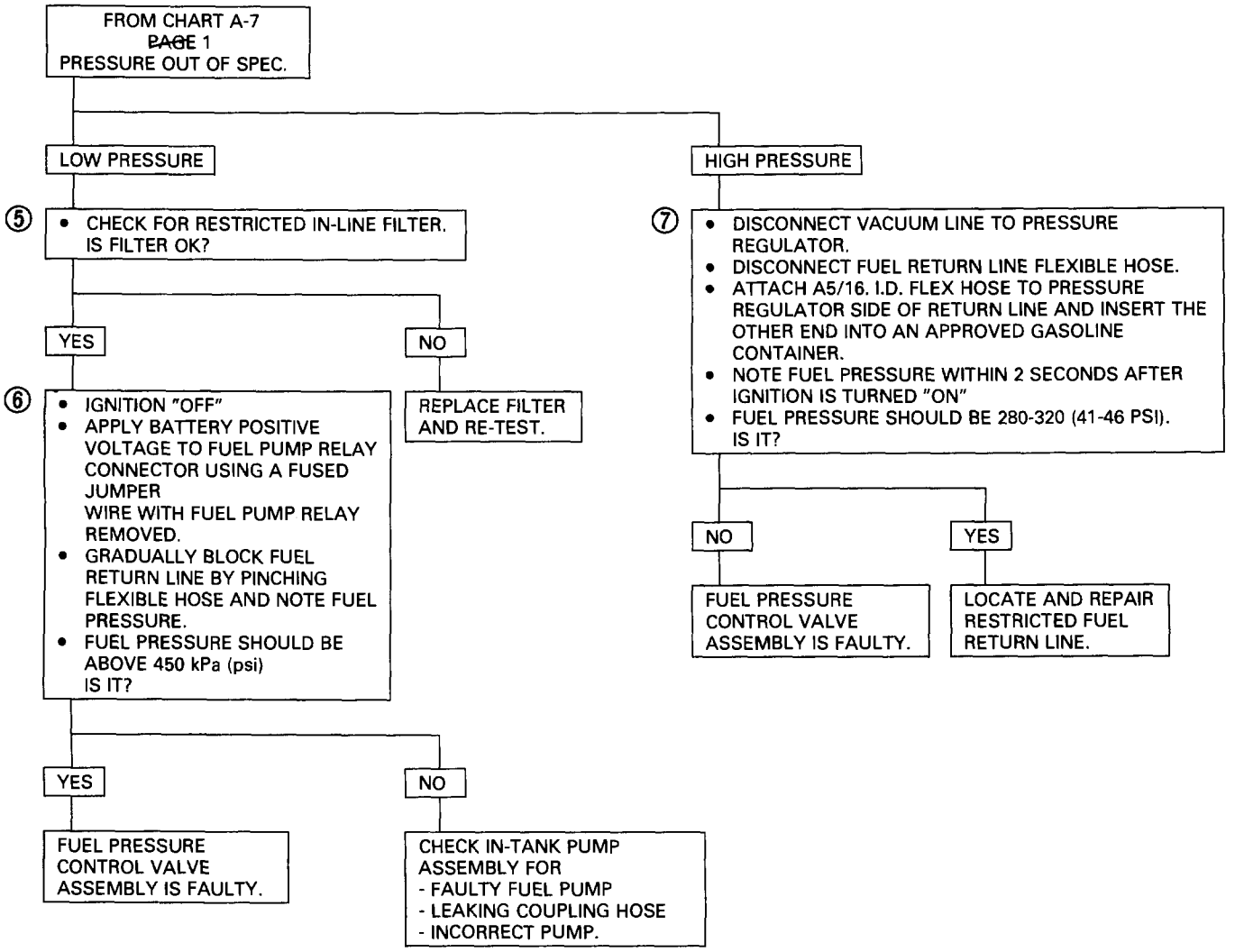

CHART A-7

(Page 3 of 3)
FUEL SYSTEM PRESSURE TEST

Circuit description

The fuel rail is equipped with a schrader fitting. Install fuel pressure gauge J-34730-1.

NOTE: On vehicles with DOHC Engine, it is necessary to remove the common chamber from the Intake Manifold to gain access to the Shrader Fitting on the fuel rail. Refer to Section "6E2-C2" "Fuel Metering System", for common chamber removal procedure.

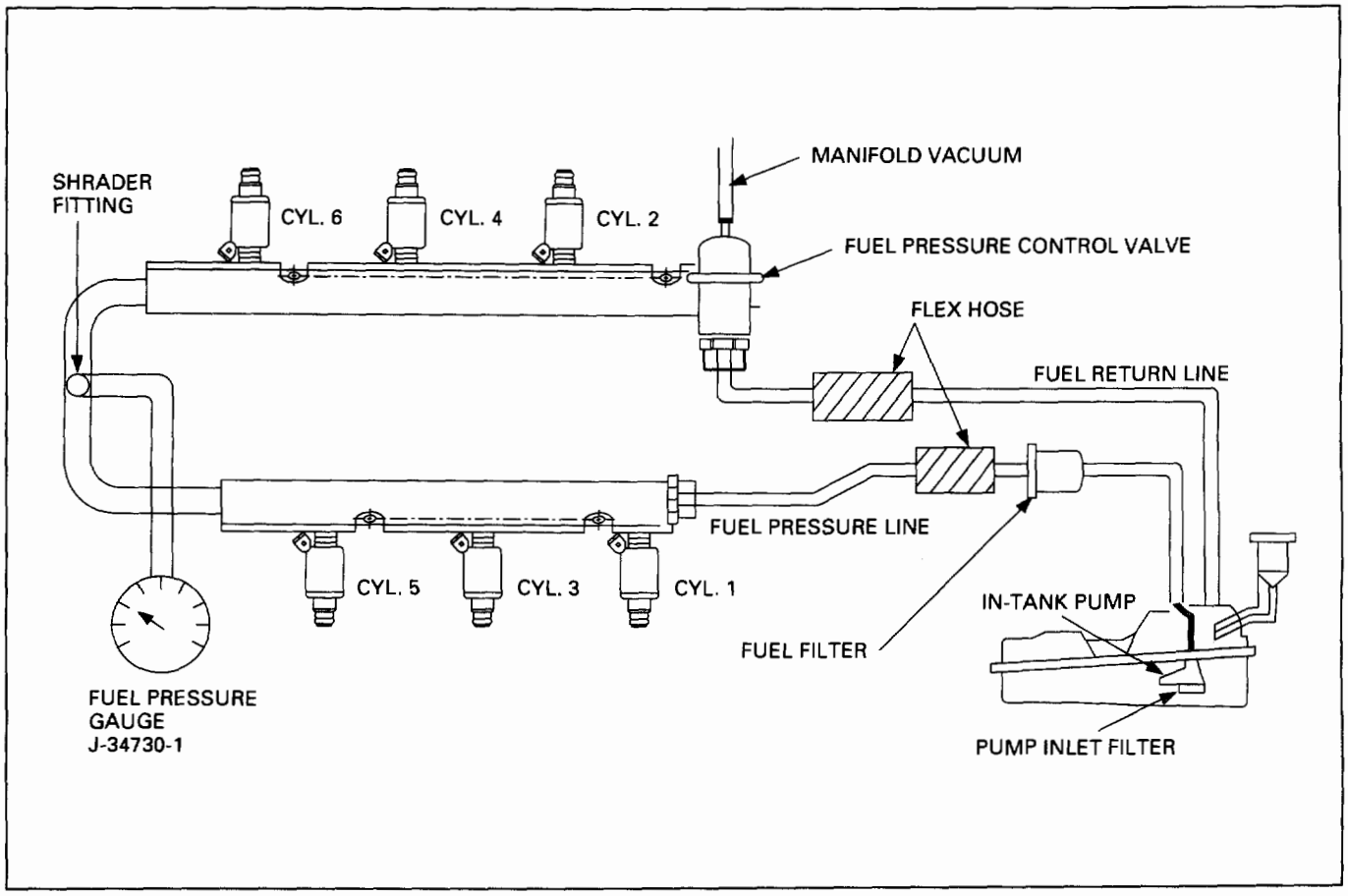

Fig. 6E2-32

CHART A-7

(Page 3 of 3)
FUEL SYSTEM PRESSURE TEST

Tools Required: J34730-1 FUEL PRESSURE GAUGE

CAUTION: TO REDUCE THE RISK OF FIRE AND PERSONAL INJURY:

- IT IS NECESSARY TO RELIEVE FUEL SYSTEM PRESSURE BEFORE CONNECTING A FUEL PRESSURE GAUGE.
- A SMALL AMOUNT OF FUEL MAY BE RELEASED WHEN DISCONNECTING THE FUEL LINES. COVER FUEL LINE FITTINGS WITH A SHOP TOWEL BEFORE DISCONNECTING, TO CATCH ANY FUEL THAT MAY LEAK OUT. PLACE TOWEL IN APPROVED CONTAINER WHEN DISCONNECT IS COMPLETED.

FUEL PRESSURE RELIEF PROCEDURE

1. REMOVE FUEL CAP.
2. REMOVE FUEL PUMP RELAY FROM UNDERHOOD RELAY CENTER.
3. START ENGINE AND ALLOW TO STALL.
4. CRANK ENGINE FOR ADDITIONAL 30 SECONDS.
5. REMOVE NEGATIVE BATTERY CABLE.

FUEL GAUGE ADAPTER INSTALLATION

1. REMOVE SHOULDER FITTING CAP.
2. INSTALL FUEL GAUGE J34730-1 TO FUEL RAIL
3. REINSTALL FUEL PUMP RELAY.
4. CONNECT NEGATIVE BATTERY CABLE.
5. IF YOU ARE WORKING ON A DOHC, IT WILL BE NECESSARY TO INSTALL THE INTAKE MANIFOLD RUN PLATE. REFER TO SECTION C2 FUEL METERING SYSTEM FOR INTAKE REMOVAL.
   REFER TO INTAKE MANIFOLD DIAGNOSTIC PLATE FOR INSTALLATION INSTRUCTIONS, AS WILL AS CHART A-8 OF THIS SECTION.

CHART A-8

INTAKE MANIFOLD DIAGNOSTIC PLATE

Circuit Description:

Due to the inaccessability of the fuel rail, fuel injectors, fuel rail pressure test fitting and the knock sensor as well as the engine coolant sensor, it will be necessary to install the Intake Manifold Diagnostic Plate to be able to run the engine with the plenum assembly removed.

Diagnostic Aids:

- The ground stud is provided for the engine control module ground so as to not create any additional driveability problems while testing.
- Bolt hole "D" is to mount the electronic ignition assembly to the manifold plate.
- It is important to clear any malfunction diagnostic trouble codes after the manifold plate is removed. Retest the vehicle to insure no malfunction diagnostic trouble codes reset.
- The exhaust gas recirculation block plate is used to cover the opening in the exhaust manifold where the exhaust gas recirculation exhaust tube originally was connected.

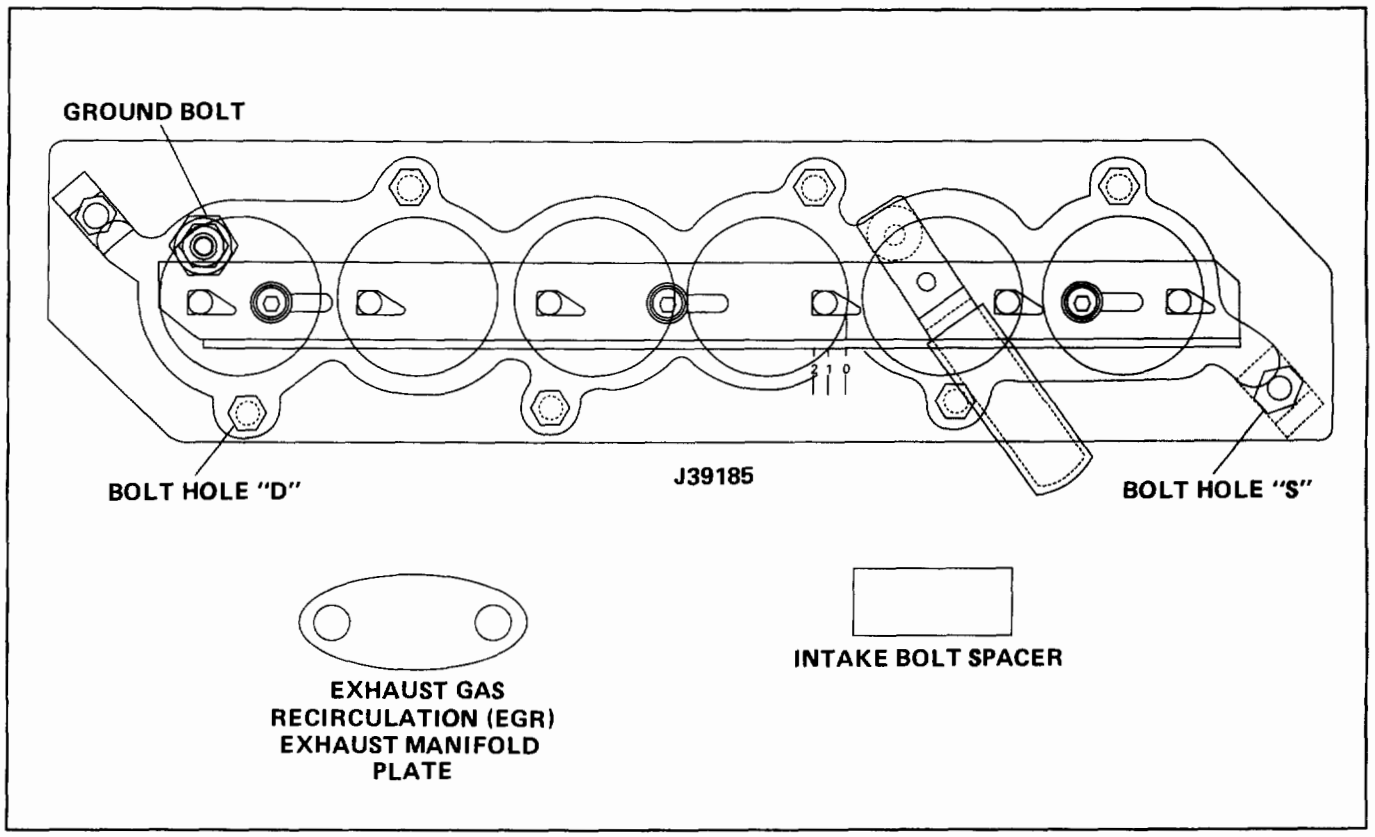

Fig. 6E2-33

CHART A-8

INTAKE MANIFOLD DIAGNOSTIC PLATE (INSTALLATION PROCEDURE)

NOTE: THE INTAKE MANIFOLD DIAGNOSTIC PLATE IS USED TO ALLOW THE ENGINE TO BE RUN WITH THE COMMON CHAMBER ASSEMBLY REMOVED. IT IS NOT INTENDED TO ALLOW A TECHNICIAN TO DRIVE THE VEHICLE WITH THE INTAKE MANIFOLD PLATE INSTALLED.

INSTALLATION:

1. RELIEVE FUEL PRESSURE. REFER TO PAGE 3 OF 3 OF CHART A-7 OF THIS SECTION.
2. DISCONNECT NEGATIVE BATTERY CABLE.
3. REMOVE INTAKE PLENUM ASSEMBLY PER PROCEDURE IN SECTION C-2 FUEL METERING SYSTEMS.
4. INSTALL MANIFOLD DIAGNOSTIC PLATE WITH GROUND BOLT TO THE REAR OF THE ENGINE. INSTALL GROUND WIRES TO BOLT.
5. USE THE SIX (6) BOLTS TO SECURE THE MANIFOLD PLATE TO THE INTAKE ASSEMBLY.
6. USE BOLT HOLE "D" TO SECURE THE ELECTRONIC IGNITION UNIT TO THE MANIFOLD PLATE.
7. INSTALL THE EXHAUST GAS RECIRCULATION BLOCK PLATE AT EXHAUST MANIFOLD.
8. TORQUE ALL FASTENERS TO 8-12 LB.FT. (11-16 N·m) SEE CAUTION.

CAUTION: OVER-TORQUING THE INTAKE MANIFOLD PLATE MAY DAMAGE THE INTAKE MANIFOLD PLATE'S SEALING SURFACE WHICH WILL RESULT IN AN "AIR LEAK" AT THE PLATE BASE GASKET. THIS COULD RESULT IN A MISDIAGNOSIS OF A DRIVEABILITY PROBLEM.

STARTING THE VEHICLE WITH DIAGNOSTIC PLATE INSTALLED:

1. SET THE PLATE SLIDER TO POSITION "0".
2. USING A HAND HELD VACUUM PUMP APPLY 12-15 INCHES (34-52 kPa) OF VACUUM TO THE MANIFOLD ABSOLUTE PRESSURE SENSOR AND THE FUEL PRESSURE CONTROL VALVE.
3. CRANK ENGINE AND ALLOW REVOLUTION PER MINUTE TO STABILIZE. RUN FOR 2-5 MINUTES.
4. MOVE SLIDER BAR TO POSITION "1" WHICH WILL ALLOW THE ENGINE TO IDLE AT 1000 TO 1200 REVOLUTION PER MINUTE. THIS ALLOWS ANY NEEDED DIAGNOSTIC TEST TO BE PERFORMED.
5. POSITION TWO (2) WILL CAUSE THE ENGINE TO STALL. THIS IS TO ALLOWS THE TECHNICIAN TO "STALL" THE ENGINE FROM OUTSIDE OF THE VEHICLE.

INTAKE MANIFOLD DIAGNOSTIC PLATE REMOVAL:

1. REVERSE THE ABOVE PROCEDURES USED IN THE INSTALLATION PROCEDURE.
2. BE SURE TO CLEAR ALL CODES AND CONFIRM VEHICLE IS OPERATING NORMALLY.

DIAGNOSTIC TROUBLE CODE (DTC) 13

HEATED OXYGEN SENSOR (HO2S) CIRCUIT (OPEN/GROUNDED CIRCUIT)

Circuit Description:

The engine control module supplies a voltage of about .45 volt between terminals "B3" and "B2". (If measured with a 10 megohm digital voltmeter, this may read as low as .32 volt).
When the Heated Oxygen Sensor (HO2S) reaches operating temperature, it varies this voltage from about .1 volt (exhaust is lean) to about .9 volt (exhaust is rich). The HO2S has a heater incorporated as part of the sensor. This heater is used to heat the sensor up, thus causing the HO2S to produce voltage sooner. The heater portion of the sensor will not affect Diagnostic Trouble Code (DTC) 13 setting.
The sensor is like an open circuit and produces no voltage, when it is below 300°C (572°F). An open sensor circuit, or could sensor, cause "Open Loop" operation.

Test Description:

Numbers below refer to circled numbers on the diagnostic chart.

① DTC 13 will set under if:
- Engine operating temperature above 69.5°C (157.1°F).
- At least 3 minutes have elapsed since engine start-up.
- Oxygen signal voltage is steady between .347 and .547 volt.
- Throttle angle above 9.8%.
- No DTC 21 or 31 is set.
- All above conditions are met for about 40 seconds.
  If the conditions for a DTC 13 exist, the system will not go "Closed Loop."

② This test determines if the HO2S is the problem or if the engine control module and wiring are at fault.

③ Use only a 10 megohm digital meter when performing this test. This test checks the continuity of "B3" and "B2". If "B2" is open, the engine control module voltage on "B3" will be over .6 volt (600 mV).

Diagnostic Aids:

Normal "Scan tool" HO2S voltage varies between 100mv to 999 mv (.1 and 1.0 volt), while in "Closed Loop". DTC 13 sets in 40 seconds, if sensor signal voltage remains between 0.347 and 0.547 volt, but the system will go "Open Loop" in about 15 seconds.
Verify a clean, tight ground connection for "B2" at the engine mounting point. Open "B3" or "B2" will result in a DTC 13. If DTC 13 is intermittent, refer to "Symptoms", Section "6E2-B".

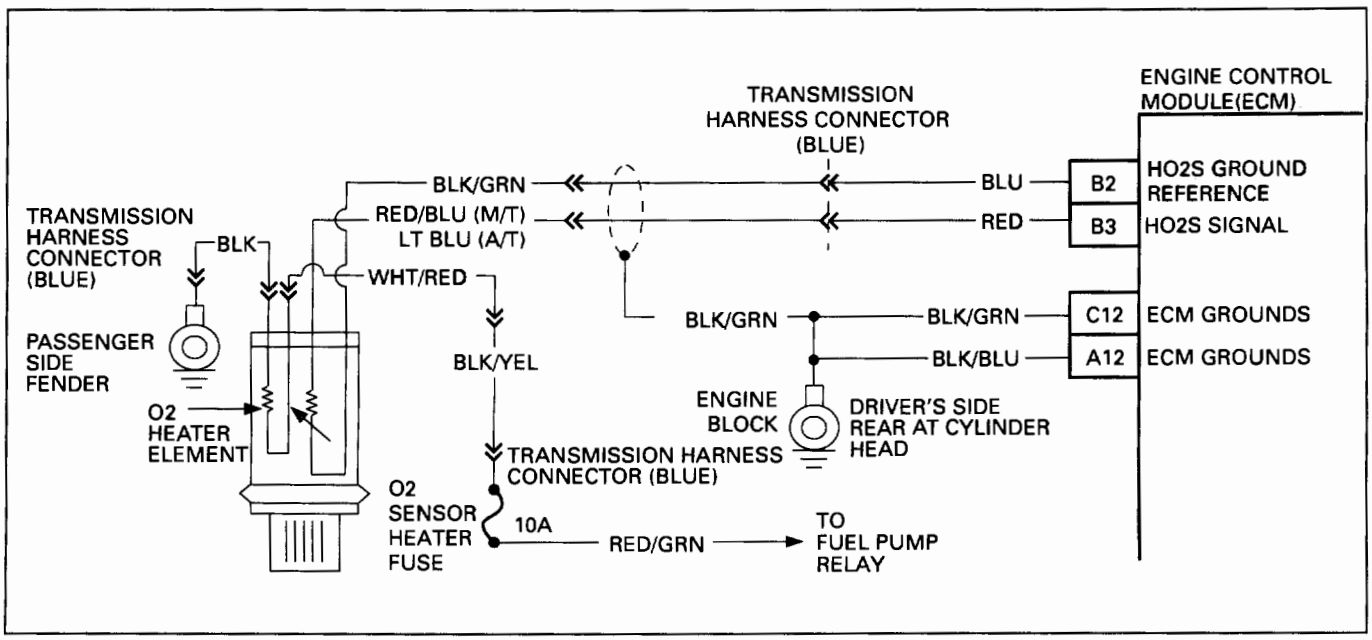

Fig. 6E2-34

DIAGNOSTIC TROUBLE CODE (DTC) 13

HEATED OXYGEN SENSOR (HO2S) CIRCUIT (OPEN/GROUNDED CIRCUIT)

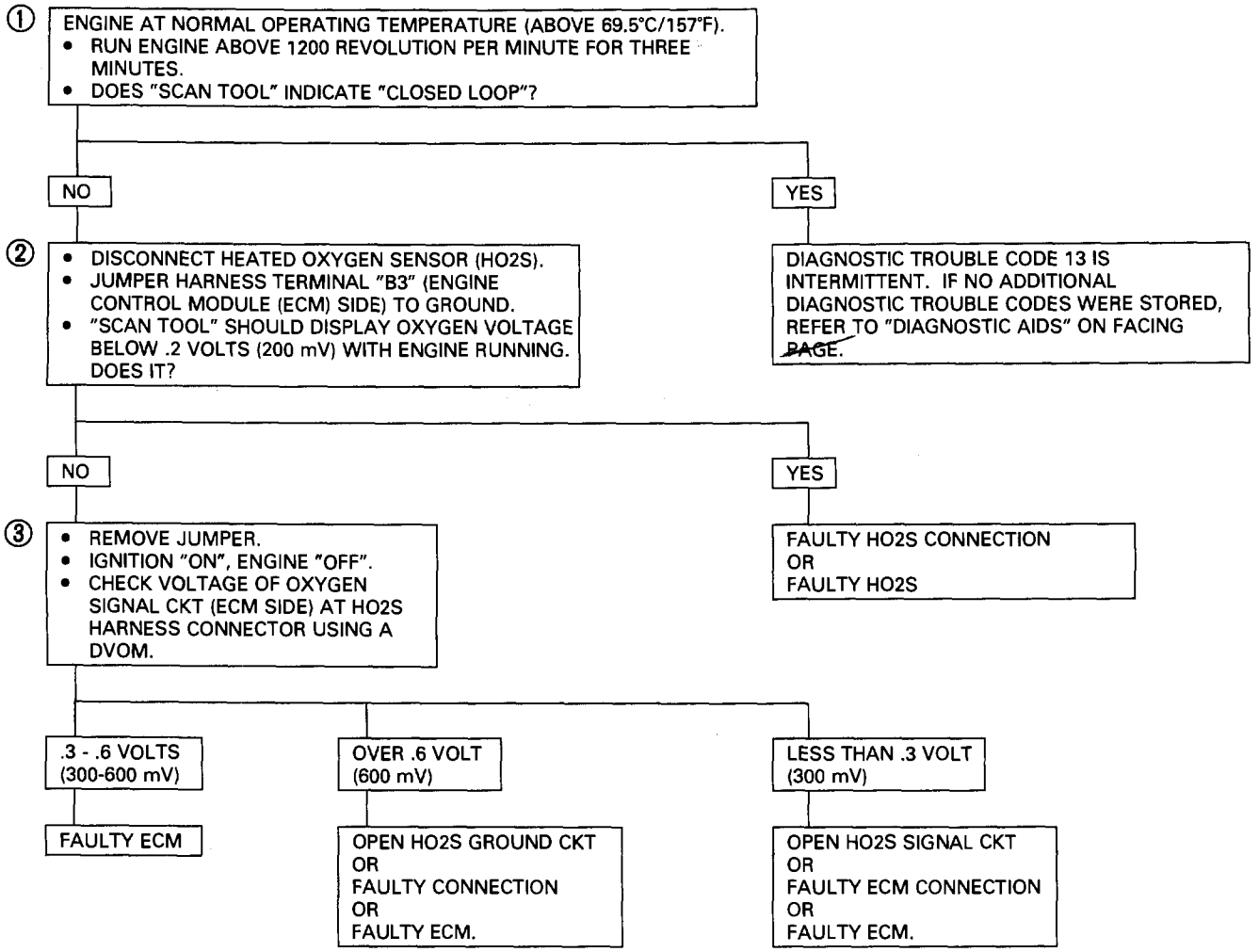

CLEAR DIAGNOSTIC TROUBLE CODES AND CONFIRM "CLOSED LOOP" OPERATION AND NORMAL "CHECK ENGINE" MALFUNCTION INDICATOR LAMP OPERATION.

DIAGNOSTIC TROUBLE CODE (DTC) 14A

ENGINE COOLANT TEMPERATURE (ECT) SENSOR CIRCUIT (HIGH TEMPERATURE INDICATED)

Circuit Description:

The Engine Coolant Temperature Sensor uses a thermistor to control the signal voltage to the Engine Control Module (ECM). The ECM applies a reference voltage on GRY/ BLK wire to the sensor. When the engine is cold, the sensor (thermistor) resistance is high. The ECM will then sense a high signal voltage.

As the engine warms, the sensor resistance decreases, and the voltage drops. At normal engine operating temperature, the voltage will measure about 1.5 to 2.0 volts at the ECM terminal "D12."
Engine coolant temperature is one of the inputs used to control the following:

- Fuel delivery
- Ignition control
- Idle Air Control

Test Description:

Numbers below refer to circled numbers on the diagnostic chart.

① Checks to see if Diagnostic Trouble Code (DTC) was set as result of hard failure or intermittent condition. DTC 14A will set if:
   - The engine has been running for at least 3 minutes.
   - Signal Voltage indicates a engine coolant temperature above 150°C (302°F).

② This test simulates conditions for DTC 14B. If the ECM recognizes the open circuit (high voltage), and displays a low temperature, the ECM and wiring are OK.

Diagnostic Aids:

A "Scan tool" reads engine temperature in degrees Celsius.
After the engine is started, the temperature should rise steadily to about 90°C, then stabilize, when the thermostat opens.
If the engine has been allowed to cool to an ambient temperature (overnight), engine coolant temperature and Intake Air Temperature (IAT) may be checked with a "Scan tool" and should read close to each other.
When a DTC 14A is set, the ECM will turn "ON" the engine cooling fan.
A DTC 14A will result if GRY/BLK wire is shorted to ground.
If DTC 14A is intermittent, refer to Section "B".

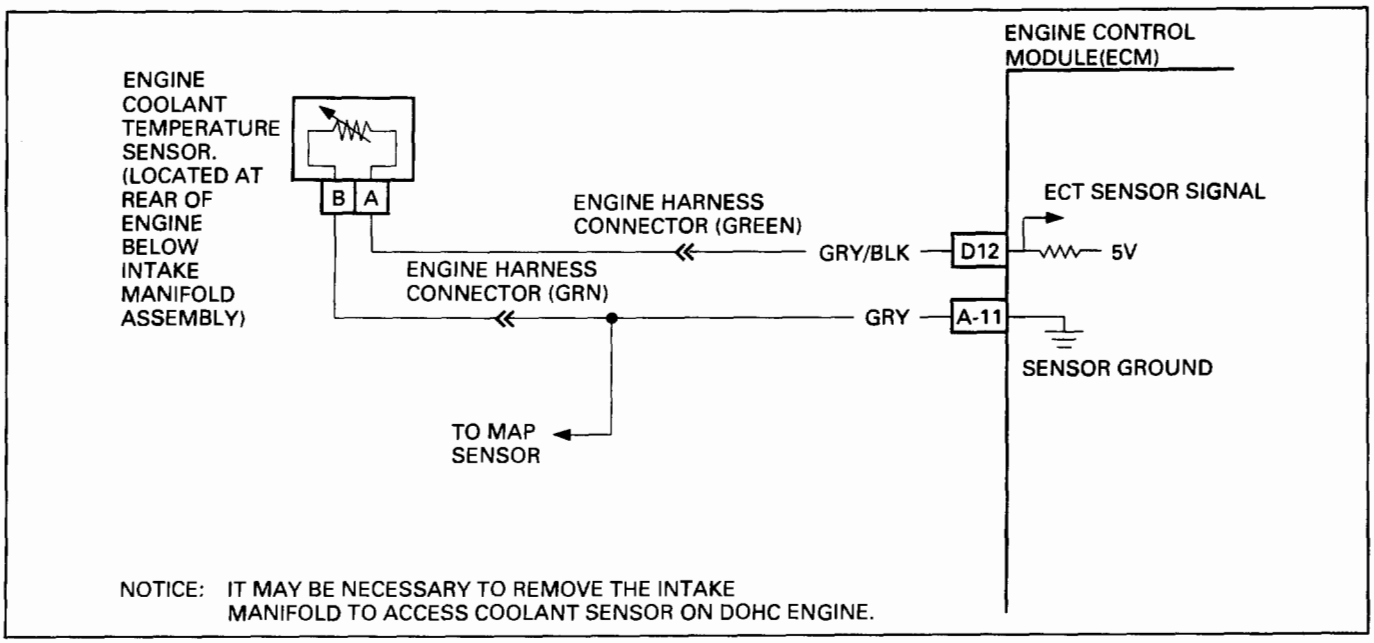

Fig. 6E2-35

DIAGNOSTIC TROUBLE CODE (DTC) 14A

ENGINE COOLANT TEMPERATURE (ECT) SENSOR CIRCUIT (HIGH TEMPERATURE INDICATED)

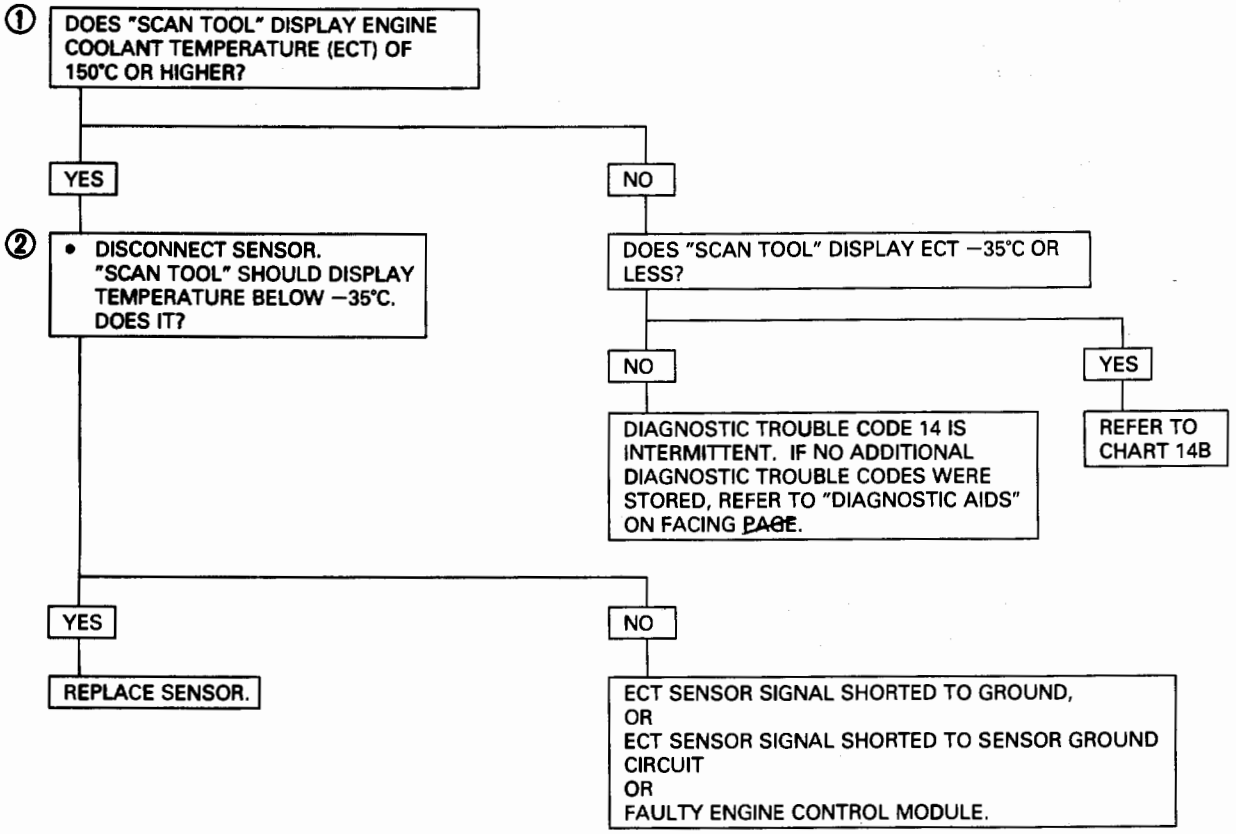

CLEAR DIAGNOSTIC TROUBLE CODES AND CONFIRM "CLOSED LOOP" OPERATION AND NORMAL "CHECK ENGINE" MALFUNCTION INDICATOR LAMP OPERATION.

DIAGNOSTIC TROUBLE CODE (DTC) 14B

ENGINE COOLANT TEMPERATURE (ECT) SENSOR CIRCUIT (LOW TEMPERATURE INDICATED)

Circuit Description:

The Engine Coolant Temperature Sensor uses a thermistor to control the signal voltage to the Engine Control Module (ECM). The ECM applies a reference voltage on GRY/ BLK wire to the sensor. When the engine is cold, the sensor (thermistor) resistance is high. The ECM will then sense a high Engine Coolant Temperature (ECT) sensor signal voltage.

As the engine warms, the sensor resistance becomes less, and the ECT sensor signal voltage drops. At normal engine operating temperature, the voltage will measure about 1.5 to 2.0 volts at the ECM terminal "D12."
ECT is one of the inputs used to control:

- Fuel delivery
- Ignition control
- Idle Air Control

Test Description:

Numbers below refer to circled numbers on the diagnostic chart.

① Checks to see if Diagnostic Trouble Code (DTC) was set as result of hard failure or intermittent condition. DTC 14B will set if:
   - The engine has been running at least for 3 minutes.
   - ECT sensor signal voltage indicates a ECT above −35°C (−31°F) for 30 seconds.

② This test simulates conditions for DTC 14A. If the ECM recognizes the grounded circuit (low voltage), and displays a high temperature, the ECM and wiring are OK.

③ This test will determine if there is a wiring problem or a faulty ECM.

Diagnostic Aids:

A "Scan tool" reads engine temperature in degrees Celsius.
After the engine is started, the temperature should rise steadily to about 90°C, then stabilize, when the thermostat opens.
If the engine has been allowed to cool to an ambient temperature (overnight), engine coolant and intake air temperature may be checked with a "Scan tool" and should read close to each other.
A DTC 14B will result if GRY/BLK wire GRY are open.
If DTC 14B is intermittent, refer to Section "B".

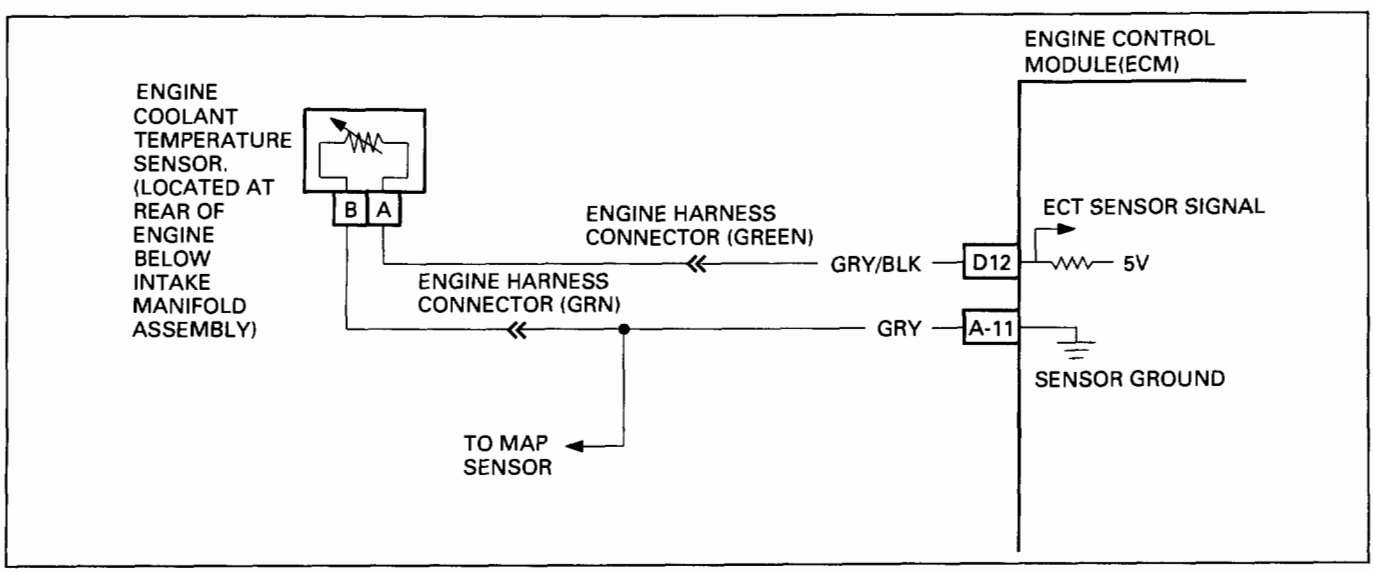

Fig. 6E2-36

DIAGNOSTIC TROUBLE CODE (DTC) 14B

ENGINE COOLANT TEMPERATURE (ECT) SENSOR CIRCUIT (LOW TEMPERATURE INDICATED)

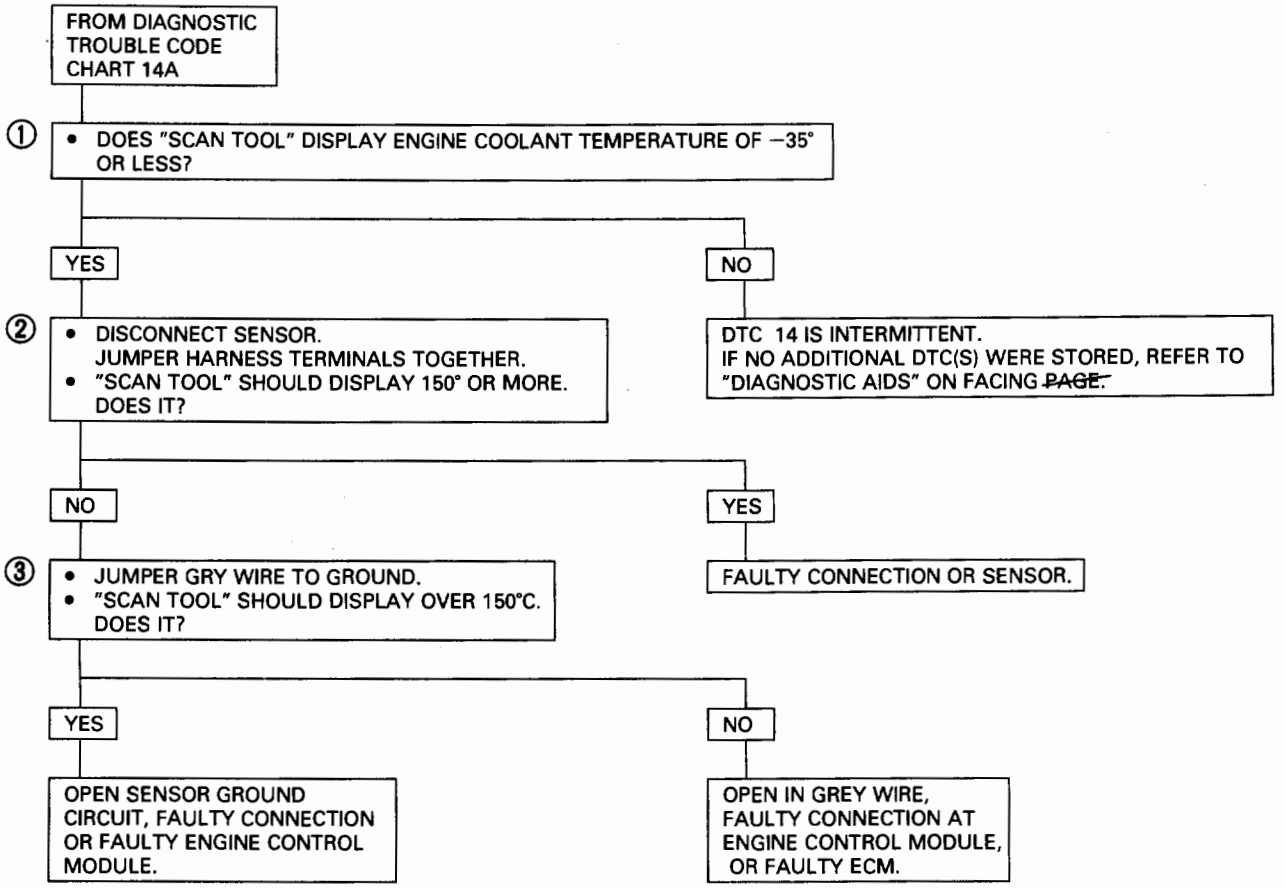

CLEAR DTC(S) AND CONFIRM "CLOSED LOOP" OPERATION AND NORMAL "CHECK ENGINE" MALFUNCTION INDICATOR LAMP OPERATION.

DIAGNOSTIC TROUBLE CODE (DTC) 21A

THROTTLE POSITION (TP) SENSOR CIRCUIT (SIGNAL VOLTAGE HIGH)

Circuit Description:

The Throttle Position (TP) Sensor provides a voltage signal that changes relative to the throttle body position. Signal voltage will vary from less than 1.25 volts at idle to about 5 volts at wide open throttle.
The TP sensor signal is one of the most important inputs used by the Engine Control Module (ECM) for fuel control and for many of the ECM controlled outputs.

Test Description:

Numbers below refer to circled numbers on the diagnostic chart.

① This checks to see if Diagnostic Trouble Code (DTC) 21A is the result of a hard failure or an intermittent condition.
A DTC 21A will set if.
- TP sensor reading above 4.6 volts.
- Engine speed less than 1200 revolution per minute.
- Manifold absolute pressure reading below 50 kPa.
- All of the above conditions are present for 2.3 seconds.

② This step simulates conditions for a DTC 21B. If the ECM recognizes the change of state, the ECM and BLU/ORG and BLU/RED are OK.

③ This step isolates a faulty sensor, ECM, or an open BLK/WHT wire. If the BLK/WHT is open, there may also be a DTC 23A.

Diagnostic Aids:

A "Scan tool" displays throttle position in volts. Closed throttle voltage should be less than 1.25 volts. TP sensor voltage should increase at a steady rate as throttle is moved to wide open throttle.

A DTC 21A will result in BLK/WHT wire is open or BLU/RED is shorted to voltage. If DTC 21A is intermittent, refer to Section "B".

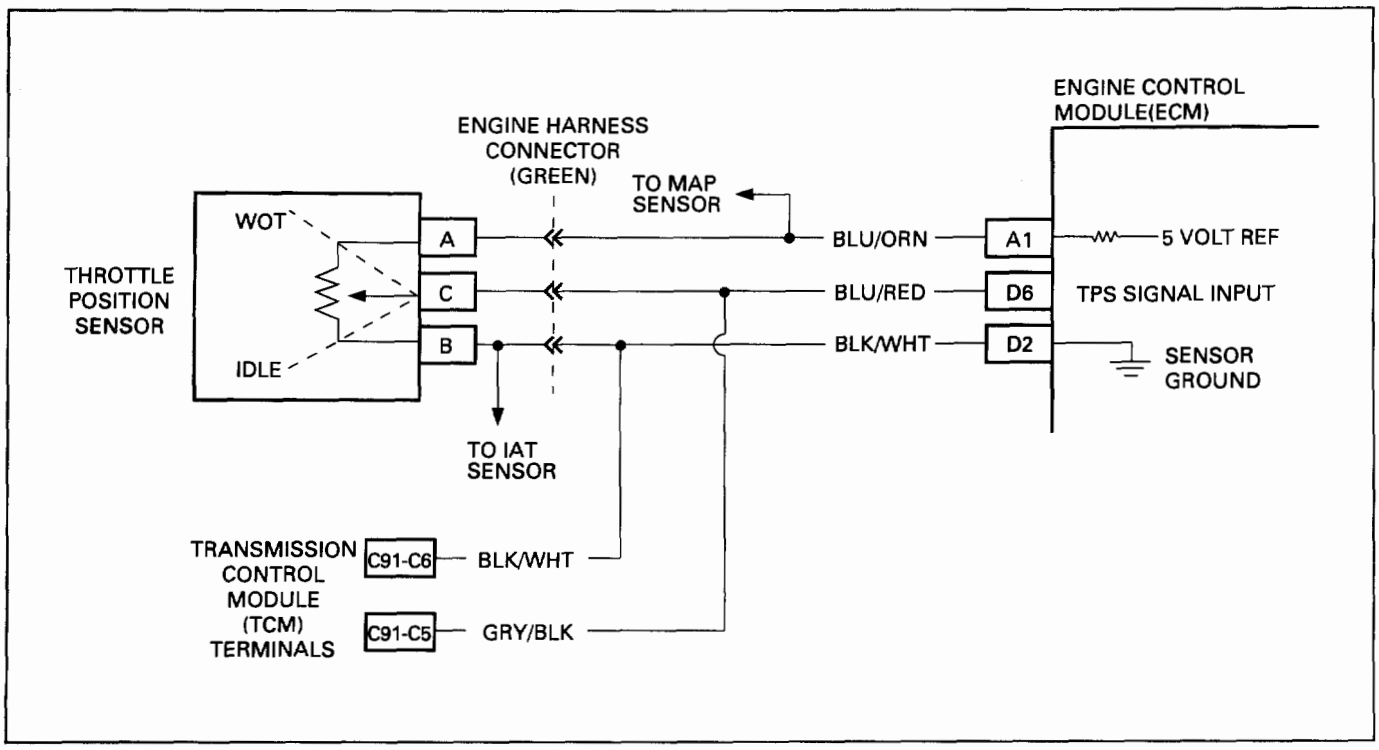

Fig. 6E2-37

DIAGNOSTIC TROUBLE CODE (DTC) 21A

THROTTLE POSITION (TP) SENSOR CIRCUIT (SIGNAL VOLTAGE HIGH)

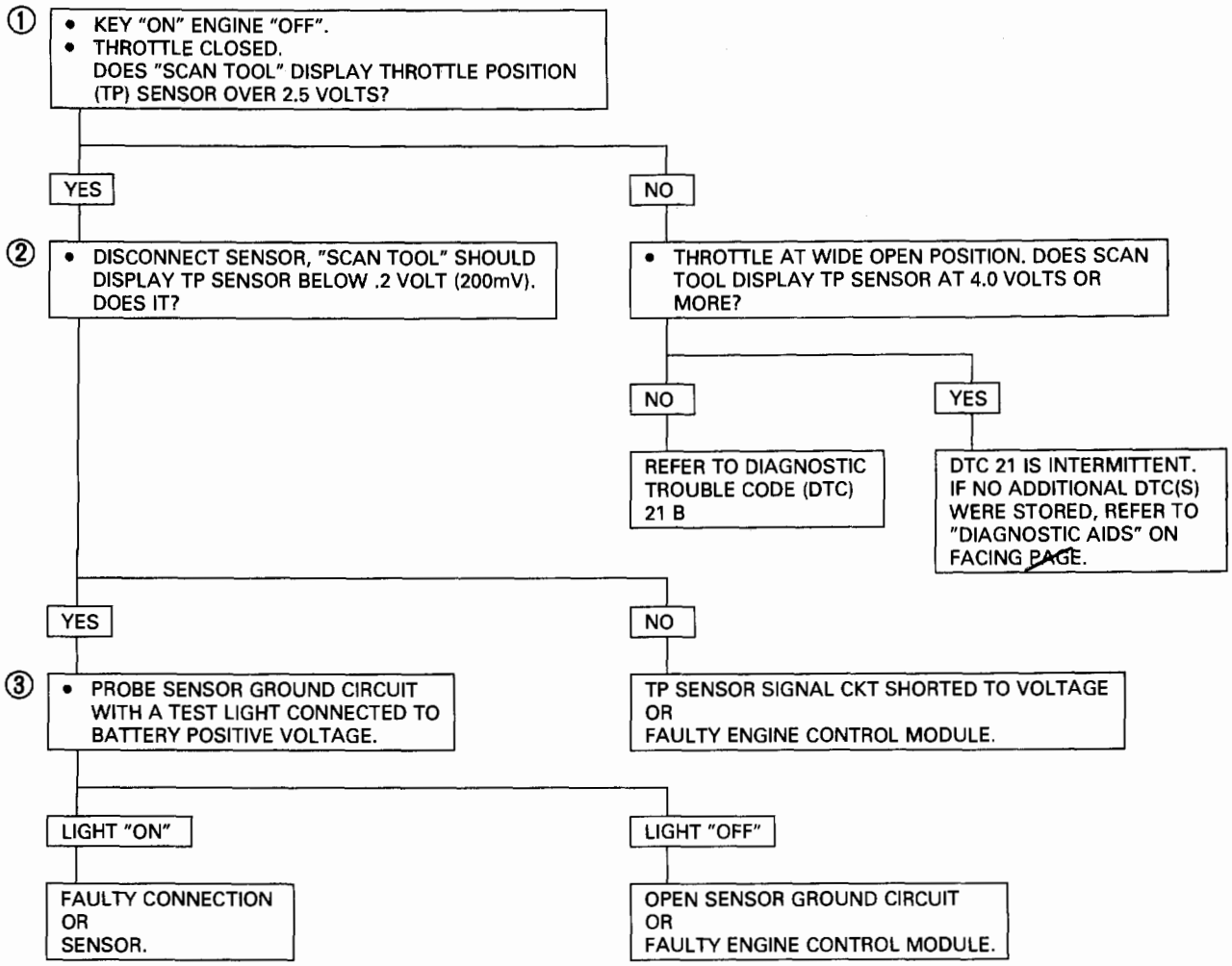

CLEAR DTC(S) AND CONFIRM "CLOSED LOOP" OPERATION AND NORMAL "CHECK ENGINE" MALFUNCTION INDICATOR LAMP OPERATION.

DIAGNOSTIC TROUBLE CODE (DTC) 21B

THROTTLE POSITION (TP) SENSOR CIRCUIT (SIGNAL VOLTAGE LOW)

Circuit Description:

The Throttle Position (TP) Sensor provides a voltage signal that changes relative to the throttle body position. Signal voltage will vary from less than 1.0 volts at idle to about 5 volts at wide open throttle.
The TP sensor signal is one of the most important inputs used by the Engine Control Module (ECM) for fuel control and for many of the ECM controlled outputs.

Test Description:

Numbers below refer to circled numbers on the diagnostic chart.

① This checks to see if Diagnostic Trouble Code (DTC) 21B is the result of a hard failure or an intermittent condition.
A DTC 21B will set if:
- The engine is running
- TP sensor voltage is below .20 volts (200mV).

② This step simulates conditions for a DTC 21A. If a DTC 21A is set, or the "Scan tool" displays over 4 volts, the ECM and wiring are OK.

③ The "Scan tool" may not display 12 volts. The important thing is that the ECM recognizes the voltage as over 4 volts, indicating that BLU/RED wire and the ECM are OK.

④ If the 5 volt reference wire is open or shorted to ground, there may also be a stored DTC 33B.

Diagnostic Aids:

A "Scan tool" displays throttle position in volts. Closed throttle voltage should be less than 1.0 volts. TP sensor voltage should increase at a steady rate as throttle is moved to wide open throttle.

An open or grounded BLU/ORG or BLU/RED wire will result in a DTC 21B. If DTC 21B is intermittent, refer to Section "B".

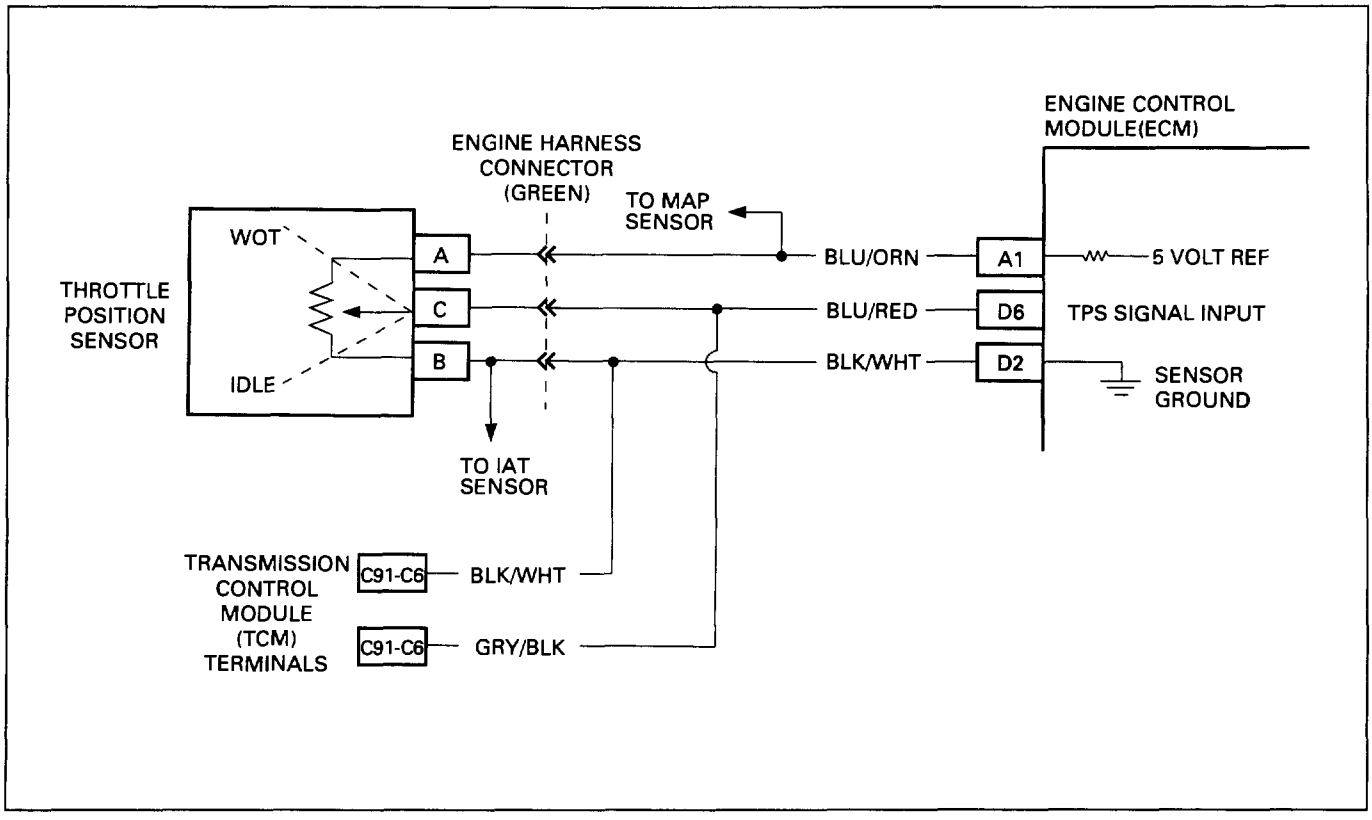

Fig. 6E2-38

DIAGNOSTIC TROUBLE CODE (DTC) 21B

THROTTLE POSITION (TP) SENSOR CIRCUIT (SIGNAL VOLTAGE LOW)

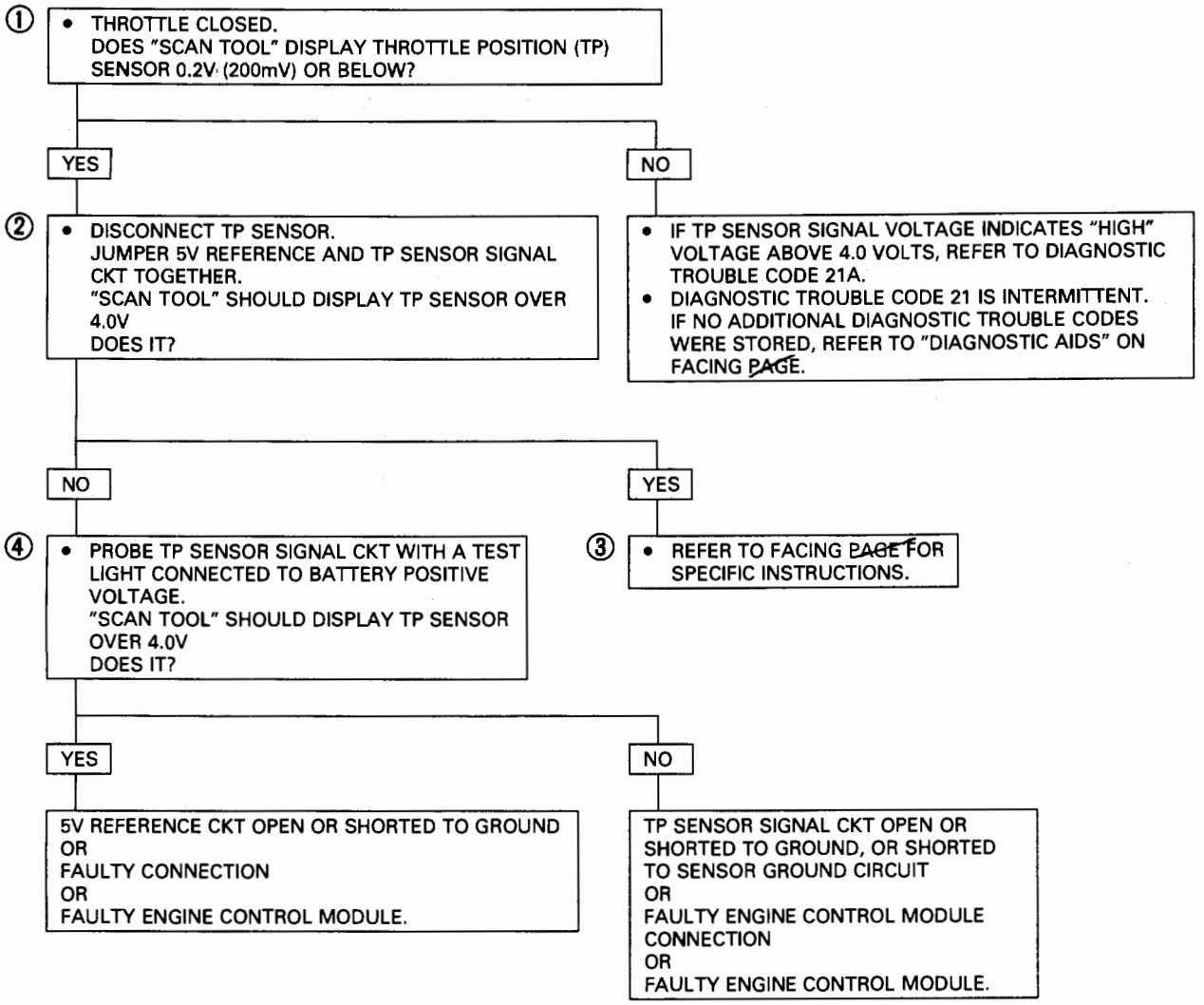

CLEAR DIAGNOSTIC TROUBLE CODES AND CONFIRM "CLOSED LOOP" OPERATION AND NORMAL "CHECK ENGINE" MALFUNCTION INDICATOR LAMP OPERATION.

DIAGNOSTIC TROUBLEL CODE (DTC) 23A

INTAKE AIR TEMPERATURE (IAT) SENSOR CIRCUIT (LOW TEMPERATURE INDICATED)

Circuit Description:

The Intake Air Temperature (IAT) Sensor uses a thermistor to control the signal voltage to the Engine Control Module (ECM). The ECM applies a voltage (4-6 volts) to BLU/BLK wire of the sensor. When manifold air is cold, the sensor (thermistor) resistance is high, therefore, the ECM will see a IAT signal. As the air warms, the sensor resistance becomes less and the IAT signal drops.

IAT LOW Test Description:

Numbers below refer to circled numbers on the diagnostic chart.

① This step checks to see if Diagnostic Trouble Code (DTC) 23A is the result of a hard failure or an intermittent condition.
A DTC 23A will set if:
- Signal voltage indicates a IAT temperature less than −30°C
- Engine has been running for longer than 3 minutes.

② This test simulates conditions for DTC 23B. If the "Scan tool" displays a high temperature, the ECM and wiring are OK.

③ This step checks continuity of BLU/BLK and BLK/WHT wires. If BLK/WHT wire is open there may also be a DTC 21A.

Diagnostic Aids:

If the engine has been allowed to cool to an ambient temperature (overnight), engine coolant and IAT may be checked with a "Scan tool" and should read nearly the same.

A DTC 23A will result if BLU/BLK or BLK/WHT wires become open.

If DTC 23A is intermittent, refer to Section "6E2-B".

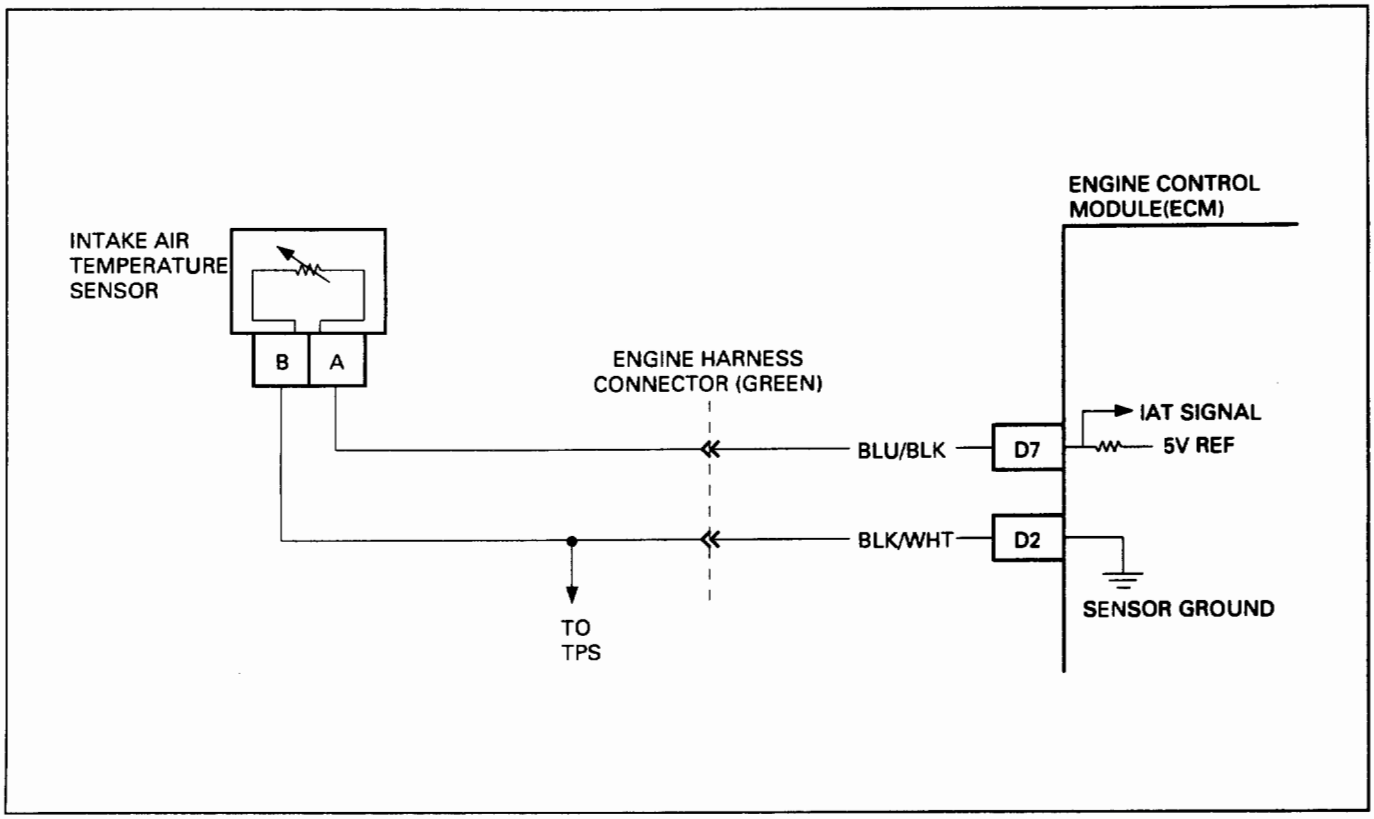

Fig. 6E2-39

DIAGNOSTIC TROUBLE CODE (DTC) 23A

INTAKE AIR TEMPERATURE (IAT) SENSOR CIRCUIT (LOW TEMPERATURE INDICATED)

Stored as 069a

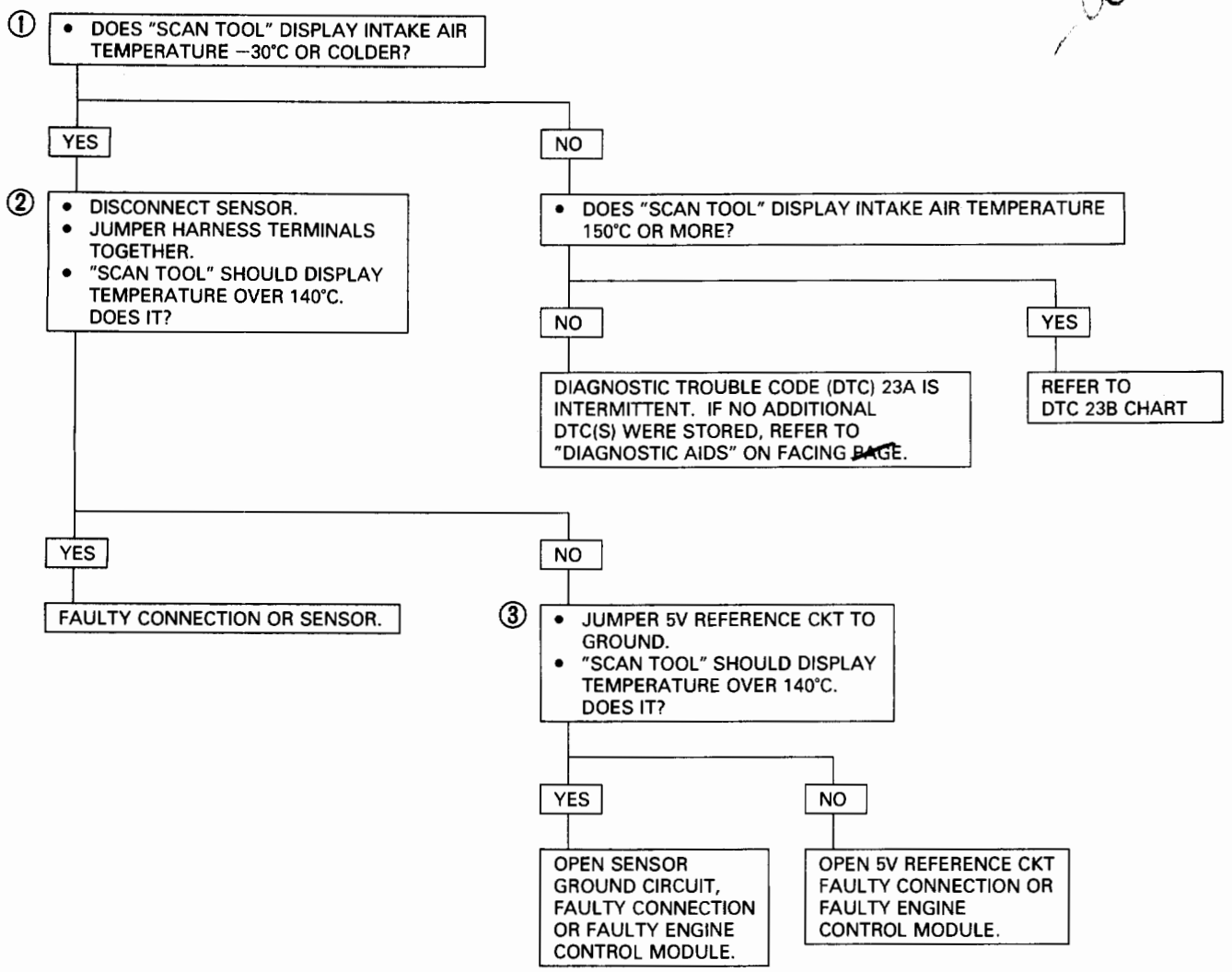

CLEAR DTC(S) AND CONFIRM "CLOSED LOOP" OPERATION AND NORMAL "CHECK ENGINE" MALFUNCTION INDICATOR LAMP OPERATION.

DIAGNOSTIC TROUBLE CODE (DTC) 23B

INTAKE AIR TEMPERATURE (IAT) SENSOR CIRCUIT (HIGH TEMPERATURE INDICATED)

Circuit Description:

The Intake Air Temperature (IAT) Sensor uses a thermistor to control the signal voltage to the Engine Control Module (ECM). The ECM applies a voltage (4-6 volts) to BLU/BLK wire of the sensor. When manifold air is cold, the sensor (thermistor) resistance is high, therefore, the ECM will see a IAT signal. As the air warms, the sensor resistance becomes less and the IAT signal drops.

IAT HIGH Test Description:

Numbers below refer to circled numbers on the diagnostic chart.

① This check determines if the Diagnostic Trouble Code (DTC) 23B is the result of a hard failure or an intermittent condition.
A DTC 23B will set if:
- Engine has been running for longer than 3 minutes.
- An IAT greater than 150°C is detected.

Diagnostic Aids:

If the engine has been allowed to cool to an ambient temperature (overnight), engine coolant and IAT may be checked with a "Scan tool" and should read nearly the same.

A DTC 23B will result if BLU/BLK or BLK/WHT wires become open, or shorted to ground.

If DTC 23B is intermittent, refer to Section "6E2-B".

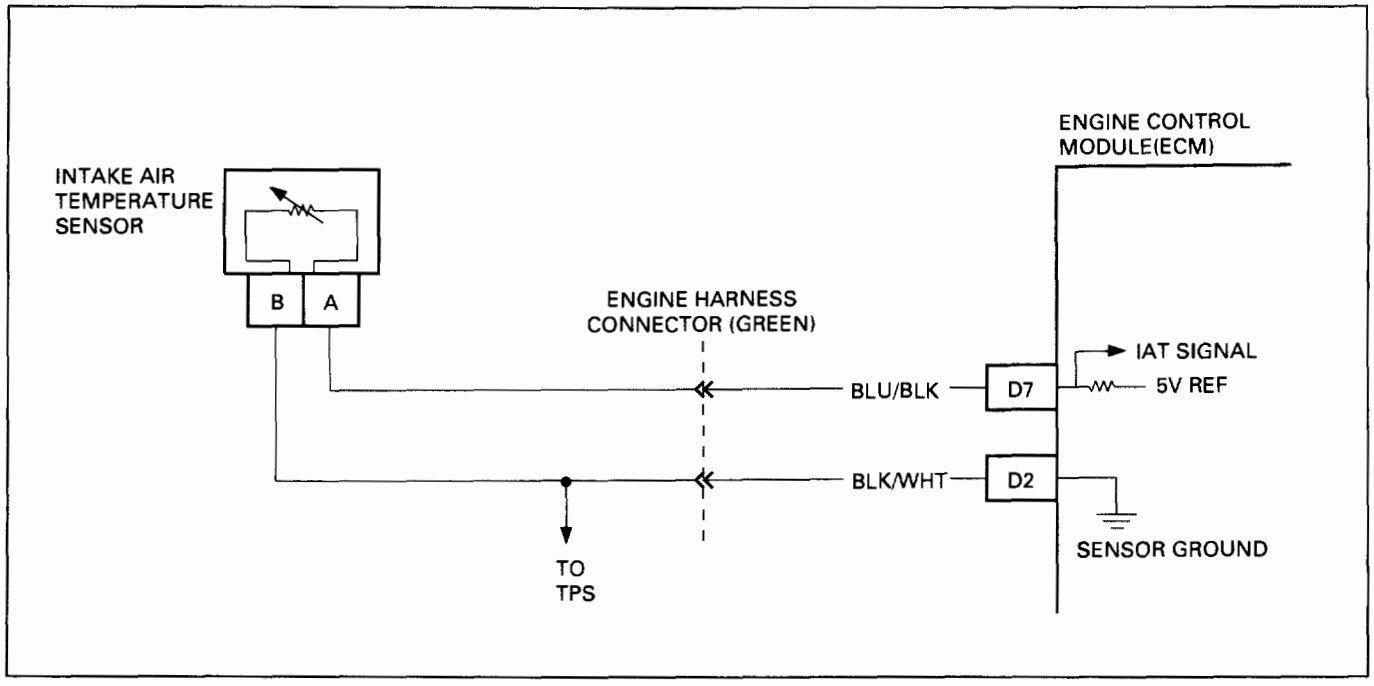

Fig. 6E2-40

DIAGNOSTIC TROUBLE CODE (DTC) 23B

INTAKE AIR TEMPERATURE (IAT) SENSOR CIRCUIT (HIGH TEMPERATURE INDICATED)

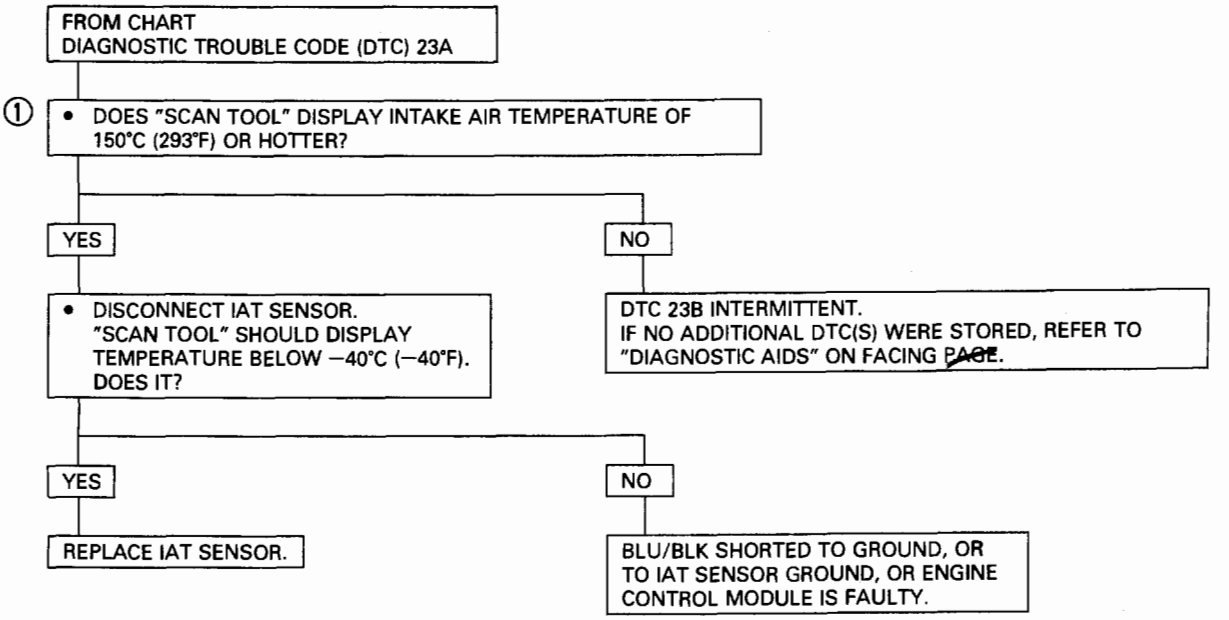

CLEAR DTC(S) AND CONFIRM "CLOSED LOOP" OPERATION AND NORMAL "CHECK ENGINE" MALFUNCTION INDICATOR LAMP OPERATION.

DIAGNOSTIC TROUBLE CODE (DTC) 24

VEHICLE SPEED SENSOR (VSS) CIRCUIT

Circuit Description:

Vehicle speed information is provided to the Engine Control Module (ECM) by the Vehicle Speed Sensor (VSS), which alternately grounds WHT wire located in the meter panel when the drive wheels are turning. This pulsing action takes place 4096 times per mile, and the ECM will calculate vehicle speed based on the time between "pulses".

Test Description:

Numbers below refer to circled numbers on the diagnostic chart.

① Diagnostic Trouble Code (DTC) 24 will set if vehicle speed equals 0 mile per hour when:

- Engine speed is between 1600 and 1825 revolution per minute.
- Vehicle speed is indicated less than 1 Km/H (0.6 mile per hour).
- Manifold absolute pressure reading below 20.7 KPa.
- Low speed condition (low manifold absolute pressure voltage, high manifold vacuum)
- Not in park or neutral. (A/T)
- All conditions are met simultaneously for 1.5 seconds.
- No DTC 33 is set.

These conditions are met during a road load deceleration. Disregard DTC 24 that sets when drive wheels are not turning.

Diagnostic Aids:

"Scan tool" should indicate a vehicle speed whenever the drive wheels are turning geater than 0.6 mile per hour. Check the WHT wire for proper connections to be sure they are clean and tight and the harness is routed correctly. Refer to "Intermittents" in "Symptoms", Section "6E2-B."

(A/T)- A faulty or misadjusted park/neutral position switch can result in a false DTC 24. Use a "Scan tool" and check for proper signal while in "DRIVE". Refer to CHART C-1A for park/neutral position switch check.

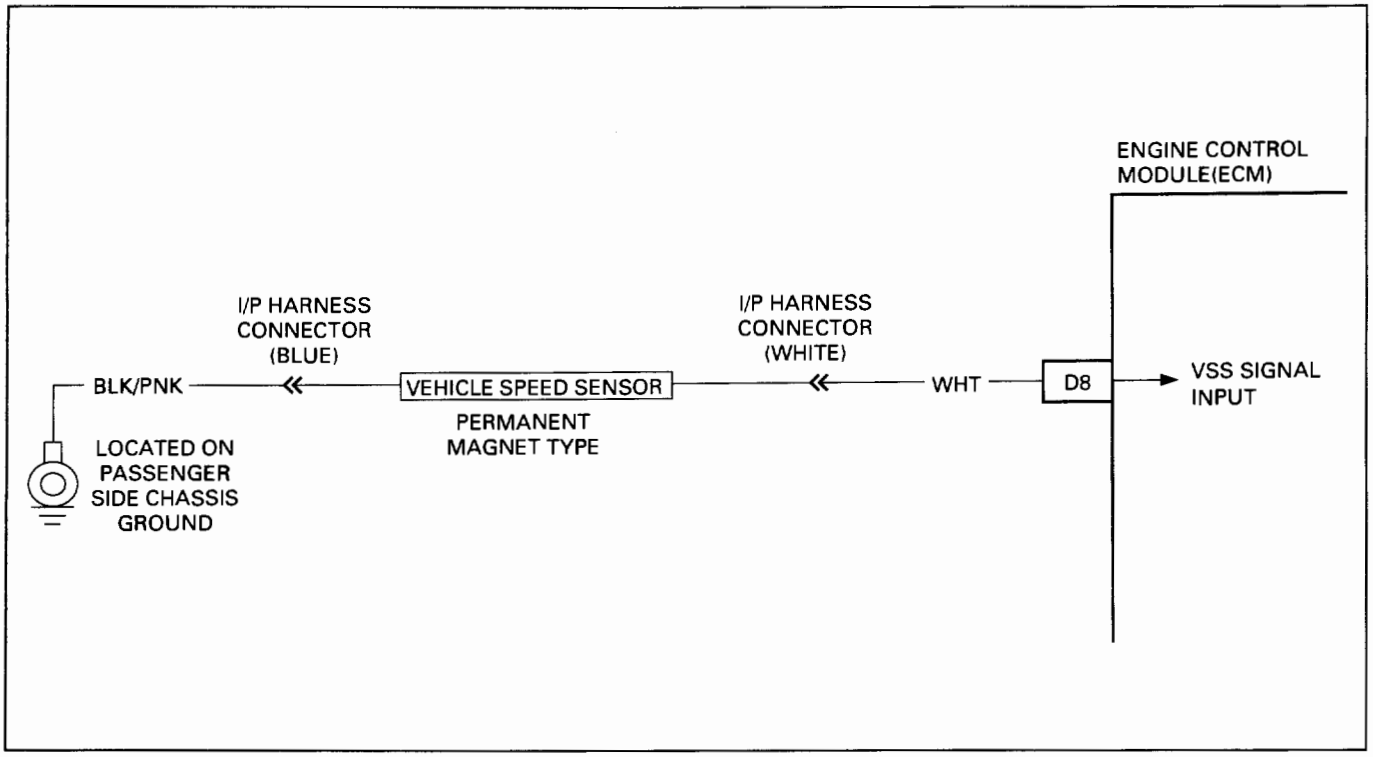

Fig. 6E2-41

DIAGNOSTIC TROUBLE CODE (DTC) 24

VEHICLE SPEED SENSOR (VSS) CIRCUIT

DISREGARD DIAGNOSTIC TROUBLE CODE 24 IF SET WHILE DRIVE WHEELS ARE NOT TURNING.

- VERIFY SPEEDOMETER IS WORKING, IF NOT, REFER TO SECTION 8 FOR NECESSARY REPAIR PROCEDURES.
- CLEAR DIAGNOSTIC TROUBLE CODE (DTC) FROM ENGINE CONTROL MODULE (ECM) AND RETEST. IF DIAGNOSTIC TROUBLE CODE RESETS, PROCEED WITH DTC 24 CHART.

①
- RAISE DRIVE WHEELS
- WITH ENGINE IDLING IN GEAR, "SCAN TOOL" SHOULD DISPLAY VEHICLE SPEED ABOVE 0.

DOES IT?

NO → DOES SPEEDOMETER WORK?

YES → DTC 24 IS INTERMITTENT. IF NO ADDITIONAL DIAGNOSTIC TROUBLE CODES WERE STORED, REFER TO "DIAGNOSTIC AIDS" ON FACING PAGE.

NO → USING A DVOM, BACKPROBE ECM TERMINAL "D8" WITH DRIVE WHEELS ROTATING. VOLTAGE SHOULD BE VARYING. IS IT?

YES → CHECK FOR OPEN IN WHITE WIRE A ECM TERMINAL "D8". IF OK REPLACE ECM.

NO → OPEN IN WHITE WIRE OR FAULTY SPEEDOMETER AND/OR SPEEDOMETER WIRING CIRCUIT

YES → POOR CONNECTION AT ECM OR FAULTY ECM

CLEAR DTC(S) AND CONFIRM "CLOSED LOOP" OPERATION AND NORMAL "CHECK ENGINE" MALFUNCTION INDICATOR LAMP OPERATION.

DIAGNOSTIC TROUBLE CODE (DTC) 32

EXHAUST GAS RECIRCULATION(EGR) CIRCUIT

Circuit Description:

Exhaust Gas Recirculation (EGR) valve operation is Engine Control Module (ECM) controlled. The ECM will ground the vacuum switch valve (VSV) to turn the EGR valve "ON" and "OFF". An EGR Back Pressure Transducer determines how long the EGR valve stays "ON" based on Exhaust Back Pressure supplied to the Transducer thru Tube "S". The ECM monitors the Integrator to determine it the EGR system is functioning. The ECM will command the EGR valve "OFF" briefly when the EGR is suppose to be "ON", the Integrator will change at least three (3) counts indicating the EGR valve did "close" when commanded. The ECM will then recheck the system again by commanding EGR valve "ON" when it should not be "ON" and again monitors the Integrator for at least a three (3) counts change indicating the EGR valve did come "ON" when commanded. If the EGR system fails this test five (5) times a malfunction diagnostic trouble code 32 will be logged and the malfunction indicator lamp will be "ON".

Test Description: Number(s) below refer to circled number(s) on the diagnostic chart.

① Checks the EGR valve will open and EGR passage is not restricted.
② Check that EGR valve VSV is operating properly.
③ Checks the EGR Back Pressure Transducer operation.
④ Test voltage source as well to EGR valve VSV.
⑤ Check EGR Back Pressure Transducer for proper operation.
⑥ Check operation of ECM circuit to EGR valve VSV.

The EGR valva chart is a check of the EGR system. If the EGR system works properly, check other items that could result in high Block Learn valve. The EGR valve passage being slightly restricted may cause diagnostic trouble code 32 to set.

- A sluggish Heated Oxygen Sensor may also cause this diagnostic trouble code to be set falsely.

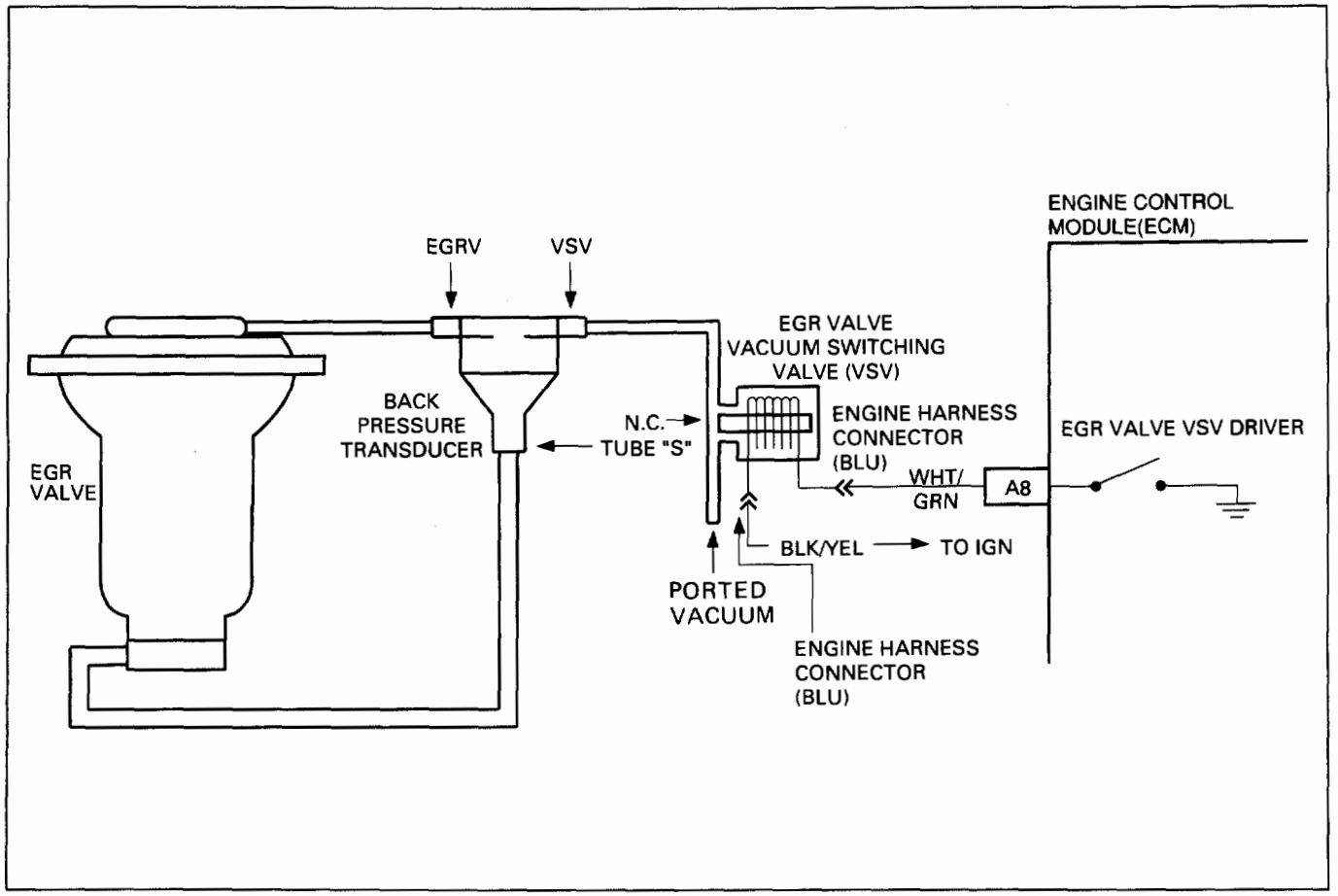

Fig. 6E2-42

DIAGNOSTIC TROUBLE CODE (DTC) 32

EXHAUST GAS RECIRCULATION(EGR) CIRCUIT

- FIRMLY GRASP TOP OF EXHAUST GAS RECIRCULATION (EGR) VALVE AND CHECK FOR LOOSENESS BY TRYING TO ROTATE VALVE IN BOTH DIRECTIONS.
  IS LOOSENESS FELT?

NO

YES → REPLACE EGR VALVE ASSEMBLY

①
- PLACE TRANSMISSION IN "PARK" OR "NEUTRAL".
- RUN WARM ENGINE AT IDLE.
- ENGINE TEMPERATURE MUST BE ABOVE 60°C (120°F).
- DISCONNECT VACUUM HOSE TO EGR VALVE.
- APPLY 10" INCHES OF VACUUM TO EGR VALVE.
- ENGINE SHOULD RUN ROUGH AND/OR STALL.
  DOES IT?

YES

②
- CONNECT VACUUM GAGE TO EGR SIDE OF VACUUM SWITCHING VALVE (VSV).
- INCREASE ENGINE SPEED ABOVE 2000 REVOLUTION PER MINUTE.
  SHOULD HAVE AT LEAST 10 INCHES OF VACUUM.
  DOES IT!

NO

- REMOVE EGR VALVE AND CLEAN ASSEMBLY.
- REPLACE VALVE IF NECESSARY.

YES

③
- DATA LINK CONNECTOR GROUNDED.
- ENGINE IDLING CHECK VACUUM SOURCE BEFORE EGR MODULATOR.
  SHOULD HAVE AT LEAST 10" OF VACUUM.
  DOES IT?

YES → REFER TO "DIAGNOSTIC AIDS" ON FACING PAGE.

NO

④
- IGNITION "ON", ENGINE "OFF".
- TEST LIGHT TO GROUND.
- BACKPROBE VOLTAGE SOURCE TO EGR VALVE VSV SOLENOID.
  TEST LIGHT SHOULD BE "ON".
  IS IT?

YES

⑥
- REPEAT ABOVE TEST WITH TEST LIGHT TO BATTERY POSITIVE VOLTAGE.
- BACKPROBE EGR VALVE VSV SOLENOID ENGINE CONTROL MODULE CIRCUIT.
  TEST LIGHT SHOULD BE "ON".
  IS IT?

YES → RESTRICTED VACUUM SOURCE OR FAULTY SOLENOID

NO → OPEN IN CIRCUIT OR FAULTY ENGINE CONTROL MODULE

NO → OPEN IN CIRCUIT

NO

⑤
- INSTALL VACUUM GAUGE TO THE VACUUM HOSE AT THE EGR VALVE.
- INCREASE ENGINE SPEED TO ABOVE 2000.
  AT LEAST 10" OF VACUUM.
  DOES IT!

YES → EGR SYSTEM WORKING PROPERLY. NO TROUBLE FOUND.

NO
- INSPECT BACK PRESSURE TUBE "S" FOR DAMAGE OR RESTRICTION.
- INSPECT VACUUM HOSE FROM THE EGR MODULATOR TO THE EGR VALVE FOR DAMAGE OR RESTRICTION.
  IF OK, REPLACE EGR MODULATOR.

DIAGNOSTIC TROUBLE CODE (DTC) 33A

MANIFOLD ABSOLUTE PRESSURE (MAP) SENSOR CIRCUIT (SIGNAL VOLTAGE HIGH-LOW VACUUM)

Circuit Description:

The Manifold Absolute Pressure (MAP) Sensor responds to changes in manifold pressure (vacuum). The Engine Control Module (ECM) receives this information as a signal voltage that will vary from about 1 to 1.5 volts, at closed throttle idle, to 4-4.5 volts at wide open throttle (low vacuum).
If the MAP sensor fails, the ECM will substitute a fixed MAP value based on Throttle Position Sensor to control fuel delivery.

Test Description:

Numbers below refer to circled numbers on the diagnostic chart.

① This step will determine if Diagnostic Trouble Code (DTC) 33 is the result of a hard failure or an intermittent condition.
A DTC 33 will set if:
- MAP signal indicates greater than 95 kPa (low vacuum).
- Throttle position sensor less than 2%.
- No DTC 21A or DTC 21B is set.
- These conditions are present for a time longer than 5.3 seconds.

② This step simulates conditions for a DTC 33B. If the ECM recognizes the change, the ECM, and BLU/ORG and GRY/RED wires are OK. If GRY wire is open, there may also be a DTC 23 stored.

Diagnostic Aids:

With the Ignition "ON" and the engine stopped, the manifold pressure is equal to atmospheric pressure and the signal voltage will be high. This information is used by the ECM as an indication of vehicle altitude and is referred to as barometric pressure. Comparison of this barometric pressure reading with a known good vehicle with the same sensor is a good way to check accuracy of a "suspect" sensor. Readings should be the same ±0.4 volt.

A DTC 33A will result if GRY/Wire is open, or if GRY/RED is shorted to voltage or to BLU/ORG wire.

If DTC 33A is intermittent, refer to Section "6E2-B".

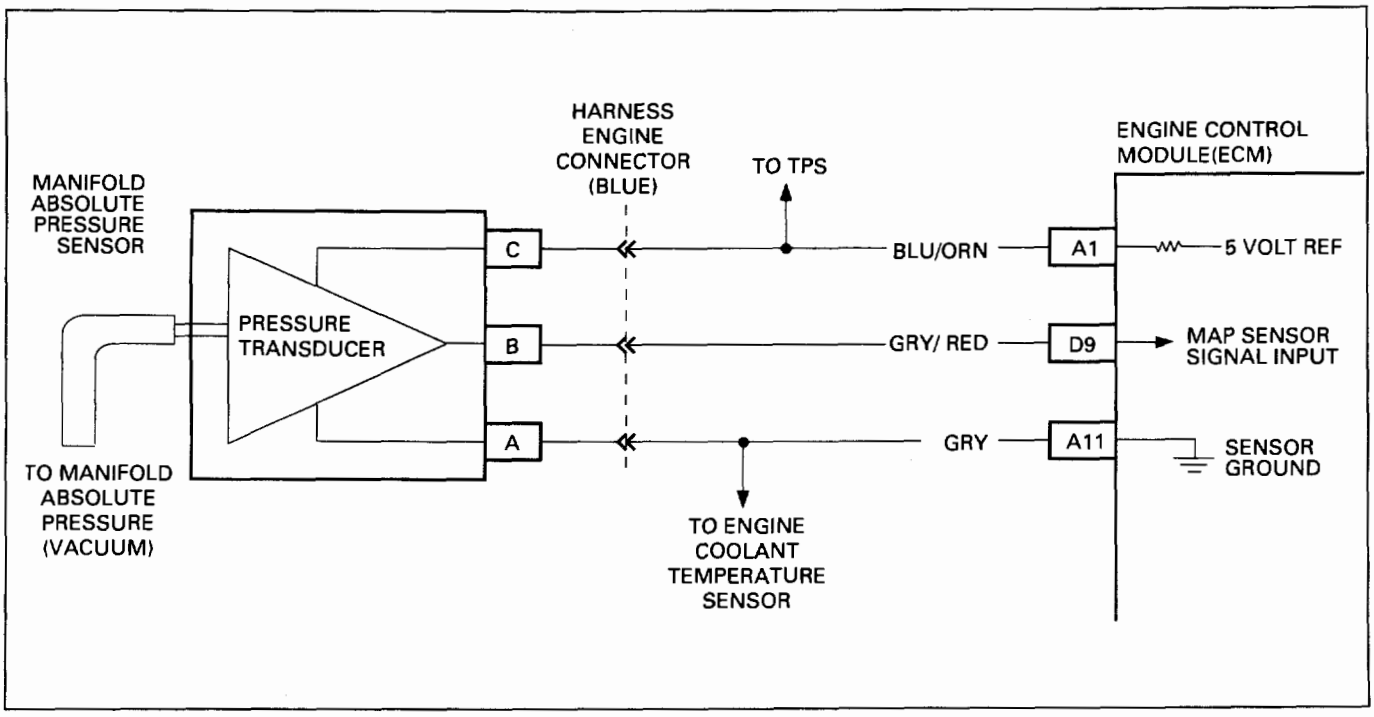

Fig. 6E2-43

DIAGNOSTIC TROUBLE CODE (DTC) 33A

MANIFOLD ABSOLUTE PRESSURE (MAP) SENSOR CIRCUIT (SIGNAL VOLTAGE HIGH-LOW VACUUM)

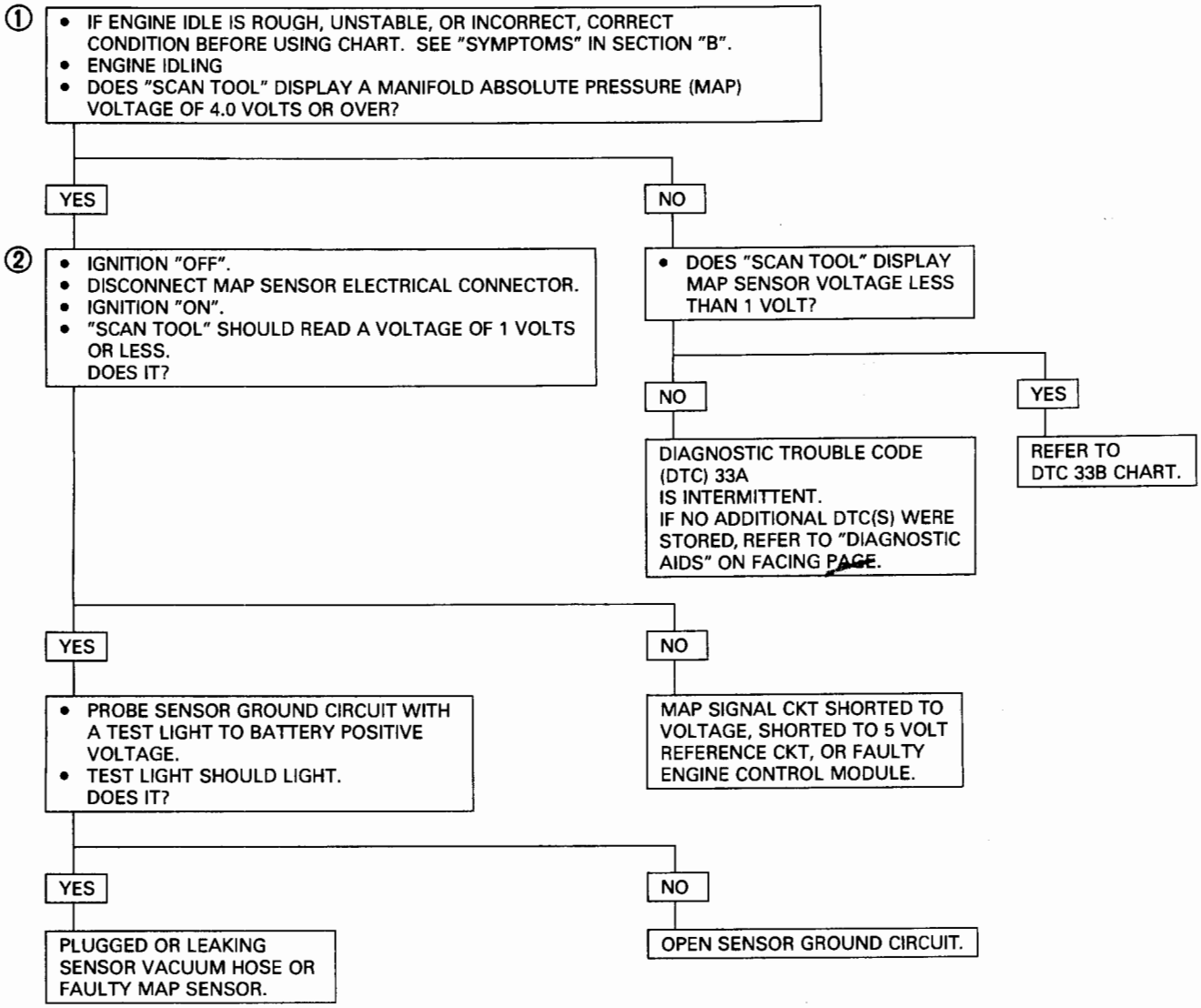

CLEAR DTC(S) AND CONFIRM "CLOSED LOOP" OPERATION AND NORMAL "CHECK ENGINE" MALFUNCTION INDICATOR LAMP OPERATION.

DIAGNOSTIC TROUBLE CODE (DTC) 33B

MANIFOLD ABSOLUTE PRESSURE (MAP) SENSOR CIRCUIT (SIGNAL VOLTAGE LOW-HIGH VACUUM)

Circuit Description:

The Manifold Absolute Pressure (MAP) Sensor responds to changes in manifold pressure (vacuum). The Engine Control Module (ECM) receives this information as a signal voltage that will vary from about 0.45 to 0.85 volts, at closed throttle idle, to 3.8-4.5 volts at Wide Open Throttle (low vacuum).
If the MAP sensor fails, the ECM will substitute a fixed MAP value based on Throttle Position Sensor to control fuel delivery.

Test Description:

Numbers below refer to circled numbers on the diagnostic chart.

① This step will determine if Diagnostic Trouble Code (DTC) 33B is the result of a hard failure or an intermittent condition.
A DTC 33B will set if:
- Engine speed is greater than 1100 revolution per minute.
- Throttle position sensor is greater than 20%.
- MAP signal indicates less then 10.7 kPa.
- These conditions are present for a time longer than 0.125 seconds.
- No DTC 21A or DTC 21B is set.

② Jumpering harness terminals "B" to "C", 5 volt to signal, will determine if the sensor is at fault, or if there is a problem with ECM or wiring.

③ The "Scan tool" may not display 12 volts. The important thing is that the ECM recognizes the voltage as more than 4 volts, indicating that the ECM and GRY/RED wire are OK.

Diagnostic Aids:

With the Ignition "ON" and the engine stopped, the manifold pressure is equal to atmospheric pressure and the signal voltage will be high. This information is used by the ECM as an indication of vehicle altitude and is referred to as barometric pressure. Comparison of this barometric pressure reading with a known good vehicle with the same sensor is a good way to check accuracy of a "suspect" sensor. Readings should be the same ±0.4 volt.

A DTC 33B will result if GRY/Wire is open, or if GRY/RED is shorted to voltage or to BLU/ORG wire.

If DTC 33B is intermittent, refer to Section "6E2-B".

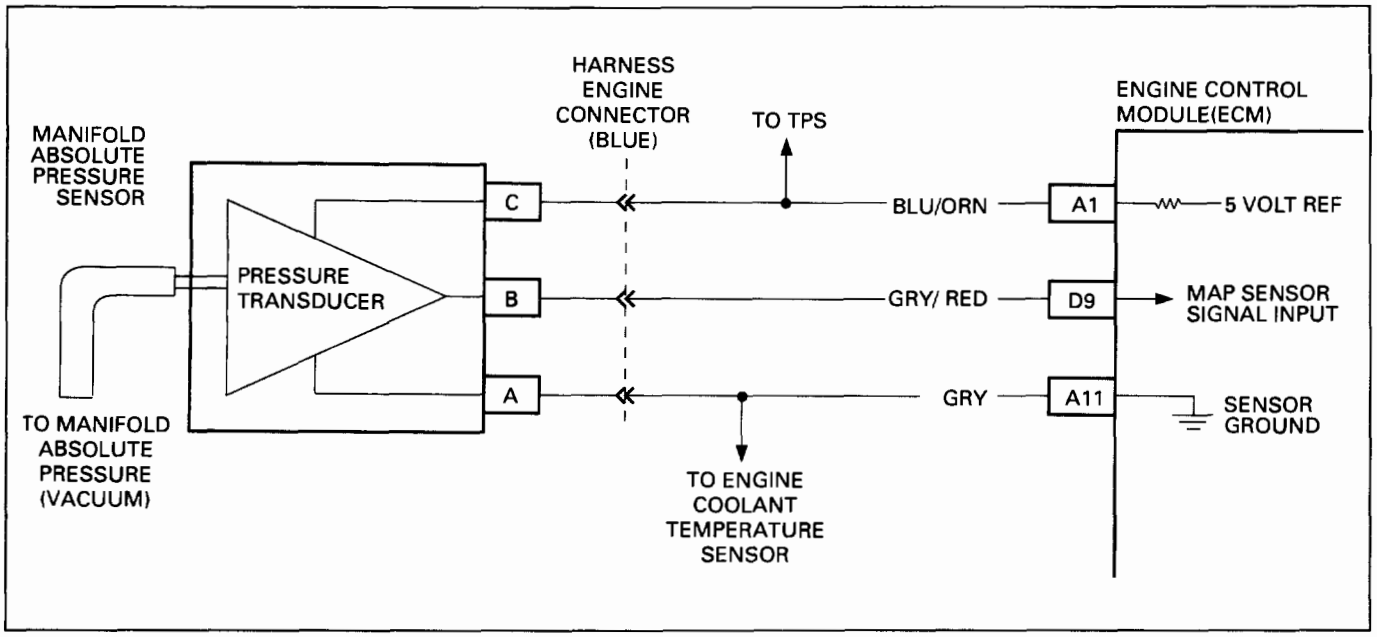

Fig. 6E2-44

DIAGNOSTIC TROUBLE CODE (DTC) 33B

MANIFOLD ABSOLUTE PRESSURE (MAP) SENSOR CIRCUIT (SIGNAL VOLTAGE LOW-HIGH VACUUM)

FROM DIAGNOSTIC TROUBLE CODE (DTC) CHART 33A

① • ENGINE IDLING
DOES "SCAN TOOL" DISPLAY MAP VOLTAGE BELOW .25 VOLTS?

YES

② • IGNITION "OFF".
• DISCONNECT SENSOR ELECTRICAL CONNECTOR.
• JUMPER HARNESS TERMINALS "2" TO "1".
• IGNITION "ON".
• MANIFOLD ABSOLUTE PRESSURE VOLTAGE SHOULD READ OVER 4 VOLTS.
DOES IT?

NO

③ • IGNITION "OFF"
• REMOVE JUMPER WIRE.
• PROBE TERMINAL "B" GREY/RED WIRE WITH A TEST LIGHT TO BATTERY POSITIVE VOLTAGE.
• IGNITION "ON".
• "SCAN TOOL" SHOULD READ OVER 4 VOLTS.
DOES IT?

YES

5 VOLT REFERENCE CIRCUIT OPEN OR SHORTED TO GROUND OR FAULTY ENGINE CONTROL MODULE.

NO

GRY/RED WIRE OPN
OR
GRY/RED WIRE SHORTED TO GROUND
OR
GRY/RED WIRE SHORTED TO SENSOR GROUND
OR
FAULTY ENGINE CONTROL MODULE.

YES

FAULTY CONNECTION OR SENSOR.

NO

DTC 33B IS INTERMITTENT.
IF NO ADDITIONAL DTC(S) WERE STORED, REFER TO "DIAGNOSTIC AIDS" ON FACING PAGE.

CLEAR DTC(S) AND CONFIRM "CLOSED LOOP" OPERATION AND NORMAL "CHECK ENGINE" MALFUNCTION INDICATOR LAMP OPERATION.

DIAGNOSTIC TROUBLE CODE (DTC) 42

IGNITION CONTROL (IC) CIRCUIT

Circuit Description:

The Electronic Ignition (EI) module sends a reference signal (YEL/RED wire) to the Engine Control Module (ECM), when the engine is cranking. While the engine speed is under 500 revolution per minute, the ignition control (IC) module will control ignition timing. When the engine speed exceeds 500 revolution per minute, the ECM applies 5 volts to the bypass line to switch the timing to ECM control.

When the system is running on the EI module, that is, no voltage on the bypass line, the EI module grounds the IC signal. The ECM expects to sense or detect no voltage on the IC line during this condition. If it senses or detects a voltage, it sets Diagnostic Trouble Code (DTC) 42 and will not go into the IC mode.

When the revolution per minute for IC is reached (about 500 revolution per minute), voltage will be applied to the bypass line. The IC should no longer be grounded in the EI module, so the IC voltage should be varying.

If the bypass line is open or grounded, the EI module will not switch to IC mode, so the IC voltage will be low and DTC 42 will be set.

If the IC line is grounded, the EI module will switch to IC but, because the line is grounded, there will be no IC signal. A DTC 42 will be set.

Test Description: Number(s) below refer to circled number(s) on the diagnostic chart.

① DTC 42 means the ECM has detected an open or short to ground in the IC or bypass circuits. This test confirms DTC 42 and that the fault causing the DTC is present.

② Checks for a normal IC ground path through the IC module. An IC circuit wire, shorted to ground, will also read less than 500 ohms, however, this will be checked later.

③ As the test light voltage touches bypass circuit wire, the module should switch, causing the ohmmeter to "over-range" if the meter is in the 1000-2000 ohms position. Selecting the 10-20,000 ohms position will indicate above 5000 ohms. The important thing is that the module "switched."

④ The module did not switch and this step checks for:
- IC circuit wire shorted to ground.
- Bypass circuit wire open.
- Faulty IC module connection or module.

⑤ Confirms that DTC 42 is a faulty ECM and not an intermittent in circuit wire or bypass circuit wire.

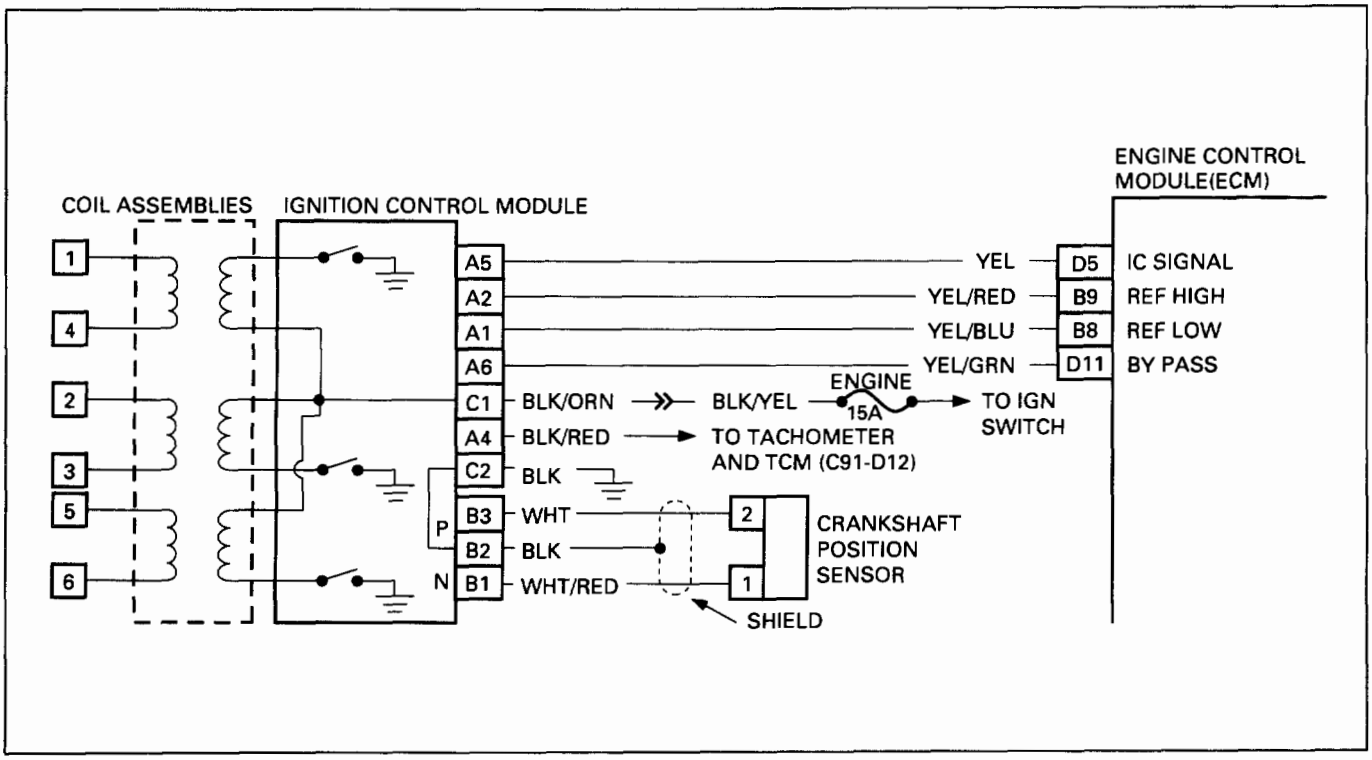

Fig. 6E2-45

DIAGNOSTIC TROUBLE CODE (DTC) 42

IGNITION CONTROL (IC) CIRCUIT

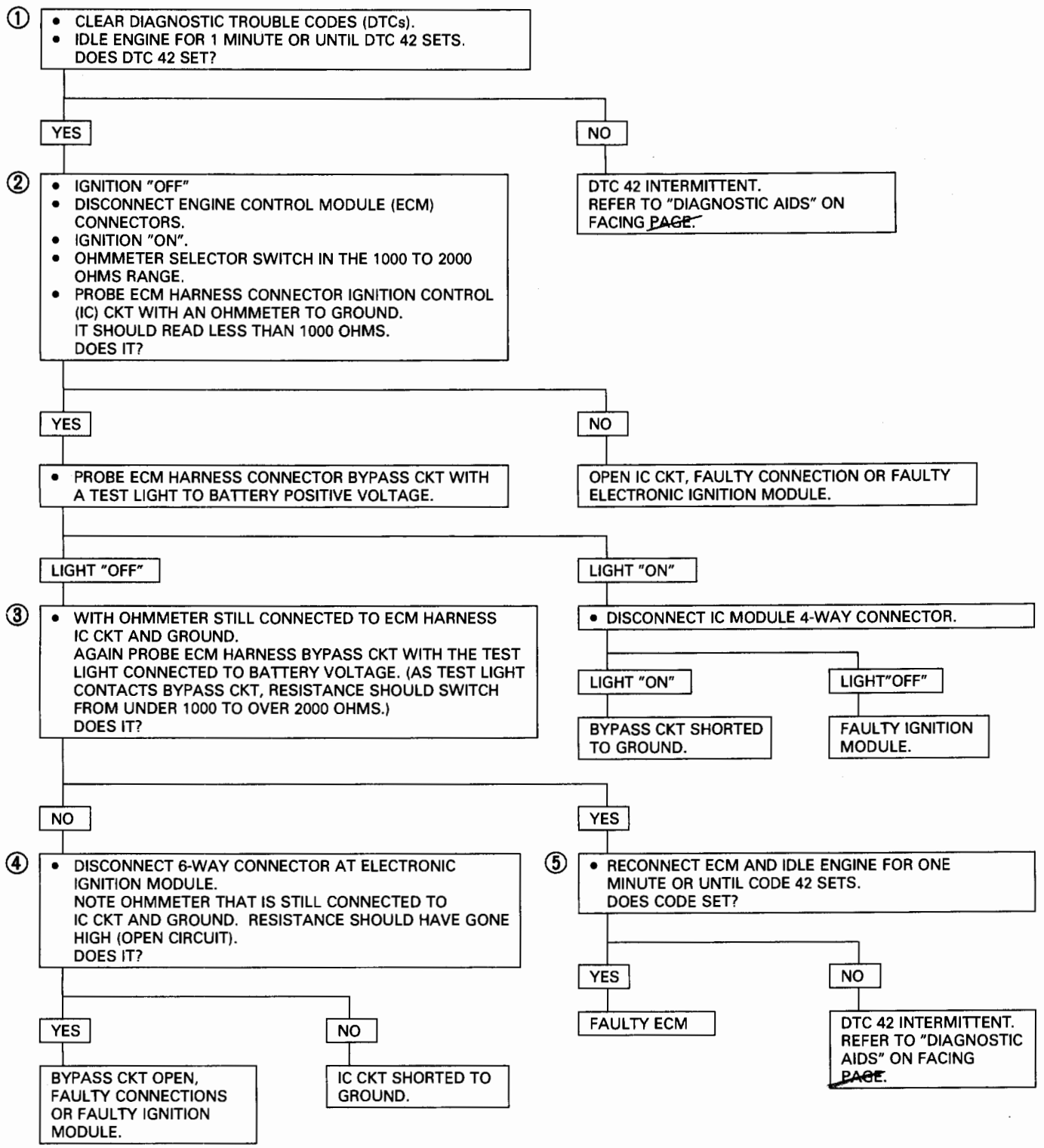

DIAGNOSTIC TROUBLE CODE (DTC) 43

KNOCK SENSOR (KS) CIRCUIT (DOHC)

Circuit Description:

Knock Sensor (KS) is accomplished with a module that sends a voltage signal to the Engine Control Module (ECM). As the KS detects engine knock, the voltage from the KS module to the ECM drops, and this signals the ECM to retard timing. The ECM will retard the timing when knock is detected and revolution per minute is above about 880 revolution per minute.

Diagnostic Trouble Code (DTC) 43 means the ECM has been low voltage at CKT D10 for longer than 4.0 seconds with the engine running or the system has failed the functional check.

DTC 43 will set when:

- After run spark, more than 4 seconds
- KS input signal has been low more than 4 seconds

Test Description: Number(s) below refer to circled number(s) on the diagnostic chart.

① If the conditions for a DTC 43 are present the "Scan tool" will always display "YES". There should not be a knock at idle unless an internal engine problem, or a system problem exists.

② This test will determine if the system is functioning at this time. Usually a KS signal can be generated by tapping on the right exhaust manifold. If no KS signal is generated try tapping on block close to the area of the sensor.

③ Because DTC 43 sets when the signal voltage on CKT D10 remains low this test should cause the signal on CKT to go high. The 12 volts signal should be seen by the ECM as "no knock" if the ECM and wiring are OK.

④ This test will determine if the KS signal is being detected on CKT WHT or if the KS module is at faulty.

⑤ If CKT WHT is routed is close to secondary ignition wires the KS module may see the interference as a KS signal.

⑥ This checks the ground circuit to the module. An open ground will cause the voltage on CKT D10 to be about 5 volts which would cause the DTC 43 functional test to fail.

⑦ Contacting CKT WHT with a test light to 5 volts should generate a KS signal. This will determine if the KS module is operating correctly.

Diagnostic Aids: DTC 43 can be caused by a faulty connection at the KS module or at the ECM. Also check CKT D10 for possible open or short to ground.

Refer to "Intermittents" in "Symptoms," Section "6E2-B".

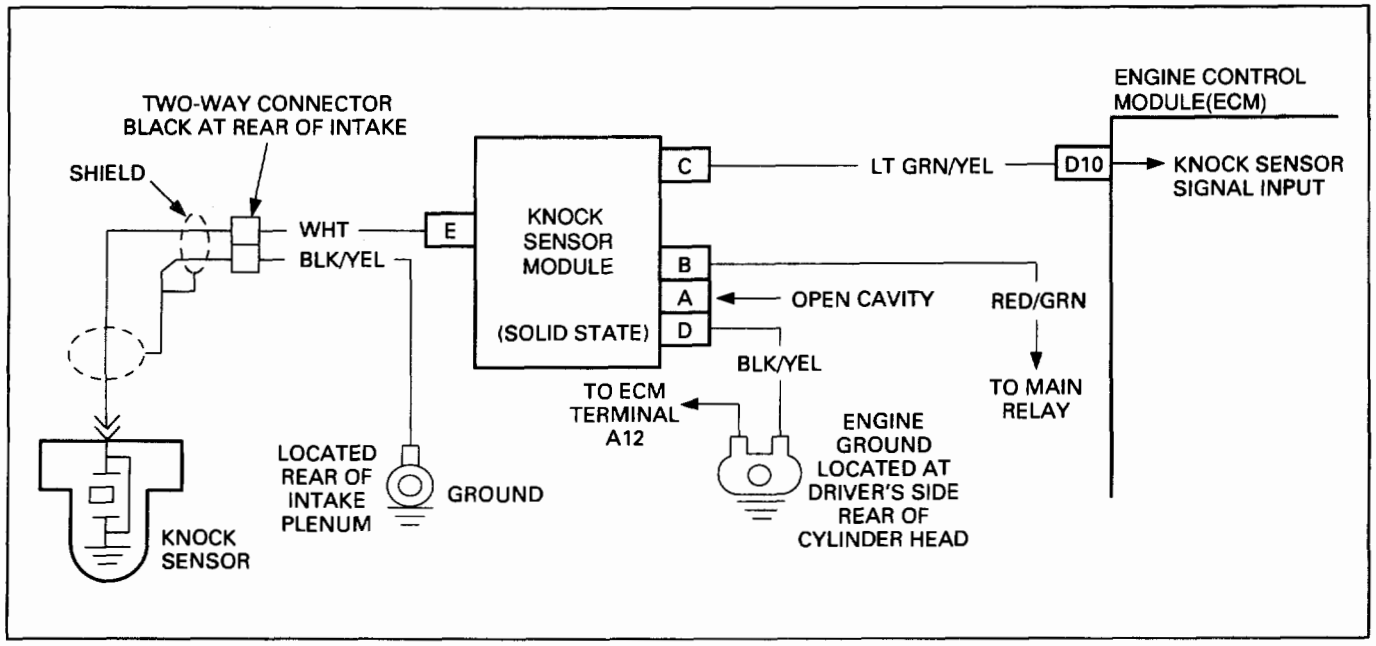

Fig. 6E2-46

DIAGNOSTIC TROUBLE CODE (DTC) 43

KNOCK SENSOR (KS) CIRCUIT (DOHC)

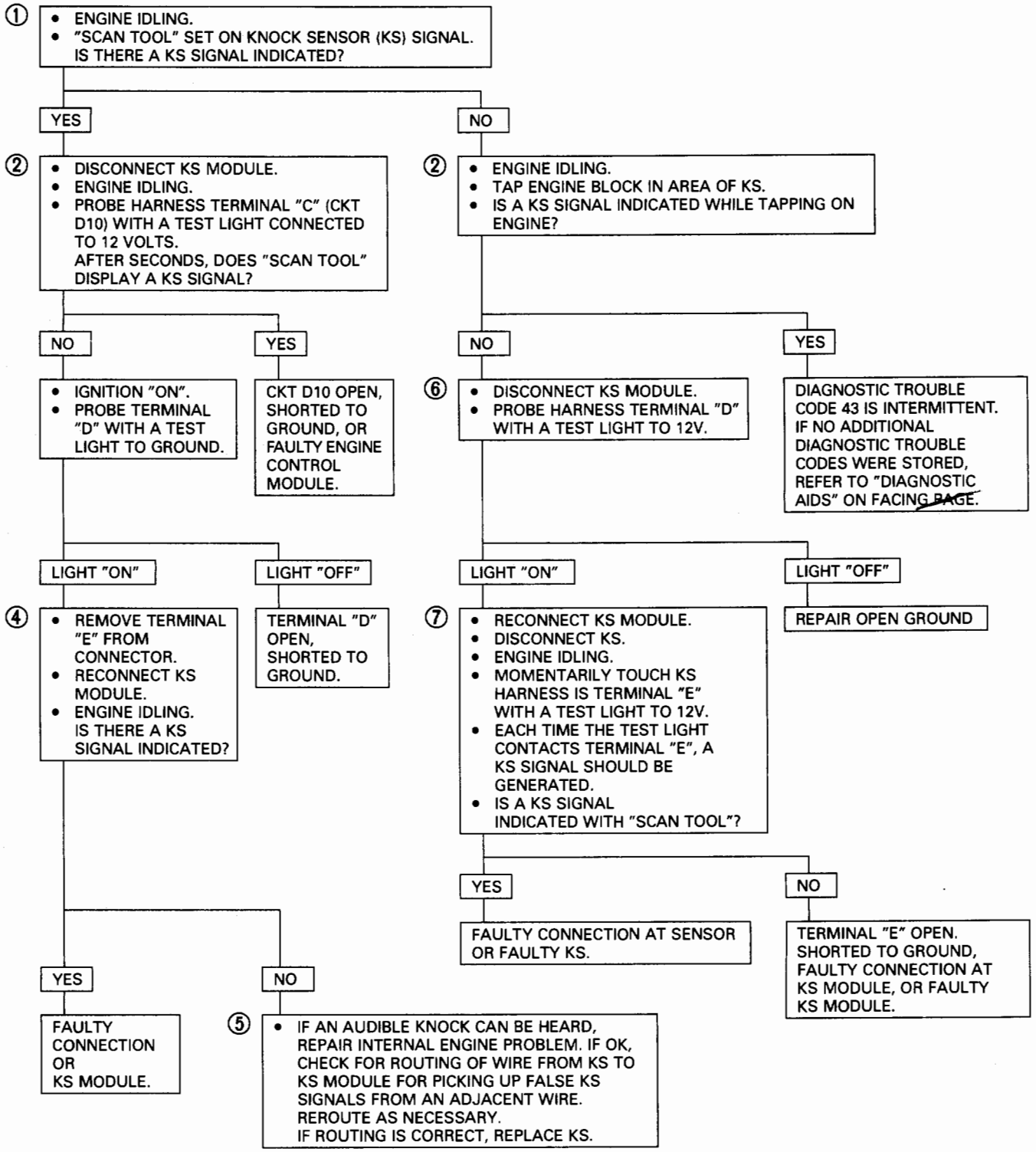

DIAGNOSTIC TROUBLE CODE (DTC) 44

HEATED OXYGEN SENSOR (HO2S) CIRCUIT (LEAN HEATED OXYGEN SENSOR (HO2S) SIGNAL INDICATED)

Circuit Description:

The engine control module supplies a voltage of about .43 volt between terminals "B3" and "B2". (If measured with a 10 megohm digital voltmeter, this may read as low as .32 volts.) The Heated Oxygen Sensor (HO2S) varies the voltage within a range of about 1 volt, if the exhaust is rich, down through about .10 volt, if exhaust is lean. The sensor is like an open circuit and produces no voltage, when it is below about 360°C (600°F). An open sensor circuit, or cold sensor, cause "Open Loop" operation.

Test Description:

Numbers below refer to circled numbers on the diagnostic chart.

① Diagnostic Trouble Code (DTC) 44 is set, when the O2S signal voltage is fixed below .100 mV and the following:

- Throttle position sensor greater than 9.8%.
- No DTC 21 or 33.
- The engine has been running at least for 180 seconds.
- System is operating in "Closed Loop".
- Oxygen signal voltage is steady between .347 volt and .547 volt.
- Engine Operation Temperature 69.5°C (155°F).
- All of the above conditions present for 25 sec.
- Integrator not at 128.

Diagnostic Aids:

Using the "Scan tool", observe the block learn value at different revolution per minute. The "Scan tool" also displays the block cells, so the block learn values can be checked in each of the cells, to determine when the DTC 44 may have been set. If the conditions for DTC 44 exist, the block learn values will be around 150.

- Check for ground in wire between connector sensor.
- **Fuel Contamination** — Water, even in small amounts, near the in-tank fuel pump inlet can be delivered to the injector. The water causes a lean HO2S signal and can set a DTC 44.
- **Fuel Pressure** — System will be lean if pressure is too low. If may be necessary to monitor fuel pressure, while driving the car at various road speeds and/or loads to confirm. See Fuel System diagnosis CHART A-5.
- **Exhaust Leaks** — If there is an exhaust leak, the engine can cause outside air to be pulled into the exhaust and past the sensor. Vacuum or crankcase leaks can cause a lean condition.
- If DTC 44 is intermittent, refer to Section "6E2-B".
- **Fuel Injectors** — The wrong fuel injector(s) could be the cause of a lean HO2S signal condition. Verify that the correct fuel injector(s) are installed in the vehicle. Refer to the service parts manual for correct part and part number.

Refer to "Engine Control Module and Sensors", Section "6E2-C1" for proper diagnosis.

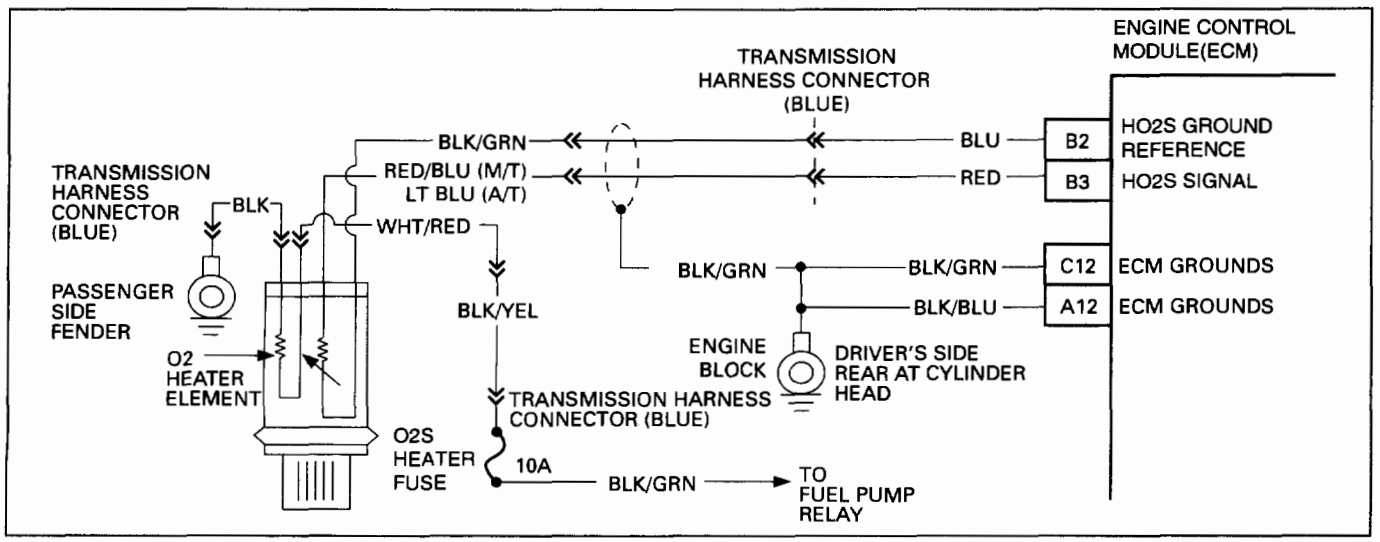

Fig. 6E2-47

DIAGNOSTIC TROUBLE CODE (DTC) 44

HEATED OXYGEN SENSOR (HO2S) CIRCUIT (LEAN HEATED OXYGEN SENSOR (HO2S) SIGNAL INDICATED)

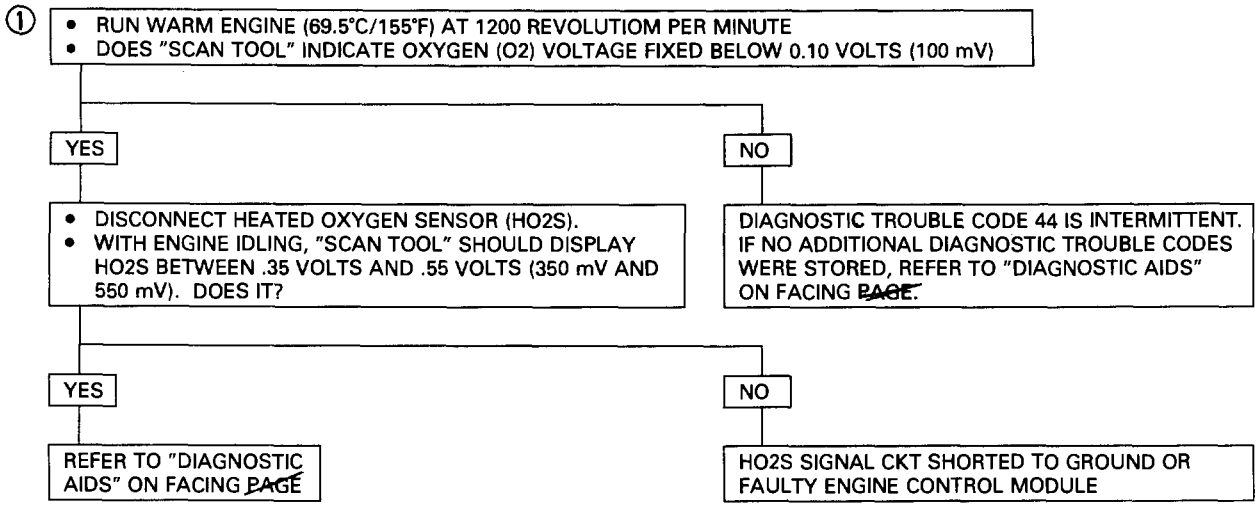

CLEAR DIAGNOSTIC TROUBLE CODES AND CONFIRM "CLOSED LOOP" OPERATION AND NORMAL "CHECK ENGINE" MALFUNCTION INDICATOR LAMP OPERATION.

DIAGNOSTIC TROUBLE CODE (DTC) 45

HEATED OXYGEN SENSOR (HO2S) CIRCUIT (RICH HEATED OXYGEN SENSOR (HO2S) SIGNAL INDICATED)

Circuit Description:

The Engine Control Module (ECM) supplies a voltage of about .45 volt between terminals "B3" and "B2". (If measured with a 10 megohm digital voltmeter, this may read as low as .32 volts.) The Heated Oxygen Sensor (HO2S) varies the voltage within a range of about 1 volt, if the exhaust is rich, down through about .10 volt, if exhaust is lean.

The sensor is like an open circuit and produces no voltage, when it is below about 360°C (600°F). An open sensor circuit, or cold sensor, cause "Open Loop" operation.

Test Description:

Numbers below refer to circled numbers on the diagnostic chart.

① Diagnostic Trouble Code (DTC) 45 is set, when the HO2S signal voltage is fixed above .10 volts (100 mV) under the following conditions:

- Throttle position sensor greater than 9.8%.
- No DTC 21A/21B or 33A/33B.
- The engine is running for longer than 180 seconds.
- System is operating in "Closed Loop".
- O2 Signal Voltage is les than 0.347 volts and greater than .547 volts.
- Temperature above 69.5°C (155°F).
- Integrator not at 128
- All of the above condition present for 50 sec.

Diagnostic Aids:

The DTC 45, or rich HO2S signal, is most likely caused by one of the following:

- **Fuel Pressure** — System will go rich, if pressure is too high. The ECM can compensate for some increase. However, if it gets too high, a DTC 45 will be set. See Fuel System diagnosis CHART A-5.
- **HEI Shielding** — An open ground CKT BLK/GRN may result in EMI, or induced electrical "noise". The ECM looks at this "noise" as reference pulses. The additional pulses result in a higher than actual engine speed signal. The ECM then delivers too much fuel, causing system to go rich. Engine tachometer will also, show higher than actual engine speed, which can help in diagnosing this problem.
- **Evaporate emission canister purge** — Check for fuel saturation. If full of fuel, check canister control and hoses. See evaporate emission canister purge, Section "C3".
- **Manifold absolute pressure (MAP) sensor** — An output that causes the ECM to sense a higher than normal MAP (low vacuum) can cause the system to go rich. Disconnecting the MAP sensor will allow the ECM to set a fixed value for the MAP sensor. Substitute a different MAP sensor, if the rich condition is gone, while the sensor is disconnected.
- **Throttle position sensor** — An intermittent throttle position sensor output will cause the system to go rich, due to a false indication of the engine accelerating.
- **O2 sensor contamination** — Inspect HO2S for silicone contamination from fuel, or use of improper RTV sealant. The sensor may have a white, powdery coating and result in a high, but false signal voltage (rich HO2S signal indication). The ECM will then reduce the amount of fuel delivered to the engine, causing a severe surge driveability problem.
- **Exhaust gas recirculation** — Valve sticking open at idle, usually accompanied by a rough idle, or stall complaint, especially at idle. Refer to CHART C-7A to check exhaust gas recirculation system.

If DTC 45 is intermittent, refer to Section "6E2-B".

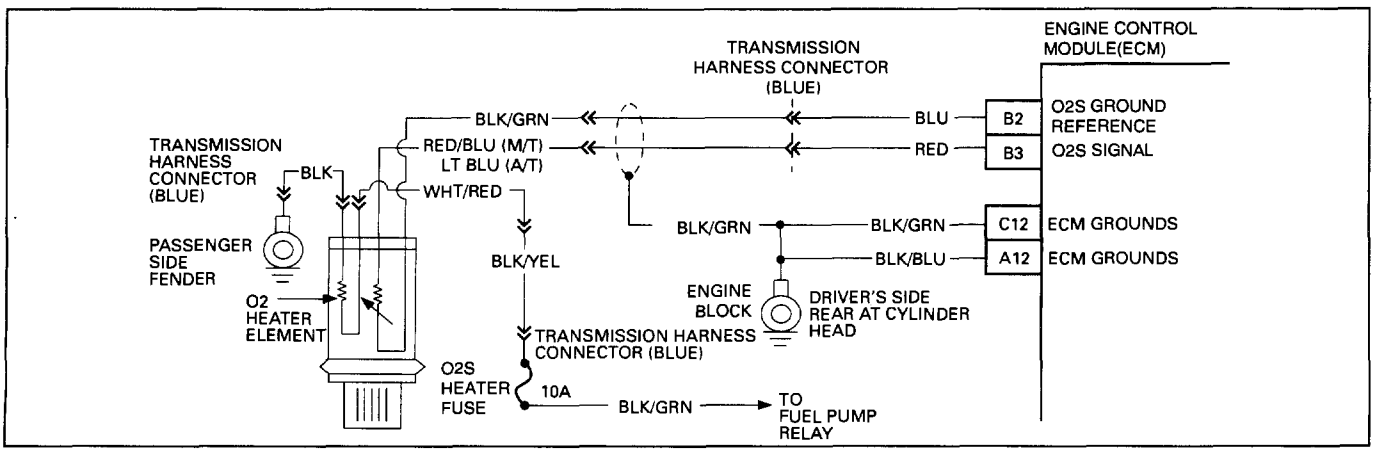

Fig. 6E2-48

DIAGNOSTIC TROUBLE CODE (DTC) 45

HEATED OXYGEN SENSOR (HO2S) CIRCUIT (RICH HEATED OXYGEN SENSOR (HO2S) SIGNAL INDICATED)

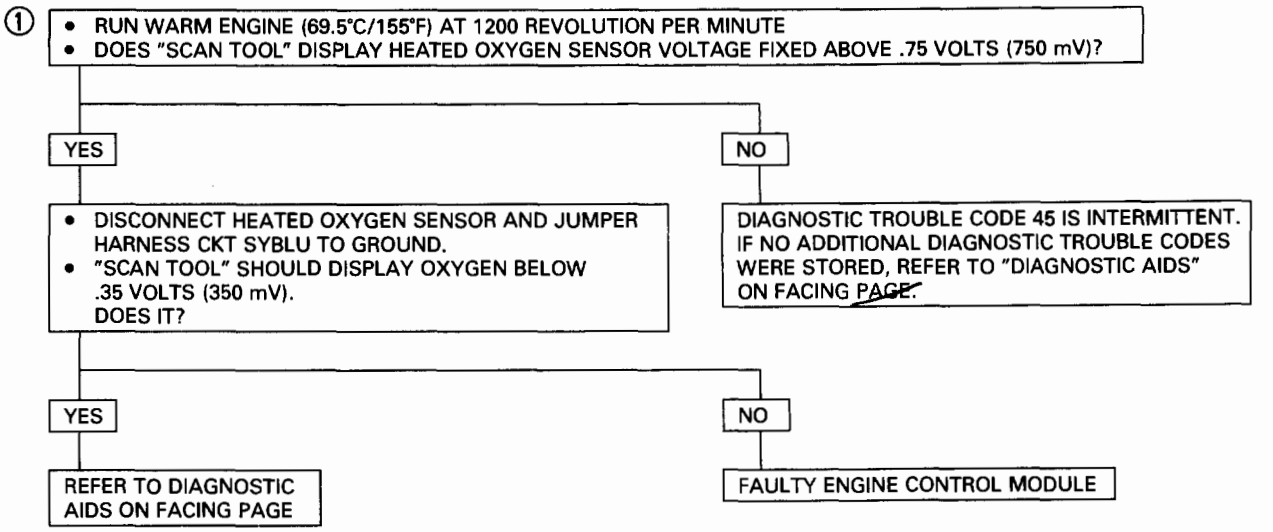

CLEAR DIAGNOSTIC TROUBLE CODES AND CONFIRM "CLOSED LOOP" OPERATION AND NORMAL "CHECK ENGINE" MALFUNCTION INDICATOR LAMP OPERATION.

DIAGNOSTIC TROUBLE CODE (DTC) 51

ENGINE CONTROL MODULE (ECM) FAILURE ECM FAILED OR ELECTRICALLY ERASABLE PROGRAMMABLE READ ONLY MEMORY FAILURE)

CHECK THAT ALL ECM CONNECTIONS ARE GOOD IF OK, CLEAR MEMORY AND RECHECK ECM. IF CODE 51 REAPPEARS, REPLACE ECM.

CLEAR DIAGNOSTIC TROUBLE CODES AND CONFIRM "CLOSED LOOP" OPERATION AND NORMAL "CHECK ENGINE" MALFUNCTION INDICATOR LAMP OPERATION.

SECTION B

SYMPTOMS

CONTENTS

Important Preliminary Checks ..... 6E2—89
Before Starting ..... 6E2—89
Symptom ..... 6E2—89
Visual/Physical Check ..... 6E2—89
Intermittents ..... 6E2—90
Hard Start ..... 6E2—90
Surges and/or Chuggles ..... 6E2—91
Lack of Power, Sluggish, or Spongy .... 6E2—92
Detonation/Spark Knock ..... 6E2—92
Hesitation, Sag, Stumble ..... 6E2—93
Cuts Out, Misses ..... 6E2—93
Rough, Unstable, or Incorrect Idle, Stalling ..... 6E2—94
Poor Fuel Economy ..... 6E2—95
Excessive Exhaust Emissions or Odors .. 6E2—96
Backfire ..... 6E2—96
Dieseling, Run-on ..... 6E2—97
Restricted Exhaust System Check (CHART B-1) ..... 6E2—98

IMPORTANT PRELIMINARY CHECKS

BEFORE STARTING

Before using this section you should have performed the on-board diagnostic system check and determined that:

1. The engine control module and "Check Engine" malfunction indicator lamp are operating correctly.
2. There are no diagnostic trouble codes stored, or there is a diagnostic trouble code but no "Check Engine" malfunction indicator lamp.

SYMPTOM

Verify the customer complaint, and locate the correct symptom in the table of contents. Check the items indicated under that symptom.

VISUAL/PHYSICAL CHECK

Several of the symptom procedures call for a Careful Visual/Physical Check. The importance of this step cannot be stressed too strongly - it can lead to correcting a problem without further checks and can save valuable time. This check should include:

- Engine control module grounds for being clean, tight and in their proper location.
- Vacuum hoses for splits, kinks, and proper connections, as shown on "Vehicle Emission Control Information" label. Check thoroughly for any type of leak or restriction.
- Air leaks at throttle body mounting area and intake manifold sealing surfaces.
- Ignition wires for cracking, hardness, proper routing and carbon tracking.
- Wiring for proper connections, pinches and cuts.
- Fuel lines for being pinched or misrouted.

INTERMITTENTS

Definition: Problem may or may not turn "ON" the "Check Engine" malfunction indicator lamp or store Diagnostic Trouble Code (DTC).

DO NOT use the DTC charts in "Engine Components/ Wiring Diagrams/Diagnostic Charts," Section "6E2-A" for intermittent problem. The fault must be present to locate the problem. If a fault is intermittent, use of DTC charts may result in replacement of good parts.

- Most intermittent problems are caused by faulty electrical connections or wiring. Perform careful visual/physical check as described at start of "Symptoms," Section "6E2-B." Check for:
  - Poor mating of the connector halves. or terminal not fully seated in the connector body (backed out).
  - Improperly formed or damaged terminal. All connector terminals in the problem circuit should be carefully reformed or replaced to insure proper contact tension.
  - Poor terminal to wire connection. This requires removing the terminal from the connector body to check. Refer to SECTION 8 "Wiring Harness Service,"
- If a visual/physical check does not find the cause of the problem, the car can be driven with a voltmeter connected to a suspected circuit. A "Scan tool" can also be used to help detect intermittent conditions. An abnormal voltage, or "Scan" tool reading, when the problem occurs, indicates the problem may be in that circuit. If the wiring and connectors check OK, and a DTC was stored for a circuit having a sensor, except for DTC(s) 44 and 45, substitute a known good sensor and recheck.
- Loss of DTC memory. To check, disconnect throttle position (TP) sensor and idle engine until "Check Engine" malfunction indicator lamp comes "ON". DTC 21 should be stored, and kept in memory when ignition is turned "OFF". If not, the Engine Control Module (ECM) is faulty.
- An intermittent "Check Engine" malfunction indicator lamp with no stored DTC may be caused by:
  - Ignition coil shorted to ground and arcing at spark plug wires or plugs.
  - "Check Engine" malfunction indicator lamp wire to ECM shorted to ground.
  - Diagnostic "test" terminal wire to ECM, shorted to ground.
  - ECM grounds, refer to ECM wiring diagrams.
- Check for an electrical system interference caused by a defective relay, ECM driven solenoid, or switch. They can cause a sharp electrical surge. Normally, the problem will occur when the faulty component is operated.
- Check for improper installation of electrical options such as lights, 2 way radios, etc.
- Ignition control wires should be routed away from spark plug wires, electronic ignition (EI) wires, EI housing, coil and generator. Ground wire from ECM to EI should have a good connection.
- If problem has not been found, refer to "ECM Connector Symptom" charts at the end of "Symptoms," Section "6E2-B."

HARD START

Definition: Engine cranks OK, but does not start for a long time. Does eventually run, or may start but immediately dies.

PRELIMINARY CHECKS

- Perform the careful visual/physical checks as described at start of "Symptoms," Section "6E2-B".
- Make sure the driver is using the correct starting procedure.

SENSORS

- **CHECK:** Engine coolant temperature sensor using a "Scan tool", compare engine coolant temperature with ambient temperature on cold engine.
  - If engine coolant temperature readings is 5 degrees greater than or less than ambient air temperature on a cold engine, check resistance in engine coolant temperature sensor circuit or sensor itself. Compare engine coolant temperature sensor resistance value to the "Diagnostic Aids" chart on DTC 14 chart.
- **CHECK:** Manifold absolute pressure sensor. Check for flooding and/or correct sensor for vehicle.
- **CHECK:** TP sensor for binding or a high TP sensor voltage with the throttle closed (should read between 0.54 volt and 1.25 volts.)

FUEL SYSTEM

- **CHECK:** Fuel pump relay operation - pump should turn "ON" for 2 seconds when ignition is turned "ON". Use CHART A-5.
- **CHECK:** Fuel injectors are correct for the vehicle.
- **CHECK:** Fuel pressure, use CHART A-7.
- **CHECK:** Contaminated fuel.
- **CHECK:** Engine fuse (visual inspect).
- **CHECK:** A faulty in-tank fuel pump check valve will allow the fuel in the lines to drain back to the tank after engine is stopped. To check for this condition, perform fuel system diagnosis CHART A-7.

IGNITION SYSTEM

- **CHECK:** For proper ignition voltage output with spark tester J26792 or equivalent (ST-125).
- **CHECK:** Spark plugs. Remove spark plugs, check for wet plugs, cracks, wear, improper gap, burned electrodes, or heavy deposits. Repair or replace as necessary.
- **CHECK:** Bare or shorted wires.
- **CHECK:** Loose ignition coil ground.

ADDITIONAL CHECKS

- **CHECK:** Idle air control operation - use CHART C-2C.
- **CHECK:** Basic engine problem. Refer to ENGINE MECHANICAL DIAGNOSIS (SECTION 6A).
- **CHECK:** Service Bulletins for calibration updates.

SURGES AND/OR CHUGGLES

Definition: Engine power variation under steady throttle or cruise. Feels like the car speeds up and slows down with no change in the acceleration pedal.

PRELIMINARY CHECKS

- Perform the careful visual checks as described at start of "Symptoms," Section "6E2-B."
- Be sure driver understands transmission operation, and air conditioning compressor operation as explained in the owner's manual.

SENSORS

- **CHECK:** Heated oxygen sensor (HO2S). The HO2S should respond quickly to different throttle position, if it does not, check the HO2S for silicon or other contaminations from fuel, or use of improper RTV sealant. The sensor may have a white, powdery coating and result in a high but false signal voltage (rich heated HO2S signal indication). The engine control module will then reduce the amount of fuel delivered to the engine, causing a severe driveability problem. Also, watch for green glycol contamination or cracking.

FUEL SYSTEM

- **NOTICE:** To determine if the condition is caused by a rich or lean system, the car should be driven at the speed of the complaint. Monitoring block learn will help identify a problem.
  Lean - Block learn above 142. Refer to "Diagnostic Aids" on facing page of diagnostic trouble code 44.
  Rich - L.T. Fuel Trim above 118. Refer to "Diagnostic Aids" on facing page of diagnostic trouble code 45.
- **CHECK:** Fuel pressure while condition exists. Use CHART A-7.
- **CHECK:** In-line fuel filter. Replace if dirty or plugged.

IGNITION SYSTEM

- **CHECK:** For proper ignition voltage output using spark tester (ST-125) J26792 or equivalent .
- **CHECK:** Spark plugs. Remove spark plugs, check for wet plugs, cracks, wear, improper gap, burned electrodes, or heavy deposits. Repair or replace as necessary. Also, check condition of electronic ignition and spark plug wires.
- **CHECK:** Ignition timing. Using "Scan tool".

ADDITIONAL CHECKS

- **CHECK:** Engine control module grounds for being clean, tight and in their proper location.
- **CHECK:** Vacuum lines for kinks or leaks.
- **CHECK:** Exhaust gas recirculation - There should be no exhaust gas recirculation at idle. Refer to CHART C-7.
- **CHECK:** Generator output voltage. Repair if less than 9 or more than 16 volts.

LACK OF POWER, SLUGGISH OR SPONGY

Definition: Engine delivers less than expected power. Little or no increase in speed when accelerator pedal is pushed down part way.

PRELIMINARY CHECKS

- Perform the careful visual/physical checks as described at start of "Symptoms," Section "6E2-B."
- Compare customer's car to similar unit. Make sure the vehicle has an actual problem.
- Remove air filter and check air filter for dirt, or for being plugged. Replace as necessary.

FUEL SYSTEM

- **CHECK:** Rescricted fuel filter.
- **CHECK:** Fuel pressure, use CHART A-7.
- **CHECK:** Contaminated fuel.
- **CHECK:** Fuel injectors are correct for the vehicle.

IGNITION SYSTEM

- **CHECK:** Ignition timing, using "Scan tool".
- **CHECK:** Knock sensor system for excessive spark retard activity. Refer to CHART C-5. Use "Scan tool".
- **CHECK:** Secondary voltage using an oscilloscope or a spark tester J 26792 (ST-125), or equivalent, to check for a weak coil.

ADDITIONAL CHECKS

- **CHECK:** Engine control module grounds for being clean, tight and in their proper locations. See engine control module wiring diagrams.
- **CHECK:** Exhaust gas recirculation operation for being open or partly open all the time.
  - Refer to CHART C-7.
- **CHECK:** Generator output voltage. Repair if less than 9 or more than 16 volts.
- **CHECK:** Exhaust system for possible restriction. Refer to CHART B-1.
  - Inspect exhaust system for damaged or collapsed pipes.
  - Inspect muffler for heat damage or possible internal failure.
- **CHECK:** Torque converter clutch for proper operation. Refer to AUTOMATIC TRANSMISSION (SECTION 7A).

ENGINE MECHANICAL

- **CHECK:** Engine valve timing and compression.
- **CHECK:** Engine for correct or worn camshaft. Refer to ENGINE MECHANICAL DIAGNOSIS (SECTION 6A).

DETONATION/SPARK KNOCK

Definition: A mild to severe ping, usually worse under acceleration. The engine makes sharp metallic knocks that change with throttle opening. Sounds like popcorn popping.

PRELIMINARY CHECKS

- Perform the careful visual/physical checks as described at start of "Symptoms," Section "6E2-B."
- Park/Neutral position switch. Be sure "Scan tool" indicates drive with gear selector in drive or overdrive. Use CHART C-1A.
- If "Scan tool" readings are normal (see facing page of on-board diagnostic system check) and there are no engine mechanical faults, fill fuel tank with a gasoline that has a minimum octane reading of 87 and revaluate vehicle performance.
- **CHECK:** Exhaust gas recirculation system for not opening. Use CHART C-7.

COOLING SYSTEM

- Check for obvious overheating problems:
  - Low engine coolant.
  - Restricted air flow to radiator, or restricted water flow through radiator.
  - Correct engine coolant solution should be a 50/50 mix of anti-freeze engine coolant (or equivalent) and water.

FUEL SYSTEM

- **NOTICE:** To determine if the condition is caused by a rich or lean system, the car should be driven at the speed of the complaint. Monitoring L.T. Fuel Trim will help identify problem.
  Lean- L.T. Fuel Trim above 142. Refer to "Diagnostic Aids" on facing page of diagnostic trouble code 44.
  Rich - L.T. Fuel Trim below 118. Refer to "Diagnostic Aids" on facing page of diagnostic trouble code 45.
- **CHECK:** Fuel pressure, use CHART A-7.

IGNITION SYSTEM

- **CHECK:** Spark plugs for proper heat cause. Refer to Owner's Manual.
- **CHECK:** Ignition timing, using a "Scan tool".

ENGINE MECHANICAL

- **CHECK:** For excessive oil in the combustion chamber.
  - Valve oil seals for leaking.
- **CHECK:** Combustion chambers for excessive carbon build up. Remove carbon with top engine cleaner and follow instructions on can.
- **CHECK:** Combustion chamber pressure by performing a compression test. See ENGINE MECHANICAL DIAGNOSIS (SECTION 6A).
- **CHECK:** For incorrect basic engine parts such as cam, heads, pistons, etc.

HESITATION, SAG, STUMBLE

Definition: Momentary lack of response as the accelerator is pushed down. Can occur at all car speeds. Usually most severe when first trying to make the car move, as from a stop sign. May cause engine to stall if severe enough.

PRELIMINARY CHECKS

- Perform the careful visual/physical checks as described at start of "Symptoms," Section "6E2-B."

SENSORS

- **CHECK:** Throttle position sensor for binding or sticking. Voltage should increase at a steady rate as throttle is moved toward Wide Open Throttle.
- **CHECK:** Manifold absolute pressure sensor- use CHART C-1D.

FUEL SYSTEM

- **CHECK:** Fuel pressure, use CHART A-7.
- **CHECK:** Fuel injectors are correct for vehicle.
- **CHECK:** Contaminated fuel.
- **CHECK:** Evaporative emission canister purge system for proper operation. Refer to "Evaporative Emission Control System," Section "6E2-C3."

IGNITION SYSTEM

- **CHECK:** Spark plugs for being fouled, or for faulty secondary wiring.
- **CHECK:** Ignition timing, using a "Scan tool".
- **CHECK:** Ignition system ground.

ADDITIONAL CHECKS

- **CHECK:** Exhaust gas recirculation operation, use CHART C-7.
- **CHECK:** Engine thermostat functioning correctly and proper heat range.
- **CHECK:** Generator output voltage. Repair if less than 9 or more than 16 volts.

CUTS OUT, MISSES

Definition: Steady pulsation or jerking that follows engine speed, usually more pronounced as engine load increases, not normally felt above 1500 revolution per minute or 48 kph (30 mile per hour). The exhaust has a steady spitting sound at idle or low speed.

PRELIMINARY CHECKS

- Perform the careful visual/physical checks as described at start of "Symptoms," Section "6E2-B."

IGNITION SYSTEM

- Check for cylinder miss by:

1. Start engine, allow engine to stabilize then disconnect idle air control motor. Remove one spark plug wire at a time, using insulated pliers.

   CAUTION: Do not perform this test for more than 2 minutes, as this test may cause damage to the three way catalytic converter.

2. If there is a revolution per minute drop on all cylinders (equal to within 50 revolution per minute), go to "Rough, Unstable, or Incorrect Idle, Stalling" symptom. Reconnect idle air control valve.

3. If there is no revolution per minute (rpm) drop on one or more cylinders, or excessive variation is drop, check for spark on the suspected cylinder(s) using a shop oscilloscope or with J 26792 (ST-125) spark tester or equivalent. If no spark, refer to ENGINE ELECTRICAL (SECTION 6D) for intermittent operation of miss. If there is a spark, remove spark plug(s) in these cylinders and check for:
   - Insulator Cracks.
   - Wear.
   - Improper Gap.
   - Burned Electrodes.
   - Heavy Deposits.

- **CHECK:** Spark plug wires by connecting ohmmeter to ends of each wire in question. If meter reads over 30,000 ohms, replace wire(s).

FUEL SYSTEM

- **CHECK:** Fuel system - Plugged fuel filter, low pressure. Use CHART A-7.
- **CHECK:** Contaminated fuel.
- **CHECK:** Injector drivers. Disconnect all injector harness connectors. Connect J 34730-2 Injector Test Light or equivalent 6 volts test light between the harness terminal, of each injector connector and note light while cranking. If test light fails to blink at any connector, it is a faulty injector drive circuit harness, connector or terminal.

ENGINE MECHANICAL

- **CHECK:** Compression. Perform compression check on questionable cylinder(s) found above. If compression is low, repair as necessary. Refer to ENGINE MECHANICAL DIAGNOSIS (SECTION 6A).
- **CHECK:** Engine parts. Remove cam covers. Check for broken valve springs, worn camshaft lobes and valve timing. Repair as necessary. See ENGINE MECHANICAL DIAGNOSIS (SECTION 6A).

ADDITIONAL CHECKS

- **CHECK:** For electromagnetic interference (EMI). A missing condition can be caused by EMI on the reference circuit. EMI can usually be detected by monitoring engine speed with a "Scan tool". A sudden increase in rpm with little change in actual engine speed change, indicates EMI is present. If the problem exists, check routing of secondary wires, check distributor ground circuit.
- **CHECK:** Intake and exhaust manifold passage for casting flash.

ROUGH, UNSTABLE, OR INCORRECT IDLE, STALLING

Definition: Engine runs unevenly at idle. If severe, the engine or car may shake. Engine idle speed may vary in rpm. Either condition may be severe enough to stall engine.

PRELIMINARY CHECKS

- Perform the careful visual/physical checks as described at start of "Symptoms," Section "6E3-B."
- **CHECK:** For vacuum leaks
- **CHECK:** Engine control module (ECM) grounds for being clean, tight and proper routing. See ECM wiring diagrams.

FUEL SYSTEM

- **NOTICE:** Monitoring L.T. Fuel Trim will help identify the cause of the problem. If the system is running lean (L.T. Fuel Trim greater than 142), refer to "Diagnostic Aids" on facing page of diagnostic trouble code 44.
  If the system is running rich (L.T. Fuel Trim less than 118), refer to "Diagnostic Aids" on facing page of diagnostic trouble code 45.
- **CHECK:** Incorrect minimum idle speed may be caused by foreign material accumulation in the throttle bore coking, on the throttle body or on the throttle shaft.
- **CHECK:** Clean injectors.
- **CHECK:** For fuel in fuel pressure control valve hose. If fuel is present, replace regulator assembly.
- **CHECK:** Evaporative Emission Control System, refer to "Evaporative Emission Control System," Section "6E2-C3".
- **CHECK:** The Heated oxygen sensor should respond quickly to different throttle position, if it does not, check the heated oxygen sensor for silicon contaminations from fuel, or use of improper RTV sealant. The sensor will have a white, powdery coating and will result in a high but false signal voltage (rich heated oxygen sensor signal indication). The ECM will then reduce the amount of fuel delivered to the engine, causing a severe driveability problem.

IGNITION SYSTEM

- **CHECK:** Ignition timing, using a "Scan tool".
- **CHECK:** Ignition system; wires, plugs, electronic ignition, etc.

ENGINE MECHANICAL

- **CHECK:** Perform a cylinder compression check. See ENGINE MECHANICAL DIAGNOSIS (SECTION 6).
- **CHECK:** For correct camshaft or weak valve springs.

ADDITIONAL CHECKS

- **CHECK:** Manifold absolute pressure sensor. Refer to CHART C-10.
- **CHECK:** Throttle linkage for sticking or binding.
- **CHECK:** Park/neutral position switch circuit. See CHART C-1A, or use "Scan tool" and be sure tool indicates vehicle is in drive with gear selector in drive or overdrive.
- **CHECK:** Idle air control operation, use CHART C-2C.
- **CHECK:** Exhaust gas recirculation valve. There should be no exhaust gas recirculation at idle. Refer to CHART C-7A.
- **CHECK:** Air conditioning (A/C) signal to engine control module, "Scan tool" should indicate A/C is being requested when ever A/C is selected. If problem exists with A/C "ON," check A/C system operation CHART C-10.
- **CHECK:** Positive crankcase ventilation valve for proper operation. Refer to "Positive Crankcase Ventilation (PCV)," Section "6E2-C13."
- **CHECK:** For broken motor mounts.
- **CHECK:** Generator output voltage. Repair if less than 9 or more than 16 volts.

POOR FUEL ECONOMY

Definition: Fuel economy, as measured by an actual road test, is noticeably lower than expected. Also, fuel economy is noticeably lower than it was on this car at one time, as previously shown by an actual road test.

PRELIMINARY CHECKS

- Perform the careful visual checks as described at start of "Symptoms," Section "6E2-B."
- Visually (physically) check: Vacuum hoses for splits, kinks, and proper connections as shown on "Vehicle Emission Control Information" label.
- Check owner's driving habits.
  - Is A/C "ON" full time (Defroster mode "ON")?
  - Are tires at correct pressure?
  - Are excessively heavy loads being carried?
  - Is acceleration too much, too often?
- Check air cleaner filter for dirty or being plugged.

IGNITION SYSTEM

- **CHECK:** Ignition timing. Refer to "Vehicle Emission Control Information" label.
- **CHECK:** Spark plugs. Remove spark plugs, check for wet plugs, cracks, wear, improper gap, burned electrodes, or heavy deposits. Repair or replace as necessary.

COOLING SYSTEM

- **CHECK:** Engine coolant level.
- **CHECK:** Engine thermostat for faulty part (always open) or for wrong heat range. Refer to ENGINE COOLING (SECTION 6B).

ENGINE MECHANICAL

- **CHECK:** Compression. See ENGINE MECHANICAL DIAGNOSIS (SECTION 6A).

ADDITION CHECKS

- **CHECK:** TCC operation (A/T). Use CHART C-8. A "Scan tool" should indicate a revolution per minute drop, when the TCC is commanded "ON".
- **CHECK:** For exhaust system restriction.
- **CHECK:** For proper calibration of speedometer.
- **CHECK:** Induction system and crankcase for air leaks.
- **CHECK:** Fuel injectors are correct for the vehicle.

EXCESSIVE EXHAUST EMISSIONS OR ODORS

Definition: Vehicle fails an emission test. Vehicle has excessive "rotten egg" smell. Excessive odors do not necessarily indicate excessive emissions.

PRELIMINARY CHECKS

- Perform on-board diagnostic system check.
- IF EMISSION TEST shows excessive CO and hydrocarbon check items which cause car to run RICH (Long Term Fuel Trim less than 118), refer to "Diagnostic Aids" on facing page of diagnostic trouble code (DTC) 45.
- If EMISSION TEST shows excessive NOx, check items which cause car to run lean or too hot.

COOLING SYSTEM

- If the "Scan tool" indicates a very high engine coolant temperature and the system is running lean:
  - CHECK: Engine coolant level
  - CHECK: Engine thermostat for faulty part (always open) or for wrong heat range. Refer to ENGINE COOLING (SECTION 6B).
  - CHECK: Cooling fan operation.

FUEL SYSTEM

- **NOTICE:** If the system is running rich (L.T. Fuel Trim near 118), refer to "Diagnostic Aids" on facing page of DTC 45.
  - If the system is running lean (L.T. Fuel Trim near 142) refer to "Diagnostic Aids" on facing page of DTC 44.
- **CHECK:** For properly installed fuel cap.
- **CHECK:** Fuel pressure. Use CHART A-7.
- **CHECK:** Canister for fuel loading. Refer to "Evaporative Emission Control System," Section "6E2-C3."

IGNITION SYSTEM

- **CHECK:** Ignition timing. Refer to "Vehicle Emission Control Information" label.
- **CHECK:** Spark plugs, plug wires, and ignition components. Refer to ENGINE ELECTRICAL (SECTION 6D).

ADDITIONAL CHECKS

- **CHECK:** For vacuum leaks.
- **CHECK:** Exhaust gas recirculation valve for not opening. Use CHART C-7.
- **CHECK:** For lead contamination of three way catalytic converter (look for the removal of fuel filler neck restrictor).
- **CHECK:** Carbon build-up. Remove carbon with top engine cleaner. Follow instructions on can.
- **CHECK:** PCV valve for being plugged, stuck or blocked PCV hose or fuel in the crankcase.

BACKFIRE

Definition: Fuel ignites in intake manifold, or in exhaust system, making loud popping noise.

PRELIMINARY CHECKS

- Perform the careful visual/physical checks as described at start of "Symptoms," Section "6E2-B."

IGNITION SYSTEM

- **CHECK:** Proper ignition coil output voltage with spark tester J26792 or equivalent (ST-125).
- **CHECK:** Spark plugs. Remove spark plugs, check for wet plugs, cracks, wear, improper gap, burned electrodes, or heavy deposits. Repair or replace as necessary.
- **CHECK:** Spark plug wires for crossfire, also inspect electronic ignition, spark plug wires, and proper routing of plug wires.
- **CHECK:** Ignition timing. Refer to "Vehicle Emission Control Information" label.
- **CHECK:** If an intermittent condition exists in the ignition system, see "Ignition System/ IGNITION CONTROL," Section "6E2-C4" or ENGINE ELECTRICAL (SECTION 6D).

ENGINE MECHANICAL

- **CHECK:** Compression - Look for sticking or leaking valves.
- **CHECK:** Valve timing, refer to ENGINE MECHANICAL DIAGNOSIS (SECTION 6A).
- **CHECK:** Intake and exhaust manifold passages for casting flash.

FUEL SYSTEM

- **CHECK:** Perform fuel system diagnosis check, see CHART A-7.

ADDITIONAL CHECKS

- **CHECK:** Exhaust gas recirculation (EGR) gasket for faulty or loose fit.
- **CHECK:** EGR operation for being open all the time. Refer to "EGR," CHART C-7.
- **CHECK:** Intake and exhaust manifold for casting flash.

DIESELING, RUN-ON

Definition: Engine continues to run after key is turned "OFF", but runs very roughly. If engine runs smoothly, check ignition switch and adjustment.

PRELIMINARY CHECKS

- Perform the careful visual/physical checks as described at start of "Symptoms," Section "6E2-B."

FUEL SYSTEM

- **CHECK:** Injectors for leaking. Refer to "Fuel System Diagnosis" CHART A-7.

CHART B-1

RESTRICTED EXHAUST SYSTEM CHECK

Proper Diagnosis for a restricted exhaust system is essential before any components are replaced.

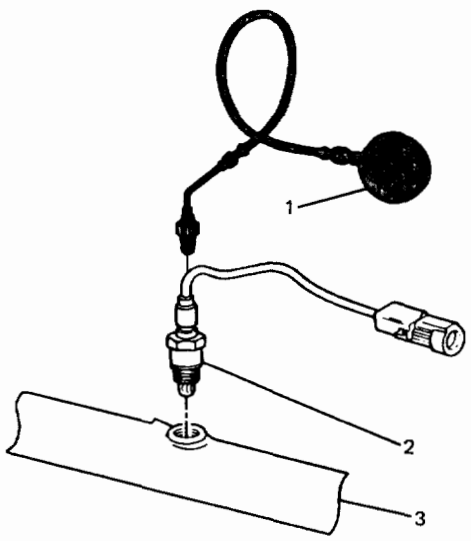

1 BACK PRESSURE GAGE
2 HEATED OXYGEN SENSOR
3 EXHAUST PIPE

Fig. 6E2-49

DIAGNOSIS:

1. With the engine idling at normal operating temperature, observe the exhaust system back pressure reading on the gage. Reading should not exceed 7.8 kPa (1.13 psi).
2. Increase engine speed to 2000 revolution per minute and observe gage. Reading should not exceed 14.6 kPa (2.11 psi).
3. If the backpressure at either speed exceeds specification, a restricted exhaust system is indicated.
4. Inspect the entire exhaust system for a collapsed pipe, heat distress, or possible internal muffler failure.
5. If there are no obvious reasons for the excessive back pressure, the three way catalytic converter is suspected to be restricted and should be replaced.

SECTION C

COMPONENTS SYSTEMS

CAUTION
When fasteners are removed, always reinstall them at the same location from which they were removed. If a fastener needs to be replaced, use the correct part number fastener for that application. If the correct part number fastener is not available, a fastener of equal size and strength (or stronger) may be used. Fasteners that are not reused, and those requiring thread locking compound will be called out. The correct torque value must be used when installing fasteners that require it. If the above conditions are not followed, parts or system damage could result.

Section "C" provides information on the following:
- General description of components and sub-systems.
- On-vehicle service.
- Part names and group numbers.
- Diagnostic charts. These include a functional check of the system as well as diagnosis of any problem found in the functional check.

For locations of components, wiring diagrams, and engine control module terminal and view, refer to the front of "Engine Components/Wiring Diagrams/Diagnostic Charts", Section "A".
Refer to the following sections for the appropriate sub-system information:

- C1 Engine Control Module (ECM) and Sensors . . . . . Page 6E2—100
- C2 Fuel Metering System . . . . . Page 6E2—116
- C3 Evaporative Emission (EVAP) Control System . . . . . Page 6E2—134
- C4 Electronic Ignition (EI) System/Ignition Control (IC) . . . . . Page 6E2—138
- C5 Knock Sensor (KS) System . . . . . Page 6E2—146
- C7 Exhaust Gas Recirculation (EGR) System . . . . . Page 6E2—151
- C8 Shift Indicator Light (M/T Only) . . . . . Page 6E2—157
- C10 Air Conditioning (A/C) Compressor Clutch Control System . . . . . Page 6E2—161
- C13 Positive Crankcase Ventilation (PCV) . . . . . Page 6E2—164

DIAGNOSTIC CHARTS

The following diagnostic charts can be found at the end of some of the sections.

- Chart C-1A Park/neutral Position (PNP) Switch Diagnosis (Auto Transmission only) . . . . Page 6E2—108
- Chart C-1D Manifold Absolute Pressure (MAP) Output Check . . . . . Page 6E2—110
- Chart C-1E Power Steering Pressure (PSP) Switch Diagnosis . . . . . Page 6E2—112
- Chart C-1F Heated Oxygen Sensor (HO2S) Heater Check . . . . . Page 6E2—114
- Chart C-2A Injector Balance Test . . . . . Page 6E2—128
- Chart C-2C Idle Air Control (IAC) System Check . . . . . Page 6E2—130
- Chart C-2D Induction Air Control System Check (DOHC Only) . . . . . Page 6E2—132
- Chart C-3 Evaporate Emission Canister Purge Valve Check . . . . . Page 6E2—136
- Chart C-4D-1 Electronic Ignition (EI) Misfire at Idle . . . . . Page 6E2—142
- Chart C-4D-2 Electronic Ignition (EI) Misfire Under Load . . . . . Page 6E2—144
- Chart C-5 Knock Sensor (KS) System Check . . . . . Page 6E2—148
- Chart C-7A Exhaust Gas Recirculation (EGR) System Check . . . . . Page 6E2—154
- Chart C-8 Manual Transmission (M/T) Shift Light Check . . . . . Page 6E2—158
- Chart C-10 Air Conditioning (A/C) System Functional Check . . . . . Page 6E2—162

SECTION C1

ENGINE CONTROL MODULE (ECM) & SENSORS

CONTENTS

General Description . . . . . 6E2—100
Engine Control Module (ECM) . . . . . 6E2—100
Engine Control Module (ECM) Function . . . . . 6E2—100
Information Sensors . . . . . 6E2—101
Engine Coolant Temperature (ECT) Sensor . . . 6E2—101
Intake Air Temperature (IAT) Sensor . . . . . 6E2—101
Heated Oxygen Sensor (HO2S) . . . . . 6E2—101
Throttle Position (TP) Sensor . . . . . 6E2—102
Manifold Absolute Pressure (MAP) Sensor . . . 6E2—102
Vehicle Speed Sensor (VSS) . . . . . 6E2—102
Knock Sensor (KS) (DOHC ONLY) . . . . . 6E2—102
Air Conditioning (A/C) Request Signal . . . . . 6E2—102
Power Steering Pressure (PSP) Switch . . . . . 6E2—102
Park/Neutral Position (PNP) Switch (Auto only) . . . . . 6E2—103
Diagnosis . . . . . 6E2—103
Engine Control Module (ECM) . . . . . 6E2—103
Electrically Erasable Programmable Read Only Memory . . . . . 6E2—103
Engine Control Module (ECM) Inputs . . . . . 6E2—103
Engine Coolant Temperature (ECT) Sensor . . . 6E2—104
Intake Air Temperature (IAT) Sensor . . . . . 6E2—104
Heated Oxygen Sensor (HO2S) . . . . . 6E2—104
Throttle Position (TP) Sensor . . . . . 6E2—104
Manifold Absolute Pressure (MAP) Sensor . . . 6E2—104
Vehicle Speed Sensor (VSS) . . . . . 6E2—104
Air Conditioning (A/C) Request Signal . . . . . 6E2—104
Power Steering Pressure (PSP) Switch . . . . . 6E2—104
Crankshaft Position (CKP) Reference Signal . . 6E2—104
Park/Neutral Position (PNP) Switch . . . . . 6E2—104
Knock Sensor (KS) . . . . . 6E2—104
On-Vehicle Service . . . . . 6E2—104
Engine Control Module (ECM) . . . . . 6E2—104
Engine Control Module (ECM) Replacement . . 6E2—105
Engine Coolant Temperature (ECT) Sensor . . . . 6E2—105
Intake Air Temperature (IAT) Sensor . . . . . 6E2—106
Heated Oxygen Sensor (HO2S) . . . . . 6E2—106
Throttle Position (TP) Sensor . . . . . 6E2—107
Manifold Absolute Pressure (MAP) Sensor . . . . . 6E2—107
Vehicle Speed Sensor (VSS) . . . . . 6E2—107
Power Steering Pressure (PSP) Switch . . . . . 6E2—107
Park/Neutral Position (PNP) Switch . . . . . 6E2—107
Chart C-1A Park/Neutral Position (PNP) Switch Diagnosis . . . . . 6E2—108
Chart C-1D Manifold Absolute Pressure (MAP) Output Check . . . . . 6E2—110
Chart C-1E Power Steering Pressure (PSP) Switch Diagnosis . . . . . 6E2—112
Chart C-1F Heated Oxygen Sensor (HO2S) Heater Check . . . . . 6E2—114

GENERAL DESCRIPTION

ENGINE CONTROL MODULE (ECM)

The Engine Control Module (ECM) (Fig. 6E2-50), located under the instrument panel, is the control center of the fuel injection system. If constantly looks at the information from various sensors, and controls the systems that affect vehicle performance. The ECM also performs the diagnostic function of the system. It can recognize operational problems, alert the driver through the "Check Engine" malfunction indicator lamp, and store a diagnostic trouble code or diagnostic trouble codes which identify the problem areas to aid the technician in making repairs. See "Introduction" Section "6E2" for more information on using the diagnostic function of the ECM.

For service, this ECM is replaced as a complete unit. There are no serviceable parts in the ECM. The calibrations are stored in the ECM in the Electronic Erasable Programmable Read Only Memory (EEPROM).

ENGINE CONTROL MODULE (ECM) FUNCTION

This ECM supplies either 5 to 12 volts to power various sensors or switches. This is done through resistances in the ECM which are so high in value that a test light

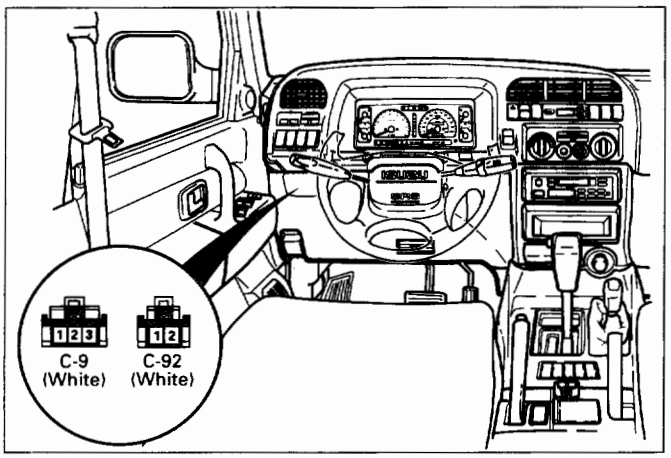

Fig. 6E2-50

will not light when connected to the circuit. In some cases, even an ordinary shop voltmeter will not give an accurate reading because its resistance is too low. Therefore, a 10 megohms input impedance digital voltmeter is required to assure accurate voltage readings.

The Engine Control Module (ECM) controls output circuits such as the fuel injectors, idle air control valve, air conditioning clutch relay, etc. by controlling the ground circuit through transistors or a device called a "quad-driver".

INFORMATION SENSORS

Engine Coolant Temperature (ECT) Sensor (Fig. 6E2-51)

The Engine Coolant Temperature (ECT) Sensor is a thermistor (a resistor which changes value based on temperature) mounted in the engine coolant stream. Low ECT produces a high resistance (100,000 ohms at —40°C/—40°F) while high temperature causes low resistance (70 ohms at 130°C/266°F).

The ECM supplies a 5-volts signal to the ECT sensor through a resistor in the ECM and measures the voltage. The voltage will be high when the engine is cold, and low when the engine is hot.

By measuring the voltage, the ECM knows the ETC. ECT affects most systems the ECM controls.

A failure in the ECT sensor circuit should set a Diagnostic Trouble Code (DTC) 14. Remember, these DTC(s) indicate a failure in the ETC circuit, so proper use of the chart will lead to either repairing a wiring problem or replacing the sensor, to properly repair a problem.

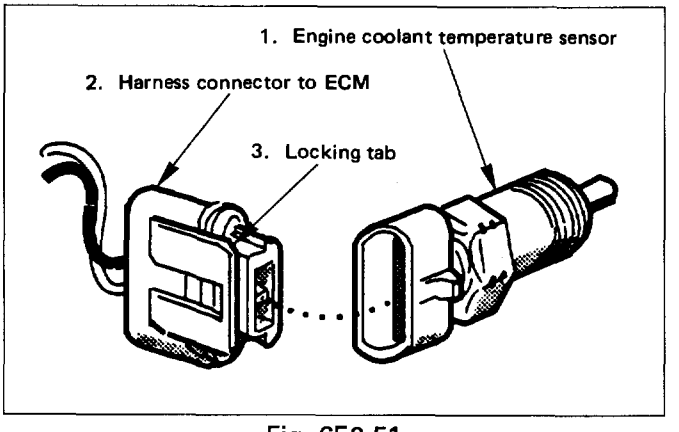

Fig. 6E2-51

Intake Air Temperature (IAT) Sensor

The Intake Air Temperature (IAT) sensor is a thermistor, a resistor which changes value based on the temperature of air entering the engine. Low temperature produces a high resistance (100,000 ohms at —40°C/—40°F), while high temperature causes low resistance (70 ohms at 130°C/266°F).

The ECM supplies a 5-volts signal to the sensor through a resistor in the ECM and measures the voltage. The voltage will be high when the intake air is cold, and low when the air is hot. By measuring the voltage, the ECM knows the IAT.

The IAT sensor is also used to control spark timing and delays exhaust gas recirculation when intake air is cold.

A failure in the IAT sensor circuit should set a DTC 23.

Heated Oxygen Sensor (HO2S) (Fig. 6E2-52)

The Heated Oxygen Sensor (HO2S) is mounted in the exhaust system where it can monitor the Oxygen (O2) content of the exhaust gas stream. The O2 content in the exhaust reacts with the sensor to produce a voltage output. This voltage ranges from approximately .1 volt (high O2-lean mixture) to .9 volt (low O2-rich mixture). This voltage can be measured with a digital voltmeter having at least 10 megohms input impedance. Use of standard shop type voltmeters will result in very inaccurate readings.

By monitoring the voltage output of the HO2S, the ECM will know what fuel mixture command to give to the injector (lean mixture-low O2 voltage = rich command, rich mixture-high O2 voltage = lean command).

The HO2S circuit, if open, should set a DTC 13. A constant low voltage in the sensor circuit should set a DTC 44. While a constant high voltage in the circuit should set a DTC 45. DTC(s) 44 and 45 could also be set as a result of fuel system problems. See DTC charts for conditions that can cause a lean or rich system.

The HO2S works in the same manner as the non-HO2S The exception is that battery positive voltage is supplied to a heating unit that is part of the sensor itself. This heater receives voltage from the ECM's main relay circuit.

The heater helps to heat up the HO2S so the ECM can start controlling the fuel injection sooner for better fuel emissions. There are no malfunction DTC(s) to detect if the heater part of the sensor is working. To check the heater, refer to "Functional Check" in this section.

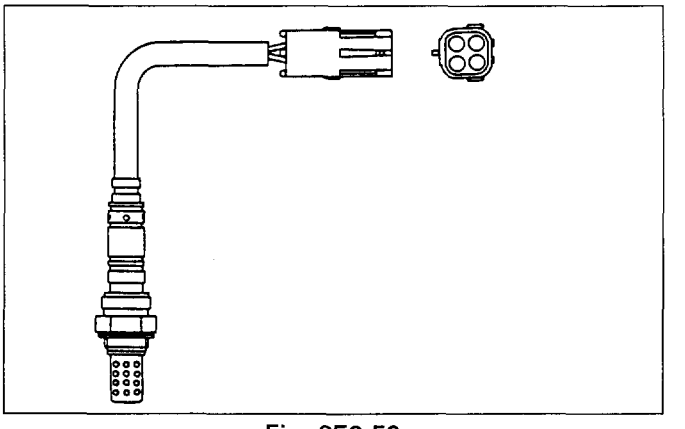

Fig. 6E2-52

Throttle Position (TP) Sensor (Fig. 6E2-53)

The Throttle Position (TP) Sensor is a potentiometer connected to the throttle shaft on the Throttle Body (TB). The TP sensor electrical circuit consists of a 5 volts supply line (signal line) and a ground line, provided by the Engine Control Module (ECM). By monitoring the voltage on the signal line the ECM calculates throttle position. As the TB angle is changed (accelerator pedal moved), the output of TP sensor also changes. At a closed throttle position, the output of the TP sensor is low (approximately 5 volt). As the TB opens, the output increases so that, at wide-open throttle, the output voltage will be between 4 and 5 volts.

The ECM can determine fuel delivery based on TB angle (driver demand). A broken or loose TP sensor can cause intermittent bursts of fuel from the injector, and an unstable idle, because the ECM thinks the throttle is moving. A problem in any of the TP sensor circuits should set a diagnostic trouble code (DTC) 21. Once a DTC is set, the ECM will use an artificial default value for TP sensor. A high idle will result when DTC 21 is set.

See "On-Vehicle Service" for replacement or adjustment of TP sensor.

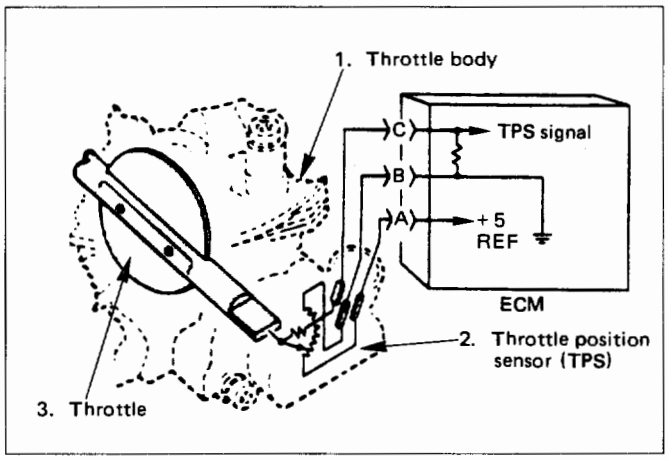

Fig. 6E2-53

Manifold Absolute Pressure (MAP) Sensor (Fig. 6E2-54)

The Manifold Absolute Pressure (MAP) sensor measures the changes in the intake manifold pressure which result from engine load and speed changes, and converts this to a voltage output.

A closed throttle on engine coast down would produce a relatively low MAP output, while a Wide Open Throttle would produce a high output. MAP is the OPPOSITE of what would be measured on a vacuum gage. When manifold pressure is high, vacuum is low.

The MAP sensor is also used to measure barometric pressure under contain conditions, which allows the ECM to automatically adjust for different altitudes. The ECM sends a 5 volts reference signal to the MAP sensor. As the manifold pressure changes, the electrical resistance of the sensor also changes. By monitoring the sensor output voltage, the ECM knows the manifold pressure.

A higher pressure, low vacuum (high voltage) requires more fuel, while a lower pressure, higher vacuum (low voltage) requires less fuel.

A failure in the MAP sensor circuit should set a DTC 33.

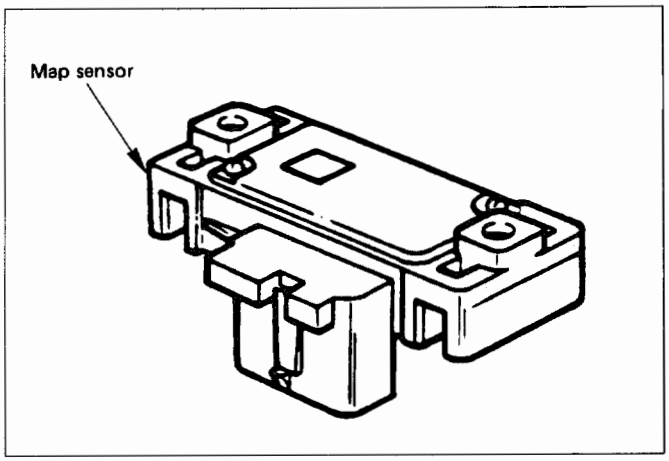

Fig. 6E2-54

Vehicle Speed Sensor (VSS)

The Vehicle Speed Sensor, sends a pulsing voltage signal to the ECM, which the ECM converts to miles per hour. This sensor helps to control the operation of the idle air control system.

See ELECTRICAL DIAGNOSIS (SECTION 8A) for more information.

Knock Sensor (KS) (DOHC only)

The Knock Sensor is mounted in the engine block. When abnormal engine vibrations (spark knock) are present, the sensor produces a voltage signal, which is sent to the knock sensor module.

See "Knock Sensor System," Section "6E2-C5" for further information on the knock sensor system.

Air Conditioning (A/C) Request Signal

This signal tells the ECM that the Air Conditioning (A/C) selector switch is turned "ON". The ECM uses this to adjust the idle speed, before turning "ON" the A/C clutch.

If this signal is not available to the ECM, the A/C compressor will be inoperative.

See "A/C Compressor Clutch Control System", Section "6E2-C10" for A/C wiring diagrams and diagnosis of A/C electrical system.

Power Steering Pressure (PSP) Switch

This switch tells the ECM that the vehicle is in a parking maneuver. The ECM uses this information to compensate for the additional engine load by moving the idle air control valve. The ECM will also turn "OFF" the A/C clutch when high pressure is detected.

Park/Neutral Position (PNP) Switch (Auto Only)
The Park/Neutral position (PNP) switch indicates to the Engine Control Module (ECM) when the transmission is in park, neutral or drive. This information is used for the exhaust gas recirculation, and the idle air control valve operation.

NOTE:
- Vehicle should not be driven with PNP switch disconnected, as idle quality will be affected and a possible false diagnostic trouble code (DTC) 24 (vehicle speed sensor).

See DIAGNOSIS AND GENERAL SERVICE Section for more information on the PNP switch. The PNP switch is part of the neutral/start and backup light switch assembly mounted on the transmission. See CHART C-1A for PNP switch check.

DIAGNOSIS

To read the DTC(s), use a "Scan tool" or ground the diagnostic test terminal, with the engine not running and the ignition "ON". The "Check Engine" malfunction indicator lamp will flash DTC 12 three times and then flash each DTC stored in memory three times. All DTC(s) stored in memory will have been read when DTC 12 is flashed again.
No new DTC(s) can be stored when in the diagnostics test mode (diagnostics lead grounded). This eliminates confusion while the system is being serviced.
To clear the DTC(s) from memory:
- Ignition "OFF".
- Disconnect main fuse located in the under hood fuse/relay center near the battery.

Since the ECM can have a failure which may affect only one circuit, following the diagnostic procedures in this section will determine which circuit has a problem and where it is.
If a diagnostic chart indicates that the ECM connections or ECM is the cause of a problem, and the ECM is replaced, but does not correct the problem, one of the following may be the reason.
- **There is a problem with the ECM terminal connections** — The diagnostic chart will say ECM connections or ECM. The terminals may have to be removed from the connector in order to check them properly.
- **The ECM is not correct for the Vehicle** — Ane incorrect ECM may cause a malfunction and may set a DTC.
- **The problem is intermittent** — This means that the problem is not present at the time the system is being checked. In this case, refer to the "Symptoms" portion of the manual and make a careful physical inspection of all portions of the system involved.
- **Shorted solenoid, relay coil, or harness** — Solenoid and relays are turned "ON" and "OFF" by the ECM, using internal electronic switches called "drivers". Each driver is part of a group of four, called "quad-drivers". Failure of one driver can damage any other driver in the set.

A shorted solenoid, relay coil, or harness in a I-EFT-SHCI computer will not damage the ECM, but will cause the circuit and controlled component to be inoperative. When the circuit fault is not present or has been repaired, the "quad-driver" will again operate in a normal manner due to its fault protected design. If a fault has been repaired in a circuit controlled by a "quad-driver", the original ECM should be reinstalled and the circuit checked for proper operation. ECM replacement will not be necessary if the repaired circuit or component now operates correctly.
J 34636 or BT-8405 testers or equivalent provide a fast, accurate means of checking for a shorted coil or a short to battery positive voltage.
- **The replacement ECM may be faulty** — After the ECM is replaced, the system should be re-checked for proper operation. If the diagnostic chart again indicates the ECM is the problem, substitute a known good ECM. Although this is a rare condition, it could happen.

ENGINE CONTROL MODULE (ECM)
A faulty ECM will be determined in the diagnostic charts.

ELECTRONICALLY ERASABLE PROGRAMMABLE READ ONLY MEMORY
A faulty electrically erasable programmable read only memory, which is part of the ECM, will set a DTC 51.

ENGINE CONTROL MODULE (ECM) INPUTS
All of the sensors and input switches can be diagnosed by the use of "Scan tool".
Following is a short description of how the sensors and switches can be diagnosed by the use "Scan tool". The "Scan tool" can also be used to compare the values for a normal running engine with the engine you're diagnosing.

Engine Coolant Temperature (ECT) Sensor

A "Scan tool" displays engine temperature in degrees centigrade. After engine is started, the temperature should rise steadily to about 90°C then stabilize when thermostat opens. If the engine has not been run for several hours (overnight), the engine coolant temperature (ECT) and intake air temperature (IAT) readings should be close to each other. A fault in the ECT sensor circuit should set a diagnostic trouble code (DTC) 14. The DTC charts also contain a chart to check for sensor resistance values relative to temperature.

Intake Air Temperature (IAT) Sensor

A "Scan tool" displays temperature of the air entering the engine and should read close to ambient air temperature when engine is cold, and rise as under hood temperature increases. If the engine has not been run for several hours (overnight), the IAT sensor temperature and ECT readings should be close to each other. A failure in the IAT sensor circuit should set a DTC 23. The DTC charts also contain a chart to check for sensor resistance values relative to temperature.

Heated Oxygen Sensor (HO2S)

The "Scan tool" has several positions that will indicate the state of the exhaust gases, Oxygen voltage, integrator, and block learn. See "Scan tool" position information in "Introduction", "Driveability and Emission," in this section.

A problem in the oxygen sensor circuit, or fuel system, should set a DTC 13 (open circuit), DTC 44 (lean indication)/DTC 45 (rich indication). Refer to applicable chart, if any of these DTC(s) were stored in memory.

Throttle Position (TP) Sensor

A "Scan tool" displays throttle position in volts. On 3.2L engine, Throttle position (TP) sensor voltage should read below 0.85 volts, with throttle closed and ignition "ON", or at idle. Voltage should increase at a steady rate as throttle is moved toward wide open throttle.

The Engine Control Module (ECM) has the ability to auto-zero the TP sensor voltage if it is below about 0.85 volts. This means that any voltage less than 0.85 volts will be determined by the ECM to be 0% throttle.

Some "Scan tools" have the ability to read the throttle angle and should read 0%, when the throttle is closed.

A failure in the TP sensor or circuit should set a DTC 21.

Manifold Absolute Pressure (MAP) Sensor

"Scan tool" displays manifold pressure in volts. Low pressure (high vacuum) reads a low voltage, while a high pressure (low vacuum) reads a high voltage. A failure in the Manifold Absolute Pressure (MAP) sensor circuit should set a DTC 33 and using the chart will find the cause of the problem. A DTC 33 may be set if a rough or unstable idle exists. CHART C-1D can also be used to check MAP sensor.

Vehicle Speed Sensor (VSS)

A "Scan tool" reading should closely match with speedometer reading with drive wheels turning. A failure in the vehicle speed sensor circuit should set a DTC 24.

AIR CONDITIONING (A/C) Request Signal

When air conditioning in "ON", the "Scan tool" should indicate air conditioning "ON".

See "Air Conditioning Compressor Clutch Control System", Section "6E2-C10" for A/C electrical system diagnosis.

Power Steering Pressure (PSP) Switch

A "Scan tool" should read "OFF" normally, and "ON" with high pressure. This reading may vary with different "Scan tools". Refer to CHART C-1E for power steering pressure switch diagnosis.

Crankshaft Position (CKP) Reference Signal

The ignition control module sends a signal to the ECM, which is used to calculate proper spark advance and fuel delivery. A "Scan tool" will read this signal and is displayed in revolution per minute. See "Electronic Ignition System", Section "6E2-C-4" for more information on the ignition system (ignition control).

Park/Neutral Position (PNP) Switch

A "Scan tool" should read park/neutral position when in park, or neutral, and R-D, L, when in drive or overdrive. This reading may vary with different makes of tools. Refer to CHART C-1A for park/neutral position switch diagnosis.

Knock Sensor (KS)

A "Scan tool" will indicate when the knock sensor module signals the ECM that knock is present. See "Knock Sensor System," Section "6E2-C5" for further information on the knock sensor system.

ON-VEHICLE SERVICE

ENGINE CONTROL MODULE (ECM)

The ECM is programmed from the factory and has no replaceable calibration chip.

CAUTION:
- When replacing the production Engine Control Module (ECM) with a service ECM (controller), it is important to transfer the broadcast diagnostic trouble code and production ECM number to the service ECM label. Please do not record on ECM cover. This will allow positive identification of ECM parts throughout the service life of the vehicle.

CAUTION:
- To prevent internal ECM damage, the ignition must be "OFF" when disconnecting or reconnecting power to ECM (for example; battery cable, ECM pigtail, ECM fuse, jumper cables etc.)

ENGINE CONTROL MODULE (ECM) REPLACEMENT

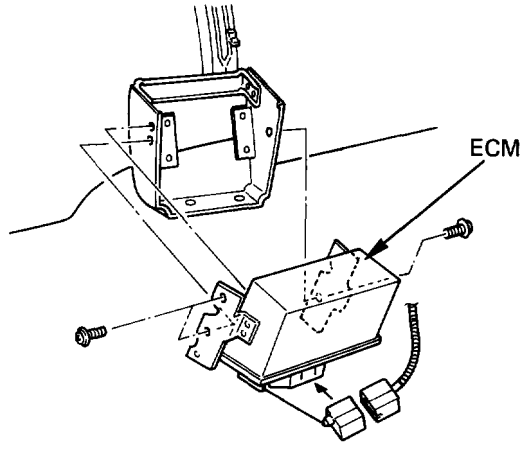

Removal steps
1. Negative battery cable
2. Lower trim panel at console
3. A/C Heater transfer tube
4. ABS controller electrical controller
5. ABS controller
6. Four fasteners for ECM bracket
7. ECM electrical connectors
8. ECM from under dash bracket still attached

Installation steps
To install, follow the removal steps reverse in the order.

Fig. 6E2-55

REMOVAL

1. **Negative battery cable**
2. **Lower trim panel at console (4 fasteners)**
3. **Air Conditioning Heater transfer tube**
4. **ABS controller electrical connector (1) (if equipt)**
5. **ABS controller (4 fasteners) (if equipt)**
6. **Four (4) fasteners for ECM bracket**
7. **ECM electrical connectors (2)**
8. **ECM from under dash, bracket still attached**

NOTE:
To prevent possible Electronic Discharge damage to the ECM, Do not touch the connector pins or soldered components on the circuit board.

INSTALLATION

1. **ECM and bracket under dash**
2. **Four (4) fasteners and tighten**
3. **Two (2) ECM electrical connectors**
4. **ABS controller and four (4) fasteners (if equipt)**
5. **ABS controller electrical connector (if equipt)**
6. **Air Conditioning Heater transfer tube**
7. **Lower trim panel at console (4 fasteners)**
8. **Negative battery cable**

Functional Check
1. Turn ignition "ON".
2. Enter diagnostics test mode.
   A. Allow Diagnostic Trouble Code (DTC) 12 to flash four times to verify no other DTC(s) are present. This indicates the reprogrammed ECM is functioning properly.
   B. If DTC 51 occurs, or if the malfunction indicator lamp is "ON" constantly with no DTC(s), the ECM is defective.
      - If it is necessary to replace the ECM, follow the previous removal instructions.

ENGINE COOLANT TEMPERATURE (ECT) SENSOR

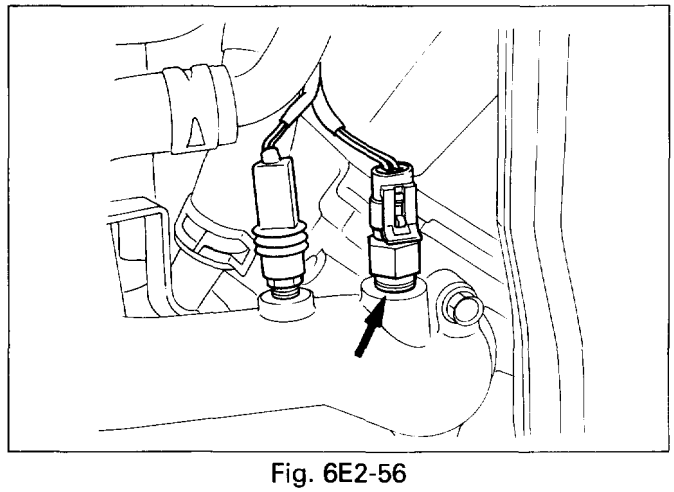

Fig. 6E2-56

REMOVAL

CAUTION:
Care must be taken when handling Engine Coolant Temperature (ECT) sensor. Damage to ECT sensor will affect proper operation of the fuel injection system.

Preparation: • Negative battery cable.
• Drain engine coolant system.

1. **Inlet manifold assembly**
   - Refer to "Fuel metering system" section "6E2-C2" for removal procedure.
2. **Electrical connector**
3. **ECT sensor**
   - Remove from rear of engine coolant transfer tube.

INSTALLATION

3. **ECT sensor**
   - Apply sealer or equivalent to threads only.
   - Tighten the ECT sensor to the specified torque

Torque	N·m (lb·ft)	30 (22)

2. **ECT sensor connector**
1. **Intake manifold assembly**
   - Refer to "Fuel metering system" section "6E2-C2" for installation.

INTAKE AIR TEMPERATURE (IAT) SENSOR

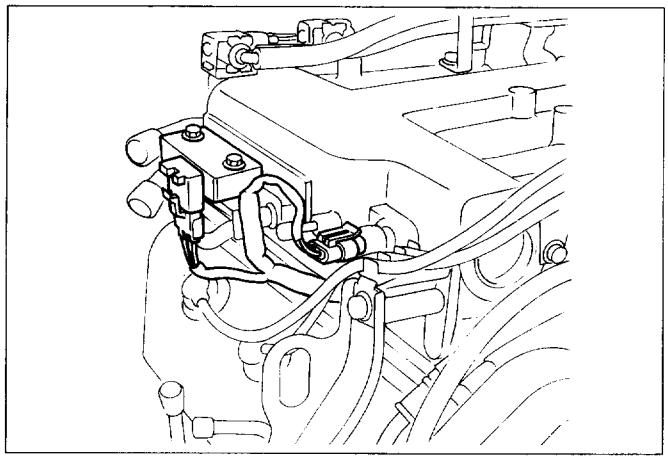

Fig. 6E2-57

REMOVAL

Preparation: • Negative battery cable.

1. **Wiring connector**
   - Disconnect connector from Intake Air Temperature (IAT) sensor.
2. **IAT sensor**

INSTALLATION

2. **IAT sensor**
   - Apply sealer or equivalent to threads only.
   - Tighten the IAT sensor to the specified torque.

Torque	N·m (lb·ft)	30 (22)

1. **Wiring connector**

HEATED OXYGEN SENSOR (HO2S)

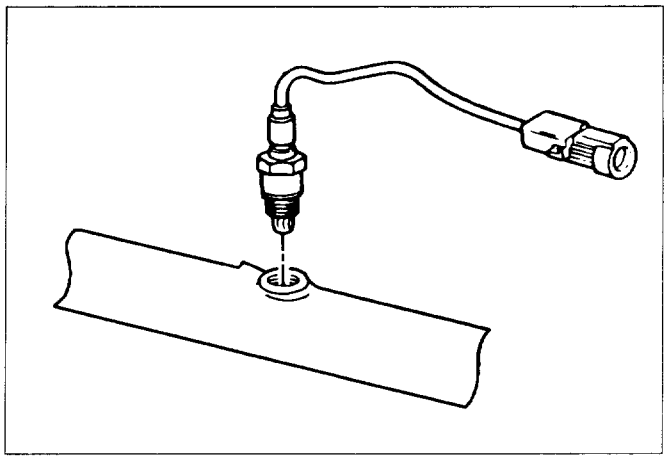

Fig. 6E2-58

REMOVAL

CAUTION
- The Heated Oxygen Sensor (HO2S) uses a permanently attached pigtail and connector. This pigtail should not be removed from the HO2S. Damage or removal of the pigtail or connector could affect proper operation of the HO2S.
- Take care when handling the HO2S. The in-line electrical connector and louver end must be kept free of grease, dirt, or other contaminants. Also, avoid using cleaning solvents of any type. Do not drop or roughly handle the HO2S.

Preparation: • Battery negative cable.

1. **HO2S wiring connector**
2. **HO2S**
   - The HO2S may be difficult to remove when engine temperature is below 48° (120°).
   - Excessive force may damage threads in exhaust pipe.

INSTALLATION

2. **HO2S**
   - A special anti-seize compound is used on the HO2S threads. The compound consists of a liquid graphite which will burn away, but the glass beads will remain, making the sensor easier to remove.

New or service sensors will already have the compound applied to the threads. If a sensor is removed from an engine and if for any reason it is to be reinstalled, the threads must have anti-seize compound applied before reinstallation.

- Apply anti-seize compound or equivalent to threads of oxygen sensor if necessary.
- Tighten the oxygen sensor to the specified torque.

Torque	N·m (lb·ft)	55 (40)

1. **HO2S wiring connector**

THROTTLE POSITION (TP) SENSOR

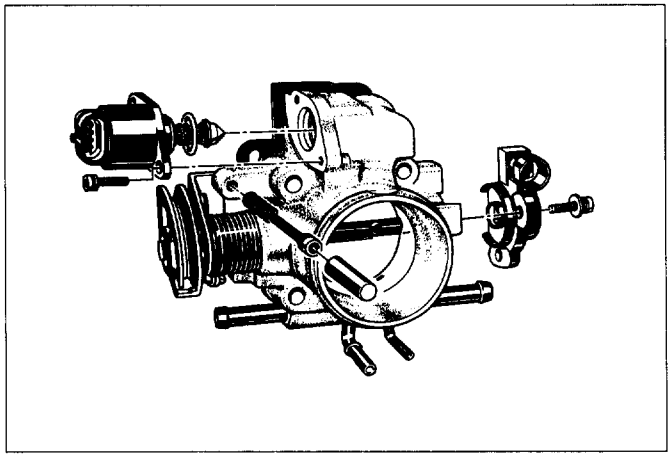

Fig. 6E2-59

REMOVAL

Preparation: • Battery negative cable.

1. **Throttle Position (TP) sensor wiring connector**
2. **TP sensor fixing screw**
3. **TP sensor**

INSTALLATION

3. **TP sensor**
2. **TP sensor fixing screw**
   - Tighten the fixing screw to the specified torque.

Torque	N·m (lb·in)	2 (18)

- Use a "Scan tool" to check TP sensor output voltage with throttle closed, should be under 0.85 volts. If over 0.85 volts, check for binding throttle shaft, or TP sensor lever. If all OK, replace TP sensor.

1. **TP sensor wiring connector**

MANIFOLD ABSOLUTE PRESSURE (MAP) SENSOR

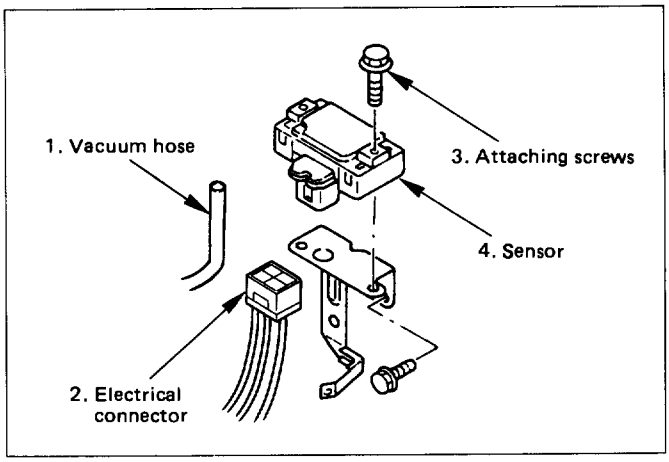

Fig. 6E2-60

REMOVAL

Preparation: • Battery negative cable.

1. **Vacuum hose**
2. **Electrical connector**
3. **Attaching screws**
4. **Sensor**

INSTALLATION

4. **Sensor**
3. **Attaching screws**
2. **Electrical connector**
1. **Vacuum hose**

VEHICLE SPEED SENSOR (VSS)

Refer to INSTRUMENT PANEL CLUSTER AND CONSOLE of this manual for replacement of vehicle speed sensor located in instrument panel.

POWER STEERING PRESSURE (PSP) SWITCH

Refer to STEERING, SUSPENSION, TIRES AND WHEELS for service of the power steering pressure switch.

PARK/NEUTRAL POSITION (PNP) SWITCH

See Section AUTOMATIC TRANSMISSION GENERAL INFORMATION Section for park/neutral position switch. "On-Vehicle Service" and adjustment procedures are also listed there.

CHART C-1A

PARK/NEUTRAL POSITION (PNP) SWITCH DIAGNOSIS (AUTO TRANSMISSION ONLY)

Circuit Description:

The Park/Neutral Position (PNP) switch contacts are a part of the Mode switch assembly. They are closed to ground in park or neutral and open in drive ranges.
The Engine Control Module (ECM) supplies voltage through a current limiting resistor to BLU/PNK wire and senses a closed switch when the voltage on BLU/PNK wire drops to less than one volt.
The ECM uses the PNP signal as one of the inputs to control idle air, vehicle speed sensor diagnostics, and exhaust gas recirculation.
If BLU/PNK wire indicates PNP (grounded), while in drive range, the ECM would be inoperative, resulting in possible detonation.
If BLU/PNK wire indicates drive (open), a dip in the idle may exist when the gear selector is moved into drive range.

Test Description:

Number(s) below refer to circled number(s) on the diagnostic chart.

1. Checks for a closed switch to ground in park position. Different makes of "Scan tools" will read PNP differently. Refer to tool operator's manual for type of display used for a specific tool.
2 To gain access to the wiring for the Diode, it will be necessary to remove the lower cover of the underhood fuse/Relay center.

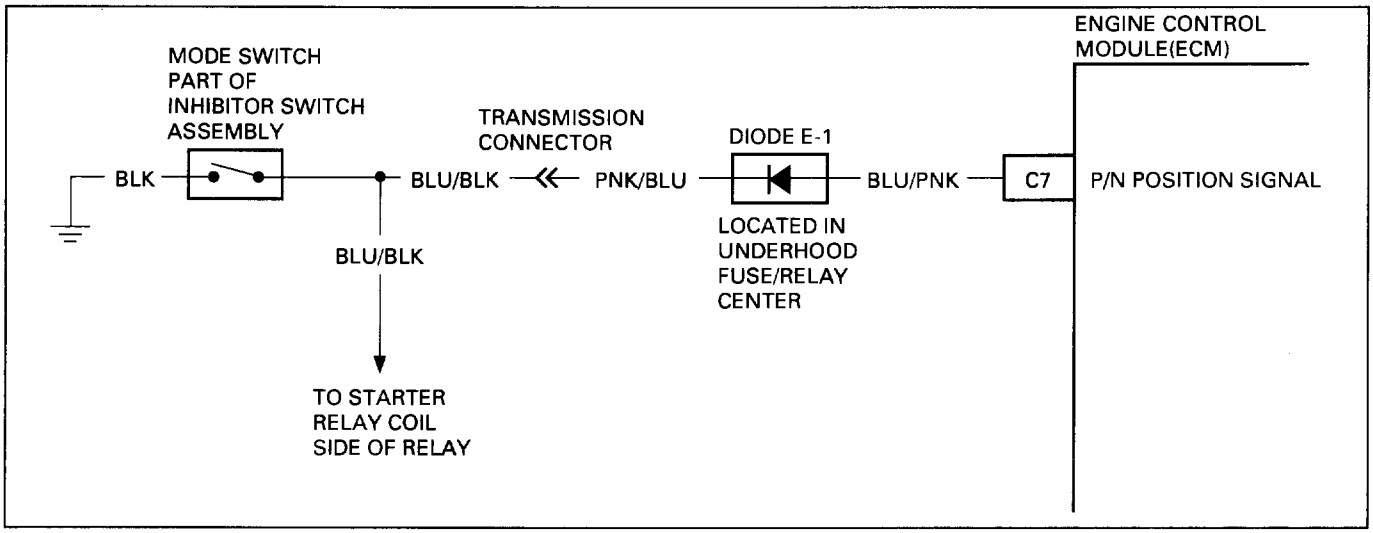

Fig. 6E2-61

CHART C-1A

PARK/NEUTRAL POSITION (PNP) SWITCH DIAGNOSIS (AUTO TRANSMISSION ONLY)

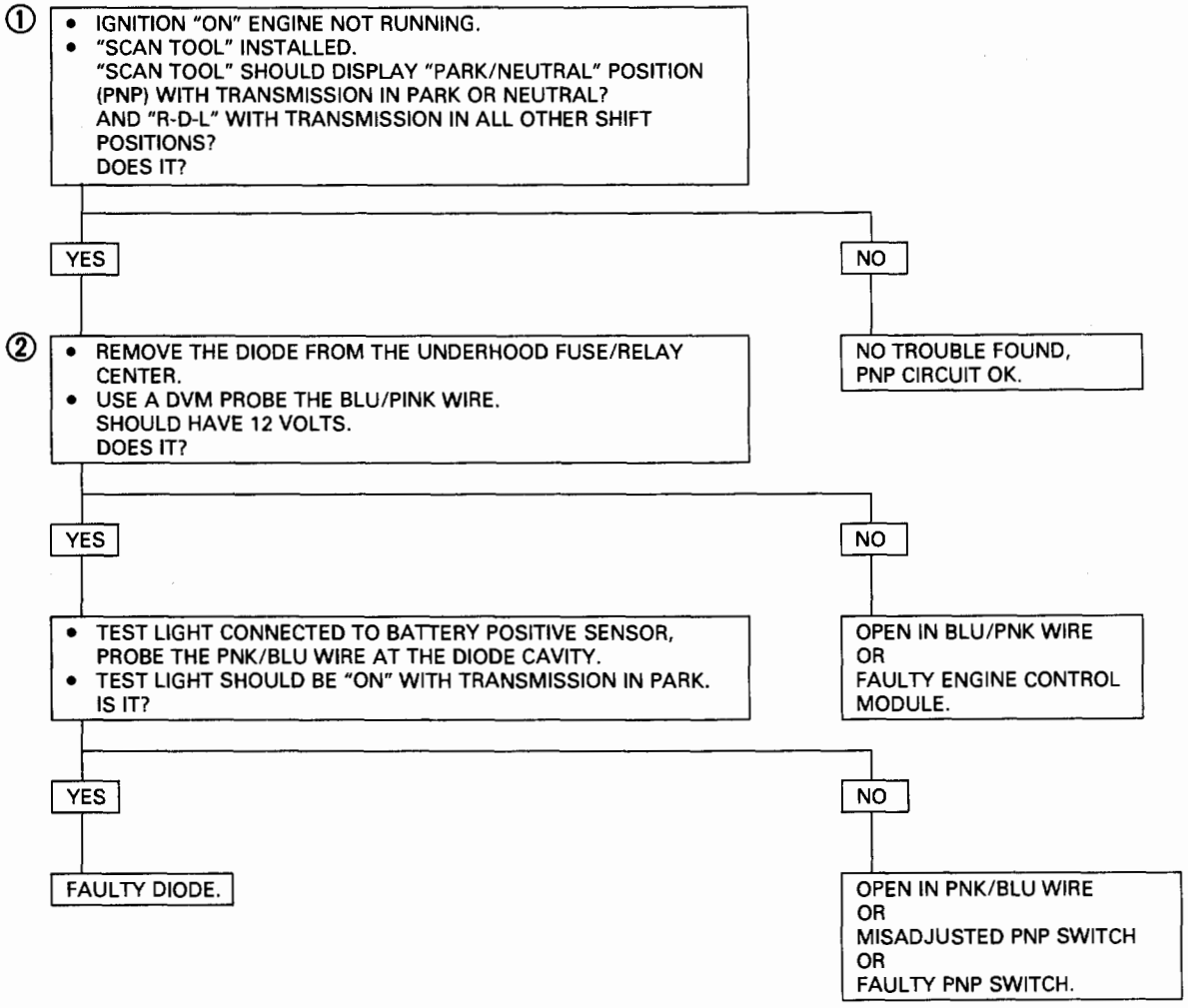

CHART C-1D

MANIFOLD ABSOLUTE PRESSURE (MAP) OUTPUT CHECK

Circuit Description:

Manifold Absolute Pressure (MAP) sensor measures the changes in the intake MAP which result from engine load (intake manifold vacuum) and revolution per minute changes; and converts these into a voltage output. The Engine Control Module (ECM) sends a 5-volt reference voltage to the MAP sensor. As the MAP changes, the output voltage of the sensor also changes. By monitoring the sensor output voltage, the ECM knows the MAP. A lower pressure (low voltage) output voltage will be about 1 - 2 volts at idle. While higher pressure (high voltage) output voltage will be about 4 - 4.8 at Wide Open Throttle. The MAP sensor is also used, under certain conditions, to measure barometric pressure, allowing the ECM to make adjustment for different altitudes. The ECM uses the MAP sensor to control fuel delivery and ignition timing.

Test Description:

Numbers below refer to circled numbers on the diagnostic chart.

CAUTION

- Be sure to use the same Diagnostic Test Equipment for all measurements.

① When comparing "Scan tool" readings to a known good vehicle, it is important to compare vehicle that use a MAP sensor having the same color insert or having the same "Hot Stamped" number. See figures on facing page.

② Applying 34 kPa (10" hydragyrum) vacuum to the MAP sensor should cause the voltage to be 1.5-2.1 volts than the voltage at Step 1. Upon applying vacuum to the sensor, the change in voltage should be instantaneous. A slow voltage change indicates a faulty sensor.

③ Check vacuum hose to sensor for leaking or restriction. Be sure that no other vacuum devices are connected the MAP hose.

NOTE:

Make sure electrical connector remains securely fastened.

④ Disconnect sensor from bracket and twist sensor by hand (only) to check for intermittent connection. Output changes greater that .10 volt indicate a bad sensor.

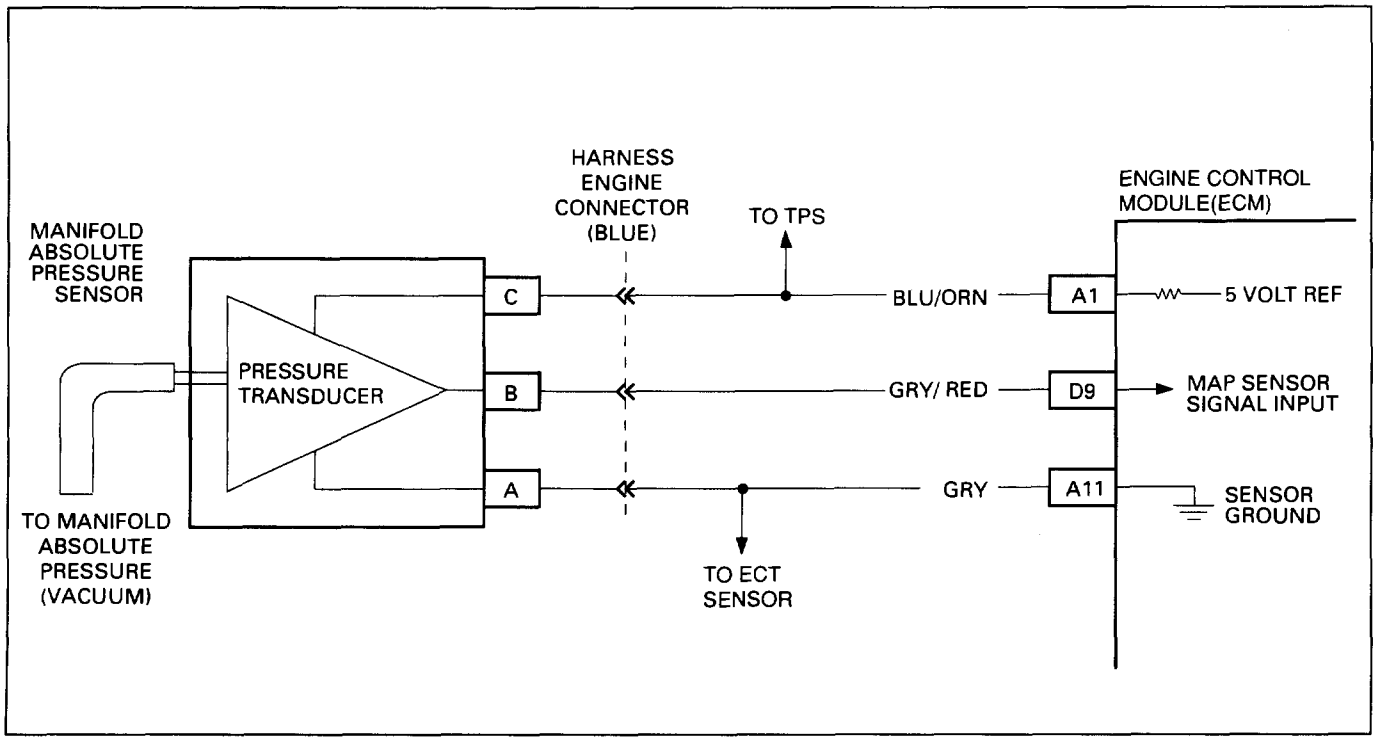

Fig. 6E2-62

CHART C-1D

MANIFOLD ABSOLUTE PRESSURE (MAP) VOLTAGE OUTPUT CHECK

①
- IGNITION "ON" ENGINE "OFF"
- "SCAN TOOL" SHOULD INDICATE A MANIFOLD ABSOLUTE PRESSURE (MAP) SENSOR VOLTAGE.
- COMPARE THIS READING WITH THE READING OF A KNOWN GOOD VEHICLE. SEE FACING PAGE TEST DESCRIPTION, STEP 1.
- VOLTAGE READING SHOULD BE THE SAME ± 0.40 VOLT.

YES → ②

NO → REPLACE SENSOR.

②
- DISCONNECT VACUUM HOSE AT MAP SENSOR AND PLUG HOSE.
- CONNECT A HAND VACUUM PUMP TO MAP SENSOR.
- START ENGINE.
- APPLY 34 kPa (10" HYDRAGYRUM) OF VACUUM AND NOTE VOLTAGE CHANGE.
  VOLTAGE CHANGE SHOULD BE 1.5 - 2.1 VOLTS LESS THAN STEP 1.
  IS IT?

YES → ③ NO TROUBLE FOUND. CHECK SENSOR HOSE FOR LEAKAGE OR RESTRICTION. BE SURE THIS HOSE SUPPLIES VACUUM TO MAP SENSOR ONLY.

NO → ④ CHECK SENSOR CONNECTION. IF OK, REPLACE SENSOR

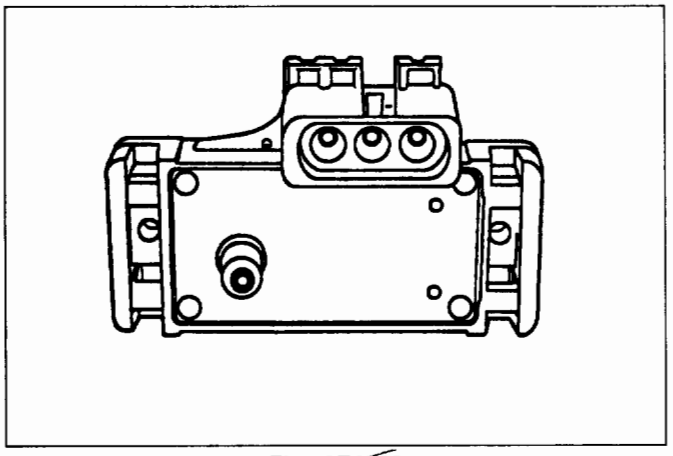

Fig. 6E2-63

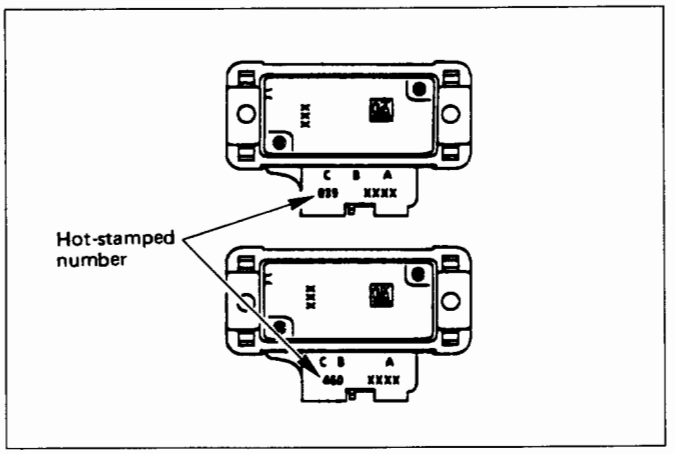

Fig. 6E2-64

CLEAR DIAGNOSTIC TROUBLE CODES AND CONFIRM "CLOSED LOOP" OPERATION AND NORMAL "CHECK ENGINE" MALFUNCTION INDICATOR LAMP OPERATION.

CHART C-1E

POWER STEERING PRESSURE (PSP) SWITCH DIAGNOSIS

Circuit Description:

The Power Steering Pressure (PSP) Switch is normally open to ground, and GRN/YEL wire will be near the battery positive voltage.
Turning the steering wheel increases power steering oil pressure and its load on an idling engine. The pressure switch will close before the load can cause an idle problem.
Closing the switch causes GRN/YEL wire to read less than 1 volt. The Engine Control Module (ECM) will increase the idle air rate and disengage the air conditioning relay.

- A pressure switch that will not close, or an open GRN/YEL wire, may cause the engine to stop, when power steering loads are high.
- A switch that will not open or a GRN/YEL wire shorted to ground, may affect idle quality and will cause the air conditioning relay to be de-energized.

Test Description:

Numbers below refer to circled numbers on the diagnostic chart.

① Different makes of "Scan tools" may display the state of this switch in different ways. Refer to "Scan tool" operator's manual to determine how this input is indicated.
② Checks to determine if GRN/YEL wire is shorted to ground.
③ This should simulate a closed switch.

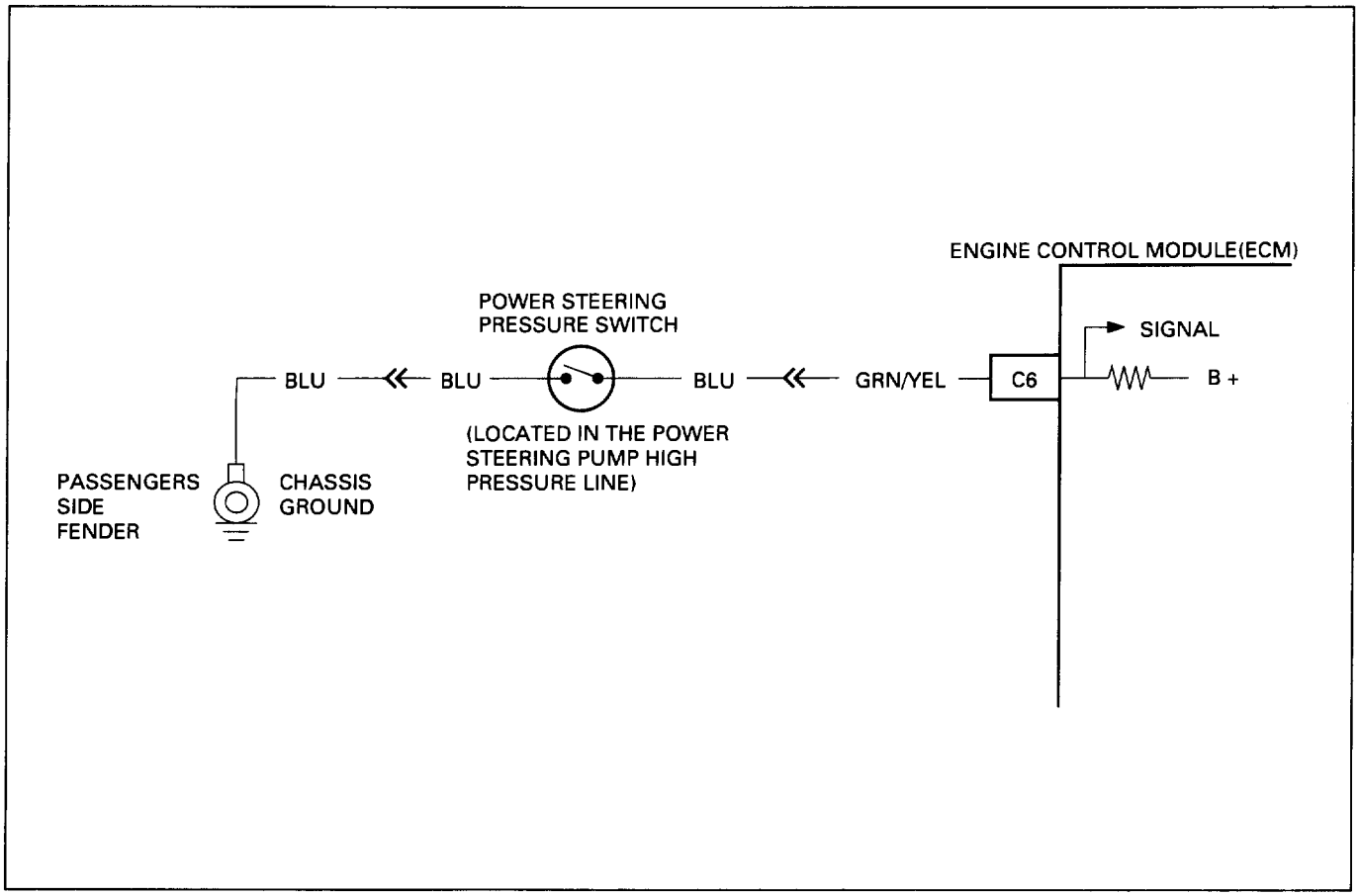

Fig. 6E2-65

CHART C-1E

POWER STEERING PRESSURE (PSP) SWITCH DIAGNOSIS

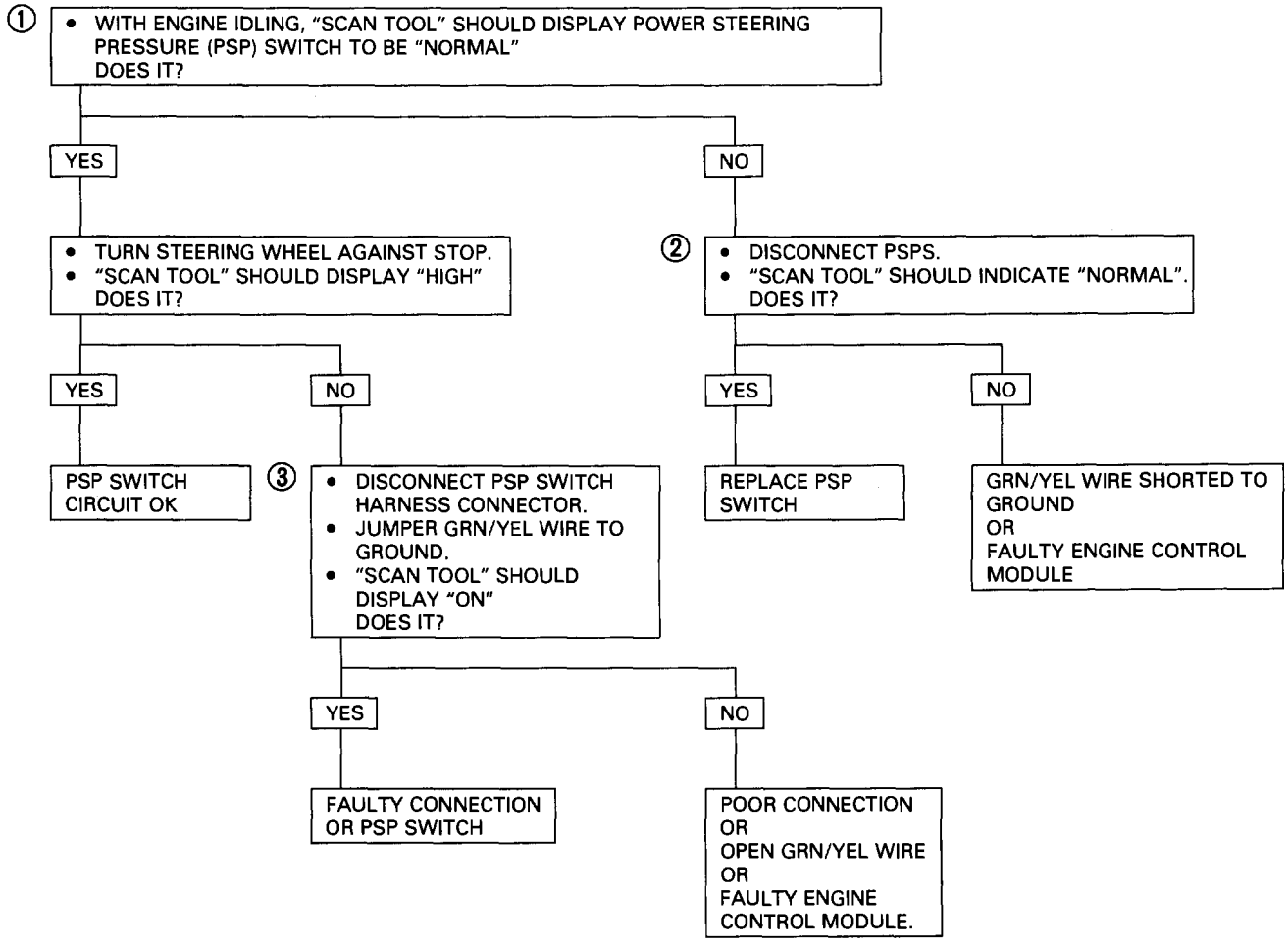

CLEAR DIAGNOSTIC TROUBLE CODES AND CONFIRM "CLOSED LOOP" OPERATION AND NORMAL "CHECK ENGINE" MALFUNCTION INDICATOR LAMP OPERATION.

CHART C-1F

HEATED OXYGEN SENSOR (HO2S) HEATER CHECK

Circuit Description:

The generator charging circuit supplies battery voltage to the heater part of Heated Oxygen Sensor (HO2S). The heater warms the HO2S to allow a varying voltage to be produced by the HO2S more rapidly instead of waiting for the HO2S to heat-up on its own.

Test Description: Number(s) below refer to circled number(s) on the diagnostic chart.

The following test procedures are for the heater part of the HO2S. No malfunction Diagnostic Trouble Codes (DTCs) will be logged if the heater fails to function properly.

① This will verify that battery positive voltage is present for the heater.
② This check will test the ground circuit to the heater.
③ This test the heater element resistance. Resistance will vary with the temperature of the sensor. Normal resistance is between 3.5 - 14.3 ohms.

Diagnostic Aids:

- A poor or loose connection at the HO2S could result in a false DTC being set or the O2 heater not functioning properly.
- A shorted HO2S heater could cause a DTC 13 to set.

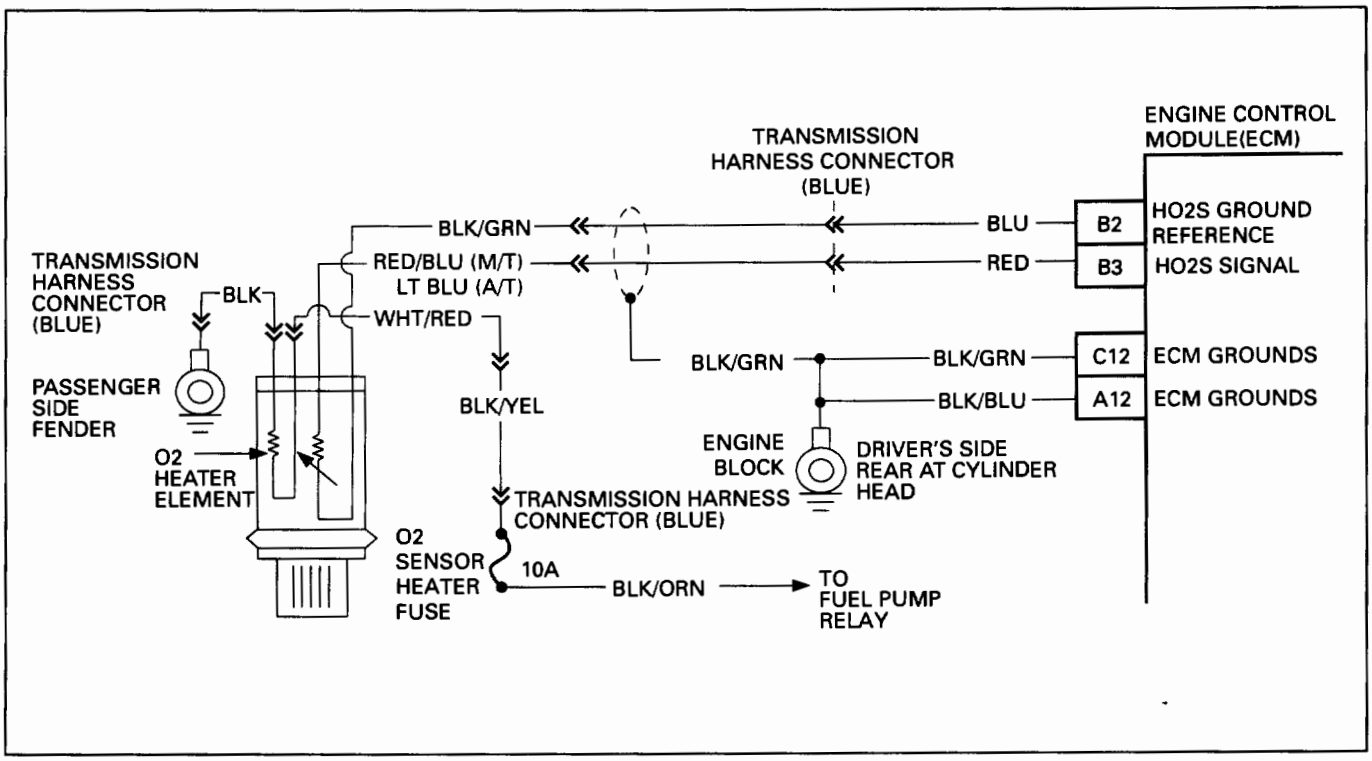

Fig. 6E2-66

CHART C-1F

HEATED OXYGEN SENSOR (HO2S) HEATER CHECK

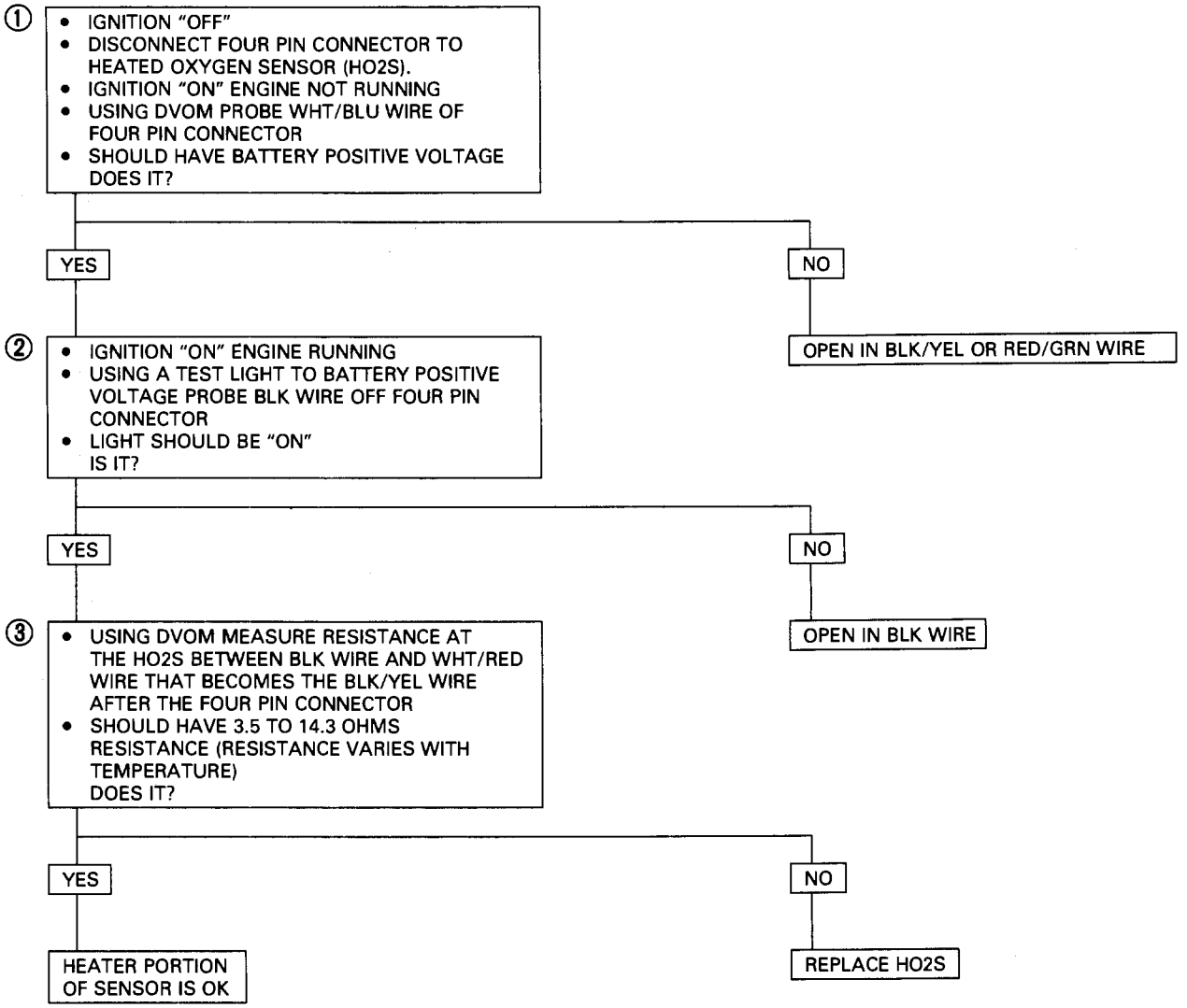

CLEAR DIAGNOSTIC TROUBLE CODES AND CONFIRM "CLOSED LOOP" OPERATION AND NORMAL "CHECK ENGINE" MALFUNCTION INDICATOR LAMP OPERATION.

SECTION C-2

FUEL METERING SYSTEM

CONTENTS

General Description . . . . . 6E2—116
Purpose . . . . . 6E2—116
Modes of Operation . . . . . 6E2—117
Starting Mode . . . . . 6E2—117
Clear Flood Mode . . . . . 6E2—117
Run Mode . . . . . 6E2—117
"Open Loop" . . . . . 6E2—117
"Closed Loop" . . . . . 6E2—117
Acceleration Mode . . . . . 6E2—117
Deceleration Mode . . . . . 6E2—117
Battery Positive Voltage Correction Mode . . . 6E2—117
Fuel Cutoff Mode . . . . . 6E2—117
Fuel Metering System Components . . . . . 6E2—118
Fuel Supply System . . . . . 6E2—118
Fuel Pump Electrical Circuit . . . . . 6E2—118
Fuel Rail Assembly . . . . . 6E2—118
Fuel Injectors . . . . . 6E2—119
Fuel Injector Driver Operation . . . . . 6E2—119
Fuel Pressure Control Valve Assembly . . . . . 6E2—119
Throttle Body (TB) Assembly . . . . . 6E2—120
Idle Air Control (IAC) Valve . . . . . 6E2—120
Throttle Position (TP) Sensor . . . . . 6E2—121
Induction Air Control Plate System . . . . . 6E2—121
Diagnosis . . . . . 6E2—121
Fuel Metering System . . . . . 6E2—121
Fuel System Pressure Test . . . . . 6E2—121
Idle Air Control (IAC) Valve . . . . . 6E2—121
Induction Air Control Plate System . . . . . 6E2—122
On-Vehicle Service . . . . . 6E2—122
Fuel Pump Relay . . . . . 6E2—122
Multiport Fuel Injection Components . . . . . 6E2—122
Fuel Pressure Relief Procedure . . . . . 6E2—122
Fuel Rail Assembly . . . . . 6E2—122
Unit Repair . . . . . 6E2—123
Fuel Injector/Rail . . . . . 6E2—123
Throttle Body Assembly . . . . . 6E2—124
Throttle Body (TB) . . . . . 6E2—125
Throttle Position (TP) Sensor . . . . . 6E2—126
Idle Air Control (IAC) Valve . . . . . 6E2—126
Minimum Throttle Body (TB) Position Check . . . 6E2—127
Chart C-2A Injector Balance . . . . . 6E2—128
Chart C-2C Idle Air Control (IAC) System Check . . 6E2—130
Chart C-2D Induction Air Control Plate System Check . . . . . 6E2—132

GENERAL DESCRIPTION

PURPOSE

The function of the fuel metering system is to deliver the correct amount of fuel to the engine under all operating conditions. Fuel is delivered to the engine by individual fuel injectors mounted in the intake manifold near each cylinder.

The main control sensor is the heated oxygen sensor, which is located in the front pipe. The heated oxygen sensor indicates to the engine control module the amount of oxygen in the exhaust gas, and the engine control module changes the air/fuel ratio to the engine by controlling the fuel injectors. The best air/fuel ratio to minimize exhaust emissions is 14.7 to 1, which allows the three way catalytic converter to operate most efficiently. Because of the constant measuring and adjusting of the air/fuel ratio, the fuel injection system is called a "Closed Loop" system (Fig. 6E2-67).

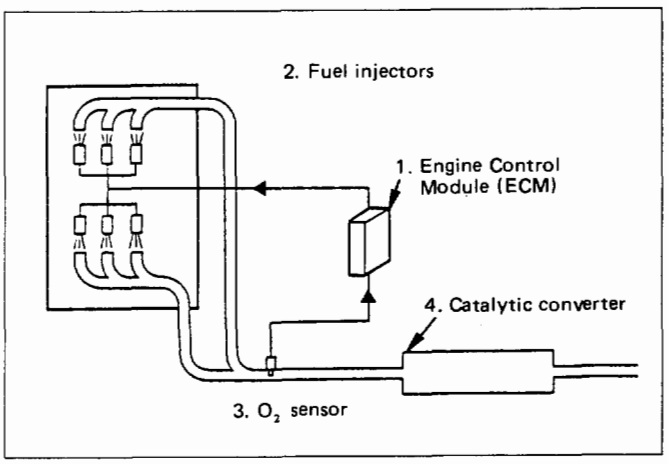

Fig. 6E2-67

MODES OF OPERATION

The Engine Control Module (ECM) uses voltage inputs from several sensors to determine how much fuel to give the engine. The fuel is delivered under one of several conditions, called "modes". All the modes are controlled by the ECM and are described below.

Starting Mode

When the ignition is first turned "ON", the ECM turns "ON" the fuel pump relay for two seconds, and the fuel pump builds up pressure. The ECM also checks the Engine Coolant Temperature (ECT) sensor and the Throttle Position Sensor, and the determines the proper air/fuel ratio for starting. This ranges from 1.5:1 —36°C (—33°F) to 14.7:1, at 94°C (201°F) ECT.
The ECM controls the amount of fuel delivered in the starting mode by changing how long the injector is turned "ON" and "OFF". The is done by "Pulsing" the injectors for very short times.

Clear Flood Mode

If the engine floods, it may be cleared by pushing the accelerator pedal down all the way. The ECM then will fixed air/fuel ratio 16.5:1. The ECM holds this injector rate as long as the throttle stays wide open. If the throttle position becomes less than approximately 70%, the ECM returns to the starting mode.

Run Mode

The run mode has two conditions called "Open Loop" and "Closed Loop"

"Open Loop"

When the engine is first started, and it is above 500 Rovolution Per Minute (rpm), the system goes into "Open Loop" operation. IN "Open Loop," the ECM ignores the signal from the heated oxygen sensor (HO2S), and calculates the air/fuel ratio based on inputs from the ECT sensor and manifold absolute pressure sensors.
The system stays in "Open Loop" until the following conditions are met:

1. The HO2S has varying voltage output, showing that it is hot enough to operate properly. (This depends on temperature.)
2. The ECT sensor is above a specified temperature.
3. A specific amount of time has elapsed after starting the engine.

"Closed Loop"

The specific values for the above conditions vary with different engines, and are stored in the ECM. When these conditions are met, the system goes into "Closed Loop" operation. In "Closed Loop", the ECM calculates the air/fuel ratio (injector on-time) based on the signal from the HO2S. This allows the air/fuel ratio to stay very close to 14.7:1.

Acceleration Mode

The ECM responds to rapid changes in throttle position and air flow, and provides extra fuel.

Deceleration Mode

The ECM responds to changes in throttle position and air flow, and reduces the amount of fuel. When deceleration is very fast, the ECM can cut off fuel completely for short periods.

Battery Positive Voltage Correction Mode

When battery positive voltage is low, the ECM can compensate for a weak spark delivered by the ignition control module by:

- Increasing injector pulse width.
- Increasing the idle rpm.
- Increasing ignition dwell time.

Fuel Cutoff Mode

The fuel injectors are shut "OFF" if engine speed "exceed" 6880 rpm (DOHC) or 6800 rpm (SOHC). This is to prevent damage to engine. When engine speed is below 6880 rpm (DOHC) or 6800 rpm (SOHC), the fuel injectors are again pulsed at a normal mode.

FUEL METERING SYSTEM COMPONENTS

The fuel metering system (Fig. 6E2-68) consists of the following components:

- Fuel supply components (fuel tank, pump and lines).
- Fuel pump electrical circuit.
- Fuel rail assembly, including:
  - Fuel pressure control valve
- Throttle body assembly, including:
  - Idle Air Control valve
  - Throttle Position Sensor

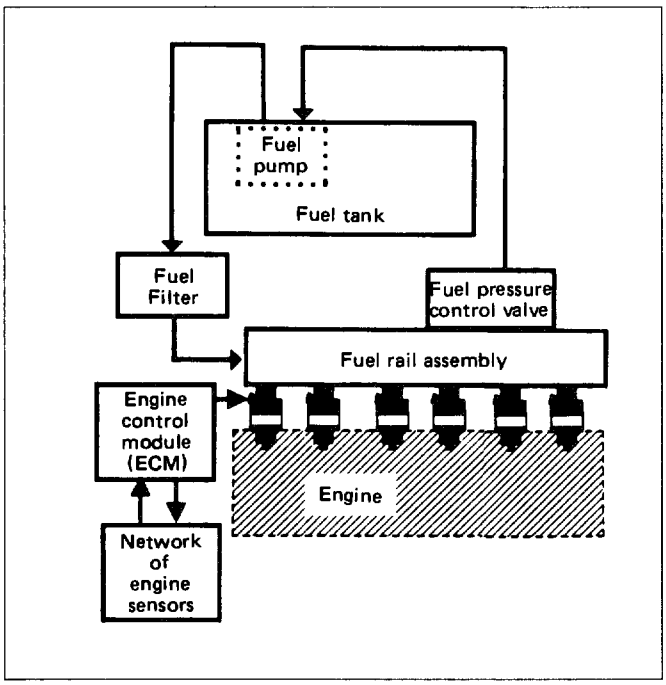

Fig. 6E2-68

FUEL SUPPLY SYSTEM

The fuel supply is stored in the fuel tank. An electric fuel pump, located in the fuel tank with the gage sending unit, pumps fuel through an in-line fuel filter to the fuel rail assembly. The pump is designed to provide fuel at a pressure above the pressure needed by the injectors. A fuel pressure control valve, an integral part of the fuel rail assembly, keeps fuel available to the injectors at a controlled pressure. Unused fuel is returned to the fuel tank by a separate line. See ENGINE FUEL (SECTION 6C) for replacement procedures covering the fuel tank, fuel pump, in-line filter and fuel lines.

FUEL PUMP ELECTRICAL CIRCUIT

When the key is first turned "ON" without the engine running, Engine Control Module (ECM) will turn the fuel pump relay "ON" for two seconds. This builds up the fuel pressure quickly. If the engine is not started within two seconds, the ECM will shut the fuel pump "OFF" and wait until the engine starts. As soon as the engine is cranked, the ECM will turn the relay "ON" and run the fuel pump.

An inoperative fuel pump would cause a no start condition. A fuel pump which does not provide enough pressure can result in poor performance, (refer to CHARTs A-5 and A-7).

FUEL RAIL ASSEMBLY

The fuel rail assembly (Fig. 6E2-69) is mounted to the Inlet manifold, and performs several functions: It positions the injectors in the cylinder head, it distributes fuel evenly to the injectors, and it integrates the fuel pressure control valve into the fuel metering system. Fuel flow within the rail is shown in Fig. 6E2-70.

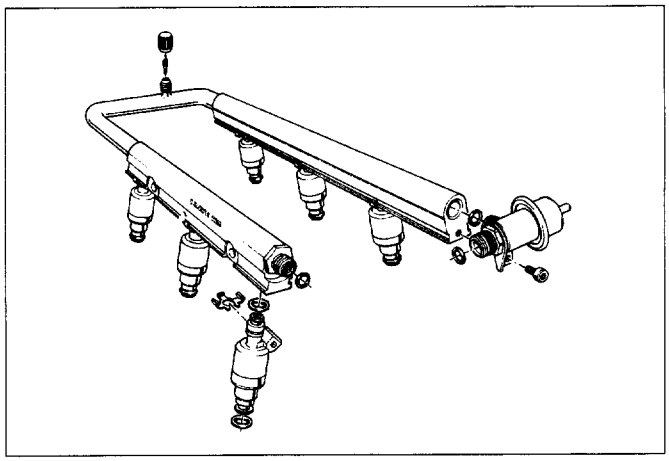

Fig. 6E2-69

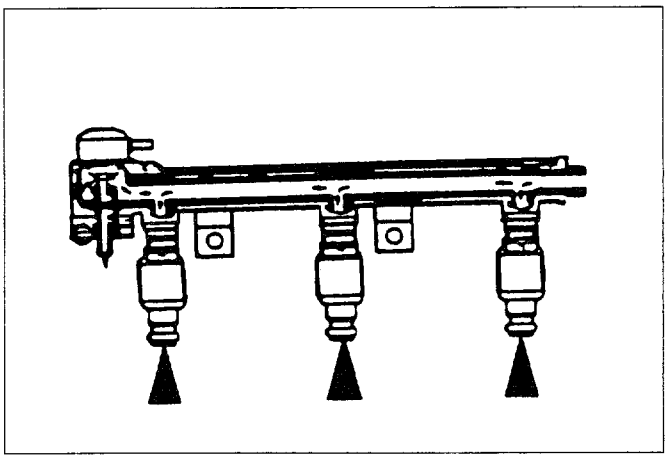

Fig. 6E2-70

FUEL INJECTORS

The multiport fuel injection injector assembly is a solenoid-operated device, controlled by the Engine Control Module (ECM), that meters pressurized fuel to a single engine cylinder.

The ECM energizes the low impedance (2.0 ohms) for DOHC or High impedance (12.2 ohms) for SOHC solenoid to a normally closed ball valve. This allows fuel to flow into the top of the injector, past the ball valve, and through a recessed flow director plate at the injector outlet (Fig. 6E2-71). The director plate has six machined holes that control the fuel flow, generating a conical spray pattern of finely atomized fuel at the injector tip. Fuel from the tip is directed at the intake valve, causing it to become further atomized and vaporized before entering the combustion chamber.

An injector which is stuck partially open would cause a loss of pressure after engine shut down. Also, an extended crank times would be noticed on some engines. Dieseling could also occur because some fuel could be delivered to the engine after the ignition is turned "OFF".

FUEL INJECTOR DRIVER OPERATION

The method of turning the Fuel Injectors "ON" and "OFF" is called a "Peak" and "Hold" Driver System.

The ECM uses a transistor to "Peak" Injector to open it. A second set of Injector Drivers will "Hold" the Injectors open for the calculated pulse width. The ECM has three (3) Injector Drivers, they are labeled A, B, and C inside the ECM. Injector Driver "A" is used to open the Injector initially (Peak) and depending on available battery positive voltage Injector Drive "B" or "C" is used to "Hold" the Injector for the amount of time necessary to inject the proper amount of fuel into the cylinder. A resistor module in part of the Injector Driver circuits to protect the Injector Drivers from high current (amps). If one of the Driver circuits become "Open" the vehicle will not start. Diagnosis of the Injector driver circuits are done with Chart A-3 "Cranks But Won't Run" chart in SECTION 6E2-A of this service manual.

FUEL PRESSURE CONTROL VALVE ASSEMBLY

The fuel pressure control valve is a diaphragm-operated relief valve with fuel pump pressure on one side and regulator spring pressure and intake manifold absolute pressure on the other (Fig. 6E2-72).

The function of the regulator is to maintain a constant pressure differential across the injectors at all times.

The fuel pressure control valve compensates for engine load by increasing fuel pressure as engine vacuum drops.

The fuel pressure control valve is mounted at the end of the fuel rail, and is serviced as a complete assembly.

The system operates in an acceptable pressure range of 280 to 320 kPa (41 to 46 psi) with engine running.

If the pressure is too low, poor performance and a diagnostic trouble code 44 could result. If the pressure is too high, excess odor and a diagnostic trouble code 45 could result.

CHART A-7 has information on diagnosing fuel pressure conditions.

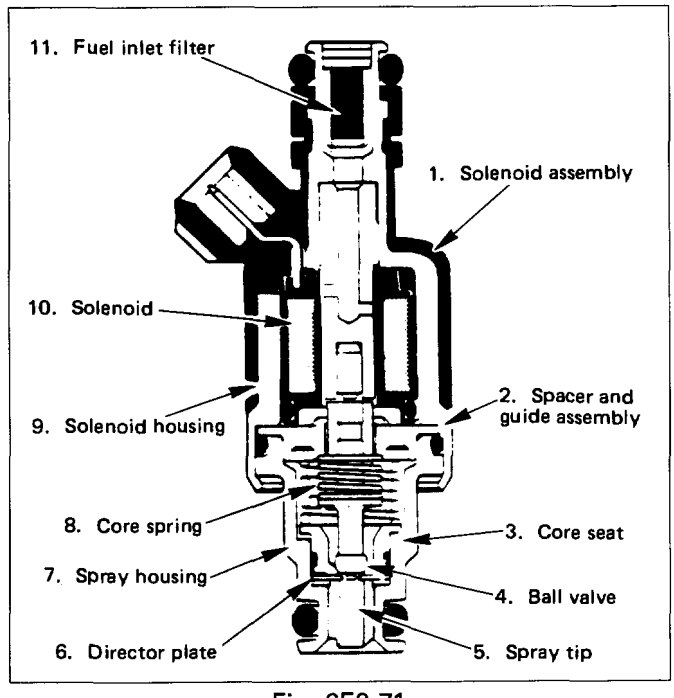

Fig. 6E2-71

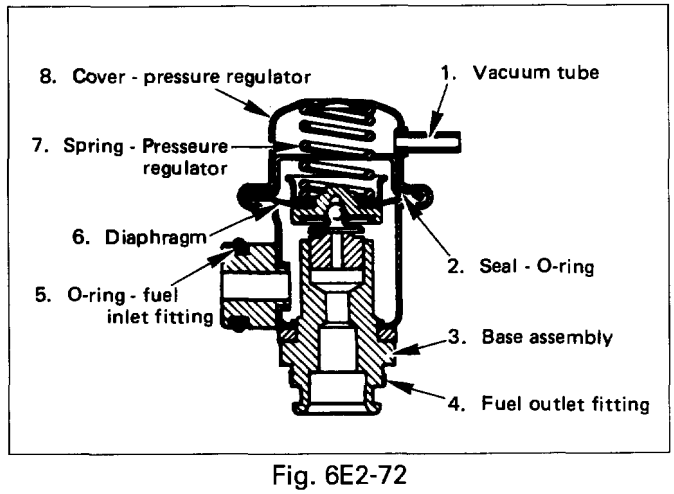

Fig. 6E2-72

THROTTLE BODY (TB) ASSEMBLY

The Throttle Body (TB) assembly is attached to the intake manifold air plenum, and is used to control air flow into the engine, thereby controlling engine output (Fig. 6E2-73). The TB within the TB is opened by the driver through the accelerator controls. During engine idle, the TB is almost closed, and air flow control is handled by the Idle Air Control (IAC) valve, described below. To prevent TB icing during cool weather operation, engine coolant is directed through a engine coolant tube, part of the TB, the engine coolant then circulates through internal passageways around the throttle bore and returns via the return engine coolant tube.

The TB also provides the location for mounting the Throttle Position Sensor. Vacuum ports the located at, above or below the throttle body to generate vacuum signal needed by various components.

Idle Air Control (IAC) Valve

Engine idle speed is controlled by the Engine Control Module (ECM) through the Idle Air Control (IAC) valve mounted on the TB. The ECM sends voltage pulses to the IAC motor windings causing the IAC valve pintle to move "IN" or "OUT" a given distance (a step or count) for each pulse. The pintle movement controls the airflow around the TBs, which in turn, controls engine idle speed.

- The "controlled" or desired idle speed for all engine operating conditions is programmed into the calibration of the ECM. The programmed engine speeds are based on engine coolant temperature, park/neutral position switch status, vehicle speed, battery positive voltage, and air conditioning pressure (if equipped).
- The ECM "learns" the proper IAC valve positions to achieve warm, stabilized idle speeds (revolution per minute), desired for the various conditions (Park/Neutral position or Drive, air conditioning "ON" or "OFF", if equipped). This information is stored in ECM "Keep Alive" memories (information is retained after ignition is "OFF"). All other IAC valve positioning is calculated based on these memory values.

  As a result, engine variations due to wear and variations in minimum TB position (within limits) do not affect engine idle speeds. This system provides correct idle control under all conditions. This also means that disconnecting power to the ECM can result in incorrect idle control or necessity to partially depress the accelerator pedal when starting until the ECM relearns idle control. Refer to note regarding clearing memory in "ECM and Sensors," Section "6E2-C1".
- Engine idle speed is a function of total airflow into the engine based on IAC valve pintle position plus TB opening plus calibrated vacuum loss through accessories.
- The minimum TB position is set at the factory with a stop screw. This setting allows enough air flow by the TB to cause the IAC valve pintle to be positioned a calibrated number of steps (counts), from the seat, during "controlled" idle operation. The minimum TB position setting on this engine should not be considered the "minimum idle speed", as on other fuel injected engines. The throttle stop screw is covered with a plug at the factory following adjustment.

CAUTION:
Do not attempt to remove the protective cap and readjust the stop screw before reviewing the "Minimum TB Position Check", later in this section. Misadjustment may result in damage to the IAC valve or TB.

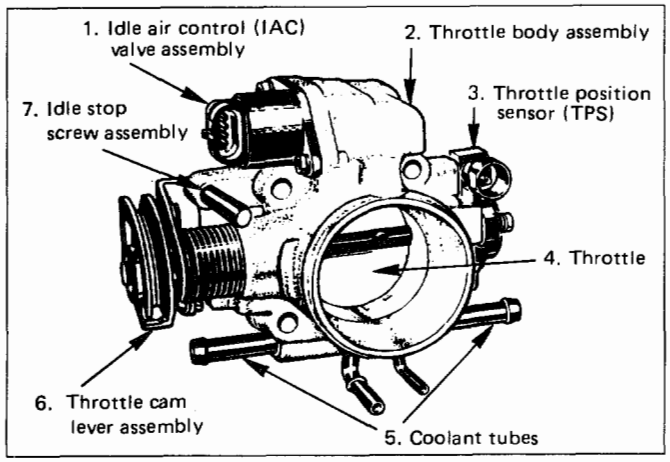

Fig. 6E2-73

- The ECM normally resets the IAC valve pintle position once during each ignition cycle, when vehicle speed increases above 35 miles per hour on moderate acceleration. During the reset, the ECM commands the IAC valve pintle to retract completely, then move "IN" to the seated position (to establish the zero count position), and then back out to the desired position. If, after the reset, the ECM is able to control the idle speed within the calibrated count range, the IAC valve will not be reset again until the ignition has been turned "OFF", the engine restarted and the car then driven above 35 mile per hour. If the ECM is not able to control idle speed within the calibrated count range after the first reset, the ECM assumes the IAC valve pintle position is "lost", and enables another reset to occur. This will continue until the pintle position is relearned.
- If the IAC valve is suspected as being the cause of improper idle speed, perform a functional check of the IAC valve (CHART C-2C) as described later in this section.

Throttle Position (TP) Sensor

The Throttle Position (TP) Sensor is mounted on the side of the throttle body opposite the throttle lever assembly. Its function is to sense the current throttle body position and relay that information to the ECM. Knowledge of TP is needed by the ECM to generate the proper injector pulse width. If the TP sensor senses a Wide Open Throttle, a voltage signal indicating this condition is transmitted to the ECM. The ECM will widen the injector pulse, or increase the repetition rate, permitting increased fuel flow to each for the six fuel injectors located in the fuel fail. As the throttle shaft rotates in response to movement of the accelerator pedal (opening or closing of the throttle body), the throttle shaft transmits throttle movement to the TP sensor. A potentiometer (variable resistor) within the TP sensor assembly creates a voltage that varies in response to TP. By applying a reference voltage (+5 VDC) to the TP sensor input, a varying voltage (reflecting TP) is available at the TP sensor output. The voltage output from the TP sensor is sent to the ECM for use in determining current TP.
For further information of TP sensor, refer to "ECM and Sensors", Section "6E2-C1". The TP sensor is an auto zeroing type and cannot be adjusted.

INDUCTION AIR CONTROL PLATE SYSTEM (DOHC) (Fig. 6E2-74)

This system consists of the Induction Air control plate valve mounted in the common chamber duct and a vacuum
operated diaphragm which moves the Induction Air Control Plate linkage. The vacuum to the diaphragm is turned "ON" or "OFF" by a vacuum switching solenoid which is electrically operated by the ECM.
Refer to CHART C-2D for diagnosing the Induction air control plate system.

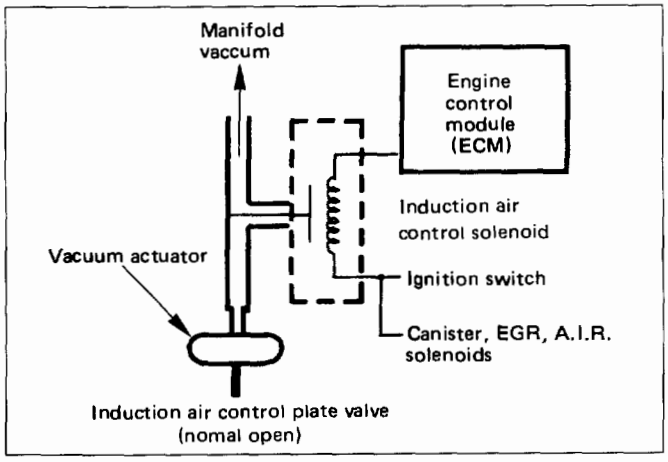

Fig. 6E2-74

DIAGNOSIS

FUEL METERING SYSTEM

Some failures of this system will result in the symptom, "Engine Cranks But Will Not Run". If this condition exists, see CHART A-3. This chart will determine if the problem is caused by the ignition system, ECM or fuel pump circuit. If it's determined to be a fuel problem. CHART A-5 or A-7 will be used. This includes the injectors, fuel pressure control valve, fuel pump and fuel pump relay. The fuel system wiring schematic diagram is covered on the facing page of CHART A-5.
If a malfunction occurs in the fuel control system, it usually results in either a rich or lean Heated Oxygen Sensor (HO2S) signal condition. This condition is sensed by the HO2S and the ECM will change the fuel calculation (injector pulse width) based on HO2S input.
The change made to the fuel calculation will be indicated by a change in the block learn values which can be displayed on a "Scan tool". The ideal block learn values are around 128 counts. If the HO2S senses a lean condition, the ECM will add fuel, resulting in a block learn value above 128 counts. If the HO2S senses a rich condition, the ECM will subtract fuel, resulting in a block learn value below 128 counts.
Block learn values can vary greatly, depending on temperature, altitude and individual engine tolerances. The programmed range for block learn values is 58 to 198. Values within this range indicate the system is in "control". If a system is operating near the extremes of the block learn range during normal vehicle operation, and there is a driveability complaint, the fuel metering system should be checked. Refer to the diagnostic trouble code 45 chart on the facing page for potential causes of a rich condition (low block learn values). Refer to the diagnostic trouble code 44 chart facing page for potential causes of a lean condition (high block learn values). If a driveability symptom exists, also refer to the particular symptom in "Symptoms", Section "6E2-B" for additional items to check.

FUEL SYSTEM PRESSURE TEST

A fuel system pressure test procedure is included in CHART A-7 under "Fuel System Diagnosis" in "Engine Components/Wiring Diagrams/Diagnostic Charts", Section "6E2-A" diagnostic charts.

IDLE AIR CONTROL (IAC) VALVE

A "Scan tool" will display Idle Air Control (IAC) valve position in "Counts" or steps. "0" steps indicates the ECM is commanding the IAC valve to be driven all the way in, to a fully seated position. This condition is usually caused by a vacuum leak.
The higher the number of counts, the more air is being allowed to pass the IAC valve. A functional check of the IAC valve system (CHART C-2C) is provided in this section. Refer to "Refer, Unstable, or Incorrect Idle, Stalling" in "Symptoms", Section "6E2-B" for other possibilities for the cause of idle problems.

INDUCTION AIR CONTROL PLATE SYSTEM

Refer to CHART C-2D to diagnose the Induction air control plate system.

ON-VEHICLE SERVICE

FUEL PUMP RELAY

The fuel pump relay is mounted in the engine compartment. Other than checking for loose connectors, the only service possible is replacement.

MULTIPORT FUEL INJECTION COMPONENTS

CAUTION:

- To reduce the risk of fire and personal injury, it is necessary to relieve the fuel system pressure before servicing fuel system components.
- After relieving system pressure, a small amount of fuel may be released when servicing fuel lines or connections. In order to reduce the chance of personal injury, cover fuel line fittings with a shop towel before disconnecting, to catch any fuel that may leak out. Place the towel in an approved container when disconnect is completed.

Fuel Pressure Relief Procedure

1. Remove fuel cap.
2. Remove fuel pump relay from underhood relay box.
3. Start engine and allow to stall.
4. Crank engine for additional 30 seconds.
5. Remove negative battery cable.

FUEL RAIL ASSEMBLY

An eight digit identification number is stamped on the side of the fuel rail (Fig. 6E2-75). Refer to this number if servicing or part replacement is required.
Names of component parts appear in the numbered list on the disassembled view (Fig. 6E2-75).

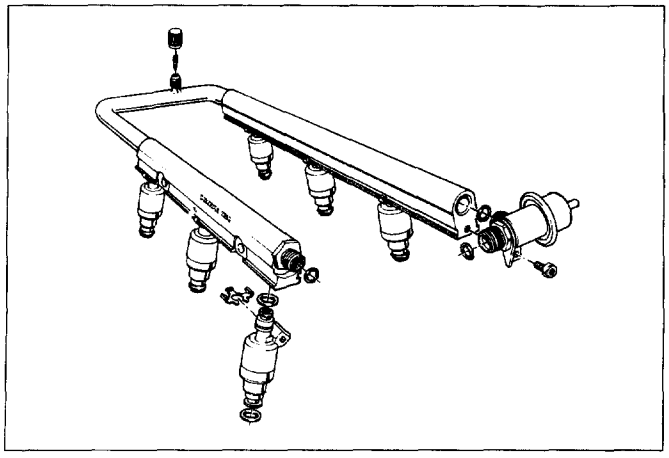

Fig. 6E2-75

CAUTION:

- Do not attempt to remove the fuel inlet fitting on the fuel rail, it is staked in place. To do so will result in damage to the fuel rail or to the internal O-ring seal.
- Do care in removing the fuel rail assembly, to prevent damage to the injector electrical connector terminals and the injector spray tips.
- Prevent dirt and other contaminants from entering open lines and passages. Fittings should be capped, and holes plugged, during servicing.
- Before removal, the fuel rail assembly may be cleaned with a spray type engine cleaner, following package instructions. Do not immerse fuel rails in liquid cleaning solvent.

UNIT REPAIR

FUEL INJECTOR/RAIL

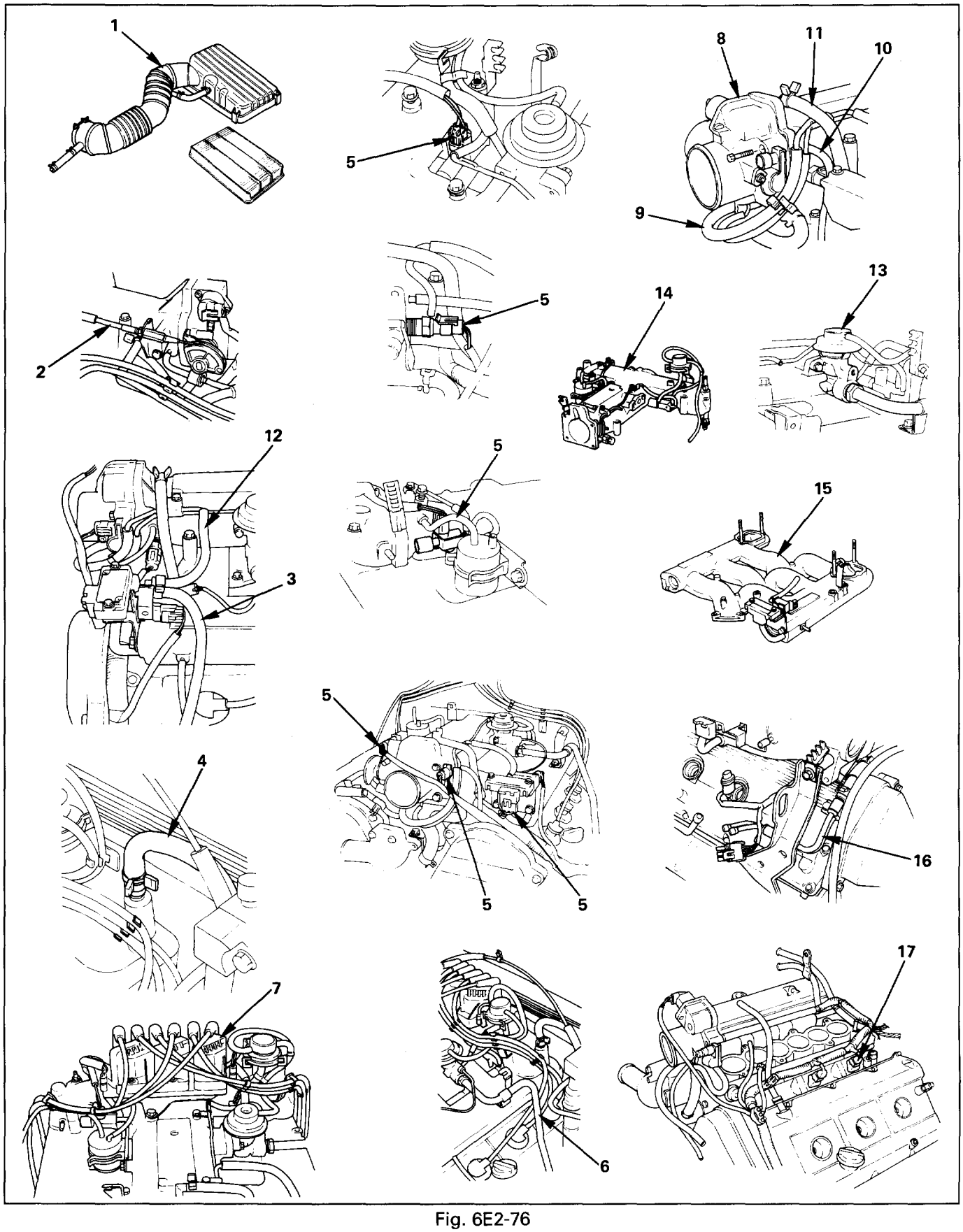

Fig. 6E2-76

REMOVAL

Preparation: • Engine hood
• Battery negative cable

1. **Air cleaner assy**
2. **Accelerator pedal cable**
   - Disconnect from throttle body and cable brackets.
3. **Canister vacuum hose**
   - Disconnect from vacuum switch valve (VSV).
4. **Vacuum booster hose**
   - Disconnect from Common chamber duct.
5. **Connectors**
   - Disconnect idle air control valve, throttle position sensor, manifold absolute pressure, canister VSV, exhaust gas recirculation (EGR) VSV, intake air temperature and VSV.
6. **High tension cable**
   - Remove from cylinder heads.
7. **Electronic ignition (EI) module assy**
   - Disconnect 3 connector from EI module.
   - Remove 3 bolts from EI bracket and EI assy.
8. **Throttle body (TB)**
   - Remove 4 bolts from TB.
9. **Vacuum hoses**
   - Disconnect canister VSV and EGR VSV vacuum hose from TB.
10. **Fuel pressure control valve vacuum hose**
    - Disconnect from common chamber duct.
11. **PCV hose**
    - Disconnect from common chamber duct.
12. **Evaporate emission canister purge hose**
    - Disconnect from common chamber duct.
13. **EGR valve assy**
    - Remove 4 bolts from common chamber duct and exhaust manifold.
14. **Common chamber duct**
    - Remove 4 bolts, 4 nuts and 3 duct bracket fixing bolts.
    - Remove ground cable fixing bolt from rear of common chamber duct.
15. **Common chamber**
    - Remove 6 bolts and 2 nuts.
    - Remove common chamber bracket fixing bolts from rear of common chamber.
16. **Fuel hose**
    - Feed and return hose from fuel pipe and 2 fixing bolts from cylinder head.
17. **Fuel rail assembly**
    - Remove fuel injector connector.
    - Remove fuel rail fixing bolts.
    - Remove fuel rail assy.

DISASSEMBLY

NOTE:
- If an injector becomes separated from the rail and remains in the cylinder head, both injector O-ring seals and the retainer clip must be replaced.

1. **Regulator attaching screw**
2. **Fuel pressure control valve assembly**
3. **Injector retainer clip (Fig. 6E2-77)**
4. **Multiport fuel injection injector assembly**
5. **Fuel rail**

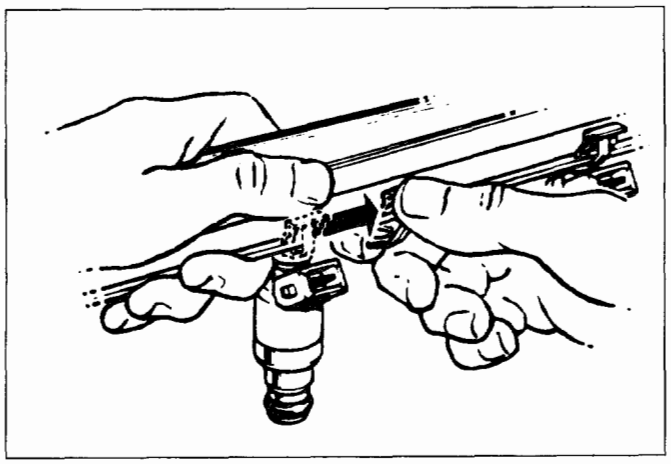

Fig. 6E2-77

REASSEMBLY

5. **Fuel rail**
4. **Multiport fuel injection injector assembly**
   - Lubricate new injector O-ring seal with engine oil, and install on injectors.
3. **Injector retainer clip**
2. **Fuel pressure control valve assembly**
1. **Regulator attaching screw**

INSTALLATION

To install, follow the removal steps in the reverse order.

THROTTLE BODY ASSEMBLY

The TB assembly repair procedures cover component replacement with the unit on the vehicle. However, TB replacement requires that the complete unit be removed from the engine.

The last three digits of the eight digit identification number are stamped on the TB casting, next to the throttle stop screw (Fig. 6E2-78). The part number begins with "17091..." Refer to this number if servicing or part replacement is required.

Names of component parts can be found on the numbered list on the disassembled view (Fig. 6E2-78).

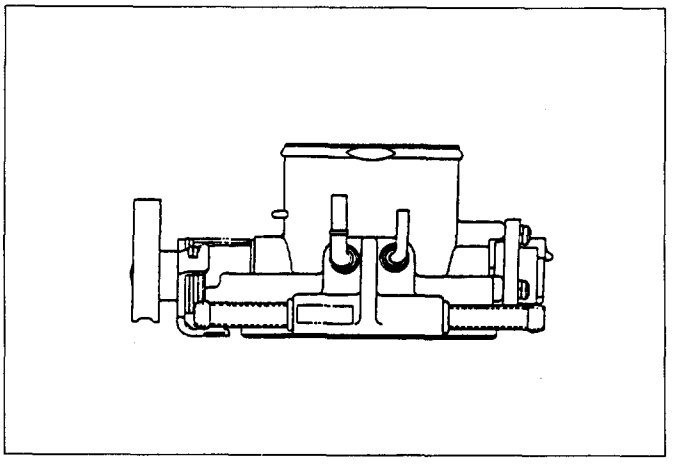

Fig. 6E2-78

- The throttle bore and valve deposits may be cleaned on-vehicle, using carburetor cleaner and a shop towel. Do not use a cleaner that contains methyl ethyl ketone. It is an extremely strong solvent, and not necessary for this type of deposit.
- The Throttle Body (TB) metal parts may be cleaned following disassembly, in a cold immersion-type cleaner.

NOTE:
The Throttle Position Sensor and Idle Air Control valve should NOT come in contact with solvent or cleaner, as they may be damaged.

Throttle Body (TB)

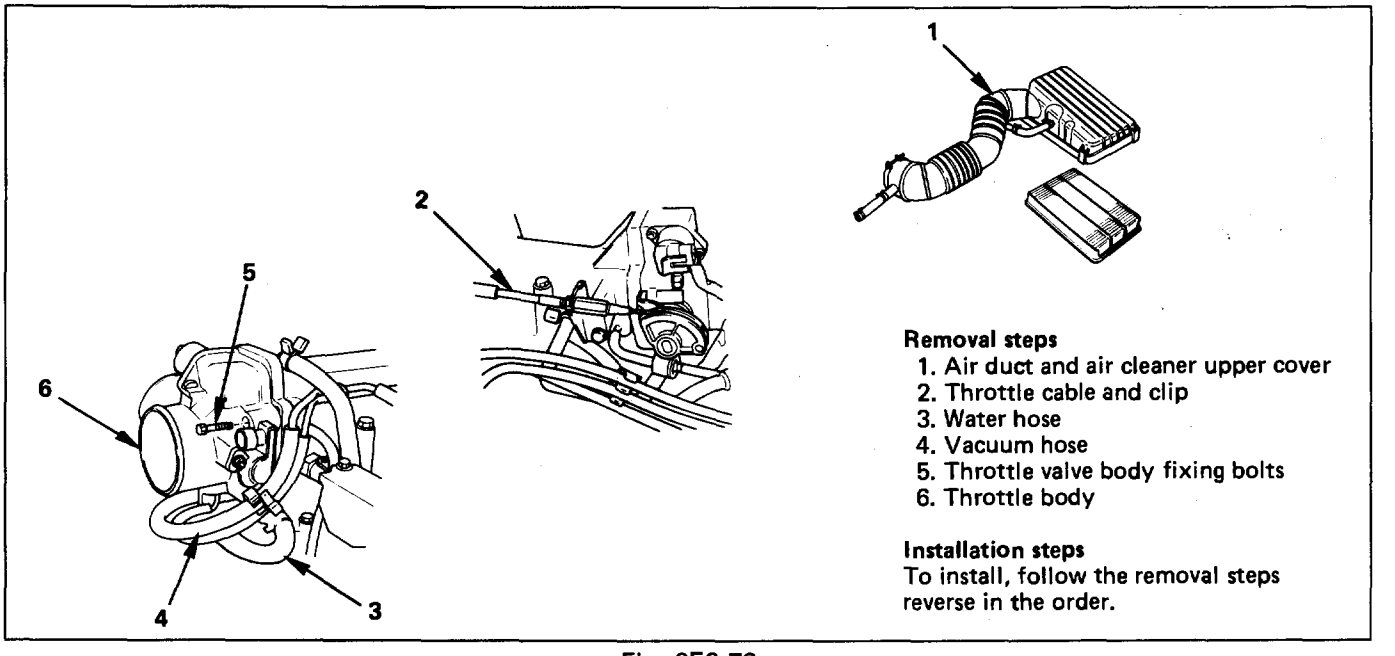

Fig. 6E2-79

REMOVAL

Preparation:
- Battery negative cable.
- Drain engine coolant.

1. **Air duct and air cleaner upper cover**
2. **Throttle cable and clip**
3. **Water hose**
   - Disconnect from TB.
4. **Vacuum hose**
   - Disconnect from TB.
5. **TB fixing bolts**
6. **TB**

NOTE:
Use care in cleaning old gasket material from machined aluminum surfaces. Sharp tools may damage sealing surfaces.
- Gasket sealing surfaces.

INSTALLATION

6. **TB**
5. **TB fixing bolts**
   - Tighten the fixing bolts to the specified torque.

Torque	N·m (lb·ft)	22 (16)

4. **Vacuum hose**
   - Reconnect to TB.

3. **Water hoses**
   - Reconnect to throttle body.
2. **Throttle cable and clip**
1. **Air duct and air cleaner upper cover**

THROTTLE POSITION (TP) SENSOR

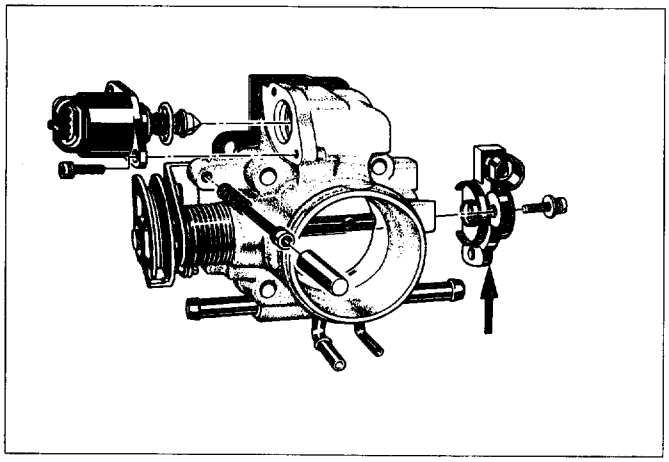

Fig. 6E2-80

REMOVAL

Preparation: • Battery negative cable.

1. **Throttle position (TP) sensor electrical connector**
2. **TP sensor attaching screw**
3. **TP sensor**
   - The TP sensor is an electrical component and must not be soaked in any liquid cleaner or solvent, as damage may result.

INSTALLATION

3. **TP sensor**
   - With throttle body closed, position TP sensor on throttle shaft, then align with screw holes.
2. **TP sensor attaching screw**
   - Tighten the attaching screw to the specified torque.

Torque	N·m (lb·in)	2 (18)

1. **TP sensor electrical connector**

IDLE AIR CONTROL (IAC) VALVE

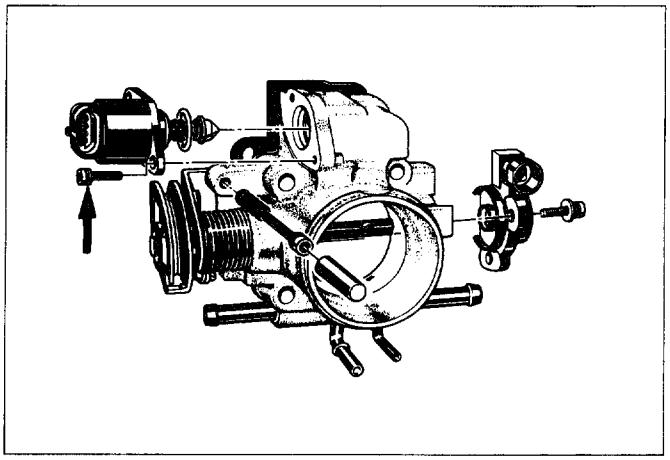

Fig. 6E2-81

REMOVAL

Preparation: • Battery negative cable.

1. **Idle air control (IAC) valve electrical connector**
2. **IAC valve attaching screw**
3. **IAC valve assembly**
   On IAC valves that have been in service: Do not push or pull on the IAC valve pintle. The force required to move the pintle may damage the threads on the worm drive. Also, Do not soak the IAC valve in any liquid cleaner or solvent, as damage may result.

CLEANING AND INSPECTION

- Clean IAC valve O-ring sealing surface, pintle valve seat and air passage.
  - Use carburetor cleaner and a parts cleaning brush to remove carbon deposits. Do Not use a cleaner that contains methyl ethyl ketone. It is an extremely strong solvent, and not necessary for this type of deposit.
  - Shiny spots on the pintle or seat are normal, and do not indicate misalignment or a bent pintle shaft.
  - If air passage has heavy deposits, remove throttle body for complete cleaning.
- Inspect IAC valve O-ring for cuts, cracks or distortion. Replace if damaged.

CAUTION:

- If installing a new IAC valve, be sure to replace it with an identical part. IAC valve pintle shape and diameter are designed for the specific application.

Measure (If Installing a New Idle Air Control (IAC) Valve) (Fig. 6E2-82)

- Distance between tip of idle air control (IAC) valve pintle and mounting flange.
  - If greater than 28 mm, finger pressure to slowly retract the pintle. The force required to retract the pintle of a new valve will not cause damage to the valve.

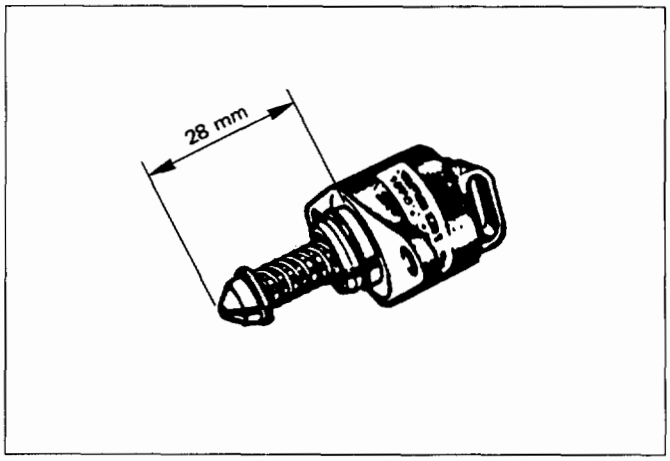

Fig. 6E2-82

INSTALLATION

3. **IAC valve assembly**
2. **IAC valve attaching screw**
1. **IAC valve electrical connector**

MINIMUM THROTTLE BODY (TB) POSITION CHECK

The minimum throttle body (TB) position (throttle stop screw) adjustment for the 3.2L should not be considered the "minimum idle speed", as on other fuel injected engines. Low internal friction and provision for slight production variations and various operation altitudes resulted in a calibrated minimum TB position which is too low to allow most engines to idle. The adjustment is preset at the factory and no further adjustment should be necessary.

If there is a complaint of high idle speed, vacuum leaks should be considered the most likely cause. Because the Engine Control Module (ECM) "learns" Idle IAC, it is even less likely that a stalling complaint would be due to an incorrect minimum TB position. In either case, the "Symptoms," Section "6E2-B" and IAC valve check CHART C-2C should be referred to.

If it is determined that the minimum TB position is suspect, be sure IAC valve is not "lost" (not actually at the location indicated by current IAC "counts"). The IAC valve could be "lost" if ECM power has been interrupted with the ignition "ON", or the IAC valve has been disconnected with the engine running since the last reset, as described previously in this section in the "IAC Valve Assembly" general description.

The minimum TB position may be checked using the following procedure.

1. Block drive wheels, and apply parking brake.
2. Connect "Scan tool" to the data link connector.
3. Start engine and allow to reach operating temperature (about 90°C) and "Closed Loop".
4. A/T - shift to DRIVE ("D") and then back to neutral ("N").
5. Select power steering pressure switch input on "Scan tool". With air conditioning and all electrical accessories "OFF", transmission in natural, "Scan tool" should read "OFF" or "NORMAL". (If not, refer to CHART C-1E to diagnose and repair faulty power steering pressure switch circuit before proceeding). Allow idle to stabilize.
6. Select IAC valve display on "Scan tool", and read IAC valve counts. If between 5-45 counts, the minimum TB position adjustment is acceptable. It is important to allow idle speed to stabilize to assure correct counts are determined.
   If counts in step 6 are too low, check for intake air (vacuum) leaks at hoses, TB and intake manifold or damaged throttle lever and correct as necessary. Also, refer to CHART C-2C facing page "Diagnostic Aids". If no vacuum leaks or other cause of excessive air into the intake are found, it may be necessary to replace the TB to correct the low idle speed problem. Refer to "TB Replacement" in this section.
   If counts in Step 6 are too high, check for damaged throttle lever or airflow restriction by the TB. If no problem is evident, remove inlet air duct at the TB, and clean residue from inside of TB bore and from edges of TB using carburetor cleaner and a shop towel. (Do Not use a cleaner that contains methyl ethyl ketone. It is an extremely strong solvent, and not necessary for this type of deposit). Re-check "Scan tool" IAC valve counts, per the preceding procedure.
   If counts are still too high it may be necessary to replace the IAC valve or the TB assembly, If no vacuum leaks are indicated or engine loads are present.

Minimum Throttle Body (TB) Position (Non—Adjustable)

CAUTION:

- It is extremely unlikely that this adjustment will ever be necessary on a TB that has not been tampered with after production! If idle revolution per minute is low, you may need to replace the TB to correct the low idle speed.

CHART C-2A

INJECTOR BALANCE TEST

The injector balance tester is a tool used to turn the injector on for a precise amount of time, thus spraying a measured amount of fuel into the manifold. This causes a drop in fuel rail pressure that we can record and compare between each injector. All injectors should have the same amount of pressure drop (± 10 kPa). Any injector with a pressure drop that is 10 kPa (or more) greater or less than the average drop of the other injectors should be considered faulty and replaced.

NOTE: It will be necessary to remove the intake plenum to perform this procedure. Refer to intake plenum remove procedure in this section. It will also be necessary to install the Intake Manifold Diagnostic Plate J 39185 to enable the engine to be run with the plenum removed. Refer to Chart A-8 in Section "6E2-A" of this service manual.

STEP 1

Engine "cool down" period (10 minutes) is necessary to avoid irregular readings due to "Hot Soak" fuel boiling. With ignition "OFF" connect fuel gauge J 347301 or equivalent to fuel pressure tap. Wrap a shop towel around fitting while connecting gage to avoid fuel spillage. Refer to Chart A-7 in Section 6E2-A, Page 1 of 3.
Disconnect harness connectors at all injectors, and connect injector tester J 34730-3, or equivalent, to one injector. Follow manufacturers instructions for use of adaptor harness. Ignition must be "OFF" at least 10 seconds to complete engine control module shutdown cycle. Fuel pump should run about 2 seconds after ignition is turned "ON". At this point, insert clear tubing attached to vent valve into a operation. Repeat this step until all air is bled from gauge.

STEP 2

Turn ignition "OFF" for 10 seconds and then "ON" again to get fuel pressure to its maximum. Record this initial pressure reading. Energize tester one time and note pressure drop at its lowest point (Disregard any slight pressure increase after drop hits low point). By subtracting this second pressure reading from the initial pressure, we have the actual amount of injector pressure drop.

STEP 3

Repeat step 2 on each injector and compare the amount of drop. Usually, good injectors will have virtually the same drop. Retest any injector that has a pressure difference of 10 kPa, either more or less than the average of the other injectors on the engine. Replace any injector that also fails the retest. If the pressure drop of all injectors is within 10 kPa of this average, the injectors appear to be following properly.
Reconnect them and review "Symptoms", Section "6E3-B".

NOTE: The entire test should **NOT** be repeated more than once without running the engine to prevent flooding. (This includes any retest on faulty injectors). To run the engine with the intake plenum removed use the Intake Manifold Diagnostic Plate.

CHART C-2A

INJECTOR BALANCE TEST

NOTE: The entire test should **NOT** be repeated more than once without running the engine to prevent flooding. (This includes any retest on faulty injectors).

The fuel pressure test in Section "A" Chart A-7, should be completed prior to this test.

Step 1. If engine is at operating temperature, allow a 10 minute "cool down" period then connect fuel pressure gauge and injector tester.
1. Ignition "OFF".
2. Connect fuel pressure gauge and injector tester.
3. Ignition "ON".
4. Bleed off air gauge. Repeat until all air is bled from gauge.

Step 2. Run test:
1. Ignition "OFF" for 10 seconds.
2. Ignition "ON". Record gauge pressure. (Pressure must hold steady, if not see the Fuel System diagnosis, Chart A-7, in Section "A").
3. Turn injector on, by depressing button on injector tester, and note pressure at the instant the gauge needle stops.

Step 3.
1. Repeat step 2 on all injectors and record pressure drop on each. Retest injectors that appear faulty (Any injectors that have a 10 kPa (1.5 psi) difference, either more or less, in pressure from the average). If no problem is found, review "symptoms" Section "B".

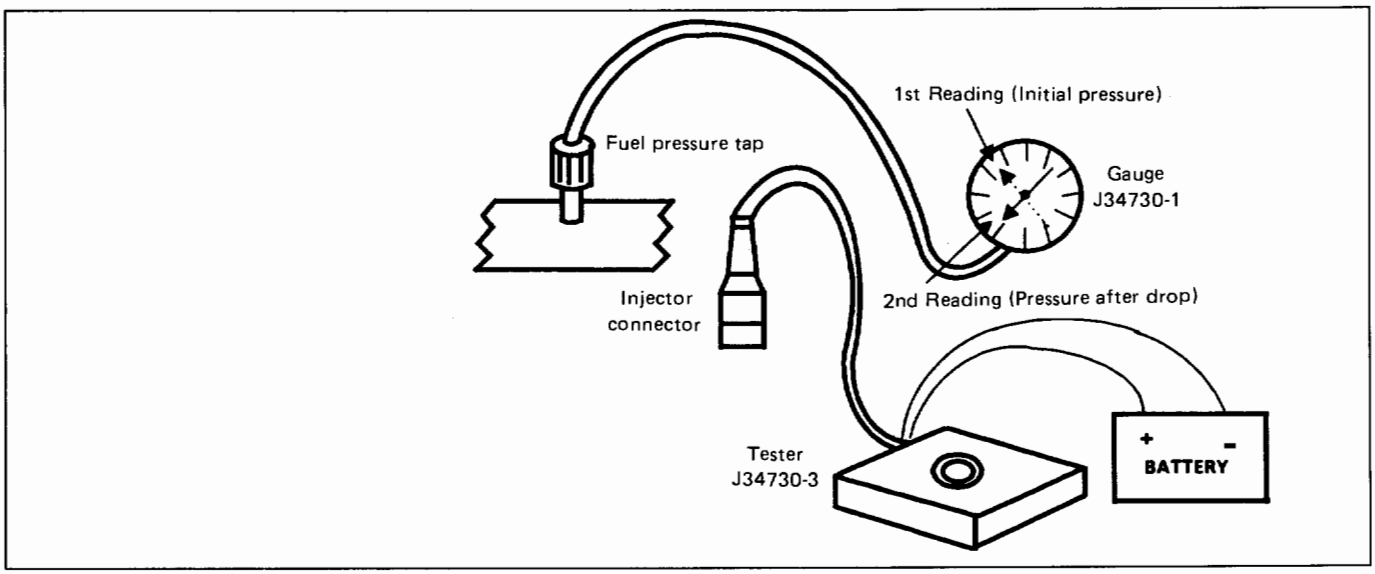

Fig. 6E2-83

EXAMPLE

CYLINDER	1	2	3	4	5	6	7	8
1ST READING	293 kPa (43 psi)	293 kPa (43 psi)	293 kPa (43 psi)	293 kPa (43 psi)	293 kPa (43 psi)	293 kPa (43 psi)	293 kPa (43 psi)	293 kPa (43 psi)
2ND READING	131 kPa (19 psi)	131 kPa (19 psi)	131 kPa (19 psi)	115 kPa (17 psi)	131 kPa (19 psi)	145 kPa (21 psi)	131 kPa (19 psi)	131 kPa (19 psi)
AMOUNT OF DROP	162 kPa (24 psi)	162 kPa (24 psi)	162 kPa (24 psi)	178 kPa (26 psi)	162 kPa (24 psi)	148 kPa (21 psi)	162 kPa (24 psi)	162 kPa (24 psi)
	OK	OK	OK	FAULTY, RICH (TOO MUCH FUEL DROP)	OK	FAULTY, LEAN (TOO LITTLE FUEL DROP)	OK	OK

CHART C-2C

IDLE AIR CONTROL (IAC) SYSTEM CHECK

Circuit Description:

The engine control module (ECM) controls engine idle speed with idler air control (IAC) valve. To increase idle speed, the ECM retracts the IAC valve pintle away from its seat, allowing more air to bypass the throttle bore. To decrease idle speed, it extends the IAC valve pintle towards its seat, reducing bypass air flow. A "Scan tool" will read the ECM commands to the IAC valve in counts. Higher counts indicate more air bypass (higher idle). Lower counts indicate less air is allowed to bypass (lower idle).

Test Description:

Number below refer to circled numbers on the diagnostic chart.

1. The IAC tester is used to extend and retract the IAC valve. Valve movement is verified by an engine speed change. If no change in engine speed occurs, the valve can be retested when removed from the throttle body.
2. This step checks the quality of the IAC movement in step 1. Between 700 revolution per minute (rpm) and about 1500 rpm, the engine speed should change smoothly with each flash of the tester light in both extend and retract. If the IAC valve is retracted beyond the control range (about 1500 rpm), it may take many flashes in the extend position before engine speed will begin to drop. This is normal on certain engines, fully extending IAC may cause engine stall. This may be normal.
3. Steps 1 and 2 verified proper IAC valve operation. This step checks the IAC circuits. Each lamp on the node light should flash red and green while the IAC valve is cycled. While the sequence of color is not important if either light "OFF" or does not flash red and green, check the circuits for faults, beginning with poor terminal contacts.

Diagnostic Aids:

A slow, unstable, or fast idle may be caused by a non-IAC system problem that cannot overcome by the IAC valve. Out of control range IAC "Scan tool" counts will be above 60 if idle is too low, and zero counts if idle is too high. The following checks should be made to repair a non-IAC system problem.

- **Vacuum Leak (High Idle)**
  If idle is too high, stop the engine. Fully extend (low) IAC with tester.
  Start engine. If idle speed is above 800 rpm, locate and correct vacuum leak including PCV system. Also check for binding of throttle blade or linkage.
- **Lean heated oxygen sensor signal (High Air/Fuel Ratio)**
  The idle speed may be too high or too low. Engine speed may vary up and down and disconnecting the IAC valve does not help. Diagnostic trouble code 44 may be set. "Scan tool" oxygen (O2) voltage will be less than 100 mV (.1 volt). Check for low regulated fuel pressure, water in fuel, or a restricted injector.
- **Rich heated oxygen sensor signal (Low Air/Fuel Ratio)**
  The idle speed will be too low. "Scan tool" IAC counts will usually be above 80. System is obviously rich and may exhibit black smoke in exhaust.
  "Scan tool" O2 voltage will be fixed about 750 mV (.75 volt).
  Check for high fuel pressure, leaking or sticking injector. Silicon contaminated heated oxygen sensor will "Scan tool" an O2 voltage slow to respond.
- **Throttle Body**
  Remove IAC valve and inspect bore for foreign material.
- **IAC Valve Electrical Connections**
  IAC valve connections should be carefully checked for proper contact.
- **PCV Valve**
  An incorrect or faulty PCV valve may result in an incorrect idle speed.
- Refer to "Rough, Unstable, Incorrect Idle or Stalling" in "Symptoms," Section "6E2-B".
- If intermittent poor driveability or idle symptoms are resolved by disconnecting the IAC, carefully recheck connections, valve terminal resistance, or replace IAC.

CHART C-2C

IDLE AIR CONTROL (IAC) SYSTEM CHECK

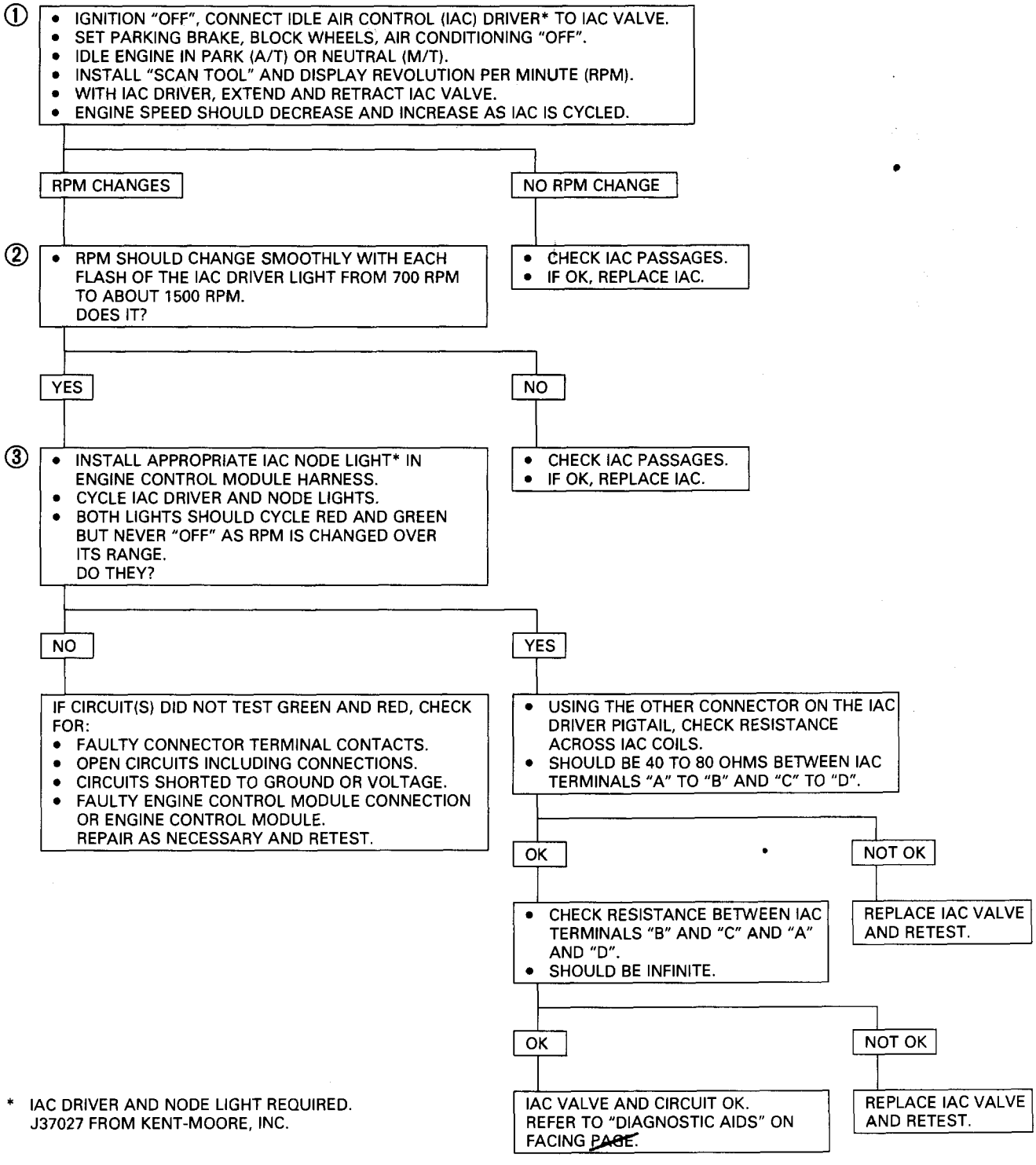

* IAC DRIVER AND NODE LIGHT REQUIRED.
J37027 FROM KENT-MOORE, INC.

CLEAR DIAGNOSTIC TROUBLE CODES AND CONFIRM "CLOSED LOOP" OPERATION AND NORMAL "CHECK ENGINE" MALFUNCTION INDICATOR LAMP OPERATION.

CHART C-2D

INDUCTION AIR CONTROL PLATE SYSTEM CHECK (DOHC ONLY)

Circuit Description:

The Induction Air Control Plate system is used to control air to the Induction intake valves when engine speed is between 2950 ~ 4150. For this system, the length of the intake pipe is changed to provide a high torque throughout the entire field by means of the "ON" and "OFF" operations of the vacuum switching solenoid mounted to the common chamber duct.

This system consists of the Induction air control plate mounted in the Common chamber duct and a vacuum operated diaphragm which moves the Induction air control plate linkage. The vacuum to the diaphragm is turned "ON" or "OFF" by a vacuum switching solenoid which is electrically operated by the Engine Control Module.

Test Description:

Number(s) below refer to circled number(s) on the diagnostic chart.

1. Without the proper vacuum being available at the solenoid the system will not function properly.
2. When the ignition is "ON" and the engine not running the solenoid should not be energized. Since the solenoid is normally open the vacuum should be able to pass to the actuator.
3. With the diagnostic test terminal grounded the engine control module should ground WHT/BLU which should energize the solenoid and not allow vacuum to pass to the actuator.
4. This step, as well as the following steps, check for circuit continuity.

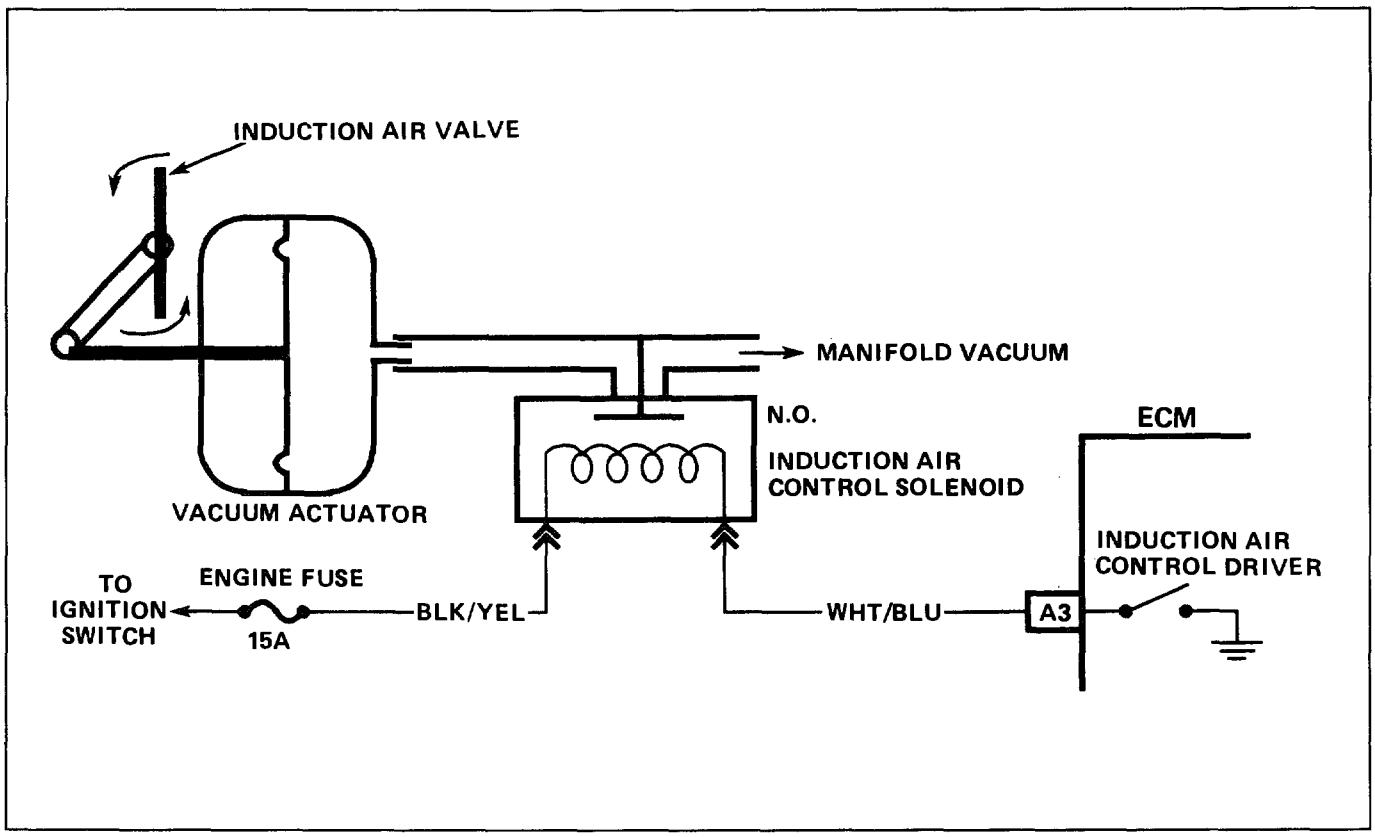

Fig. 6E2-85

CHART C-2D

INDUCTION AIR CONTROL PLATE SYSTEM CHECK

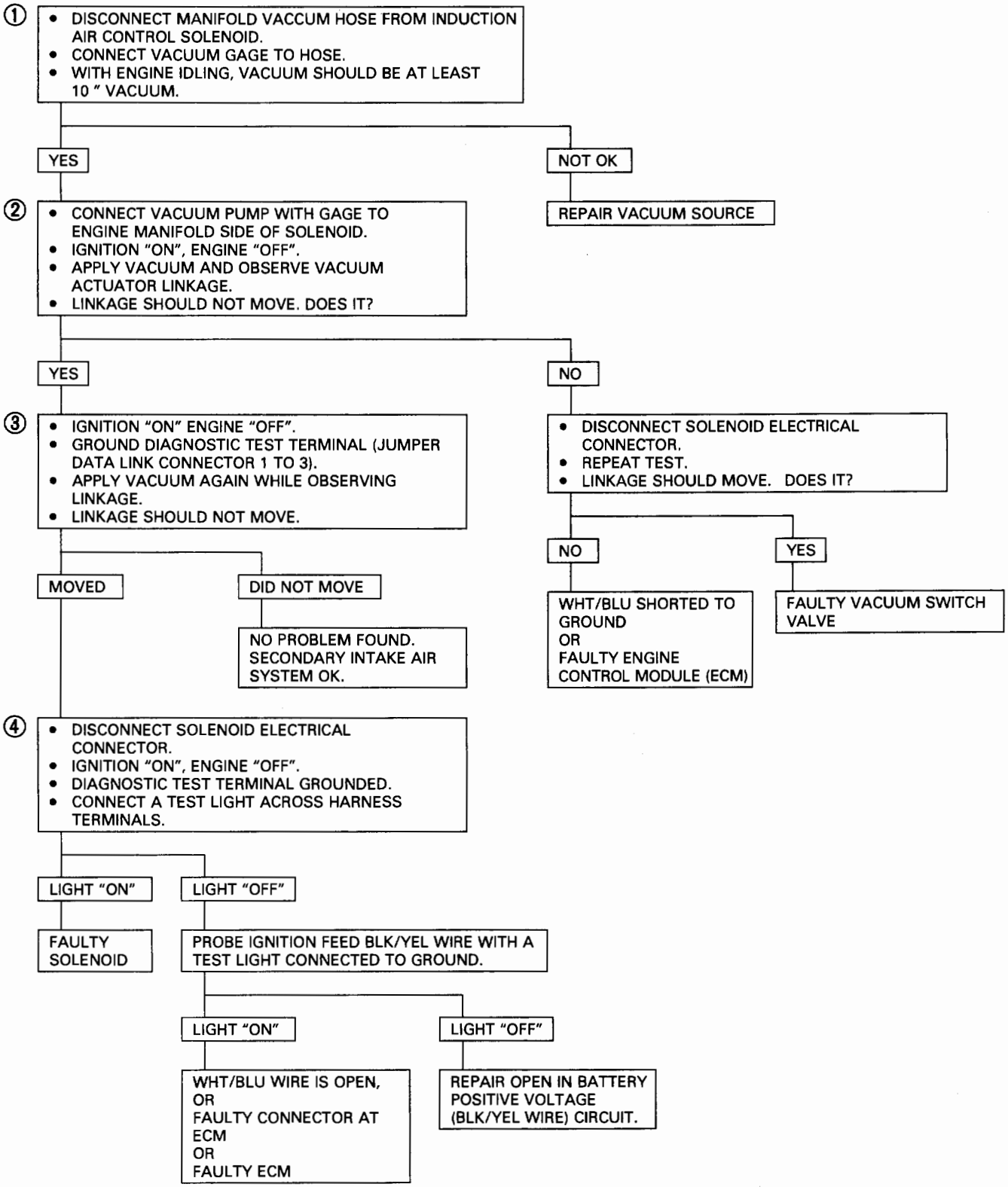

SECTION C-3

EVAPORATIVE EMISSION (EVAP) CONTROL SYSTEM
(ELECTRONICALLY CONTROLLED)

CONTENTS

General Description . . . . . 6E2—134
Purpose . . . . . 6E2—134
Vapor Canister . . . . . 6E2—134
Evaporative Emission (EVAP) Control System . . 6E2—134
Results of Incorrect Operation . . . . . 6E2—135
Diagnosis . . . . . 6E2—135
Visual Check of Canister . . . . . 6E2—135
On-Vehicle service . . . . . 6E2—135
Fuel Vapor Canister . . . . . 6E2—135
Canister Hoses . . . . . 6E2—135
Chart C-3 Evaporate Emission Canister Purge Valve . . . . . 6E2—136

GENERAL DESCRIPTION

PURPOSE

The basic Evaporative Emission (EVAP) Control System used on all vehicles is the charcoal canister storage method. This method transfers fuel vapor from the fuel tank to an activated carbon (charcoal) storage device (canister) to hold the vapors when the vehicle is not operating. When the engine is running, the fuel vapor is purged from the carbon element by intake air flow and consumed in the normal combustion process.

VAPOR CANISTER

Gasoline vapors from the fuel tank flow into the tube labeled tank. Any liquid fuel goes into a reservoir in the bottom of the canister to protect the integrity of the carbon bed above (Fig 6E2-86). These vapors are absorbed into the carbon. The canister is purged when the engine is running or commanded by Engine Control Module (ECM). Ambient air is allowed into the canister through the air tube in the top. The air mixes with the vapor and the mixture is drawn into the intake manifold.

EVAPORATIVE EMISSION (EVAP) CONTROL SYSTEM

The solenoid used with this canister uses Vacuum Switch Valve to control purge. The ECM opens and closes the solenoid to control purge.
The ECM operates a Normally Closed (N/C) solenoid valve which controls the vacuum to purge the charcoal canister. Under cold engine or idle conditions, the solenoid is not energized by the ECM, which blocks vacuum to purge the canister.

The ECM energizes the solenoid valve and allows purge when:

- Engine is warm above 69°C (156°F).
- After the engine has been running a specified time.

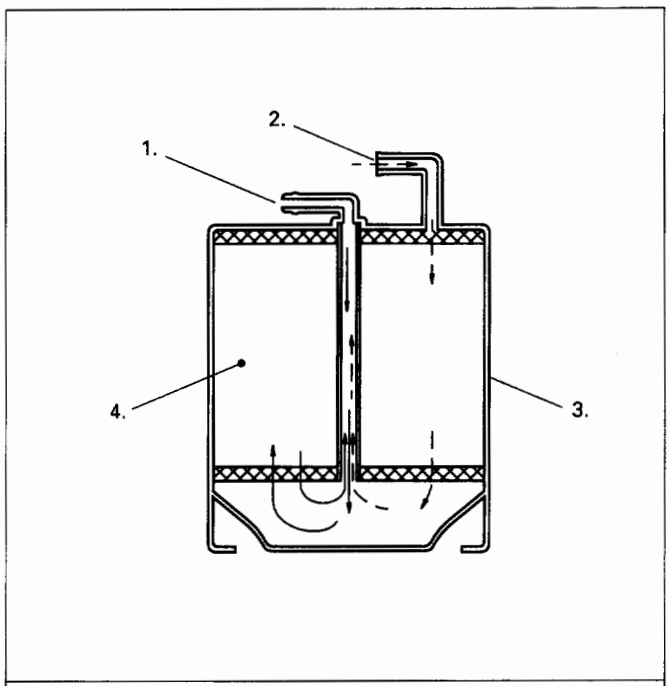

1. Vapor from Fuel Tank 4. Carbon
2. Evaporate Emission Canister Purge Vacuum
3. Canister Body

Fig. 6E2-86

- Throttle position is above 7% throttle position sensor.

RESULTS OF INCORRECT OPERATION

Poor idle, stalling and poor driveability can be caused by:

- Inoperative purge solenoid.
- Damaged canister.
- Hoses split, cracked and/or not connected to the proper tubes.

Evidence of fuel loss or fuel vapor odor can be caused by:

- Liquid fuel leaking from fuel lines, or fuel pump.
- Cracked or damaged canister.
- Disconnected, misrouted, kinked, deteriorated or damaged vapor hoses, or control hoses.

If the solenoid is always open, the canister can purge to the intake manifold at all times. This can allow extra fuel at idle or during warm-up, which can cause rough or unstable idle, or too rich operation.
If the solenoid is always closed, the canister can become over-loaded, resulting in fuel odor.

DIAGNOSIS

The evaporate emission canister purge solenoid operation is covered in CHART C-3 at the end of this section.

VISUAL CHECK OF CANISTER

Cracked or damaged, replace canister.

ON-VEHICLE SERVICE

FUEL VAPOR CANISTER

Remove or Disconnect

1. Hoses from canister. Mark hoses to install on new canister.
2. Canister.

Install or Connect

1. Canister as removed.
2. Hoses. Make sure connetions are correct.

CANISTER HOSES

Refer to Vehicle Emission Control Information label for routing of canister hoses. When replacing hoses, use 6148M or its equivalent.

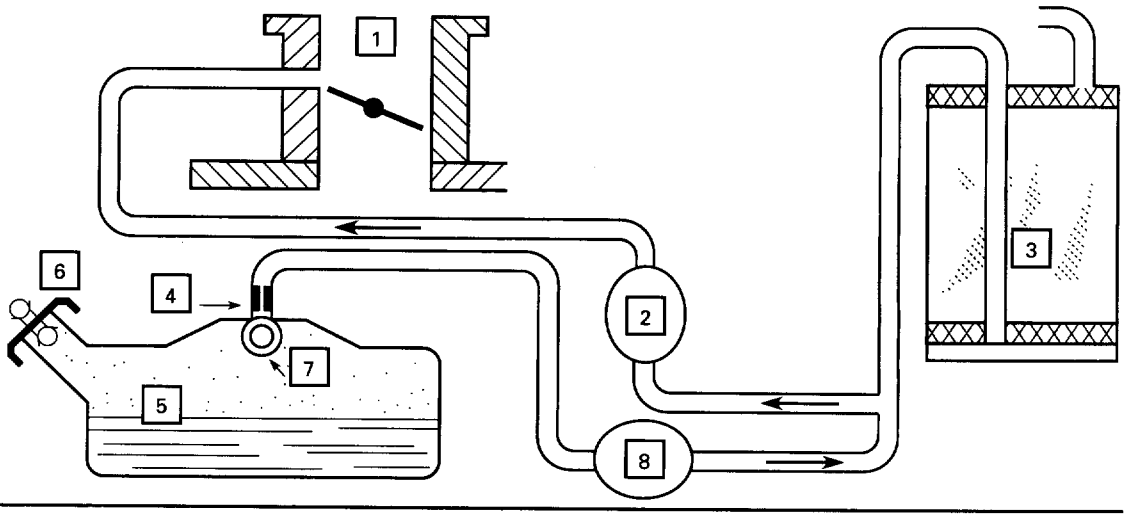

1 THROTTLE BODY	4 VAPOR RESTRICTION	7 IN-TANK FUEL VAPOR PRESSURE CONTROL VALVE
2 FUEL VAPOR PURGE CONTROL SOLENOID	5 FUEL TANK	8 CHECK & RELIEF VALVE
3 FUEL VAPOR CANISTER	6 PRESSURE/VACUUM VENTED	

Fig. 6E2-87

CHART C-3

EVAPORATIVE EMISSION CANISTER PURGE VALVE CHECK

Circuit Description:

Evaporative emission canister purge is controlled by a solenoid that allows manifold and/or ported vacuum to purge the canister when energized. The Engine Control Module (ECM) supplies a ground to energize the solenoid (purge "ON"). The purge solenoid control by the ECM is turned "ON" or "OFF" under specific engine conditions. The purge solenoid is turned "ON" when all of the following conditions are met.

- Data link connector is ungrounded.
- Engine run time after start more than 20 seconds.
- Engine coolant temperature above 60°C.
- Vehicle speed is above 9 mile per hour.

Also, if the diagnostic test terminal is grounded with the engine stopped, the purge solenoid is energized (purge "ON").

Test Description:

Numbers below refer to circled numbers on the diagnostic chart.

1. Check to see if the solenoid is opened or closed. The solenoid is normally de-energized in this step, so it should be closed.
2. Checks to determine if solenoid was open due to electrical CKT problem or defective solenoid.
3. Completes functional check by grounding test terminal. This should normally energize the solenoid opening the valve which should allow the vacuum to drop (purge "ON").

Diagnostic Aids:

Make a visual check of vacuum hose(s). Check throttle body for possible cracked, or plugged vacuum block. Malfunction indicator lamp for possible mechanical problem.

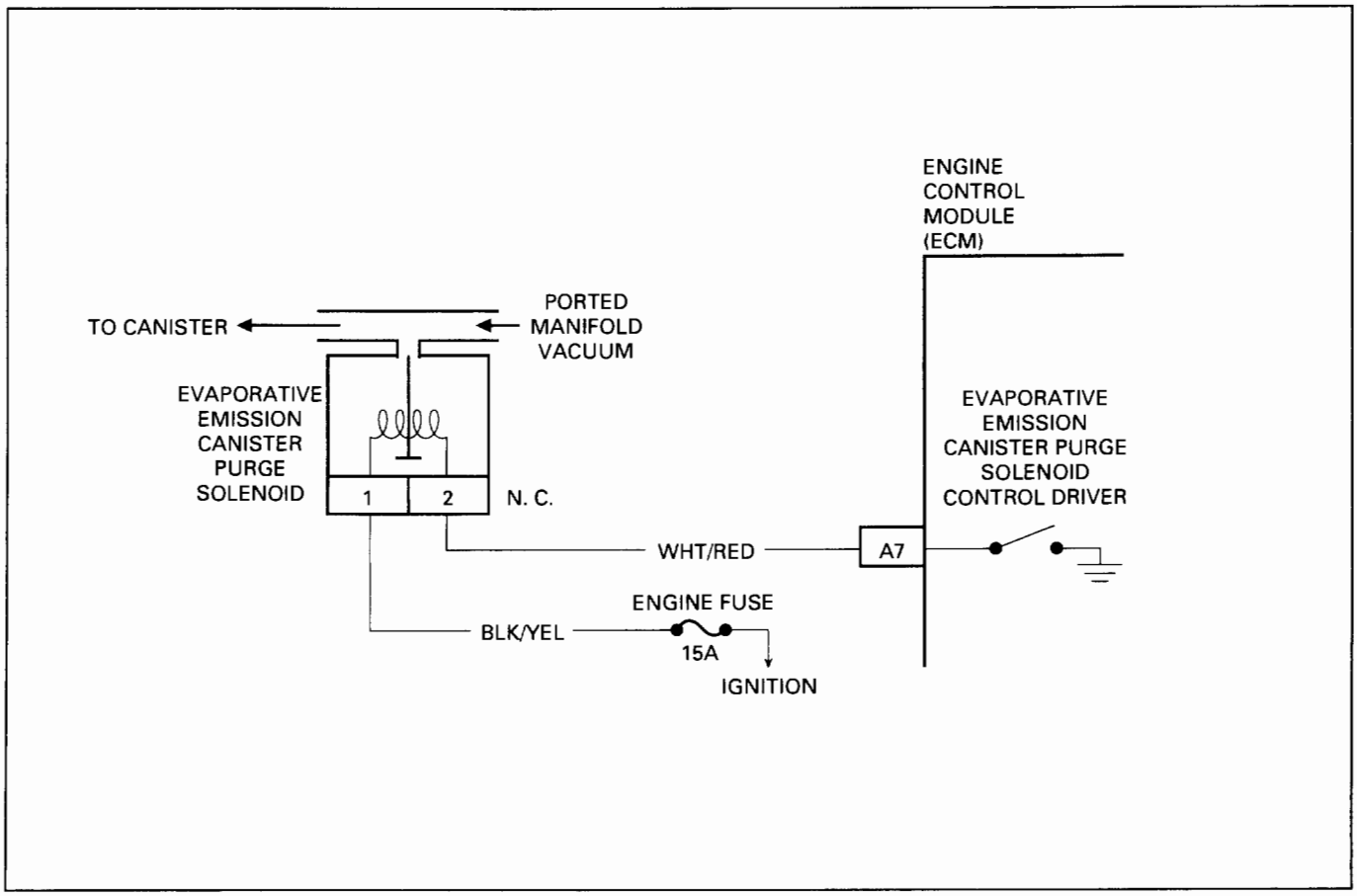

Fig. 6E2-88

CHART C-3

EVAPORATIVE EMISSION CANISTER PURGE VALVE CHECK

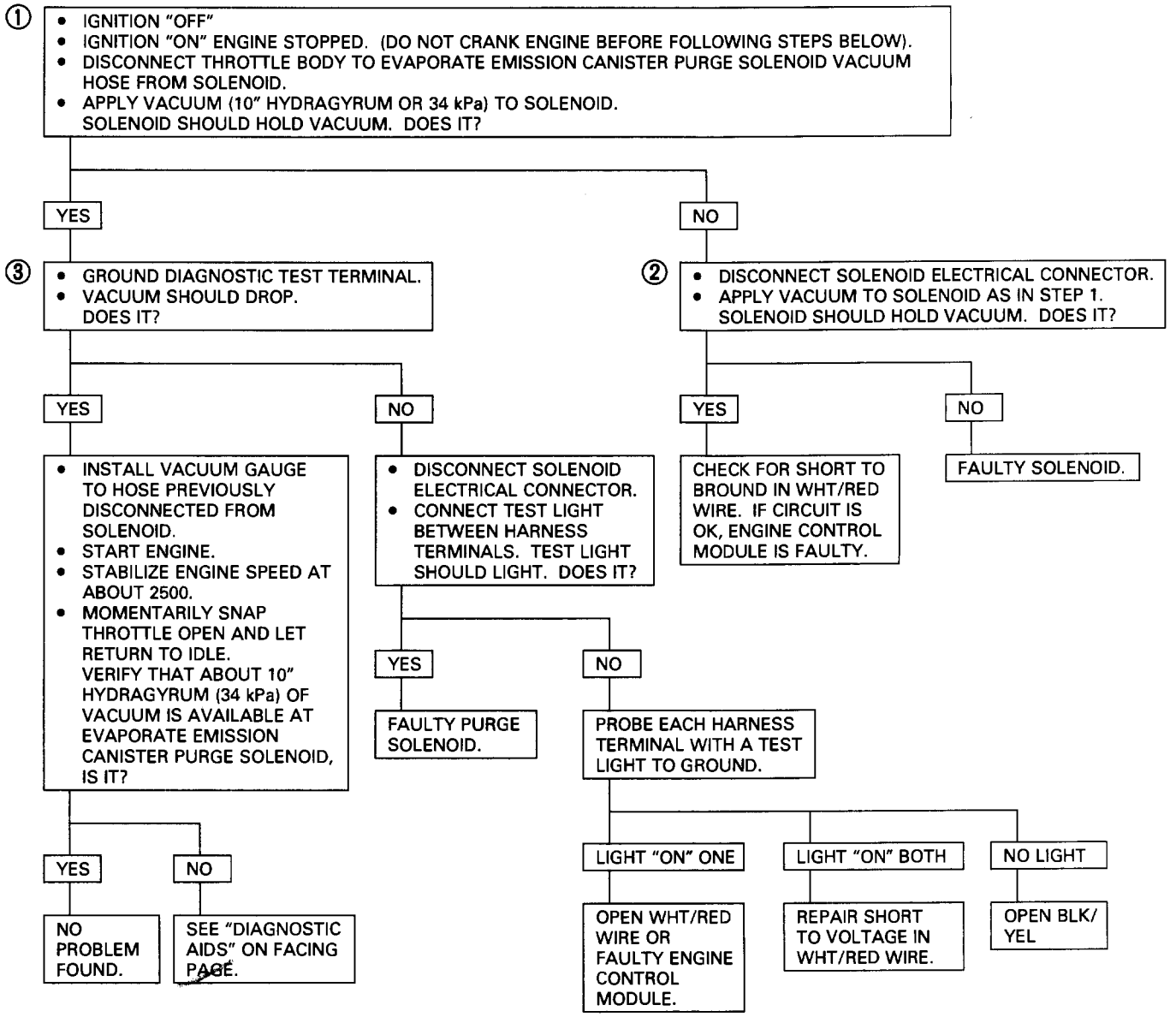

CLEAR DIAGNOSTIC TROUBLE CODES AND CONFIRM "CLOSED LOOP" OPERATION AND NORMAL "CHECK ENGINE" MALFUNCTION INDICATOR LAMP OPERATION.

SECTION C4

ELECTRONIC IGNITION (EI) SYSTEM/IGNITION CONTROL (IC)

CONTENTS

General Description 6E2-138
Purpose 6E2-138
Operation 6E2-138
Results of Incorrect Operation 6E2-139
How diagnostic trouble code (DTC) 42 is Determined 6E2-139
Diagnosis 6E2-139
Diagnostic trouble code (DTC) 12 . . . . . 6E2-139
On-Vechicle Service 6E2-139
Electronic Ignition (EI) Assembly 6E2-139
Crankshaft Position (CKP) Sensor 6E2-140
Ignition Coil 6E2-140
Ignition Control Module (ICM) 6E2-140
Ignition Timing 6E2-140
Chart C-4D-1 Electronic Ignition (EI) misfire at Idle 6E2-142
Chart C-4D-2 Electronic Ignition (EI) misfire Under Load 6E2-144

GENERAL DESCRIPTION

PURPOSE

The Electronic Ignition (EI) system controls fuel combustion by providing a spark to ignite the compressed air/fuel mixture at the correct time. To provide improved engine performance, fuel economy, and control of exhaust emissions, the Engine Control Module (ECM) controls spark advance timing with the Ignition Control (IC) system.

OPERATION

The "EI" is a "waste spark" system in which 2 plugs are fired simultaneously from one coil. The spark plugs are paired to a coil, so that when both fire, one cylinder is on the compression stroke and the other is on exhaust. There is litle resistance across the plug gap on the exhaust stroke, so the plug requires very little voltage to fire, thereby providing the other plug (compression) with maximum available voltage.

The system uses a magnetic Crankshaft Position (CKP) sensor which protrudes into the block, within approximately .050" of the crankshaft reluctor. The reluctor is a special wheel cast on the crankshaft that has seven machined slots, six of which are equally spaced 60° apart). The seventh slot is spaced 10° from one of the other slots. As the reluctor rotates with the crankshaft, the slots change the magnetic field of the sensor, causing an induced voltage pulse.

By counting the time between pulses, the Ignition Control Module (ICM) can recognize the pulse of the seventh slot (sync pulse). Based on this sync pulse, the module sends the reference signal to the ECM to calculate CKP (used to fire coils in correct sequence) and engine speed.

To properly control timing, the ECM relies on the following information:

- Engine load (manifold absolute pressure or vacuum).
- Atmospheric (barometric) pressure.
- Engine temperature.
- Intake air temperature.
- CKP
- Engine speed (revolution per minute).

The ignition control system consisits of the "EI" assembly (coils, module, and CKP sensor), ECM and connecting wires. These circuits perform the following functions:

- **"EI" reference**
  The CKP sensor sends a signal to the ICM which generates a reference pulse which is sent to the ECM. The ECM uses this signal to calculate CKP and engine speed (also used to trigger the injector).
- **Reference ground (GND)**
  This wire is GNd through the module and makes sure the GNd circuit has no voltage drop between the ICM and the ECM, which if open, could affect performance.
- **Bypass**
  At about 400 revolution per minute, the ECM applies 5 volts to this circuit to switch spark timing control from the ICM to the ECM. An open or grounded bypass circuit will set a diagnostic trouble code 42 and the engine will run at base timing, plus a small amount of advance built into the ICM.
- **IGNITION CONTROL (IC)**
  The ECM uses this circuit (when bypass voltage is applied) to trigger the "EI" module. The ECM uses the CKP to base its calculation of the amount of spark advance needed under present engine conditions.

RESULTS OF INCORRECT OPERATION

An open or ground in the Ignition Control (IC) or bypass circuits will set a Diagnostic Trouble Code (DTC) 42 and cause the engine to run on the Ignition Control Module (ICM) timing.

The Engine Control Module (ECM) uses information from the Intake Air Temperature (IAT) and engine coolant sensors in addition to revolution per minute (rpm) to calculate spark advance as follows:

- Cold engine = more spark advance.
- Engine under minimum load based on rpm and low amount of air flow = more spark advance.
- Hot engine = less spark advance.
- Engine under heavy load based on rpm and high air flow = less spark advance.

HOW DIAGNOSTIC TROUBLE CODE (DTC) 42 IS DETERMINED

When the system is running on the ICM, that is, no voltage on the bypass line, the ICM grounds (GND) the IC signal. The ECM expects to see no voltage on the IC line during this condition. If it sees a voltage, it sets DTC 42 and will not go into the IC mode.

When the rpm for IC is reached (about 400 rpm) the ECM applies 5 volts to the bypass line and the IC should no longer be grounded in the ICM so the IC voltage should be varying.

An open in the IC circuit while running, will result in the engine continuing to run, but in a back-up ignition timing mode (module timing) at a calculated timing value and the malfunction indicator lamp will not be "ON".

If the IC circuit is shorted to GND, the "Check Engine" malfunction indicator lamp will be turned "ON", and a DTC 42 will be set and the engine will operate in module timing. Either condition may cause poor performance and reduced fuel economy.

If the bypass line is open or GND, the ICM will not switch to IC mode so the IC voltage will be low and DTC 42 will be set.

If the IC line is grounded, the ICM will switch to IC, but because the line is GND there will be no IC signal. A DTC 42 will be set.

DIAGNOSIS

If the engine cranks but will not run, CHART A-3 will be used to determine if the Electronic Ignition (EI) system is the cause of the problem or if it is another part of the fuel injection system.

If DTC 42 is set, that DTC chart should be used for diagnosis. If no DTC is set and the ignition system is suspected, use CHART C4-D ("EI" Misfire) for diagnosis.

DIAGNOSTIC TROUBLE CODE (DTC) 12

DTC 12 is used during the on-board diagnostic system check procedure to test the DTC display ability of the ECM. This diagnostic trouble code indicates that the ECM is not receiving the engine speed (REFERENCE) signal. This occurs with the ignition key "ON" and the engine not running.

The "reference" signal also triggers the fuel injection system. Without the "reference" signal the engine cannot run.

ON-VEHICLE SERVICE

ELECTRONIC IGNITION (EI) ASSEMBLY

REMOVE OR DISCONNECT

1. Negative battery cable
2. "EI" electrical connectors (3)
3. Spark plug wires. (Note wire positions to proper coils) (6)
4. "EI" assembly to bracket bolts (3)
5. "EI" assembly from Intake Plenum.

INSTALL OR CONNECT

1. "EI" assembly bracket to Intake Plenum
   Tighten bolts to 25 N·m (19 lb·ft)
2. Spark plug wires to correct spark plugs
3. "EI" electrical connectors
4. Negative battery cable

CRANKSHAFT POSITION (CKP) SENSOR

REMOVE OR DISCONNECT

1. Negative battery cable
2. Sensor electrical connector
3. Sensor bolts
4. Sensor from engine

INSPECT

- Sensor O-ring for wear, cracks or leakage. Replace if necessary. Lube new O-ring with engine oil before installing.

INSTALL OR CONNECT

1. Sensor in engine
2. Sensor bolt tighten to 10 Tighten bolts to 10 N·m (88 lb·in)
3. Sensor electrical connector
4. Negative battery cable

IGNITION COIL

REMOVE OR DISCONNECT

1. Coil retaining screws (2 each coil)
2. Coil(s) from module

INSTALL OR CONNECT

1. Coil(s) to module
2. Coil retaining screws

IGNITION CONTROL MODULE (ICM)

REMOVE OR DISCONNECT

1. Negative battery cable
2. Electronic ignition assembly from Intake Plenum. (See previous procedure)
3. Coils from assembly (Se previous procedure)
4. Module from assembly plate

INSTALL OR CONNECT

1. Module to assembly plate
2. Coils (See previous procedure)
3. "Electronic ignition" assembly to Intake Plenum (See previous procedure)
4. Negative battery cable

IGNITION TIMING

Because the reluctor is an integral part of the crankshaft and the crankshaft position sensor is mounted in a fixed position, timing adjustment is not possible.

MEMO

CHART C-4D-1

ELECTRONIC IGNITION (EI) MISFIRE AT IDLE

Circuit Description:

The electronic ignition system uses a waste spark method of distribution. For example, in this type of system the ignition control module triggers the #1/4 coil pair resulting in both #1 and #4 spark plugs firing at the same time #1 cylinder is on the compression stroke at the same time #4 is on the exhaust stroke, resulting in a lower energy requirement to fire #4 spark plug. This leaves the remainder of the high voltage to be used to fire #1 spark plug. On this vehicle, the crankshaft position sensor is mounted to the engine block and protrudes through the block to within approximately .05" of the crankshaft reluctor. Since the reluctor is a machined portion of the crankshaft and the crankshaft position sensor is mounted in a fixed position on the block, timing adjustments are not possible or necessary.

Test Description: Numbers below refer to circled numbers on the diagnostic chart.

① If the "Misfire" complaint exists under load only, the diagnostic chart on page 2 must be used. Engine speed should drop approximately equally on all plug leads.

② A spark test such as a ST-125 must be used because it is essential to verify adequate available secondary voltage at the spark plug. (25,000 volts).

③ If the spark jumps the test gap after grounding the opposite plug wire, it indicates excessive resistance in the plug which was Bypassed. A faulty or poor connection at that plug could also result in the miss condition. Also, check for carbon deposits inside the spark plug boot.

④ If carbon tracking is evident, replace coil and be sure plug wires relating to that coil are clean and tight. Excessive wire resistance or faulty connections could have caused the coil to be damaged.

⑤ If the no spark condition follows the suspected coil, that coil is faulty; otherwise, the ignition control module is the cause of no spark. This test could also be performed by substituting a known good coil for the one causing the no spark condition.

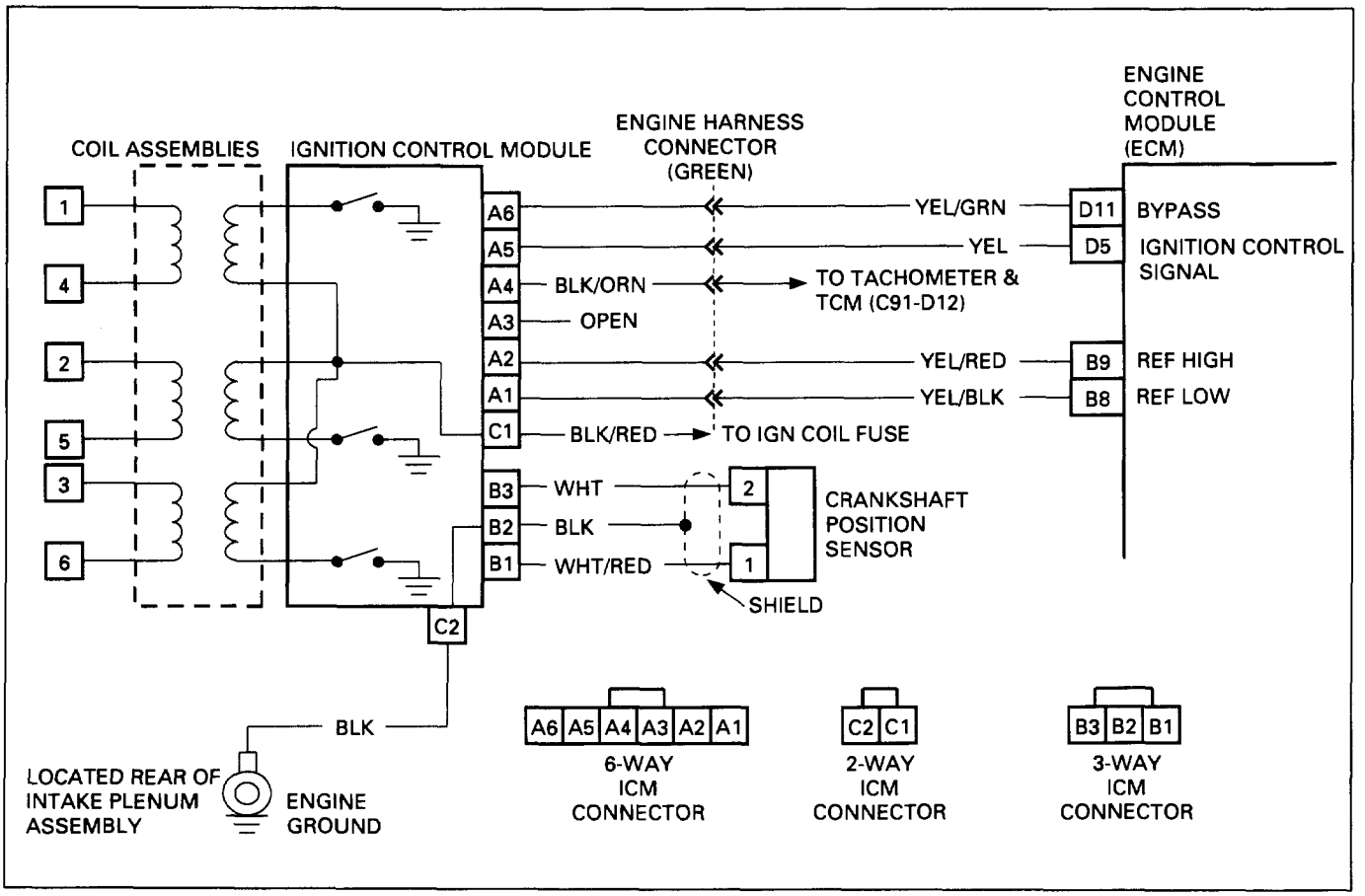

Fig. 6E2-89

CHART C-4D

ELECTRONIC IGNITION (EI) MISFIRE AT IDLE

①
- IF ENGINE MISFIRES UNDER LOAD ONLY, SEE CHART C-4D-2.
- ENGINE IDLING AT NORMAL OPERATING TEMPERATURE, DISCONNECT IDLE AIR CONTROL.
- MOMENTARILY DISCONNECT EACH SPARK PLUG LEAD, USING INSULATED PLIERS, WHILE OBSERVING ENGINE SPEED. SEE CAUTION★.
- ALL PLUG LEAD(S) SHOULD RESULT IN A REVOLUTION PER MINUTE DROP. DID THEY?

NO → ②

YES → SEE "ROUGH, UNSTABLE OR INCORRECT IDLE OR STALLING" IN SYMPTOMS ~~SECTION~~ "B".

②
- WITH IGNITION "OFF", INSTALL SPARK TESTER (ST-125) J-26792 OR EQUIVALENT ON PLUG LEAD(S) WHOSE REMOVAL DID NOT RESULT IN REVOLUTION PER MINUTE DROP.
- SPARK SHOULD JUMP TESTER GAP WHILE CRANKING ENGINE. DOES IT?

NO → ③

YES → CHECK FOR:
- FAULTY, WORN OR CRACKED SPARK PLUG(S).
- PLUG FOULING DUE TO ENGINE MECHANICAL FAULT.

IF SPARK PLUGS CHECK OUT OK, REFER TO "CUTS OUT, MISSES" IN SYMPTOMS ~~SECTION~~ "B".

③
- WITH IGNITION "OFF", GROUND THE OPPOSITE PLUG LEAD OF THE AFFECTED COIL AT SPARK PLUG.
- SPARK SHOULD JUMP TESTER GAP WHILE CRANKING ENGINE. DOES IT?

NO →
- CHECK THE RESISTANCE OF EACH PLUG WIRE OF THE COIL WHICH DID NOT FIRE THE SPARK TESTER.
- WIRE RESISTANCE SHOULD BE LESS THAN 30,000 OHMS EACH AND WIRES SHOULD NOT BE GROUNDED. ARE WIRES OK?

YES → REPLACE THE SPARK PLUG FOR THE LEAD WHICH WAS JUMPERED TO GROUND. IF MISFIRE IS STILL PRESENT, START MISFIRE TEST AGAIN AT STEP 1.

YES → ④

NO → REPLACE FAULTY WIRE(S).

④
- REMOVE COIL RETAINING NUTS AND REMOVE COILS.
- COILS SHOULD BE FREE OF CARBON TRACKING. ARE THEY?

YES → ⑤

NO → REPLACE IGNITION COIL. ALSO CHECK FOR FAULTY PLUG WIRE CONNECTION(S) AND WIRE NIPPLE(S) FOR CARBON TRACKING.

⑤
- SWITCH A NORMALLY OPERATING COIL WITH THE COIL FROM PROBLEM CYLINDER.
- SPARK SHOULD JUMP TESTER GAP AT PROBLEM CYLINDER WHILE CRANKING ENGINE. DID IT?

YES → ORIGINAL IGNITION COIL IS FAULTY.

NO → REPLACE ELECTRONIC IGNITION MODULE.

★**CAUTION:** When handling secondary spark plug leads with engine running, insulated pliers must be used and care exercised to prevent a possible electrical shock.

CLEAR DIAGNOSTIC TROUBLE CODES AND CONFIRM "CLOSED LOOP" OPERATION AND NORMAL "CHECK ENGINE" MALFUNCTION INDICATOR LAMP OPERATION.

CHART C-4D-2

ELECTRONIC IGNITION (EI) MISFIRE UNDER LOAD

Circuit Description:

The electronic ignition system uses a waste spark method of distribution. For example, in this type of system the ignition control module triggers the #1/4 coil pair resulting in both #1 and #4 spark plugs firing at the same time #1 cylinder is on the compression stroke at the same time #4 is on the exhaust stroke, resulting in a lower energy requirement to fire #4 spark plug. This leaves the remainder of the high voltage to be used to fire #1 spark plug. On this application, the crankshaft position sensor is mounted to the engine block and protrudes through the block to within approximately 050" of the crankshaft reluctor. Since the reluctor is a machined portion of the crankshaft and the crankshaft position sensor is mounted in a fixed position on the block, timing adjustments are not possible or necessary.

Test Description: Numbers below refer to circled numbers on the diagnostic chart.

① If the "Misfire" complaint exists at idle only, the diagnostic chart on page 1 must be used. A spark tester such as a ST-125 must be used because it is essential to verify adequate available secondary voltage at the spark plug. (25,000 volts). Spark should jump the test gap on all 4 leads. This simulates a "load" condition.

② If the spark jumps the test gap after grounding the opposite plug wire, it indicates excessive resistance in the plug which was Bypassed. A faulty or poor connection at that plug could also result in the miss condition. Also, check for carbon deposits inside the spark plug boot.

③ If carbon tracking is evident, replace coil and be sure plug wires relating to that coil are clean and tight. Excessive wire resistance or faulty connections could have caused the coil to be damaged.

④ If the no spark condition follows the suspected coil, that coil is faulty, otherwise, the ignition control module is the cause of no spark. This test could also be performed by substituting a known good coil for the one causing the no spark condition.

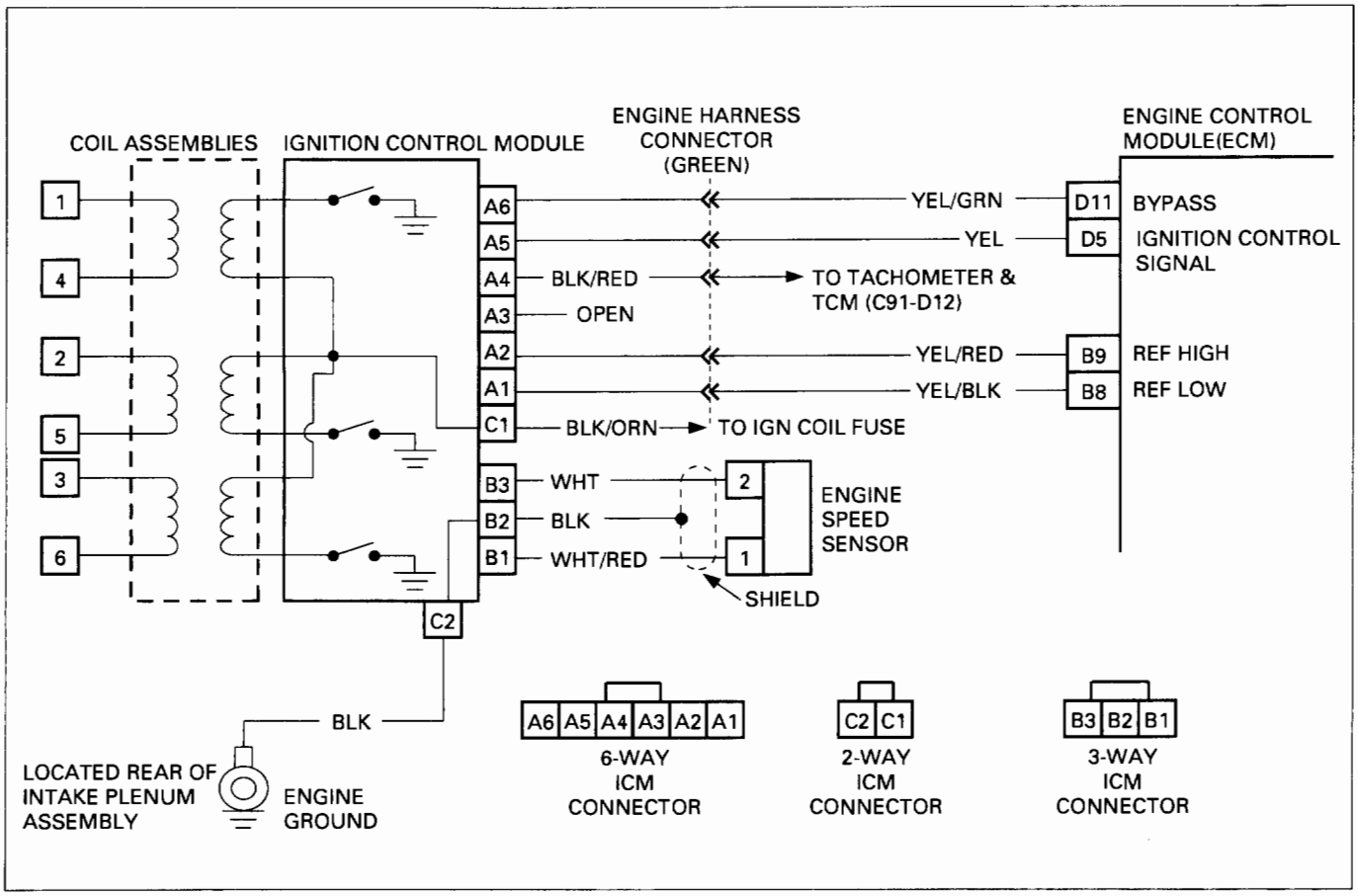

Fig. 6E2-90

CHART C-4D-2

ELECTRONIC IGNITION (EI) MISFIRE UNDER LOAD

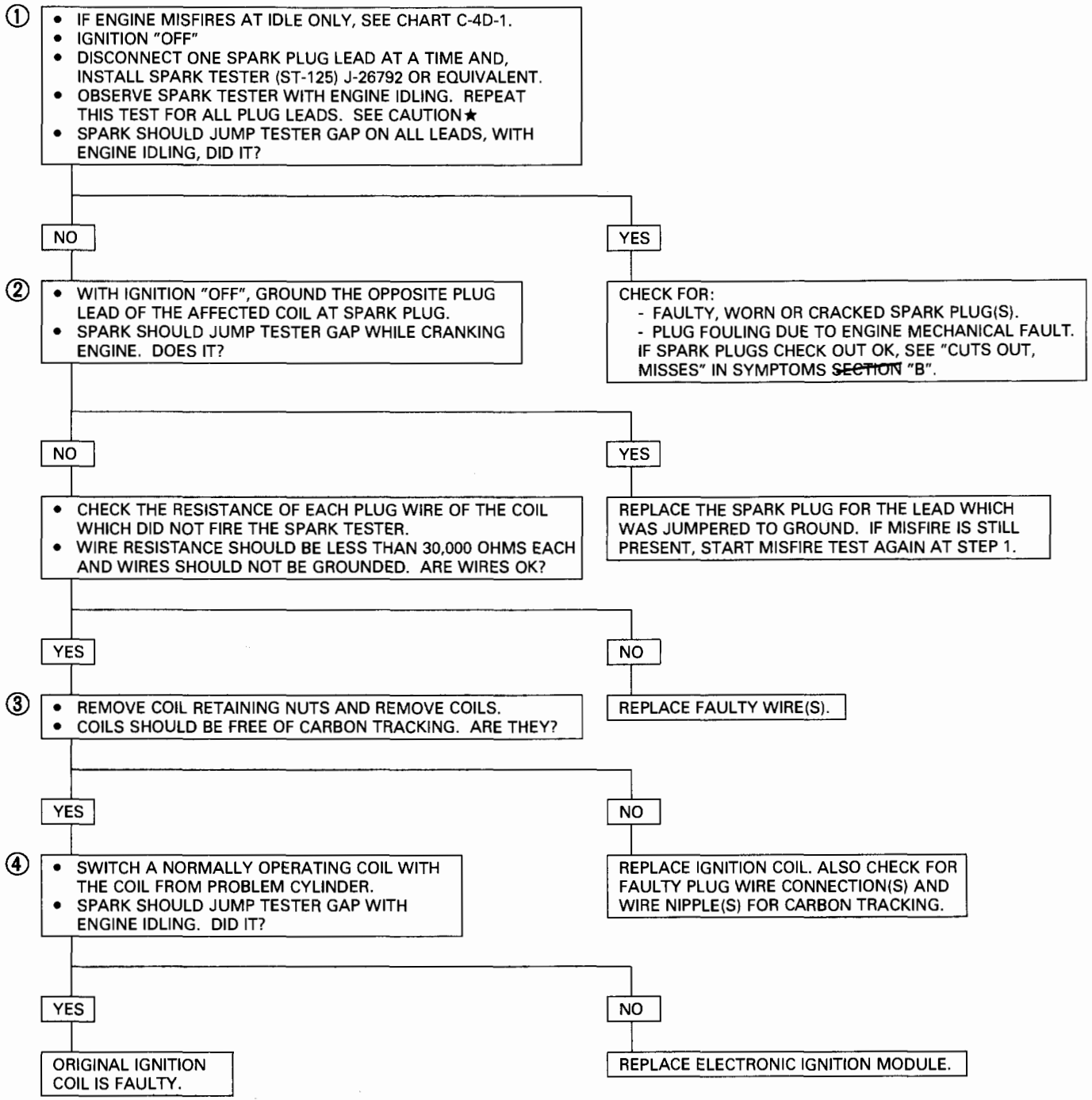

★CAUTION: When handling secondary spark plug leads with engine running, insulated pliers must be used and care exercised to prevent a possible electrical shock.

CLEAR DIAGNOSTIC TROUBLE CODES AND CONFIRM "CLOSED LOOP" OPERATION AND NORMAL "CHECK ENGINE" MALFUNCTION INDICATOR LAMP OPERATION.

SECTION C-5

KNOCK SENSOR (KS) SYSTEM (DOHC ONLY)

CONTENTS

General Description 6E2-146
Purpose 6E2-146
Operation 6E2-146
Diagnosis 6E2-146
Results Of Incorrect Knock Sensor (KS) System Operation 6E2-146
On-Vehicle Service 6E2-147
Knock Sensor (KS) System. 6E2-147
Knock Sensor (KS) Module 6E2-147
Chart C-5 Knock Sensor (KS) System Check . . . 6E2-148

GENERAL DESCRIPTION

PURPOSE

To control spark knock, a Knock Sensor (KS) system has been added. This system is designed to retard spark timing up to 20°, to reduce spark knock in the engine. This allows the engine to use maximum spark advance to improve driveability and fuel economy. Varying octane levels in gasoline can cause detonation in engines. Detonation is called spark knock.

OPERATION

The KS system has two major components:

- KS Module
- KS System

The sensor is mounted in the engine block under the Intake Manifold assembly. When the KS detects abnormal vibration (spark knocking) in the engine, it produced a voltage that is received by the KS module. As long as the KS module sees no voltage from the KS (knock not present), it sends a signal voltage (8 to 10 volts) to the Engine Control Module (ECM) and the ECM provides normal spark advance.

When the module detects voltage from the KS (knock present), it turns "OFF" the signal to the ECM and the voltage at terminal "D10" goes to 0 volts. The ECM then retards ignition control (IC) to reduce spark knock.

The KS signal line has a shield wire to prevent any false signals to the KS module. If the shield wire loses it ground a false diagnostic trouble code (DTC) 43 may result or the ignition timing maybe retard needlessly.

DIAGNOSIS

RESULTS OF INCORRECT KNOCK SENSOR (KS) SYSTEM OPERATION

Loss of the KS signal or loss of ground at KS module would cause the signal to the ECM to remain high. This condition would cause the ECM to control IC, as if no spark knocking were happening. No retard would occur, and spark knocking could become severe under heavy engine load conditions.

Loss of the KS signal to the ECM would cause the ECM to constantly retard IC. This could result in sluggish performance and cause a DTC 43 to set.

A "Scan tool" will read KC signal in A/D counts. When detonation is detected, KC signal counts will increment, as long as knock is present. "Scan tools" will indicate knock being present either by showing A/D counts, or displaying "Yes" (knock present), or "No" (knock not present). If DTC 43 is present, use that chart to diagnose system. If no DTC is present and KS system is suspected, use CHART C-5.

ON-VEHICLE SERVICE

KNOCK SENSOR (KS) SYSTEM

Refer to engine section of this service manual for intake removal and access to the knock sensor (KS).

KNOCK SENSOR (KS) MODULE

Refer to (Figure C5-1).
KS module is mounted to a bracket, located at the upper right hand corner of the inner fender.

REMOVE OR DISCONNECT

1. Negative battery cable
2. KS module connector
3. Attaching screws
4. Evaporate emission canister purge bracket
5. KS module

INSTALL OR CONNECT

1. KS module
2. Attaching screws
3. KS module connector
4. Evaporate emission canister purge bracket
5. Negative battery cable

CHART C-5

KNOCK SENSOR (KS) SYSTEM CHECK (ENGINE KNOCK, POOR PERFORMANCE, OR POOR ECONOMY)

Circuit Description:

Knock Sensor (KS) is accomplished with a module that sends a voltage signal to the Engine Control Module (ECM). As the knock sensor detects engine knock, the voltage from the KS module to the ECM is shut "OFF" and this signals the ECM to retard timing, if engine speed is over about 900.

Test Description: Numbers below refer to circled numbers on the diagnostic chart.

① If a diagnostic trouble code 43 is not set, but a KS signal is indicated while running at 1500 revolution per minute, listen for an internal engine noise. Under a no load condition, there should not be any detonation, and if knock is indicated, an internal engine problem may exist.

② Usually a KS signal can be generated by tapping on the right exhaust manifold. This test can also be performed at idle. Test number 1 was run at 1500 revolution per minute, to determine if a constant KS signal was present, which would affect engine performance.

③ This tests whether the KS signal is due to the sensor, a basic engine problem, or the KS module.

④ If the module ground circuit is faulty, the KS module will not function correctly. The test light should light indicating the ground circuit is OK.

⑤ Contacting terminal "E" of KS module harness with a test light 12 volts, should generate a KS signal to determine whether the knock sensor is faulty, or the KS module can't recognize a KS signal.

Diagnostic Aids:

If the KS system checks OK, but detonation is the complaint, refer to "Detonation/Spark Knock" symptom in "Symptoms, "Section "6E2-B".

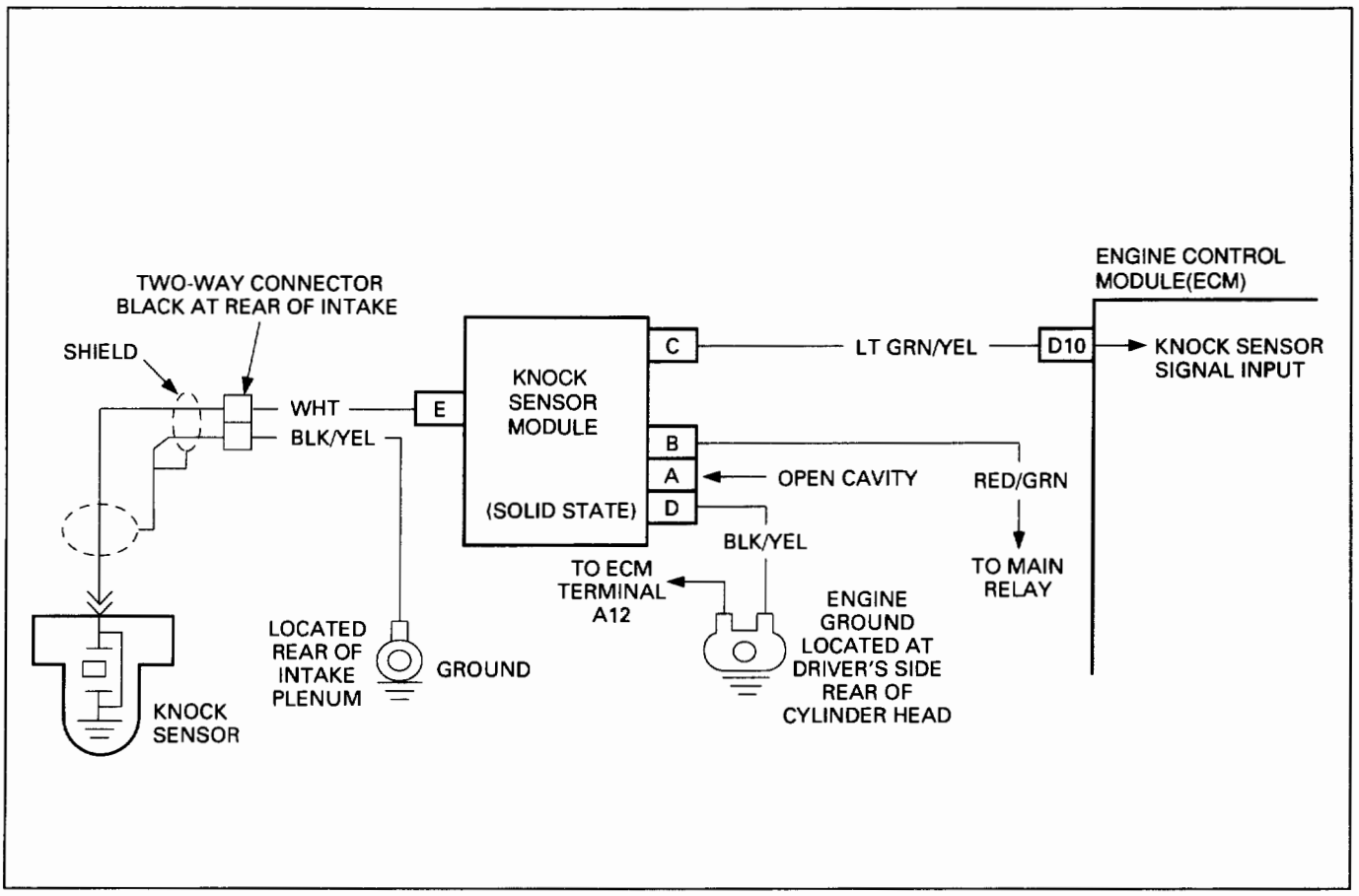

Fig. 6E2-91

CHART C-5

KNOCK SENSOR (KS) SYSTEM CHECK (ENGINE KNOCK, POOR PERFORMANCE, OR POOR ECONOMY)

THIS CHART SHOULD BE USED AFTER ALL OTHER CAUSES OF SPARK KNOCK HAVE BEEN CHECKED. I.E. TIMING, EXHAUST GAS RECIRCULATION, ENGINE TEMPERATURE OR EXCESSIVE ENGINE NOISE, ETC. IF DIAGNOSTIC TROUBLE CODE (DTC) 43 IS SET, USE THAT CHART FIRST.

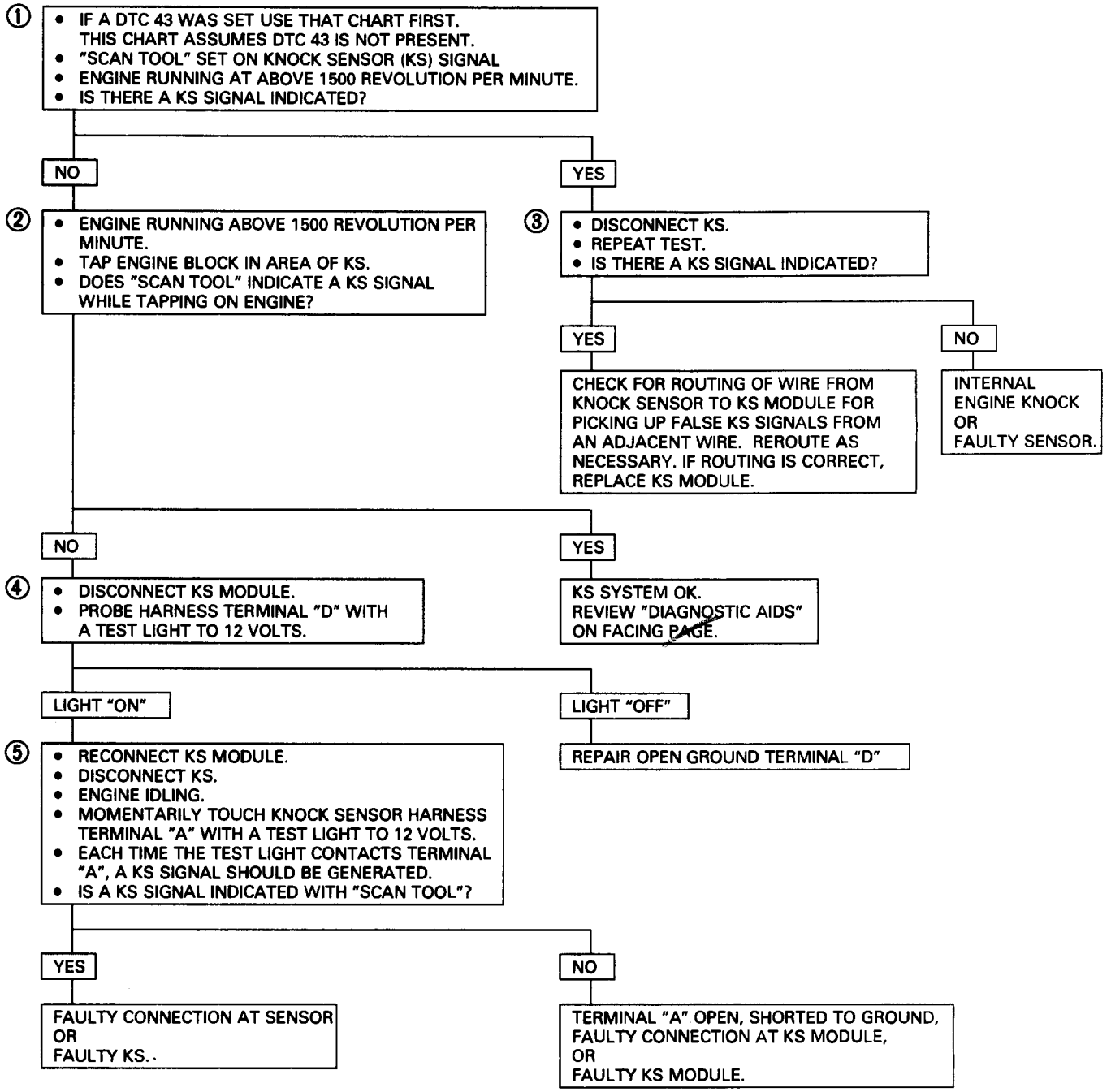

MEMO

SECTION C-7

EXHAUST GAS RECIRCULATION (EGR) SYSTEM

CONTENTS

GENERAL DESCRIPTION 6E2-151
Operation 6E2-151
Exhaust Gas Recirculation (EGR) Valve Check 6E2-152
Exhaust Gas Recirculation (EGR) Backpressure Transducer (BPT) Check . . . 6E2-152
Exhaust Gas Recirculation (EGR) Vacuum Switch Valve (VSV) Solenoid Check 6E2-152
DIAGNOSIS 6E2-153
ON-VEHICLE SERVICE 6E2-153
Exhaust Gas Recirculation (EGR) Manifold Passage 6E2-153
Exhaust Gas Recirculation (EGR) Valve Replacement 6E2-153
Exhaust Gas Recirculation (EGR) Backpressure Transducer (BPT) Replacement 6E2-153
Exhaust Gas Recirculation (EGR) Vacuum Switch Valve (VSV) Replacement . 6E2-153
CHART C-7A Exhaust Gas Recirculation (EGR) System Check 6E2-154

GENERAL DESCRIPTION

The Exhaust Gas Recirculation (EGR) System controls the formation of NOx (Oxides of Nitrogen) Emissions by recirculating the exhaust gases into the combustion chamber. This is done through the intake manifold.

OPERATION (Fig. 6E2-93)

The EGR is controlled by the engine control module (ECM) through an EGR Vacuum Switch Valve (VSV) and Back Pressure Transducer (BPT). Vacuum is allowed to the EGR Valve at acceleration and shut "OFF" upon deceleration.

The diaphragm mounted in the EGR BPT is operated by back pressure of the exhaust gas to open and close the valve. By this opening and closing action of the valve, the EGR BPT controls the vacuum transmitted to the EGR valve.

Under a low load condition such as low speed driving, the exhaust pressure is low. In this state, the BPT valve opens to allow the air into the vacuum passage from the outside.

As a result, the vacuum transmitted to the EGR valve becomes smaller and so does the opening of the EGR valve.

Thus, less amount of exhaust gas is recirculated to the intake manifold.

Under a high load condition such as high speed driving, on the other hand, the exhaust pressure is high. By the high exhaust pressure, the diaphragm in the BPT is pushed up and closes its valve. As the air does not enter the vacuum passage in this state, the vacuum transmitted to the EGR valve grows larger and so does the opening of the EGR valve.

Thus, larger amount of exhaust gas is recirculated to the intake manifold.

Under any one of the following conditions, ECM closes the vacuum passage of VSV. In this state, as the vacuum is not transmitted to the EGR valve, it remains closed.

- When engine coolant temperature is low.
- When throttle body is at idle position.
- When engine is running under high load.
- When intake manifold absolute pressure is low.

Other than the above, EGR valve opens and closes in accordance with EGR BPT operation.

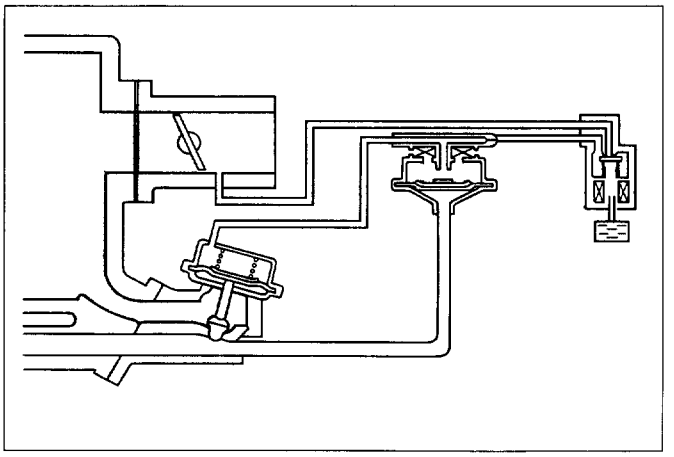

Fig. 6E2-93

Saved as 150 & 151

EXHAUST GAS RECIRCULATION (EGR) VALVE CHECK

1. Engine operating a normal temperature 60°C (120°F).
2. Place finger on Exhaust Gas Recirculation (EGR) valve diaphragm and accelerate engine, diaphragm should move.
3. Disconnect vacuum hose from EGR valve.
4. Apply 10" inches of vacuum using a vacuum pump to valve with finger on diaphragm. It should move and engine may stall.
5. If valve passes the above test use CHART C-7A. If valve fails, replace valve.

EXHAUST GAS RECIRCULATION (EGR) BACK PRESSURE TRANSDUCER (BPT) CHECK

1. Remove vacuum hoses (3) from modulator.
2. Place finger over back pressure transducer tube "Vacuum Switch Valve (VSV)" and blow in tube "Exhaust Gas Recirculation (EGR) valve" (Fig. 6E2-94). Air should pass through filter part of back pressure transducer.
3. Connect vacuum pump to tube "VSV" and plug tube "EGR valve".
4. Blow air into Tube "S". Should be able to obtain vacuum on pump.
5. If EGR modulator fails this test, replace back pressure transducer.

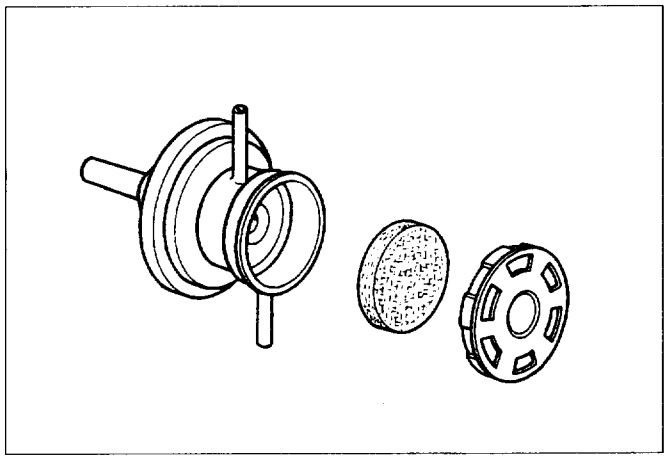

Fig. 6E2-94

EXHAUST GAS RECIRCULATION (EGR) VACUUM SWITCH VALVE (VSV) SOLENOID CHECK

1. Disconnect vacuum hoses (2) from solenoid.
2. Disconnect electrical connector with ignition "OFF".
3. Using DVOM check resistance between two terminals.
4. You should have 33-39 ohms of resistance. If resistance is within specification proceed to step 5. If not, replace solenoid.
5. Blow into tube "A", air should exhaust through filter, not tube "B" (Fig. 6E2-95).
6. Reconnect electrical connector.
7. Ignition "ON", ground Diagnosis Switch Terminal.
8. Blow air into tube "A", air should exhaust from tube "B" now (Fig. 6E2-95).
   If VSV solenoid fails the check, replace VSV.

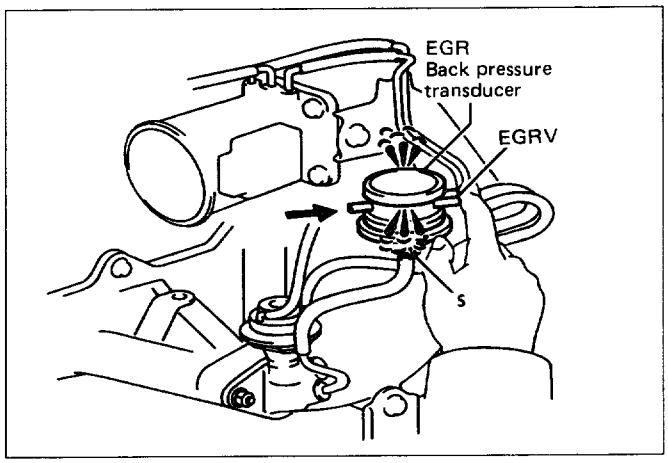

Fig. 6E2-95

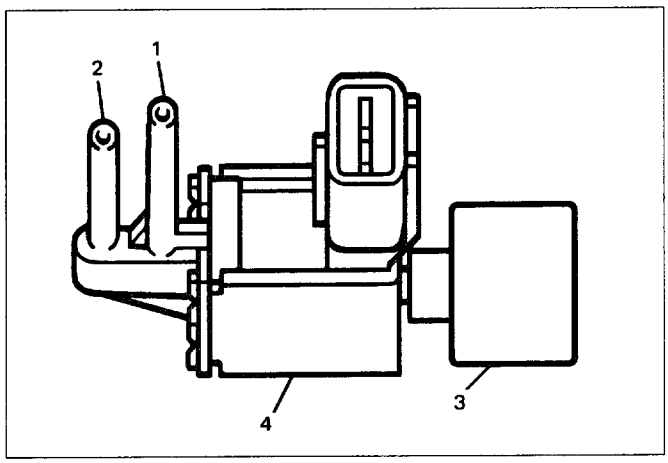

Fig. 6E2-96

DIAGNOSIS

Diagnosis of the Exhaust Gas Recirculation (EGR) system is covered in CHART C-7 at the end of this section.

ON-VEHICLE SERVICE

EXHAUST GAS RECIRCULATION (EGR) MANIFOLD PASSAGE

INSPECTION AND REPAIR

If Exhaust Gas Recirculation (EGR) passages in the inlet manifold indicate excessive build-up of deposits, the passages should be cleaned. Care should be taken to ensure that all loose particles are completely removed, to prevent them from clogging the EGR valve, or from being ingested into the engine.
Do not wash EGR valve in solvents or de greaser as permanent damage to valve diaphragm may result. Also, sand blasting of the valve is not recommended, since this can affect the operation of the valve.

EXHAUST GAS RECIRCULATION (EGR) VALVE REPLACEMENT

REMOVAL

1. Air cleaner duct assembly.
2. Vacuum hoses from EGR valve.
3. EGR pipe
4. Retaining bolts (2) from valve.
5. EGR valve & gasket.

INSTALLATION

5. EGR valve & New gasket.
4. Retaining bolts to valve.
3. EGR pipe.
2. Vacuum hoses to EGR valve.
1. Air cleaner dust assembly.

EXHAUST GAS RECIRCULATION (EGR) BACKPRESSURE TRANSDUCER (BPT) REPLACEMENT

REMOVAL

1. Vacuum hoses.
2. Back pressure transducer

INSTALLATION

1. Vacuum hoses
2. Back pressure transducer

EXHAUST GAS RECIRCULATION (EGR) VACUUM SWITCH VALVE (VSV) REPLACEMENT

REMOVAL

1. Electrical connector
2. Vacuum hoses from Vacuum Switch Valve (VSV)
3. Two fasteners hold VSV to intake manifold.

INSTALLATION

3. VSV and Retaining bolts.
2. Vacuum hoses
1. Electrical connector

CHART C-7A

EXHAUST GAS RECIRCULATION (EGR) SYSTEM CHECK

Circuit Description:

A properly operating Exhaust Gas Recirculation (EGR) system will directly affect the air/fuel requirements of the engine. Since the exhaust gas introduced into the air/fuel mixture is an inert gas (contains very little or no oxygen), less fuel is required to maintain a correct air/fuel ratio. If the EGR system were to become inoperative, the inert exhaust gas would be replaced with air and the air/fuel mixture would be leaner. The Engine Control Module (ECM) would compensate for the lean condition by adding fuel, resulting in higher block learn values.

The engine control system operates within two block learn cells, a closed throttle cell and an open throttle cell. Since EGR is not used at idle, the closed throttle cell would not be affected by EGR system operation. The open throttle cell is affected by EGR operation and when the EGR system is operating properly, the block learn values in both cells should be close to being the same. If the EGR system was inoperative, the block learn value in the open throttle cell would change (become higher) to compensate for the resulting lean system, but the block learn value in the closed throttle cell would not change.

This change or difference in block learn values is used to monitor EGR system performance.

Diagnostic Aids:

The EGR valve chart is a check of the EGR system. If the EGR system works properly, check other items that could result in high block learn values in the open throttle cell, but not in the closed throttle cell.

CHECK:

EGR Passages

Restricted or blocked

Manifold Absolute Pressure Sensor

A manifold absolute pressure sensor may shift in calibration enough to affect fuel delivery. Use CHART C-1D, manifold absolute pressure output check.

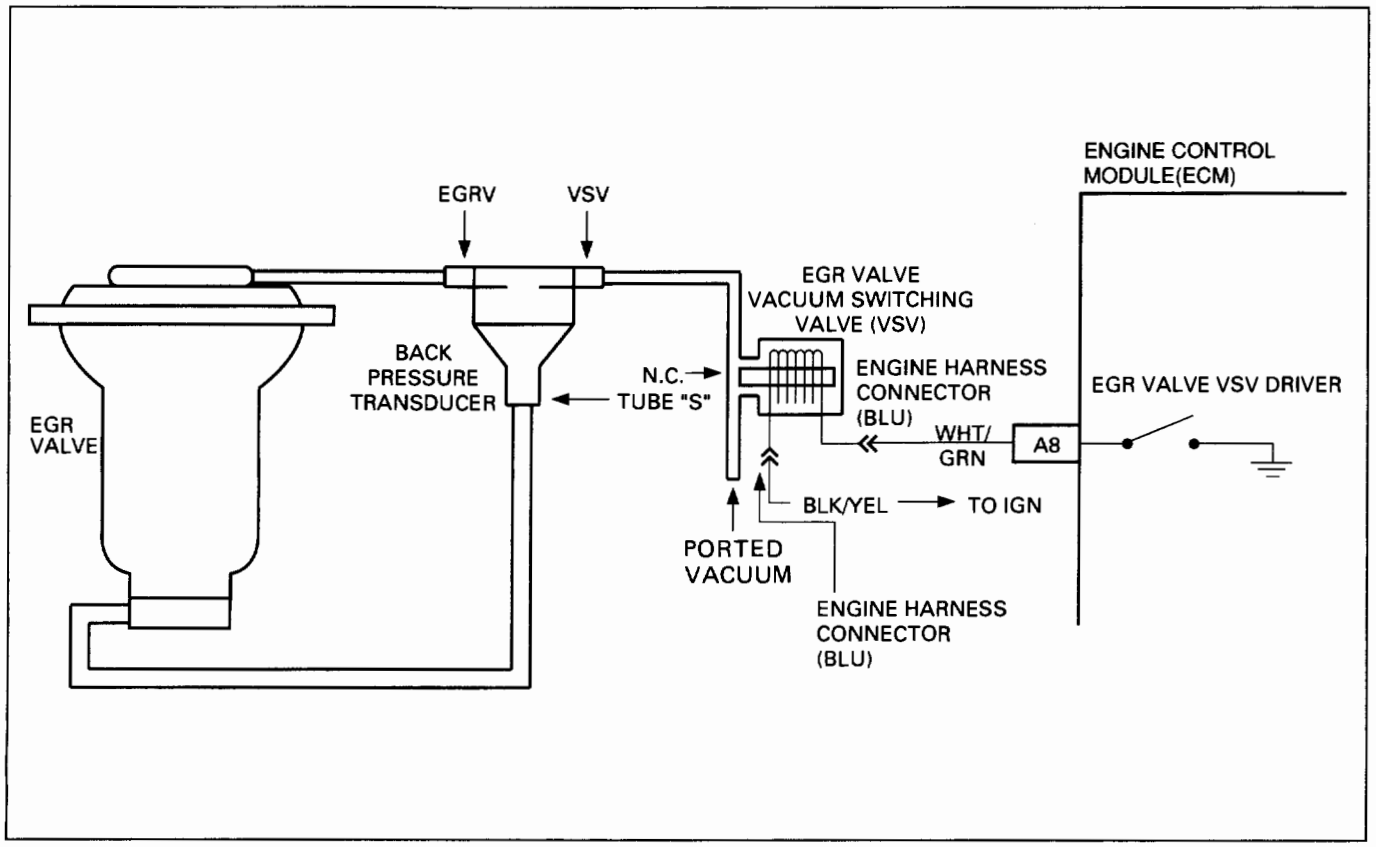

Fig. 6E2-98

CHART C-7A

EXHAUST GAS RECIRCULATION (EGR) SYSTEM CHECK

- FIRMLY GRASP TOP OF EXHAUST GAS RECIRCULATION (EGR) VALVE AND CHECK FOR LOOSENESS BY TRYING TO ROTATE VALVE IN BOTH DIRECTIONS.
  IS LOOSENESS FELT?

NO

- PLACE TRANSMISSION IN "PARK" OR "NEUTRAL."
- RUN WARM ENGINE AT IDLE.
- ENGINE TEMPERATURE MUST BE ABOVE 80°C (176°F).
- DISCONNECT VACUUM HOSE TO EGR VALVE.
- APPLY 10 INCHES OF VACUUM TO EGR VALVE.
- ENGINE SHOULD RUN ROUGH AND/OR STALL.
  DOES IT?

YES

REPLACE EGR VALVE ASSEMBLY

YES

- CHECK FOR DAMAGE VACUUM HOSE FROM THROTTLE BODY TO EGR VALVE.
- CONNECT VACUUM GAGE TO EGR BACKPRESSURE TRANSDUCER SIDE OF EGR VALVE.
- INCREASE ENGINE SPEED ABOVE 2000 REVOLUTION PER MINUTE.
  SHOULD HAVE 10 INCHES OF VACUUM.
  DOES IT?

NO

- REMOVE EGR VALVE AND CLEAN ASSEMBLY.
- REPLACE VALVE IF NECESSARY.

NO

- ENGINE IDLING CHECK VACUUM SOURCE BEFORE EGR MODULATOR.

YES

EGR SYSTEM WORKING PROPERLY. NO TROUBLE FOUND.

OK

REFER TO DIAGNOSTIC AIDS ON FACING PAGE.

NOT OK

REPLACE BACKPRESSURE TRANSDUCER.

CLEAR DIAGNOSTIC TROUBLE CODES AND CONFIRM "CLOSED LOOP" OPERATION AND NORMAL "CHECK ENGINE" MALFUNCTION INDICATOR LAMP OPERATION.

MEMO

SECTION C-8

SHIFT INDICATOR LIGHT (M/T ONLY)

CONTENTS

General Description 6E2-157
Purpose 6E2-157
Operation 6E2-157
Diagnosis 6E2-157
Transmission Switch Functional Check 6E2-157
Clutch Switch Functional Check 6E2-157
Chart C-8 Manual Transmission (M/T) Shift Light 6E2-158

GENERAL DESCRIPTION

PURPOSE

The shift indicator light is a device which is installed in the instrument panel to urge the driver to up shift at the proper moment. This insures operations for best fuel economy.

OPERATION

It turns on as soon as vehicle conditions become suitable for operation in the next higher gear, and turns off as the clutch is released for up shift.
The engine parameters used to activate the shift indicator light are engine speed, engine load and engine coolant temperature. The engine load is sensed as a function of Throttle Body (TB) position by a sensor built into the TB.

The shift indicator light turns on when the following conditions exist simultaneously:

1. Engine coolant temperature is hotter than —5°C.
2. TB is not in idle position.
3. The engine load, is not greater than the predetermined values.
4. The transmission gear is in any forward position other then 5th, that is, either of the two transmission switches (1st-2nd switch and 3rd-4th switch) is on. 1st-2nd switch turns on when the transmission is in 1st-2nd, and 3rd-4th switch turns on when the transmission 3rd or 4th.
5. The clutch is engaged (clutch switch is "ON").

The control system schematic is shown in CHART C-8.

DIAGNOSIS

See CHART C-8.

TRANSMISSION SWITCH FUNCTIONAL CHECK

1. Connector from the suspected faulty switch.
2. An ohmmeter across terminals of switch.
3. Operate gear shift.
4. Ohmmeter should indicate open (infinity) then closed (0Ω).
5. Replace switch if not operating as described.

CLUTCH SWITCH FUNCTIONAL CHECK

1. Remove clutch switch.
2. Ohmmeter to terminal of clutch switch.
3. Operate the clutch switch.
4. Ohmmeter should read "closed" (0Ω) then "open" (infinity) when clutch switch is pressed.
5. Replace switch if not operating as described.

CHART C-8

MANUAL TRANSMISSION (M/T) SHIFT LIGHT CHECK

Circuit Description:

The shift light indicates the best transmission shift point for maximum fuel economy. The light is controlled by the Engine Control Module (ECM) and is turned "ON" by grounding the ORN/BLU wire. The ECM uses information from the following inputs to control the shift light.

The ECM uses information from the following inputs to control the shift light:

- Engine coolant temperature sensor
- Throttle position sensor
- Vehicle speed sensor
- Revolution per minute

The ECM uses the measured revolution per minute and the vehicle speed to calculate what gear the vehicle is in. It's this calculation that determines when the shift light should be turned "ON".

Test Description: Number(s) below refer to circled number(s) on the diagnostic chart.

① This should not turn "ON" the shift light. If the light is "ON", there is a short to ground in ORN/BLU wire or a fault in the ECM.

② This checks the shift light circuit up to the ECM connector. If the shift light illuminates, then the ECM connector is faulty or the ECM does not have the ability to ground the circuit.

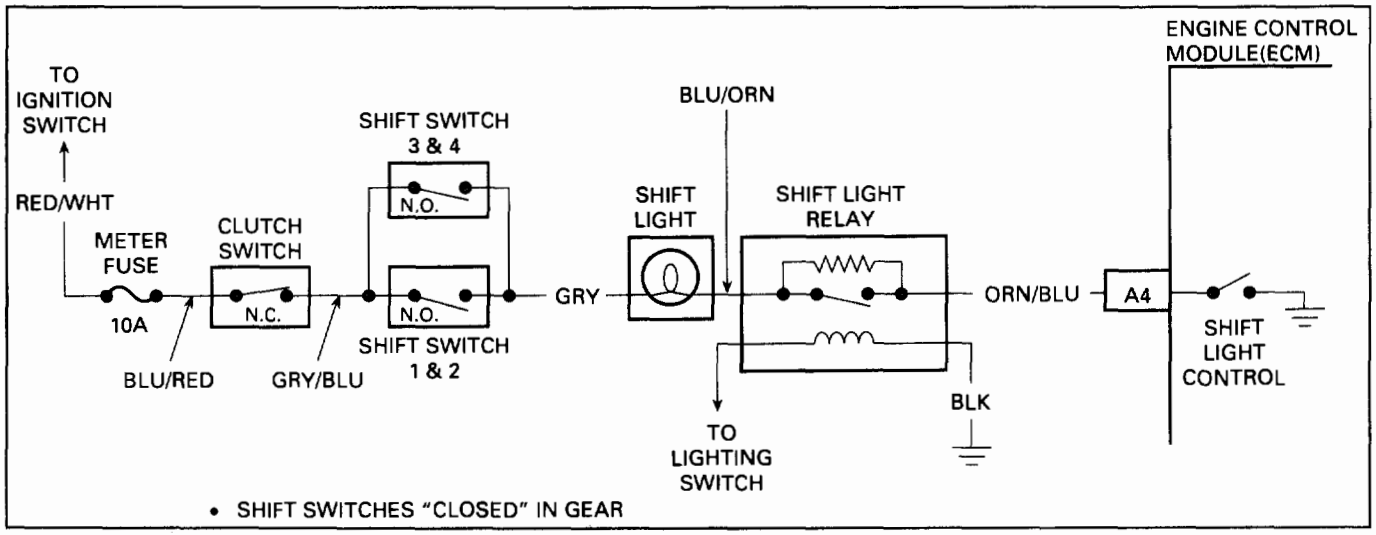

Fig. 6E2-99

CHART C-8

MANUAL TRANSMISSION (M/T) SHIFT LIGHT CHECK

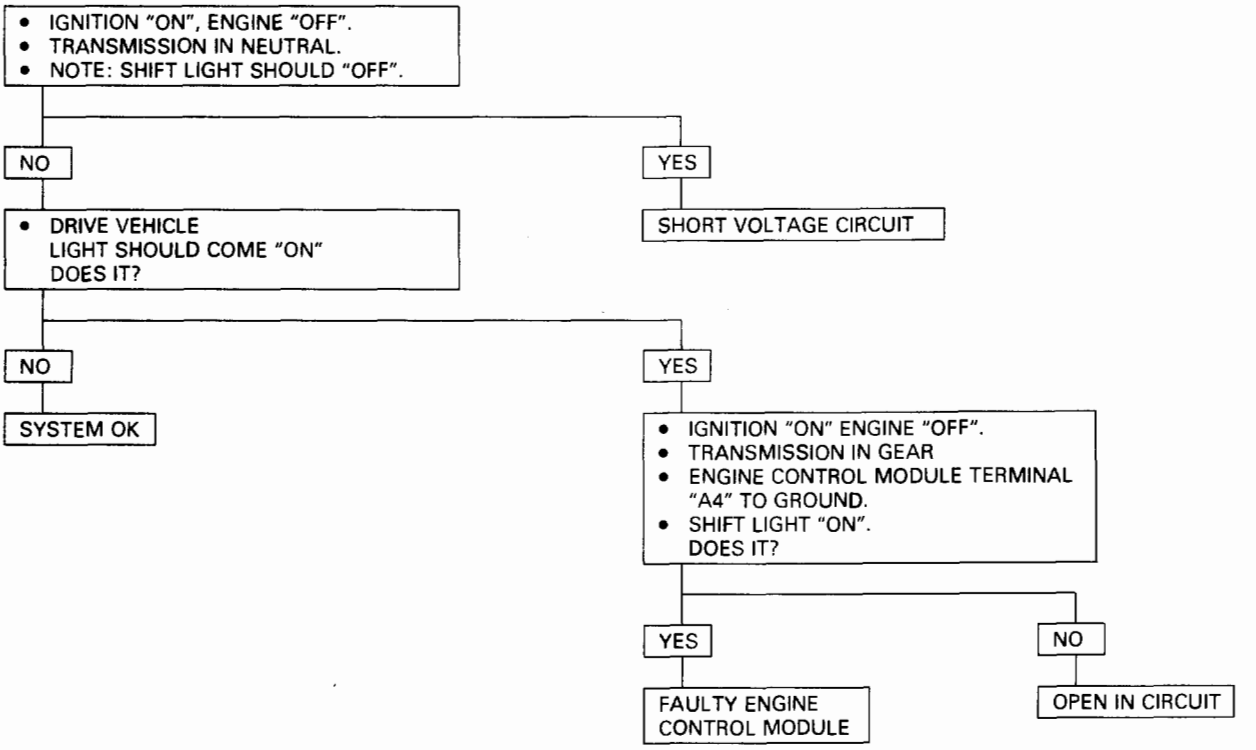

MEMO

SECTION C-10

AIR CONDITIONING (A/C) COMPRESSOR CLUTCH CONTROL SYSTEM

CONTENTS

General Description 6E2-161
Operation 6E2-161
Diagnosis 6E2-161
On-Vehicle Service 6E2-161
Chart C-10 Air Conditioning (A/C) System Functional Check 6E2-162

GENERAL DESCRIPTION

OPERATION

This system consists of a high pressure cut-out switch, Air Conditioning (A/C) compressor relay, A/C thermo switch relay, A/C controller and the compressor.

The high pressure cut-out switch (normally closed), opens when the head pressure gets too high. This will disable the A/C clutch, before damage can occur to the compressor or other A/C components.

When A/C control switch is "ON" and the high pressure switch and thermo switch are closed, a request signal is sent to the Engine Control Module (ECM). The ECM will then energize the A/C clutch through the A/C clutch relay. The A/C controller which is separate from the ECM will then turn the A/C cooling fan "ON".

The A/C controller controls the A/C cooling fan, as well as sending a signal to the ECM on model equipped with automatic transmission.

The ECM will disable the A/C clutch during Wide Open Throttle, or high power steering loads. The ECM has a slight delay for clutch engagement to allow for the idle to slightly increase. Refer to CHART C-10 for wiring and circuit description.

DIAGNOSIS

Chart C-10 should be used for the electrical portion of the A/C circuit. Section 1 B should be used for diagnosing the refrigerant portion of the system. The "Scan tool" will be used in diagnosing the system, as it has the ability to read the A/C request input to the ECM, as well as displaying when the ECM has commanded the A/C clutch "ON".

ON-VEHICLE SERVICE

For removal and replacement of A/C components, refer to A/C (SECTION 1B) in this Manual.

CHART C-10

AIR CONDITIONING (A/C) SYSTEM FUNCTIONAL CHECK

Circuit Description:

When the Air Conditioning (A/C) diagnostic test mode is selected, the Engine Control Module (ECM) will supply a ground to the A/C clutch relay. Battery positive voltage is then supplied to the A/C clutch through the completing of circuit through the thermo switch relay, which is part of the A/C "ON/OFF" switch circuit. If the A/C system exhibits high pressure or an overheating condition exist, the A/C system will be disabled by the open of the A/C high pressure switch or the A/C thermo switch.

Diagnostic Aids:

The A/C high pressure switch is located in the high pressure side A/C hose.

The thermo cut-out switch is part of the A/C evaporator mounted under the dash. For further information about the A/C system, refer to A/C (SECTION 1B).

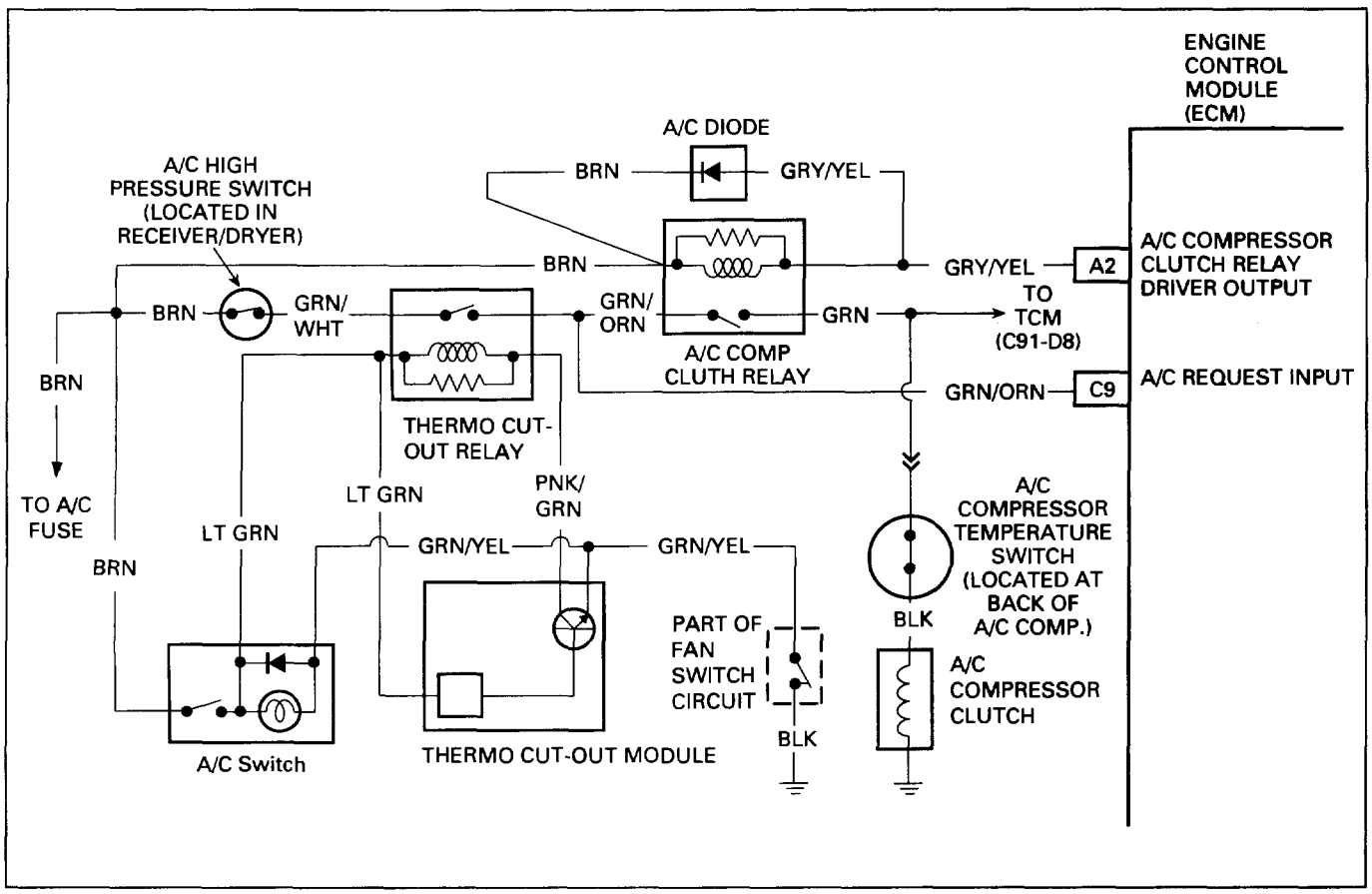

Fig. 6E2-100

CHART C-10

AIR CONDITIONING (A/C) SYSTEM FUNCTIONAL CHECK

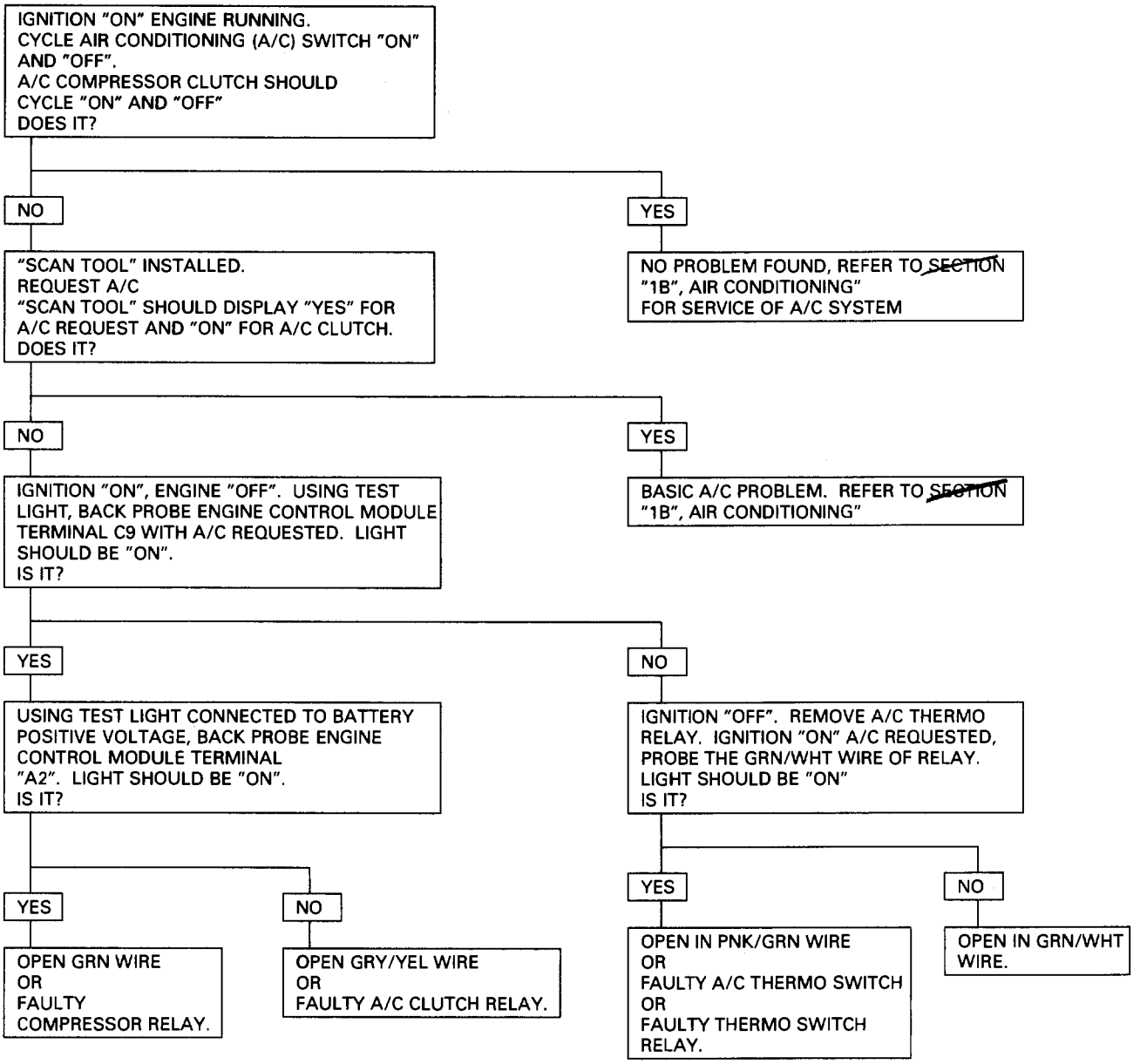

CLEAR DIAGNOSTIC TROUBLE CODES AND CONFIRM "CLOSED LOOP" OPERATION AND NO "CHECK ENGINE" MALFUNCTION INDICATOR LAMP.

SECTION C-13

POSITIVE CRANKCASE VENTILATION (PCV)

CONTENTS

GENERAL DESCRIPTION 6E2-164
PCV Valve 6E2-164
DIAGNOSIS 6E2-165
Functional Check of PCV 6E2-165
Results of Incorrect Operation 6E2-165
ON-VEHICLE SERVICE 6E2-165

GENERAL DESCRIPTION

PCV VALVE

A Positive Crankcase Ventilation (PCV) system is used to consume crankcase vapors in the combustion process instead of venting to atmosphere. Fresh air from the throttle body is supplied to the crankcase, mixed with blow-by gases and then passed through a Positive Crankcase Ventilation (PCV) into the intake manifold.

The primary control is through the PCV (Fig. 6E2-101) which meters the flow at a rate depending on manifold vacuum.

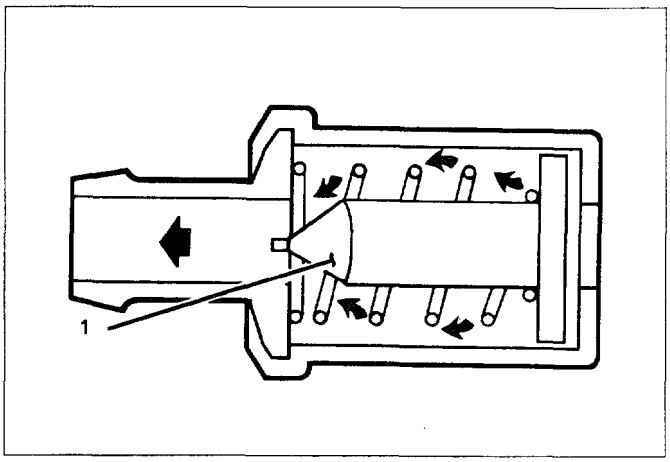

Fig. 6E2-101

To maintain idle quality, the PCV restricts the flow when intake manifold vacuum is high. If abnormal operating conditions arise, the system is designed to allow excessive amounts of blow-by gases to back flow through the crankcase vent tube into the air cleaner to be consumed by normal combustion.

A leaking valve or hose would cause:

- Rough idle.
- Stalling.
- High idle speed.

DIAGNOSIS

FUNCTIONAL CHECK OF POSITIVE CRANKCASE VENTILATION (PCV)

If an engine is idling rough, check for a clogged PCV or plugged hose. Replace as required. Use the following procedure.

1. Remove PCV from rocker arm cover.
2. Run the engine at idle.
3. If there is no vacuum at valve, check for plugged hoses or manifold port, or PCV.
   Replace plugged or deteriorated hoses.
4. Stop the engine and remove PCV. Remove PCV hose. Inspect metered orifice for being restricted or plugged. If restricted clean orifice.

With this system, any blow-by in excess of the system capacity (from a badly-worn engine, sustained heavy load, etc.) is exhausted into the intake manifold and is drawn into the engine.

Proper operation of the PCV System is dependent upon a sealed engine. If oil sledging or dilution is noted, and the PCV System is functioning properly, malfunction indicator lamp for possible cause and correct to ensure that system will function as intended.

RESULTS OF INCORRECT OPERATION

A plugged valve or hose may cause:

- Rough idle.
- Stalling or slow idle speed.
- Oil leaks.
- Oil in air cleaner.
- Sludge in engine.

ON-VEHICLE SERVICE

An engine which is operated without any crankcase ventilation can be damaged. Periodically, inspect the PCV, hoses and clamps and replace any showing signs of deterioration.

SPECIAL TOOLS

ILLUSTRATION	TOOL NO. TOOL NAME
	J-23738-A Vacuum pump with gage
	J-35616-A Connector test adapter kit
	J-35689-A Metri-pack terminal remover
	J-33095 Engine control module connector terminal remover
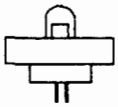	**J-34730-2A** Injector test light
	J-34730-B Multiport fuel injection diagnostic kit
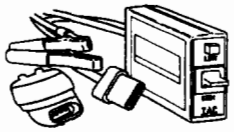	**J-37027A** Idle air control system driver

ILLUSTRATION	TOOL NO. TOOL NAME
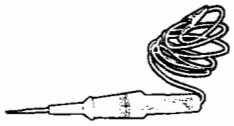	**J-34142-B** Unpowered test light
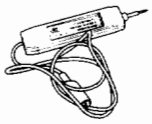	**J-34636** Circuit tester
	J-28742-A Weather pack terminal remover
	J-26792 Spark tester
	J-34730-3 Injector tester
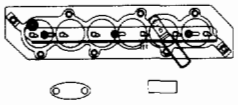	**J-39185** Intake manifold plate
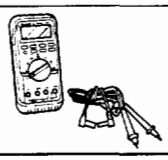	**J-39200** High impedance multimeter

SECTION 6F

ENGINE EXHAUST (V6 3.2L)

CAUTION:
Exhaust system components must have enough clearance from the underbody to prevent overheating the floor pan and damaging the passenger compartment, insulation and trim materials.

CONTENTS

General Description 6F–1
Hangers 6F–2
Three Way Catalytic Converter 6F–2
Gasket 6F–2
On-Vehicle Service 6F–3
Front Exhaust Pipe 6F–3
Center Exhaust Pipe 6F–4
Three Way Catalytic Converter 6F–5
Pre Catalytic Converter 6F–6
Exhaust Silencer 6F–7
Rear Exhaust Pipe 6F–8
Exhaust Pipe Mounting Rubber 6F–9
Main Data and Specifications 6F–10
Torque Specifications 6F–10

GENERAL DESCRIPTION

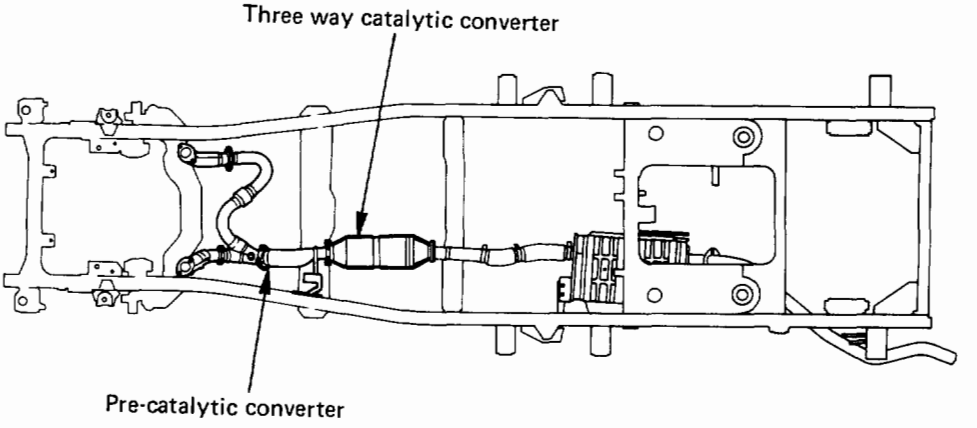

Fig. 6F-1

When inspecting or replacing exhaust system components, make sure there is adequate clearance from all points on the underbody to prevent overheating the floor pan and possible damage to the passenger compartment insulation and trim materials. Check complete exhaust system and nearby body areas and rear compartment lid for broken, damaged, missing or mispositioned parts, open seams, holes, loose connections or other deterioration which could permit exhaust fumes to seep into the rear compartment or passenger compartment. Dust or water in the rear compartment may be an indication of a problem in one of these areas. Any faulty areas should be corrected immediately.

HANGERS

Various types of hangers are used to support exhaust system(s). These include conventional rubber straps, rubber rings, and rubber blocks.
The installation of exhaust system supports is very important, as improperly installed supports can cause annoying vibrations which can be difficult to diagnose.

THREE WAY CATALYTIC CONVERTER

The three way catalytic converter is an emission control device added to the exhaust system to reduce pollutants from the exhaust gas stream.

CAUTION:
- The catalytic converter requires the use of unleaded fuel only.

Periodic maintenance of the exhaust system is not required. If the vehicle is raised for other service, it is advisable to check the condition of the complete exhaust system.
A dual bed monolith catalytic converter is used in combination with three way catalytic converter.
Catalytic Types:
Three way (Reduction/Oxidation) catalyst

The catalyst coating on the three way (reduction) converter contains platinum and rhodium which lowers the levels of oxide of nitrogen (NOx) as well as hydrocarbons (HC) and carbon monoxide (Co).

GASKET

The gasket must be replaced whenever a new exhaust pipe, muffler or catalytic converter is installed.

ON-VEHICLE SERVICE

FRONT EXHAUST PIPE

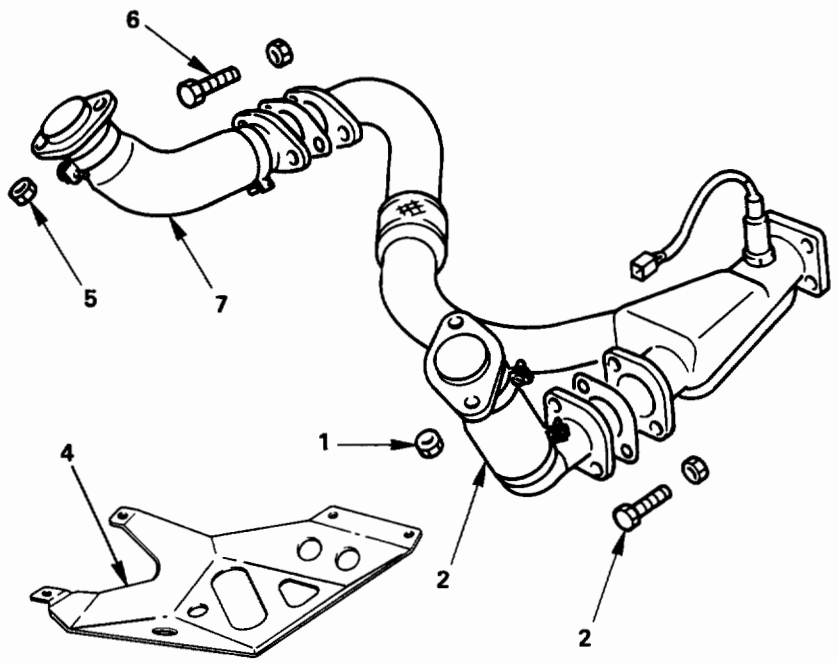

Removal steps

Left hand side

1. Front exhaust pipe fixing nuts
2. Front exhaust pipe fixing bolts and nuts
3. Front exhaust pipe

Right hand side

4. Exhaust protector
5. Front exhaust pipe fixing nuts
6. Front exhaust pipe fixing bolts and nuts
7. Front exhaust pipe

Installation steps

To install, follow the removal steps in the reverse order.

Fig. 6F-2

REMOVAL

Preparation:
- Battery negative cable.
- Raise the vehicle and support with suitable safety stands.

Left hand side

1. **Front exhaust pipe fixing nuts**
   - Disconnect front exhaust pipe at exhaust manifold.
2. **Front exhaust pipe fixing bolts and nuts**
   - Disconnect front exhaust pipe at center exhaust pipe.
3. **Front exhaust pipe**

Right hand side

4. **Exhaust protector**
5. **Front exhaust pipe fixing nuts**
   - Disconnect front exhaust pipe at exhaust manifold.
6. **Front exhaust pipe fixing bolts and nuts**
   - Disconnect front exhaust pipe at center exhaust pipe.
7. **Front exhaust pipe**

INSTALLATION

To install follow the removal steps in the reverse order, noting the following points.

NOTE

- Tighten the fixings to the specified torque.

Torque point	Torque N·m (lb·ft)
Front exhaust pipe fixing bolts	43 (32)
Front exhaust pipe fixing nuts	67 (49)
Exhaust protector fixing bolts	37 (27)

CENTER EXHAUST PIPE

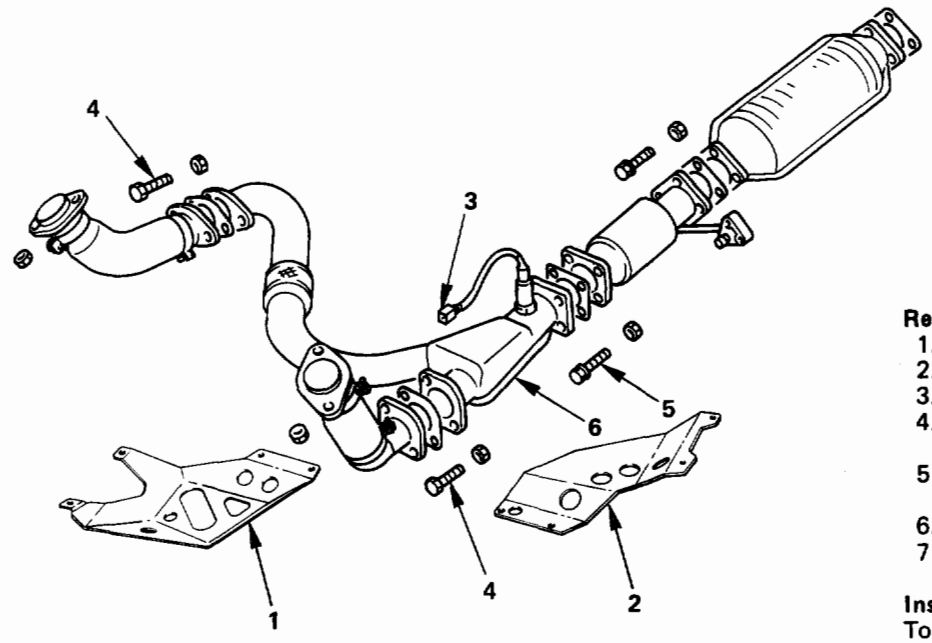

Removal steps
1. Exhaust protector
2. Exhaust protector
3. O_2 sensor harness connector
4. Center exhaust pipe fixing bolts and nuts
5. Center exhaust pipe fixing bolts and nuts
6. Mounting rubber
7. Center exhaust pipe

Installation steps
To install, follow the removal steps in the reverse order.

Fig. 6F-3

REMOVAL

Preparation:
- Battery negative cable.
- Raise the vehicle and support with suitable safety stands.

1. **Exhaust protector**
2. **Exhaust protector**
3. **O_2 sensor harness connector**
   - Disconnect O_2 sensor harness connector.
4. **Center exhaust pipe fixings manifold side**
   - Remove fixings from left and right flanges.
5. **Center exhaust pipe fixing bolts and nuts**
   - Disconnect center exhaust pipe at pre catalytic converter.
6. **Center exhaust pipe**

INSTALLATION

To install follow the removal steps in the reverse order, noting the following points.

NOTE:
1. Be sure to install the new gaskets between catalytic converter and exhaust pipes with the stamped "U" "AF" mark facing upwards (Fig. 6F-4).
2. Be sure to install the pre catalytic converter as shown (Fig. 6F-4).

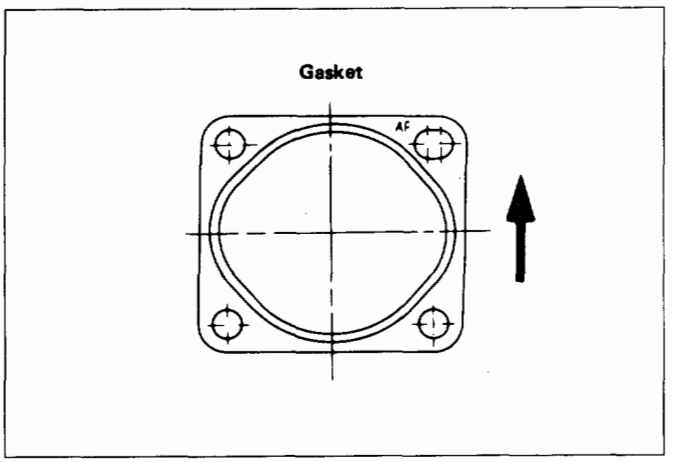

Fig. 6F-4

3. Tighten the fixing bolts to the specified torque.

Torque point	Torque N·m (lb·ft)
Center exhaust pipe fixings: manifold side	43 (32)
Center exhaust pipe fixings: converter side	43 (32)
Exhaust protector fixing bolts	37 (27)

THREE WAY CATALYTIC CONVERTER

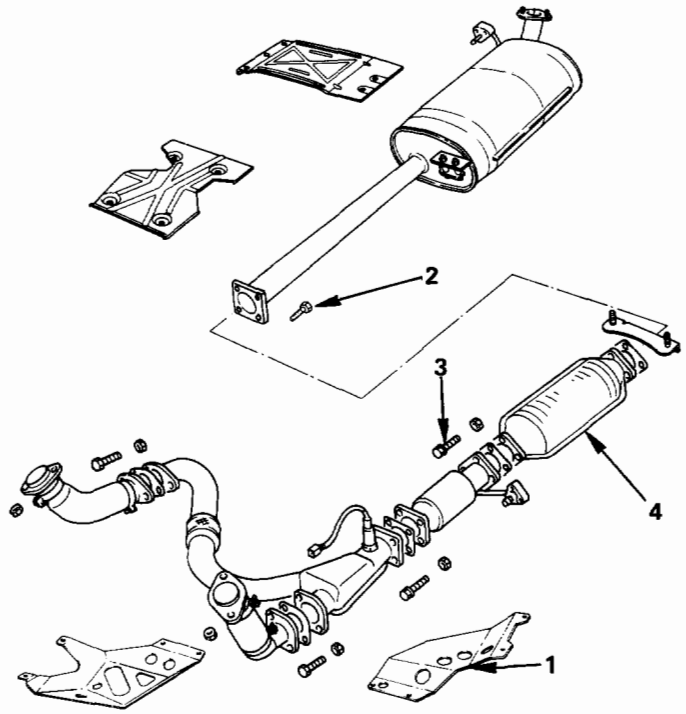

Removal steps
1. Exhaust protector
2. Three way catalytic converter fixing bolts
3. Three way catalytic converter fixing bolts and nuts
4. Three way catalytic converter

Installation steps
To install, follow the removal steps in the reverse order.

Fig. 6F-5

REMOVAL

Preparation:
- Battery negative cable.
- Raise the vehicle and support with suitable safety stands.

1. **Exhaust protector**
2. **Three way catalytic converter fixing bolts**
   - Disconnect three way catalytic converter at exhaust silencer.
3. **Three way catalytic converter fixing bolts and nuts**
   - Disconnect three way catalytic converter at pre catalytic converter.
4. **Three way catalytic converter**

INSTALLATION

To install follow the removal steps in the reverse order, noting the following points.

NOTE:
1. Be sure to install the new gaskets between three way catalytic converter and exhaust pipes with the stamped "U" "AF" mark facing upwards (Fig. 6F-6).
2. Be sure to install the three way catalytic converter as shown (Fig. 6F-6).

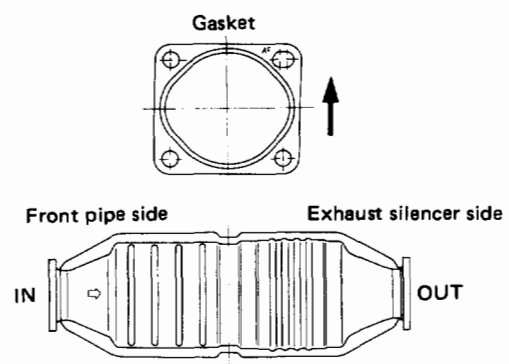

Fig. 6F-6

3. Tighten the fixing bolts to the specified torque.

Torque point	Torque N·m (lb·ft)
Three way catalytic converter fixing bolts: muffler side	43 (32)
Three way catalytic converter fixing bolts: pre catalytic converter side	43 (32)
Exhaust protector fixing bolts	37 (27)

PRE CATALYTIC CONVERTER

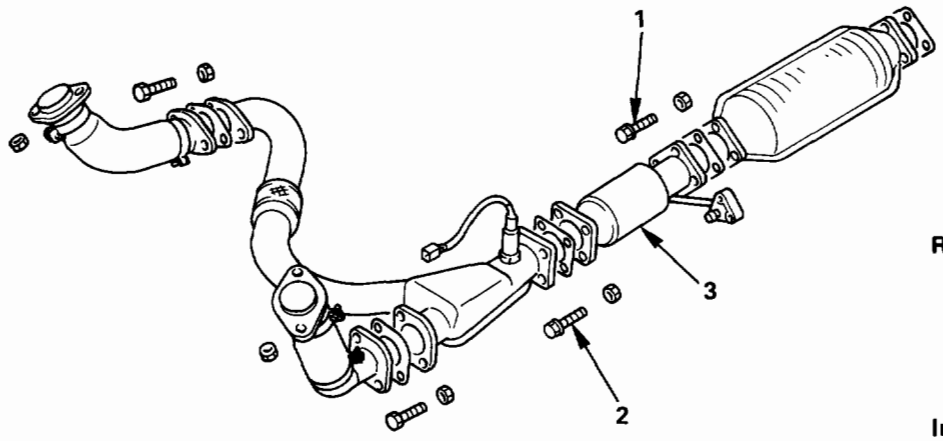

Removal steps
1. Pre catalytic converter fixing bolts and nuts
2. Pre catalytic converter fixing bolts and nuts
3. Pre catalytic converter

Installation steps
To install, follow the removal steps in the reverse order.

Fig. 6F-7

REMOVAL

Preparation:
- Battery negative cable.
- Raise the vehicle and support with suitable safety stands.

1. **Pre catalytic converter fixing bolts and nuts**
   - Disconnect pre catalytic converter at three way catalytic converter.
3. **Pre catalytic converter fixing bolts and nuts**
   - Disconnect pre catalytic converter at center exhaust pipe.
3. **Pre catalytic converter**

INSTALLATION

To install follow the removal steps in the reverse order, noting the following points.

NOTE:

1. Be sure to install the new gaskets between three way catalytic converter and exhaust pipes with the stamped "U" "AF" mark facing upwards (Fig. 6F-8).

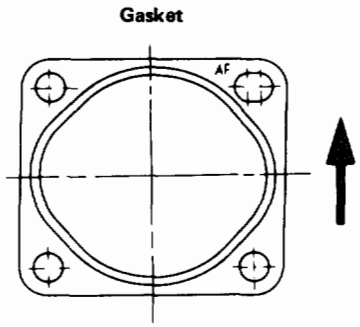

Fig. 6F-8

2. Tighten the fixing bolts to the specified torque.

Torque point	Torque N·m (lb·ft)
Pre catalytic converter fixing bolts: Three way catalytic converter side	43 (32)
Pre catalytic converter fixing bolts: center exhaust pipe side	43 (32)

EXHAUST SILENCER

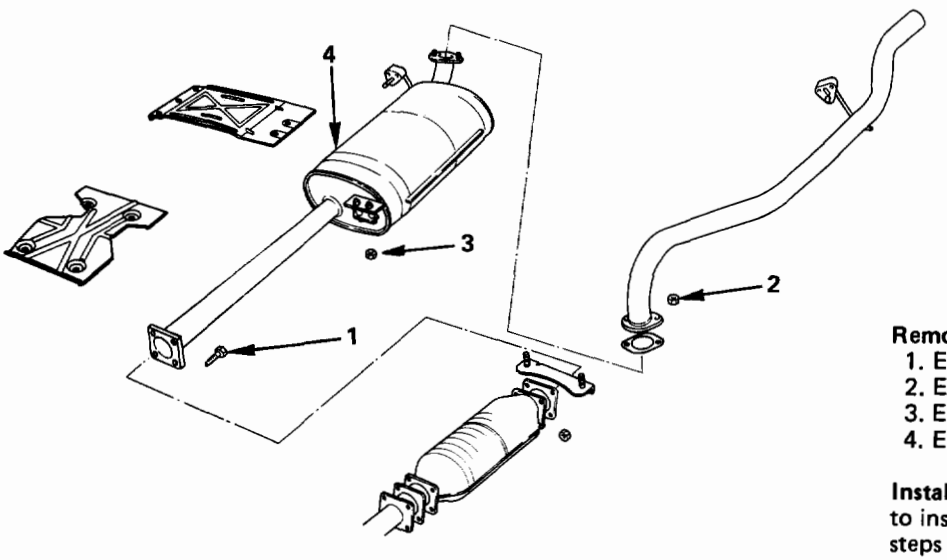

Removal steps
1. Exhaust silencer fixing bolts
2. Exhaust silencer fixing nuts
3. Exhaust silencer fixing nuts
4. Exhaust silencer

Installation steps
to install, follow the removal steps in the reverse order.

Fig. 6F-9

REMOVAL

Preparation:
- Battery negative cable.
- Raise the vehicle and support with suitable safety stands.

1. **Exhaust silencer fixing bolts**
   - Disconnect exhaust silencer at three way catalytic converter
2. **Exhaust silencer fixing nuts**
   - Disconnect exhaust silencer at rear exhaust pipe
3. **Exhaust silencer fixing nuts**
   - Remove fixing nuts at chassis side.
4. **Exhaust silencer**

INSTALLATION

To install follow the removal steps in the reverse order, noting the following points.

NOTE:
1. Be sure to install the new gaskets between three way catalytic converter and exhaust pipes with the stamped "U" "AF" mark facing upwards (Fig. 6F-10).
2. Be sure to install the three way catalytic converter as shown (Fig. 6F-10).

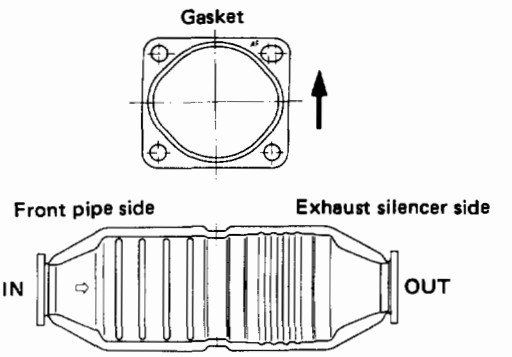

Fig. 6F-10

3. Tighten the fixing bolts to the specified torque.

Torque point	Torque N·m (lb·ft)
Exhaust silencer fixing nuts at chassis side	16 (12)
Exhaust silencer fixing at rear exhaust pipe	43 (32)
Exhaust silencer fixing bolts at converter	43 (32)

REAR EXHAUST PIPE

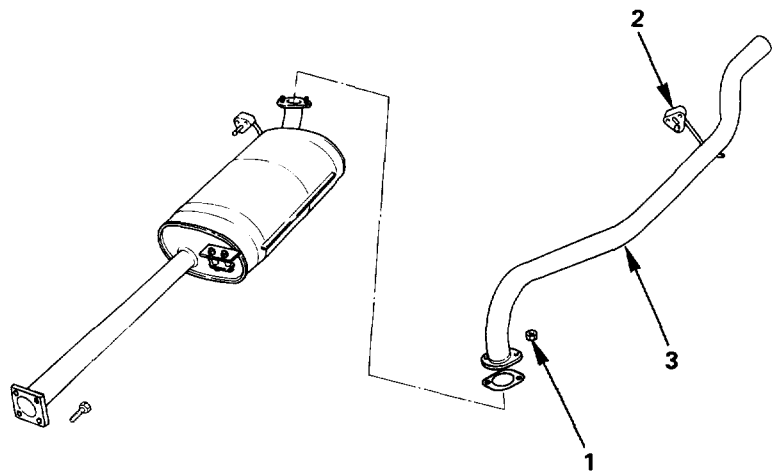

Removal steps
1. Rear exhaust pipe fixing nuts
2. Mounting rubber
3. Rear exhaust pipe

Installation steps
to install, follow the removal steps in the reverse order.

Fig. 6F-11

REMOVAL

Preparation:
- Battery negative cable.
- Raise the vehicle and support with suitable safety stands.

1. **Rear exhaust pipe fixing nuts**
   - Disconnect rear exhaust pipe at exhaust silencer
2. **Mounting rubber**
3. **Rear exhaust pipe**

INSTALLATION

To install follow the removal steps in the reverse order, noting the following points.

1. Tighten the rear exhaust pipe fixing nuts to the specified torque.

	Torque N·m (lb·ft)	43 (32)

MOUNTING RUBBER

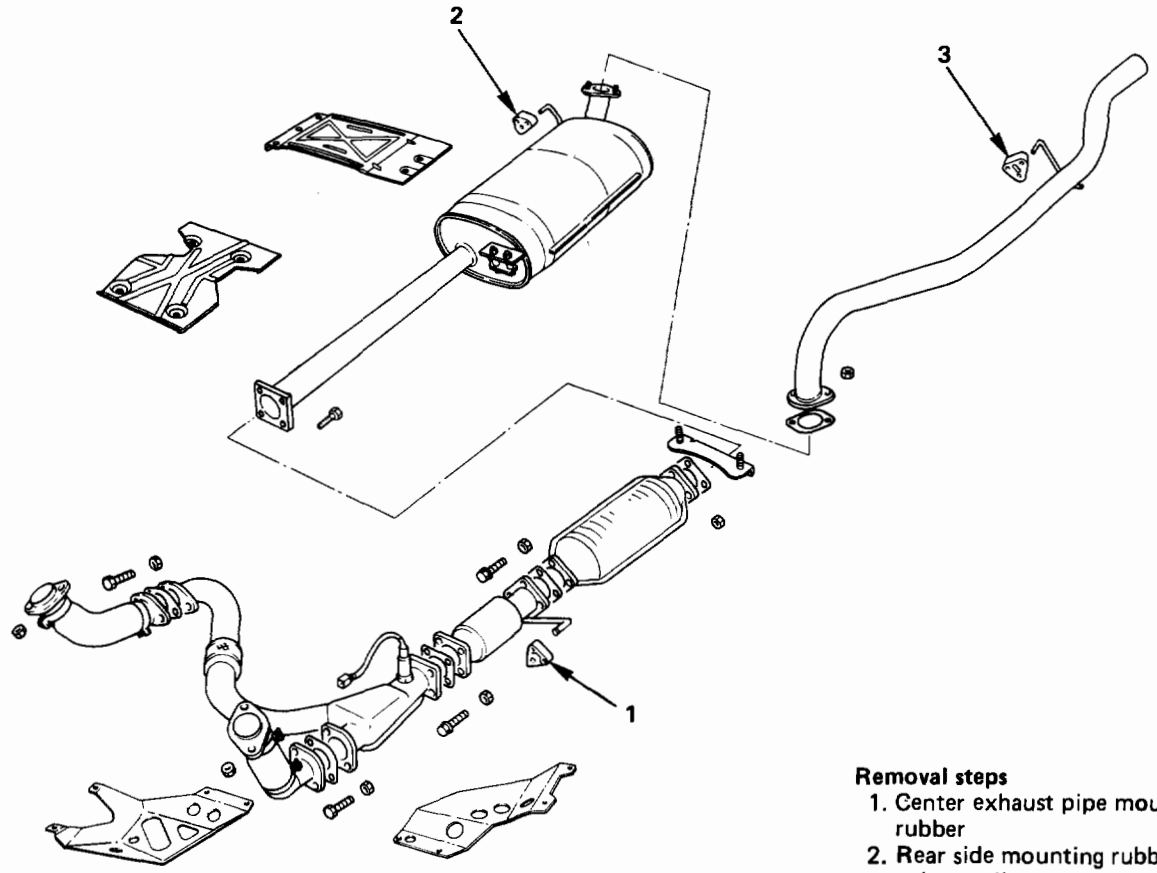

Removal steps
1. Center exhaust pipe mounting rubber
2. Rear side mounting rubber of exhaust silencer
3. Rear exhaust pipe mounting rubber

Installation steps
To install, follow the removal steps in the reverse order.

Fig. 6F-12

REMOVAL

Preparation:
- Battery negative cable.
- Raise the vehicle and support with suitable safety stands.

1. **Center exhaust pipe mounting rubber**
   - Disconnect center exhaust pipe mounting rubber at center exhaust pipe mounting bracket.
2. **Rear side mounting rubber of exhaust silencer**
   - Disconnect exhaust silencer mounting rubber at exhaust silencer mounting bracket.
3. **Rear exhaust pipe mounting rubber**
   - Disconnect rear exhaust pipe mounting rubber at rear exhaust pipe mounting bracket.

INSTALLATION

To install, follow the removal steps in the reverse order.

MAIN DATA AND SPECIFICATIONS

TORQUE SPECIFICATIONS

N·m (lb·ft)

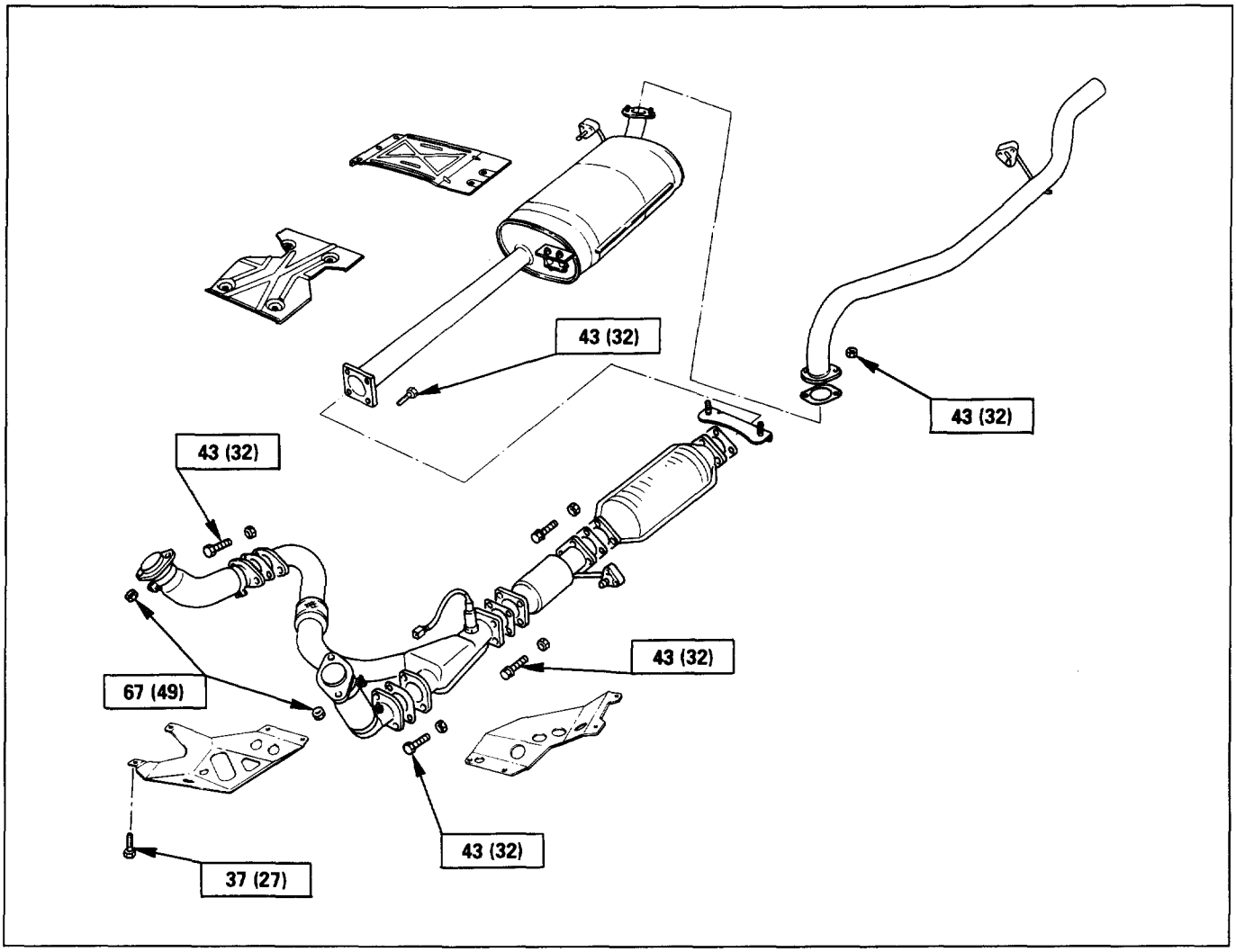

Fig. 6F-13

THIS WAS NOT CRKD.

TRANSMISSION

CONTENTS

Automatic Transmission (4L30-E) ..... Section 7A
Manual Transmission ..... Section 7B
Clutch ..... Section 7C
Transfer Case ..... Section 7D

SECTION 7A

AUTOMATIC TRANSMISSION (4L30-E)

⚠ CAUTION

When fasteners are removed, always reinstall them at the same location from which they were removed. If a fastener needs to be replaced, use the correct part number fastener for that application. If the correct part number fastener is not available, a fastener of equal size and strength (or stronger) may be used. Fasteners that are not reused, and those requiring thread locking compound, will be called out. The correct torque values must be used when installing fasteners that require torque. If the above conditions are not followed, parts or system damage could result.

CONTENTS

General Description 7A-2
Construction 7A-3
Electronic Control Diagram 7A-4
Transmission Control Module (TCM) 7A-5
Control System Diagram 7A-6
Functions of Input/Output Components 7A-11
Range Reference Chart 7A-12
Normal Operation of 1994-95 4L30-E Transmission 7A-13
Diagnosis 7A-15
Introduction 7A-15
Driver Information 7A-16
General Diagnosis Procedure 7A-18
Preliminary Inspection Chart 7A-19
Checking Transmission Fluid Level and Condition 7A-20
Test Driving 7A-22
Mechanical/Hydraulic Diagnosis 7A-23
Check Trans Indicator Chart 7A-23
Mechanical/Hydraulic Diagnosis Symptoms Index 7A-24
Stall Test 7A-41
Line Pressure Test 7A-42
Shift Speed Chart 7A-43
Lock-up Speed Chart 7A-44
Electronic Diagnosis 7A-45
Check Trans Indicator 7A-46
Diagnostic Check 7A-47
"Check Trans" Check 7A-48
Flashing Codes 7A-50
TECH 1 Connection 7A-52
TECH 1 Operating Flow Chart 7A-53
Clear DTC 7A-65
DTC Check 7A-66
F0: Data List Quick Check 7A-67
Chart 1: Diagnosis Connector and Voltage Supply Test 7A-69
Chart 2: Diagnostic Trouble Code (DTC) 7A-71
Chart 3: Transmission and TCM Identification 7A-72
Chart 5: Actuator Test Quick Check 7A-73
Without DTC Set 7A-140
TCM Precautions 7A-145
Intermittent Conditions 7A-146
TCM MEM-CAL Replacement 7A-147
Wiring Diagram 7A-150
Connector Location 7A-152
Connector List 7A-153
On-Vehicle Service 7A-155
Checking Transmission Fluid Level 7A-155
Changing Transmission Fluid 7A-155
Manual Linkage 7A-155
Selector Lever 7A-156
Mode Switch 7A-157
Transmission (With Transfer Case) 7A-160
Solenoid Valve (Main Case Valve Body) 7A-165
Solenoid Valve (Adapter Case Valve Body) 7A-166
Valve Body Assembly (Main Case) 7A-167

Valve Body Assembly (Adapter Case) 7A-168
Transmission Control Module (TCM)..... 7A-169
Speed Sensor (Extension Housing)..... 7A-169
Transmission Oil Temperature Sensor (Adapter Case)..... 7A-170
Front Oil Seal (Converter Housing)..... 7A-170
Rear Oil Seal (Extension Housing) 7A-171
Unit Repair..... 7A-173
Transmission (4L30-E) 7A-173
Converter Housing and Oil Pump Assembly 7A-189
Oil Pump 7A-190
Main Case Valve Body..... 7A-191
Adapter Case Valve Body..... 7A-193
Third Clutch and Sprag Unit..... 7A-195
Third Clutch 7A-196
Sprag Unit 7A-198
Second Clutch 7A-199
3-4 Accumulator Piston 7A-200
Reverse Clutch Piston and Center Support..... 7A-202
Overrun Clutch and Turbine Shaft 7A-204
Main Data and Specifications..... 7A-207
General Specifications..... 7A-207
Torque Specifications..... 7A-208
Special Tools 7A-211
4L30-E Parts List..... 7A-213
Hydraulic Circuit Diagram..... End of This Manual

GENERAL DESCRIPTION

The 4L30-E is a 4-speed fully-automatic transmission. It uses a microcomputer as a control unit to judge running conditions including throttle opening rate and vehicle speed, then it sets the shifting point in the optimum timing so that best driving performance can be achieved.

In addition, the built-in shift mode select function can select three shift modes according to the driver's preference.

- Normal mode – Normal shift pattern.
- Winter mode – Starts in 3rd gear to reduce slippage on ice or snow.
- Power mode has a delayed upshift for when more powerful acceleration is required.

Also, the built-in fail-safe function ("backup mode") assures driving performance even if the vehicle speed sensor, throttle signal or any solenoid fails.

Further, the self-diagnostic function conducts diagnosis in a short time when the control system fails, thus improving serviceability.

The major features of 4L30-E are as follows:

- A compact structure consisting of 2 sets of planetary gears and flat torque converter.
- Electronic control selects the optimum shift mode according to the driving conditions.
- Electronic control maintains the optimum hydraulic pressure for clutch, band brake as well as transmission so that shift feeling is improved.
- Two sets of planetary gears reduce friction of power train.
  Also, a lock-up mechanism in the torque converter reduces fuel consumption.
- Wide gear ratio and high torque rate of torque converter provide excellent starting performance.

MODEL YEAR 1994 – 95 CHANGES

The Transmission Control Module (TCM) for ISUZU TROOPER models equipped with 4L30-E is changed from "BOSCH" to "DELCO ELECTRONICS" manufacture.

The main differences which will be encountered while servicing concerned vehicles are as follows:

Diagnostic Trouble Codes (DTC):

DTC's are changed: For example, DTC for transmission gear error will be as follows depending on the TCM unit:

- On the "DELCO" unit (1994 – 95).....DTC 61
- On the "BOSCH" unit (1993 – prior) .....DTC 41

TCM Pin Connector:

The pin connector is changed. Therefore the connections to be made for troubleshooting also change.

Shift Alteration when TECH 1 Tool is connected to TCM:

SHIFTS WILL BE HARSH WHEN TECH 1 IS CONNECTED.

Connection of TECH 1 automatically forces maximum line pressure during shifts only.

Normal line pressure checks at idle and stall spe can be carried out.

CROSS SECTION

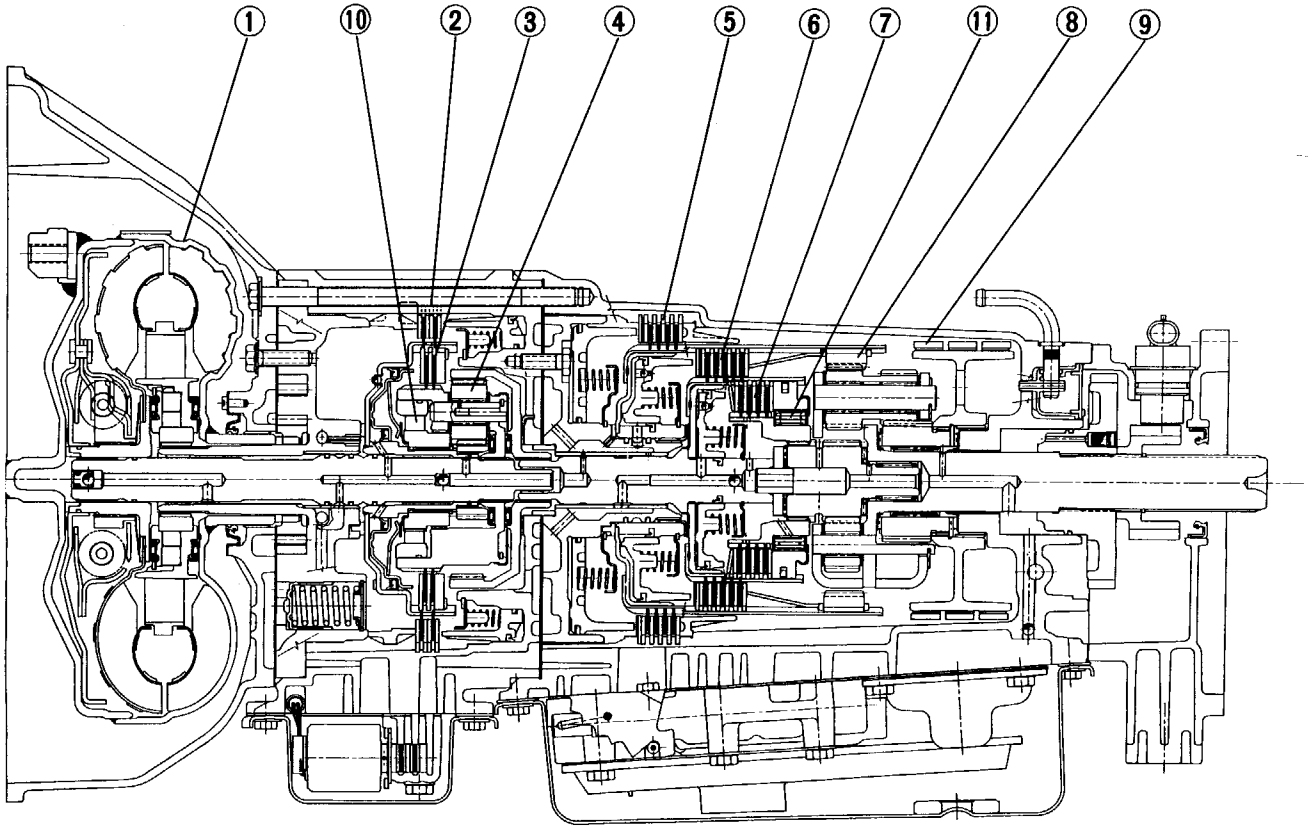

1. TORQUE CONVERTER-CLUTCH (TCC)
2. FOURTH CLUTCH (C4)
3. OVERRUN CLUTCH (OC)
4. OVERDRIVE UNIT
5. REVERSE CLUTCH (RC)
6. SECOND CLUTCH (C2)
7. THIRD CLUTCH (C3)
8. RAVIGNEAUX PLANETARY GEARSET
9. BRAKE BAND (B)
10. OVERDRIVE FREE WHEEL (ONE WAY CLUTCH) (OFW)
11. SPRAG FREE WHEEL (ONE WAY CLUTCH) (PFW)

Fig. 7A-1

ELECTRONIC CONTROL DIAGRAM

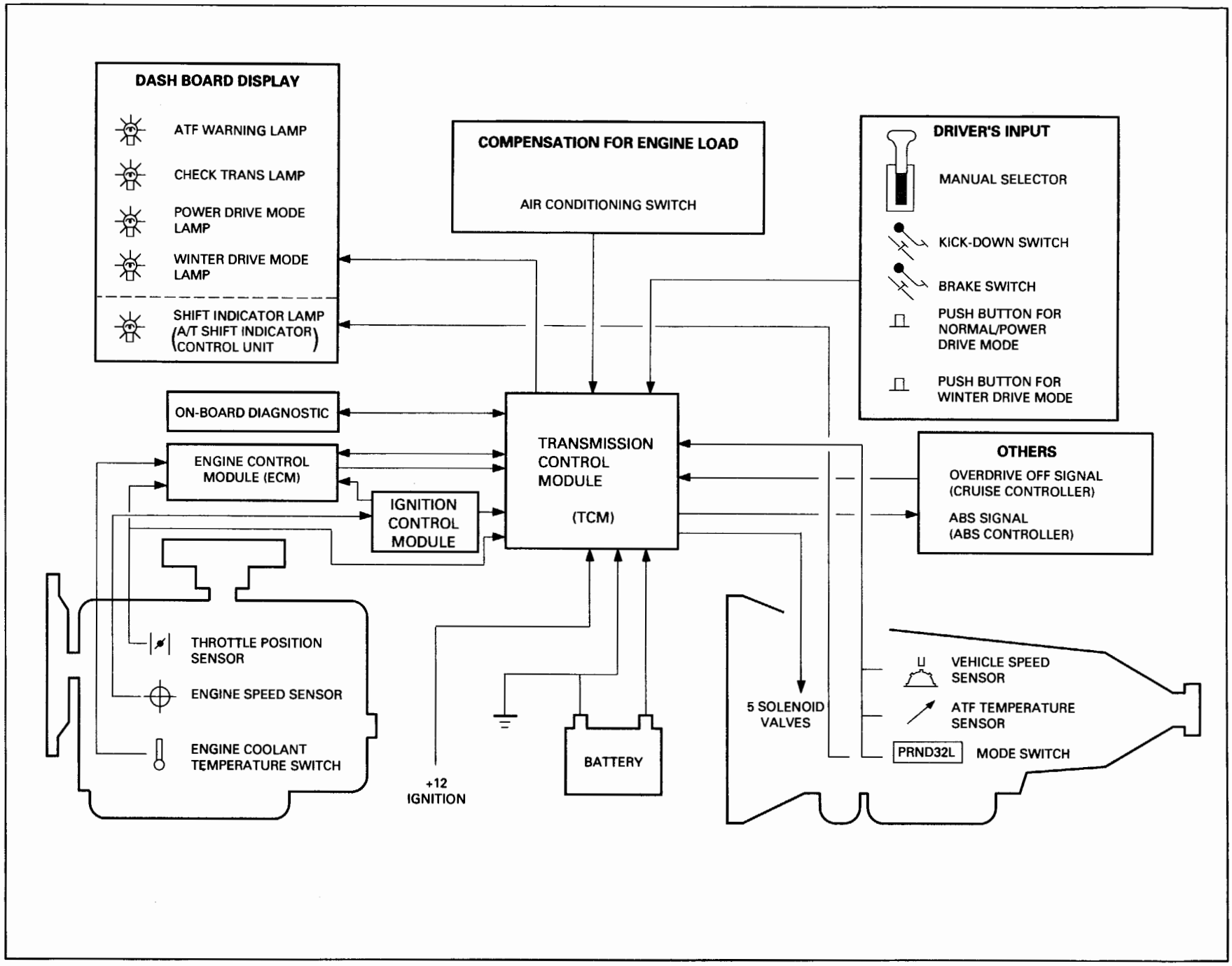

Fig. 7A-2

TRANSMISSION CONTROL MODULE (TCM)

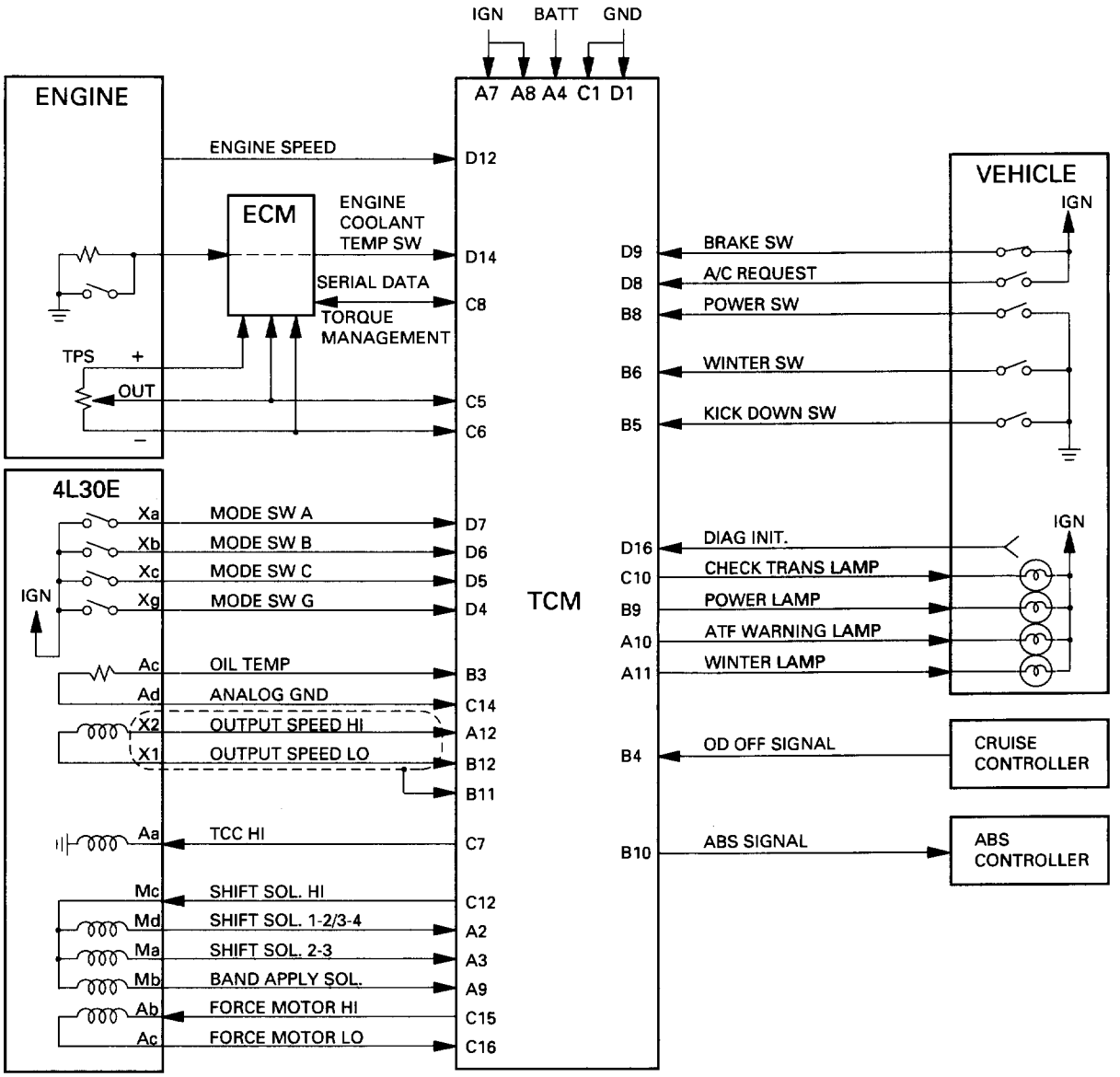

ECM: Engine Control Module
TPS: Throttle Position Sensor
TCC: Torque Converter Clutch
ABS: Anti-Lock Brake System

Fig. 7A-3

CONTROL SYSTEM DIAGRAM

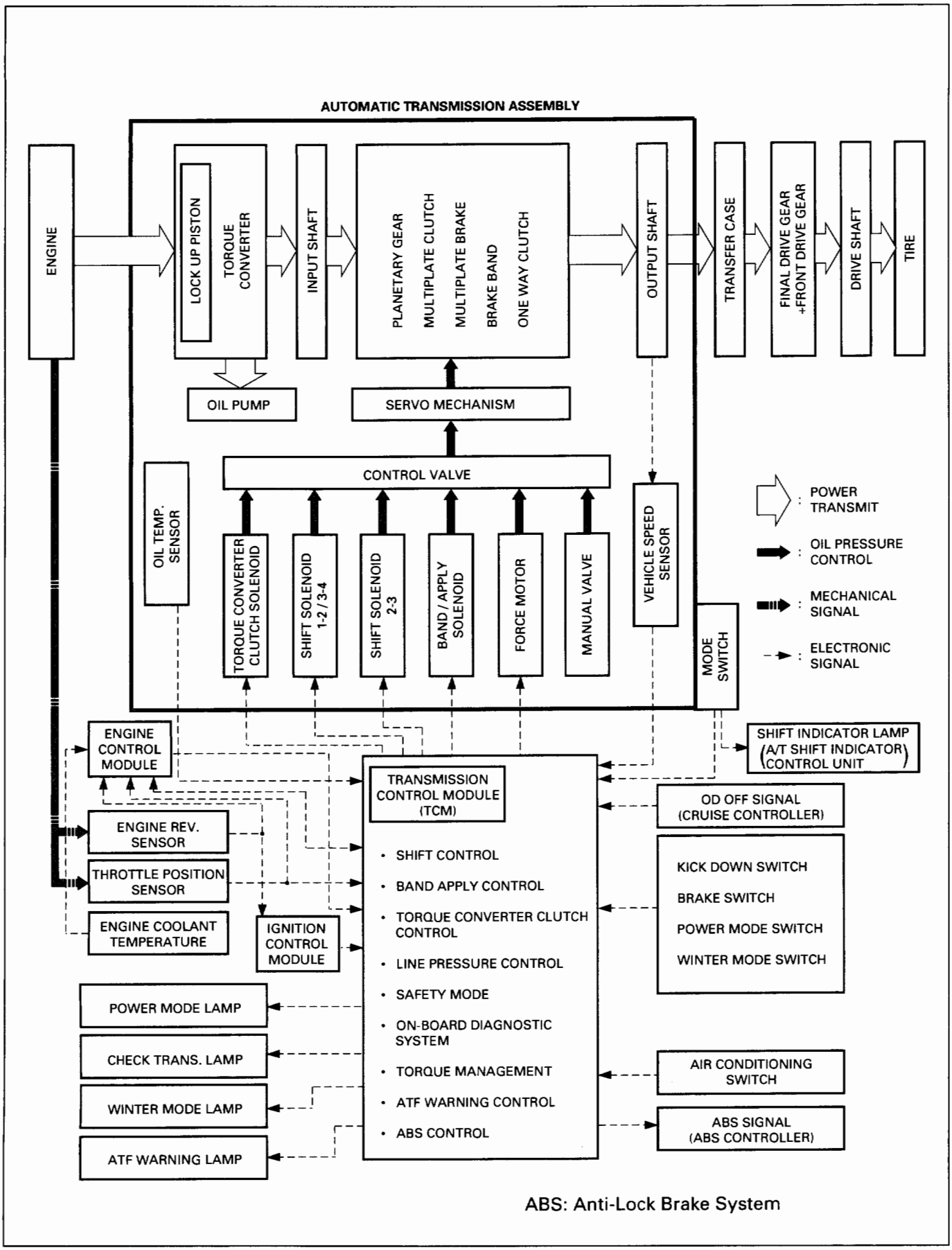

Fig. 7A-4

1. SHIFT CONTROL

The transmission gear is shifted according to the shift pattern selected by the driver.
In shifting gears, the gear ratio is controlled by the ON/ OFF signal using the 1-2/3-4 shift solenoids and the 2-3 shift solenoid.

2. BAND APPLY CONTROL

The band apply is controlled when in the 3-2 downshift (engine overrun prevention) and the garage shift (shock control).
The band apply solenoid is controlled by the signal from the Pulse Width Modulation (PWM) to regulate the flow of the oil.

3. TORQUE CONVERTER CLUTCH CONTROL

The clutch ON/OFF is controlled by moving the converter clutch valve through shifting Torque Converter Clutch (TCC) solenoid using the ON/OFF signal.

4. LINE PRESSURE CONTROL

The throttle signal allows the current signal to be sent to the force motor. After receiving the current signal, the force motor activates the pressure regulator valve to regulate the line pressure.

5. ON-BOARD DIAGNOSTIC SYSTEM

Several malfunction displays can be stored in the Transmission Control Module (TCM) memory, and read out of it afterward.
The serial data lines, which are required for the testing of the final assembly and the coupling to other electronic modules, can be regulated by this function.

6 FAIL-SAFE MECHANISM

If there is a problem in the transmission system, the TCM will go into a "backup" mode. The vehicle can still be driven, but the driver must use the gear lever to shift gears.

7. TORQUE MANAGEMENT CONTROL

The TCM sends the absolute spark advance signal to the Engine Control Module (ECM) while the transmission is being shifted, to control the engine spark timing in compliance with the vehicle running condition to reduce the shocks caused by the change of speed.

8. ATF WARNING CONTROL

The oil temperature sensor detects the ATF oil temperature to control the oil temperature warning, TCC and the winter mode.

9. ABS CONTROL

When the select lever is at "L" or "R" range, a signal is sent to the ABS controller as one of the ABS control conditions.

SHIFT MODE CONTROL

① Mode type

Mode type	Select lever position
Normal drive mode (NOR)	Entire range (excluding "R")
Power drive mode (PWR)	Entire range (excluding "R")
Winter drive mode	"D", "N", "R" and "P" range

② Mode selection

	SWITCH (SW)		LAMP	
Mode type	POW/NOR. SW	WINTER SW	POWER DRIVE LAMP	WINTER DRIVE LAMP
Normal drive mode (NOR)	OFF	OFF	OFF	OFF
Power drive mode (PWR)	ON	OFF	ON	OFF
Winter drive mode	ON/OFF	ON	OFF	ON

However, the winter switch prevails over the PWR/NOR switch.
The mode becomes normal drive mode when the winter switch is operated from ON to OFF.

③ Comparison of mode

(1) The normal drive mode is set at the normal shift points.
(2) The shift points of the power drive mode are shifted to the higher speed side, compared to the normal drive mode.
(3) The winter drive mode is a special mode used exclusively for starting in third gear.

Shift diagram

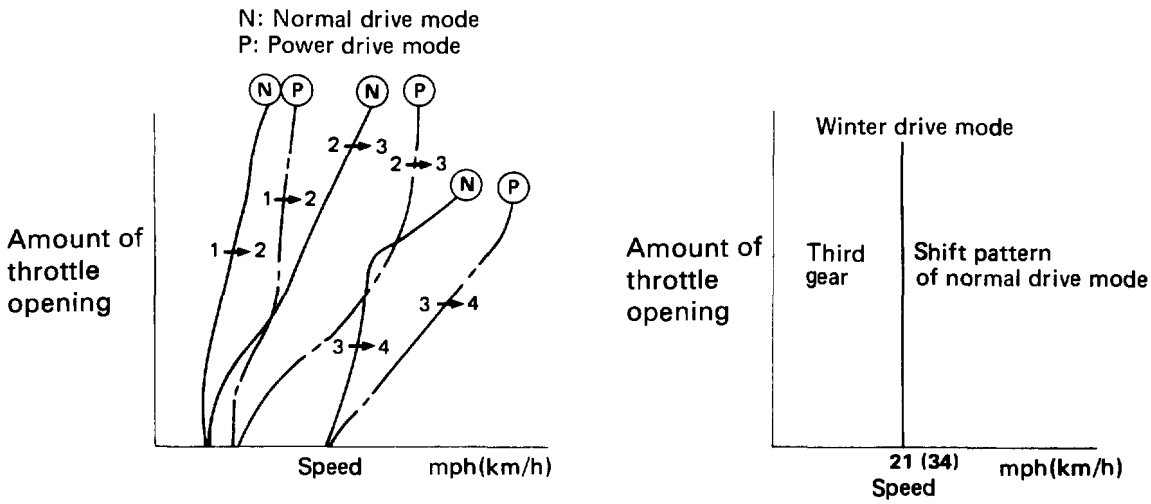

Fig. 7A-5

GEAR SHIFT CONTROL

① Shift pattern

SELECT LEVER RANGE	SHIFT PATTERN
D (Drive)	1 ⇄ 2TCC ⇄ 3TCC ⇄ 4TCC
3 (Third)	1 ⇄ 2TCC ⇄ 3TCC ← 4TCC
2 (Second)	1 ⇄ 2TCC ← 3TCC
L (First)	1 ← 2

TCC = Torque Converter Clutch

② Gear position

The gear is selected by ON/OFF of two solenoids.

GEAR \ SOL	1-2/3-4	2-3
4 (Fourth)	×	×
3 (Third)	○	×
2 (Second)	○	○
1 (First)	×	○
P (Park) R (Reverse) N (Neutral)	×	○

○ = ON

× = OFF

1-2/3-4 SOLENOID (Normally closed) ON → PRESSURE TO SHIFT VALVE

2-3 SOLENOID (Normally open) OFF → PRESSURE TO SHIFT VALVE

③ Selecting gear position

Seven types of positions can be selected according to 5 signals from the mode switch as shown below.

	MODE SW TERMINALS				
SELECT LEVER RANGE	5(D)	8(A)	7(B)	6(C)	3(G)
P (Park)	•	•			•
R (Reverse)	•	•	•		
N (Neutral)	•		•		•
D (Drive)	•		•	•	
3 (Third)	•	•	•	•	•
2 (Second)	•	•		•	
L (First)	•			•	•

• = Continuity

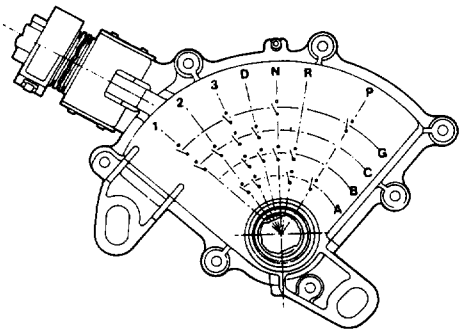

Fig. 7A-5a

WINTER DRIVE MODE

(1) Operation

The winter switch will operate when switched on after the all of following conditions are present.

Conditions:

a) The gear select position is "D" range only
b) Vehicle speed is 7mph (11 km/h) or less
c) Transmission oil temperature is 120°C (248°F) or less
d) Kick-down switch is off
e) Accelerator opening is at 8% or less.

(2) Cancel release

① Cancellation by driver

a) Turning off the winter drive mode switch
b) Shifting select position to "3", "2", or "L"
(Winter drive mode is not canceled by selecting "D", "N", "R", or "P")
c) Ignition key is turned off

② Automatic cancellation

a) When vehicle runs at 21mph (34 km/h) or more for 1 second or more
b) When transmission oil temperature reaches 140°C (284°F) or above

Note: The mode returns to normal drive mode automatically after the winter drive mode is canceled.

BACKUP MODE

If a major system failure occurs which could affect safety or damage the transmission under normal vehicle operation, the diagnostic system detects the fault and overrides the TCM.
The "CHECK TRANS" light flashes to alert the driver, and the transmission must be manually shifted as follows:

Select lever position	Gear Ratio Selected
D	4 (Fourth)
Manual 3	4 (Fourth)
Manual 2	3 (Third)
Manual L	1 (First)
R	Reverse

Shifts are firmer to prevent clutch slip and consequent wear. The fault should be corrected as soon as possible.

FUNCTIONS OF INPUT/OUTPUT COMPONENTS

Components			Function
INPUT SIGNAL	Speed sensor (fixed to transmission (T/M))		Senses rotation of output shaft and feeds the data to Transmission Control Module (TCM)
	Throttle position sensor (TPS) (fixed to engine)		Senses the extent of throttle valve opening and the speed of the throttle valve lever motion to open the valve and feeds the data to TCM (fed to Engine Control Module (ECM) also)
	Brake Switch (SW) (fixed to brake pedal)		Senses whether the driver has pressed the brake pedal or not and feeds the information to TCM
	Kick-down SW (fixed to accelerator pedal)		Senses whether the driver has pushed the accelerator pedal fully or not and feeds the information to TCM
	Mode SW (fixed to T/M)		Senses the select lever position and feeds the information to TCM
	Power drive SW (fixed to front console)		Senses whether the driver has selected the power mode and feeds the information to TCM
	T/M oil temp. sensor		Senses the T/M oil temperature and feeds the data to TCM
	Engine coolant temperature SW		Senses the engine cooling water temperature and feeds the data to TCM (feeds the signal from ECM)
	Engine speed signal		Feeds the signals monitoring engine speed to TCM from Ignition Control Module (fed to ECM also)
	Air conditioning information		Senses whether the air conditioner has been switched on or not and feeds the information to TCM
	On-board diagnostic input		By monitoring the Ground (GND), the location of failure is shown on the T/M monitor lamp ("CHECK TRANS") by flashing the diagnostic trouble code
	Winter switch (fixed to front console)		Senses whether the driver has selected the winter mode, and feeds the information to TCM
	Cruise controller (Overdrive OFF signal)		Downshift takes place when Overdrive OFF signal is received from auto cruise control unit
OUTPUT SIGNAL	SOLENOID	Shift solenoid 1-2/3-4, 2-3	Selects shift point and gear position suited to the vehicle running condition on the basis of TCM output
		Band apply solenoid	Controls oil flow suited to the vehicle running condition on the basis of TCM output
		Torque Converter Clutch solenoid	Controls clutch engagement/disengagement suited to the vehicle running condition on the basis of TCM output
		Force motor (Pressure regulator valve)	Adjusts the oil pump delivery pressure to line pressure suited to the vehicle running condition on the basis of TCM output
	Power drive mode lamp		Informs the driver whether the vehicle is in power mode or not
	Winter drive mode lamp		Informs the driver whether the vehicle is in winter mode or not
	T/M monitor lamp ("CHECK TRANS")		Informs the driver of failure in the system. It also displays the self diagnosis code.
	Data Link Connector (DLC)		When connected with TECH 1 or tester, can communicate the data for function check, etc. (fed to ECM also). When TECH 1 is not connected, can communicate the signal for torque management with ECM.
	Self-diagnosis connector		When short-circuited with the bipolar connector, the T/M monitor lamp displays a failure by code.
	ATF warning lamp		Lights when ATF oil temperature rises.
	ABS signal		When the select lever is at "Reverse" or "L" range, sends a signal to the ABS controller as one of the ABS control conditions.

RANGE REFERENCE CHART

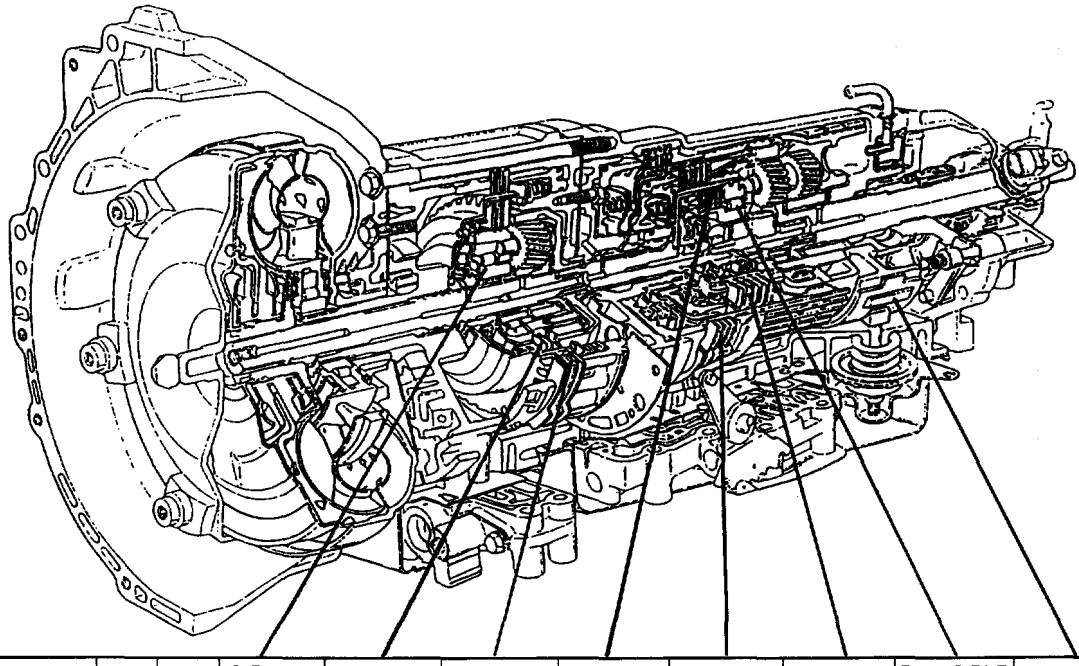

RANGE	GEAR	1-2/3-4 SOL N.C.	2-3 SOL N.O.	O/DRIVE ROLLER CLUTCH (OFW)	OVERRUN CLUTCH (OC)	FOURTH CLUTCH (C4)	THIRD CLUTCH (C3)	REVERSE CLUTCH (RC)	SECOND CLUTCH (C2)	PRINCIPLE SPRAG ASSEMBLY (PFW)	BAND ASSEMBLY (B)	ENGINE BRAKING
P-N		OFF	ON		APPLIED							NO
R	REVERSE	OFF	ON	LD	APPLIED			APPLIED		LD		NO
D	1ST	OFF	ON	LD	APPLIED					LD	APPLIED	NO
	2ND	ON	ON	LD	APPLIED				APPLIED	FW	APPLIED	YES
	3RD	ON	OFF	LD	APPLIED		APPLIED		APPLIED	NE		YES
	4TH	OFF	OFF	FW		APPLIED	APPLIED		APPLIED	NE		YES
3	1ST	OFF	ON	LD	APPLIED					LD	APPLIED	NO
	2ND	ON	ON	LD	APPLIED				APPLIED	FW	APPLIED	YES
	3RD	ON	OFF	LD	APPLIED		APPLIED		APPLIED	NE		YES
2	1ST	OFF	ON	LD	APPLIED		APPLIED			LD	APPLIED	YES
	2ND	ON	ON	LD	APPLIED				APPLIED	FW	APPLIED	YES
L	1ST	OFF	ON	LD	APPLIED		APPLIED			LD	APPLIED	YES

LD : LOCKED IN DRIVE FW : FREEWHEELING NE : NOT EFFECTIVE

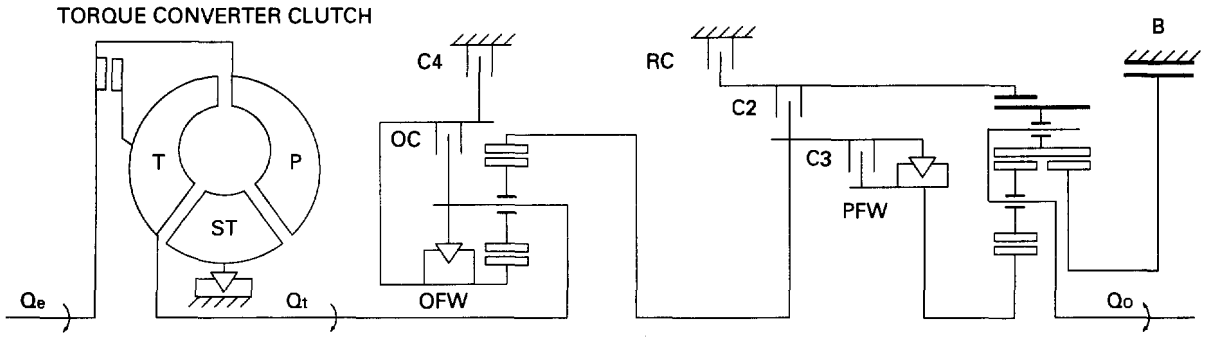

Qe: ENGINE TORQUE Qt: TURBINE TORQUE Qo: OUTPUT SHAFT TORQUE

NORMAL OPERATION OF 1994 – 95 4L30-E TRANSMISSION

1. TORQUE CONVERTER CLUTCH (TCC) APPLICATION CONDITIONS:

Engine coolant temperature must be above 70°C (158°F).

Moreover, TCC is ON in 2nd gear during kick down operation when engine coolant temperature is above 70°C (158°F).

Also, TCC is always ON in 2nd, 3rd & 4th gear when transmission oil temperature is above 140°C (284°F).

2. ATF WARNING LAMP

The ATF warning lamp will be constantly on (not flashing) if the transmission oil temperature is above 145°C (293°F).

The ATF warning lamp goes off again when the transmission oil temperature is below 125°C (257°F).

3. SPECIAL SHIFT PATTERN WHEN THE ENGINE IS COLD:

A special shift pattern is activated when the engine coolant temperature is below 70°C (158°F). (3-4 shifts for example are delayed for small throttle openings and will occur a few MPH higher)

4. SHIFT ALTERATION WITH TECH1 DIAGNOSTIC TOOL CONNECTED:

Shifts will be harsh when TECH1 is connected to TCM: Connection of TECH1 automatically forces maximum line pressure during shifts only.

MEMO

DIAGNOSIS

INTRODUCTION

The systematic trouble shooting information covered by this Section offers a practical and systematic approach to diagnosing 4L30-E transmission, using information that can be obtained from road tests, electrical diagnosis, oil pressure checks or noise evaluation.

The key to correcting a complaint is to make use of all of the available symptoms and logically letting them direct you to the cause.

When dealing with automatic transmission complaints, it is best to gather as many symptoms as possible before making the decision to remove the transmission from the vehicle.
Frequently, the correction of the cause of the complaint does not require removal of the transmission from the vehicle.

DRIVER INFORMATION

To analyze the problem fill a complete description of the owner's complaint.
Please draw a circle around the right information and complete the following form. (Find next page an example of form completed). You can draw a circle around many numbers if you are not sure.

A - Today's date :	Month :	Day :	Year : .....
B - End User Name, Address :			
C - Date of Problem :	Month :	Day :	Year : .....
D - Mileage : ..... Miles / Km	**E - With Ignition ON is CHECK TRANS Indicator :** 1- Flashing 2- Not Flashing	**F -Car load when problem occured :** 1 - Towing a trailer 2- ..... people OR ..... Kg	
G - Weather conditions when problem : 1- Clear 2- Cloudy 3- Rain 4- Snow 5- Unstable 6-Any	**H - Weather Temperature when problem:** 1- Hot 2- Warm 3- Cool 4- Cold 5- Unstable 6- Any	**I - Road Conditions when problem :** 1- Any 2- Inter City 3- Outside City 4- Highway 5 - Uphill 6- Downhill 7- Unpaved 8- Snow 9 - Others :	**J - Frequency of the Problem :** 1- Always 2- Occasional : ..... times/day, ... times/month 3- Only Once 4- Others :
K - Engine Condition : 1- Always 2- At Cold 3- During Warming up 4- After Warming or Hot 5- Others	**L - Engine Speed when the problem occured :** 1- Idling 2- Starting 3- Stalling 4- High RPM 5- Low RPM	**M - Transmission Condition when it occured :** 1- Any 2- Idling 3- Starting 4- Driving 5- Accelerating 6-Coasting 7- In corner 8- Shifting	

N - If there is a Transmission driveability problem BEFORE THE CHECK TRANS INDICATOR WAS FLASHING :

1- No Power in Range : All - P - R - N - D - 3 - 2 - L during a : upshift : 1-2 / 2-3 / 3-4 or downshift : 4-3 / 3-2 / 2-1
2- No shift in Range : All - P - R - N - D - 3 - 2 - L during a : upshift : 1-2 / 2-3 / 3-4 or downshift : 4-3 / 3-2 / 2-1
3- Shift Shock in Range : All - P - R - N - D - 3 - 2 - L during a : upshift : 1-2 / 2-3 / 3-4 or downshift : 4-3 / 3-2 / 2-1
4- Shift Slip in Range : All - P - R - N - D - 3 - 2 - L during a : upshift : 1-2 / 2-3 / 3-4 or downshift : 4-3 / 3-2 / 2-1
5- Shift Delayed in Range : All - P - R - N - D - 3 - 2 - L during a : upshift : 1-2 / 2-3 / 3-4 or downshift : 4-3 / 3-2 / 2-1
6- Shift Point too high in Range : All - P - R - N - D - 3 - 2 - L during a : upshift : 1-2 / 2-3 / 3-4 or downshift : 4-3 / 3-2 / 2-1
7- Shift Point too low in Range : All - P - R - N - D - 3 - 2 - L during a : upshift : 1-2 / 2-3 / 3-4 or downshift : 4-3 / 3-2 / 2-1
8- TCC Shudder in Range : All - P - R - N - D - 3 - 2 - L during a : upshift : 1-2 / 2-3 / 3-4 or downshift : 4-3 / 3-2 / 2-1
9- Noise in Range : All - P - R - N - D - 3 - 2 - L during a : upshift : 1-2 / 2-3 / 3-4 or downshift : 4-3 / 3-2 / 2-1
Noise type : 1- Buzz 2- Whine 3- Clunk 4- Rattle 5- Whistle // 6- light 7-medium 8- heavy
10- Other : ..... in Range : All - P - R - N - D - 3 - 2 - L during a : upshift : 1-2 / 2-3 / 3-4 or downshift : 4-3 / 3-2 / 2-1

O - Other customer concern and comments

P - Isuzu Vehicle Code :	.....	**Q - VIN Number**	.....
R - Date of Vehicle Registration	Month :	Day :	Year : .....
S - Trans. model :	.....	**T - A/T Serial Number :**	.....
U - Your name :	.....		

V - Dealer Name, Address, Phone

Example of form completed.

A - Today's date :	Month : April.....	Day : .13.....	Year : .1994.....
B - End User Name, Address :	Dave Smith 6584, Arlington road Plymouth MI 48170 USA		
C - Date of Problem :	Month : April.....	Day : .8.....	Year : .1994.....
D - Mileage : 12230...Miles / Km	**E - With Ignition ON is CHECK TRANS Indicator :** 1- Flashing 2- Not Flashing	**F - Car load when problem occured :** 1 - Towing a trailer 2- ..2..... people OR ..... Kg	
G - Weather conditions when problem : 1- Clear 2- Cloudy 3- Rain 4- Snow 5- Unstable 6- Any	**H - Weather Temperature when problem:** 1- Hot 2- Warm 3- Cool 4- Cold 5- Unstable 6- Any	**I - Road Conditions when problem :** 1- Any 2- Inter City 3- Outside City 4- Highway 5 - Uphill 6- Downhill 7- Unpaved ~~8- Snow~~ 9 - Others	**J - Frequency of the Problem :** 1- Always 2- Occasional : ..... times/day, ...3... times/month 3- Only Once 4- Others : this means do not take this into account
K - Engine Condition : 1- Always 2- At Cold 3- During Warming up 4- After Warming or Hot 5- Others	**L - Engine Speed when the problem occured :** 1- Idling 2- Starting 3- Stalling 4- High RPM 5- Low RPM	**M - Transmission Condition when it occured :** 1- Any 2- Idling 3- Starting 4- Driving 5- Accelerating 6- Coasting 7- In corner 8- Shifting	

N - If there is a Transmission driveability problem BEFORE THE CHECK TRANS INDICATOR WAS FLASHING :

1- No Power	in Range : All - P - R - N - D - 3 - 2 - L	during a : upshift : 1-2 / 2-3 / 3-4 or downshift : 4-3 / 3-2 / 2-1
2- No shift	in Range : All - P - R - N - D - 3 - 2 - L	during a : upshift : 1-2 / 2-3 / 3-4 or downshift : 4-3 / 3-2 / 2-1
3- Shift Shock	in Range : All - P - R - N - D - 3 - 2 - L	during a : upshift : 1-2 / 2-3 / 3-4 or downshift : 4-3 / 3-2 / 2-1
4- Shift Slip	in Range : All - P - R - N - D - 3 - 2 - L	during a : upshift : 1-2 / 2-3 / 3-4 or downshift : 4-3 / 3-2 / 2-1
5- Shift Delayed	in Range : All - P - R - N - D - 3 - 2 - L	during a : upshift : 1-2 / 2-3 / 3-4 or downshift : 4-3 / 3-2 / 2-1
6- Shift Point too high	in Range : All - P - R - N - D - 3 - 2 - L	during a : upshift : 1-2 / 2-3 / 3-4 or downshift : 4-3 / 3-2 / 2-1
7- Shift Point too low	in Range : All - P - R - N - D - 3 - 2 - L	during a : upshift : 1-2 / 2-3 / 3-4 or downshift : 4-3 / 3-2 / 2-1
8- TCC Shudder	in Range : All - P - R - N - D - 3 - 2 - L	during a : upshift : 1-2 / 2-3 / 3-4 or downshift : 4-3 / 3-2 / 2-1
9- Noise	in Range : All - P - R - N - D - 3 - 2 - L	during a : upshift : 1-2 / 2-3 / 3-4 or downshift : 4-3 / 3-2 / 2-1
Noise type : 1- Buzz 2- Whine 3- Clunk 4- Rattle 5- Whistle // 6- light 7-medium 8- heavy		
10- Other :	in Range : All - P - R - N - D - 3 - 2 - L	during a : upshift : 1-2 / 2-3 / 3-4 or downshift : 4-3 / 3-2 / 2-1

O - Other customer concern and comments :

(This is just an example). Shift shock very harsh overall during a downshift. Not sure if it's the 4-3 or 3-2.

P - Isuzu Vehicle Code :	94 UCR	**Q - VIN Number**	4S2CV58ZXM4324047
R - Date of Vehicle Registration	Month : .November.	Day : ....18.....	Year : ..1993.....
S - Trans. model :	4L30-E	**T - A/T Serial Number :**	96 358 654
U - Your name :	Joe Spring		

V - Dealer Name, Address, Phone

Kent Helfrich

Home-town ISUZU

900 - 999 - 9999

GENERAL DIAGNOSIS PROCEDURE

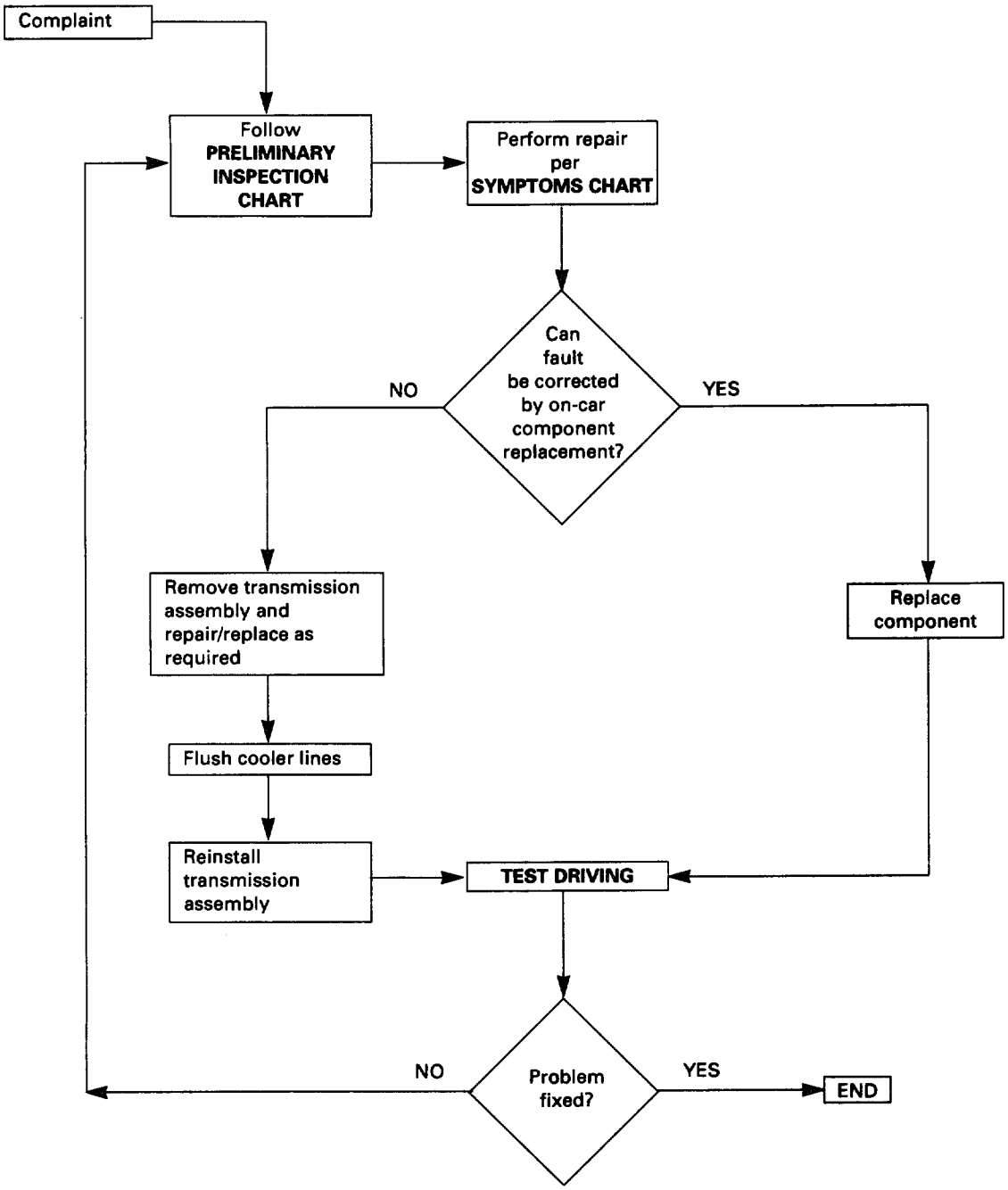

PRELIMINARY INSPECTION CHART

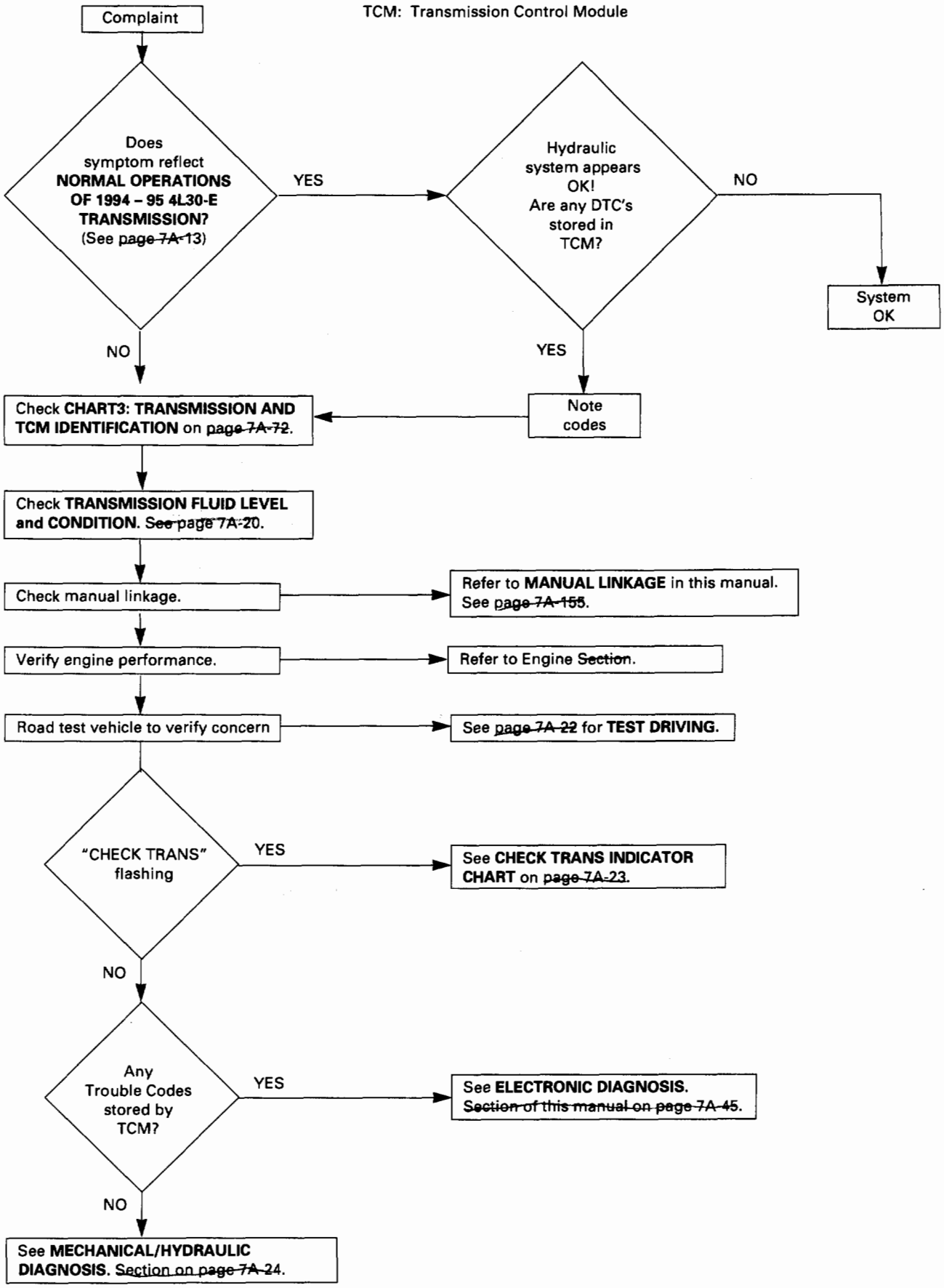

CHECKING TRANSMISSION FLUID LEVEL AND CONDITION

Checking fluid level and condition (color and odor) at regular intervals will provide early diagnosis information about the transmission. This information may be used to correct a condition that, if not detected early, could result in major transmission repairs.

IMPORTANT: When new, automatic transmission fluid is red in color. As the vehicle is driven, the transmission fluid will begin to look darker in color. The color may eventually appear light brown.

A DARK brown color with burnt odor may indicate excessive fluid deterioration and signal a need for fluid change.

FLUID LEVEL

When adding or changing fluid, use only DEXRON ®-III.

Refer to the Maintenance and Lubrication (Section 0 of this manual) for maintenance information and servicing interval.

> **⚠ CAUTION: DO NOT OVERFILL.**
>
> **Overfilling will cause foaming, loss of fluid, abnormal shifting and possible damage to the transmission.**

1. Start engine and drive vehicle until normal A/T oil operating temperature is reached:

   NOTE: The automatic transmission fluid level must be checked with the vehicle at normal A/T oil operating temperature: 75 TO 85°C (167 TO 185°F) MEASURED WITH TECH1 SCAN TOOL.

   Temperature will greatly affect transmission fluid level.
   If the vehicle is not at normal A/T oil operating temperature and the proper checking procedures are not followed, the result could be a false reading of the fluid level indicator and an incorrect adjustment of the fluid level.
2. Park vehicle on level ground.
3. Move gear selector to "Park".
4. Apply parking brake and block wheels.
5. Allow vehicle to idle for 3 minutes with all accessories turned off.
6. Check fluid level with engine running at idle:
   Fluid should be in "HOT" area on A/T dipstick (Fig. 7A-6).
   Check also color and condition (Refer to next page.)

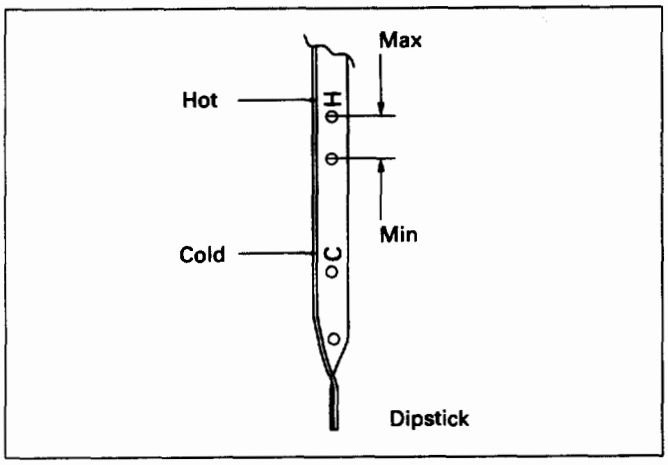

Fig. 7A-6

> **⚠ CAUTION:**
>
> **DO NOT CHECK FLUID LEVEL UNDER THESE CONDITIONS:**
>
> - At high ambient temperature above 30°C (86°F).
> - Immediately after driving at sustained highway speeds.
> - In heavy city traffic during hot weather.
> - If vehicle is towing a trailer.
>
> If the vehicle has been operated under these conditions, shut the engine off and allow the vehicle to "cool" for thirty (30) minutes. After the cool-down period, restart the vehicle and continue from step 2 above.

FLUID CONDITION

	FLUID CONDITION			
	NORMAL*		CONTAMINATED	
COLOR	RED OR LIGHT BROWN	BROWN	NON-TRANSPARENT /PINK	BROWN
DRAIN REQUIRED?	NO	YES	YES	YES
CONTAMI-NATION	NONE	Very small amount of foreign material in bottom of pan	Contamination by coolant or other source	Large pieces of metal or other foreign material in bottom of pan
CORRECT LEVEL & CONDITION	1. LOW LEVEL: A. Add fluid to obtain proper level & check for external leaks. See chart 16 ~~on page 7A-39~~. B. Correct cause of leak. 2. HIGH LEVEL: – Remove excess fluid	– Remove both pans – Change filter – Flush cooler – Add new fluid – Check level	– Repair/replace radiator cooler – Transmission overhaul required – Check for: • Damaged plates and seals • Contaminated solenoids – Flush cooler – Add new fluid – Check level	– Transmission overhaul required – Flush cooler and cooler lines – Add new fluid – Check level

* Fluid should be changed according to maintenance schedule.

TEST DRIVING

Some 4L30-E automatic transmission complaints vehicles will require a test drive as a part of the diagnostic procedure. Some codes will not set unless the vehicle is moving. The purpose of the test drive is to duplicate the customer's complaint condition and set a current Transmission Control Module (TCM) trouble code. Perform this procedure before each 4L30-E automatic transmission repair, and again after repairs are made.

IMPORTANT:

- Duplicate the condition under which the customer's complaint was observed.
- Depending on the complaint, line pressure gauge and the TECH1 scan tool may be required during the test drive.
- During the test drive, it is important to record all necessary data from the areas being monitored, for use in diagnosis. Also listen for and note any unusual noises.

The following procedure should be used to test drive 4L30-E automatic transmission complaint vehicles:

1. Turn the ignition ON without starting the engine. Check that the "CHECK TRANS" lamp comes on for approximately 2 to 3 seconds and then goes out and remains out.
   - If the lamp is flashing, GOTO CHECK TRANS INDICATOR (on page 7A-46).
   - If no serial data is present, see Chart 1: DIAGNOSTIC CONNECTOR AND VOLTAGE SUPPLY TEST (on page 7A-69 and 7A-70).
   - If the lamp stays ON or stays OFF, GOTO "CHECK TRANS" CHECK (on page 7A-48).

   NOTE:
   Remember that, when TECH1 is connected, line pressure will be at maximum during shifts.
2. Drive the vehicle. During the test drive be sure that the transmission achieves normal operating temperature (approx. 20 minutes). Allow the transmission to go through all of its gear ranges, checking shift timing and firmness. Duplicate the owner's complaint condition as closely as possible during the test drive.
3. If, during the test drive, the "CHECK TRANS" lamp comes on, use the TECH1 to check for trouble codes.
4. If, during the test drive, a problem is felt, but the "CHECK TRANS" lamp does not come on and no trouble codes are present, drive the vehicle with the TCM disconnected (manually shifting the vehicle).
   - In Manual L, the vehicle operates in first gear.
   - In Manual 2, the vehicle operates in third gear.
   - In Manual 3 or "D", the vehicle operates in fourth gear.

   If the problem still exists with the TCM disconnected, refer to the MECHANICAL/ HYDRAULIC DIAGNOSIS in this Section.
5. If no problem has been found at this point, check all underhood connections that supply power to the TCM and ignition fuses. Physically and visually inspect all the TCM harness connectors for loose or corroded terminals. Inspect the TCM ground points.

MECHANICAL/HYDRAULIC DIAGNOSIS

CHECK TRANS INDICATOR CHART

PERFORM PRELIMINARY INSPECTION FIRST!

When the "CHECK TRANS" indicator is flashing, it indicates that a problem related to the transmission, the Transmission Control Module (TCM), or the vehicle harness has occurred:

The system is now operating in a "BACKUP MODE" where the risk of further damaging the transmission has been reduced. The vehicle may be shifted manually.

If the initial problem is intermittent or seldom, switching OFF/ON the engine might allow normal operation again until the problem re-occurs.

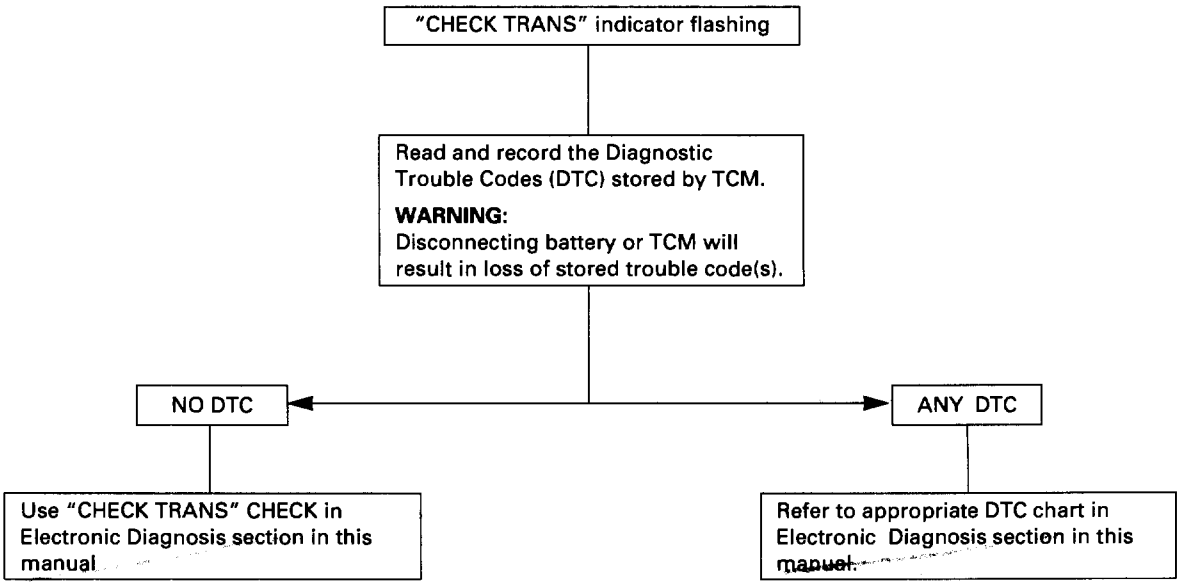

BACKUP MODE PATTERN:

- No automatic shifting
- Manual shifting only
- "CHECK TRANS" Flashing

SHIFT LEVER POSITION	GEAR SELECTED
P	P
R	R
N	N
D	4
3	4
2	3
L	1

MECHANICAL/HYDRAULIC DIAGNOSIS SYMPTOMS INDEX

PERFORM PRELIMINARY INSPECTION FIRST!

CHART	SYMPTOMS	PAGE
1	NO ENGINE START IN NEUTRAL OR PARK	7A-25
2	NO FORWARD GEARS IN ANY RANGE/NO REVERSE	7A-26
3	NO ENGINE BRAKE IN ANY RANGE	7A-27
4	POOR SHIFTING IN ALL GEARS (ALL HARSH OR ALL SOFT)	7A-28
5a	DELAYS IN DRIVE AND REVERSE	7A-29
5b	DELAYS IN REVERSE ONLY	
6	DIAGNOSTIC TROUBLE CODE (DTC) 61	7A-30
7	HARSH 1-2 SHIFT	7A-31
8	HARSH 3-4 SHIFT	
9a	3-2 DOWNSHIFT COMPLAINT	7A-32
9b	HARSH SHIFT WHEN SHIFTING INTO "D" OR ACCELERATING FROM STOP	
9c	COASTDOWN HARSH SHIFT OR CLUNK AT 3-2 DOWNSHIFT	
10	INTERMITTENT 4TH TO 2ND GEAR DOWNSHIFT AT STEADY SPEED	7A-33
11	ENGINE FLARE AT SHIFTING DURING TURNING ONLY	7A-34
12	ENGINE FLARE DURING 1-2 OR 2-3 SHIFT	
13	SHUDDER ONLY DURING TORQUE CONVERTER CLUTCH (TCC) APPLYING	7A-35
14	POSSIBLE CAUSES OF TRANSMISSION NOISE	7A-36
15a	POSSIBLE CAUSES OF LOW LINE PRESSURE	7A-37
15b	POSSIBLE CAUSES OF HIGH LINE PRESSURE	7A-38
16	POSSIBLE CAUSES OF TRANSMISSION FLUID LEAKS	7A-39

NOTE:
Numbers with parenthesis on the following charts refer to Parts List at end of this Section.

CHART 1: NO ENGINE START IN NEUTRAL OR PARK

PERFORM PRELIMINARY INSPECTION FIRST!

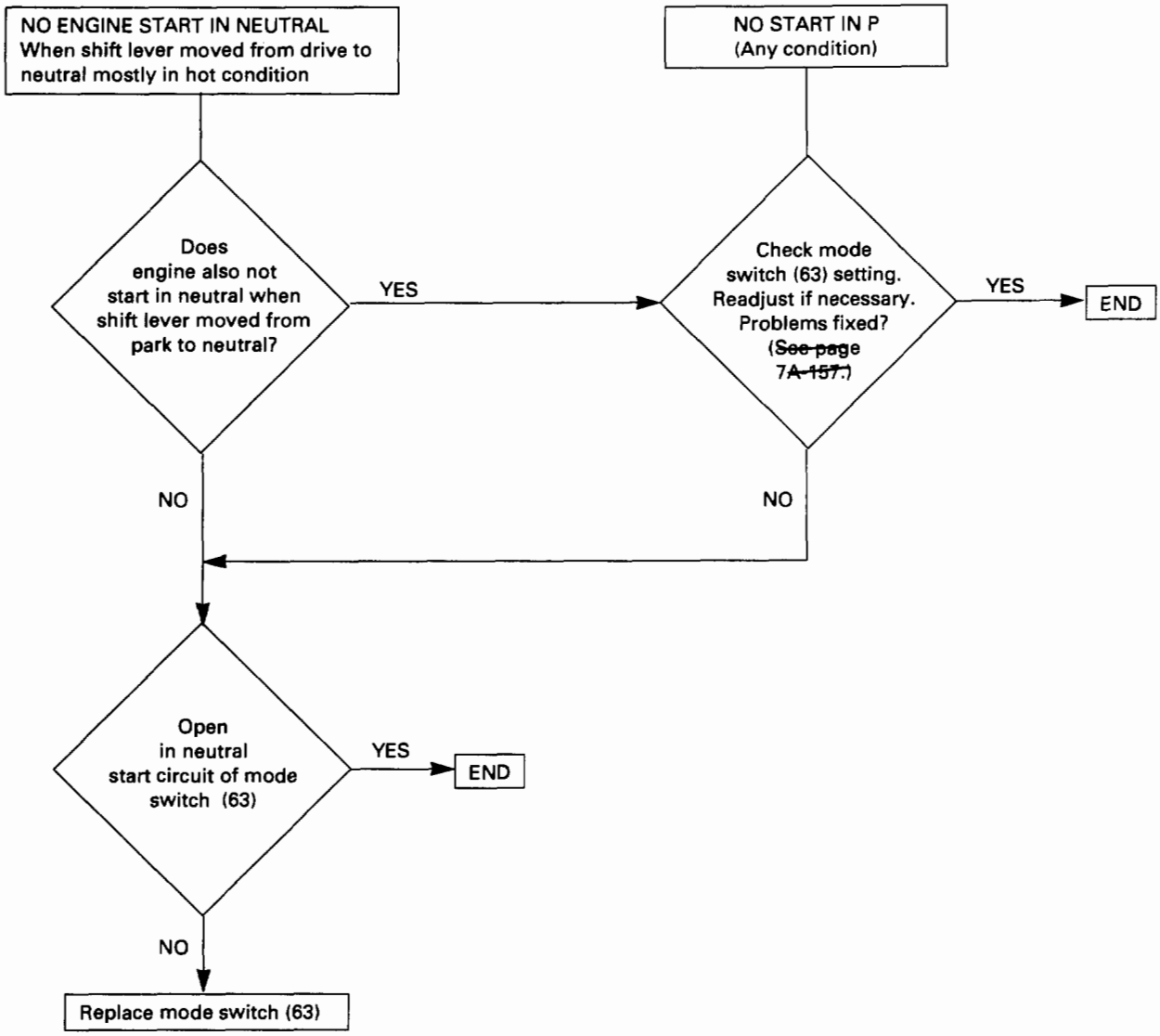

( ) Refer to Parts List at the end of this Section.

CHART 2: NO FORWARD GEARS IN ANY RANGE/NO REVERSE

PERFORM PRELIMINARY INSPECTION FIRST!

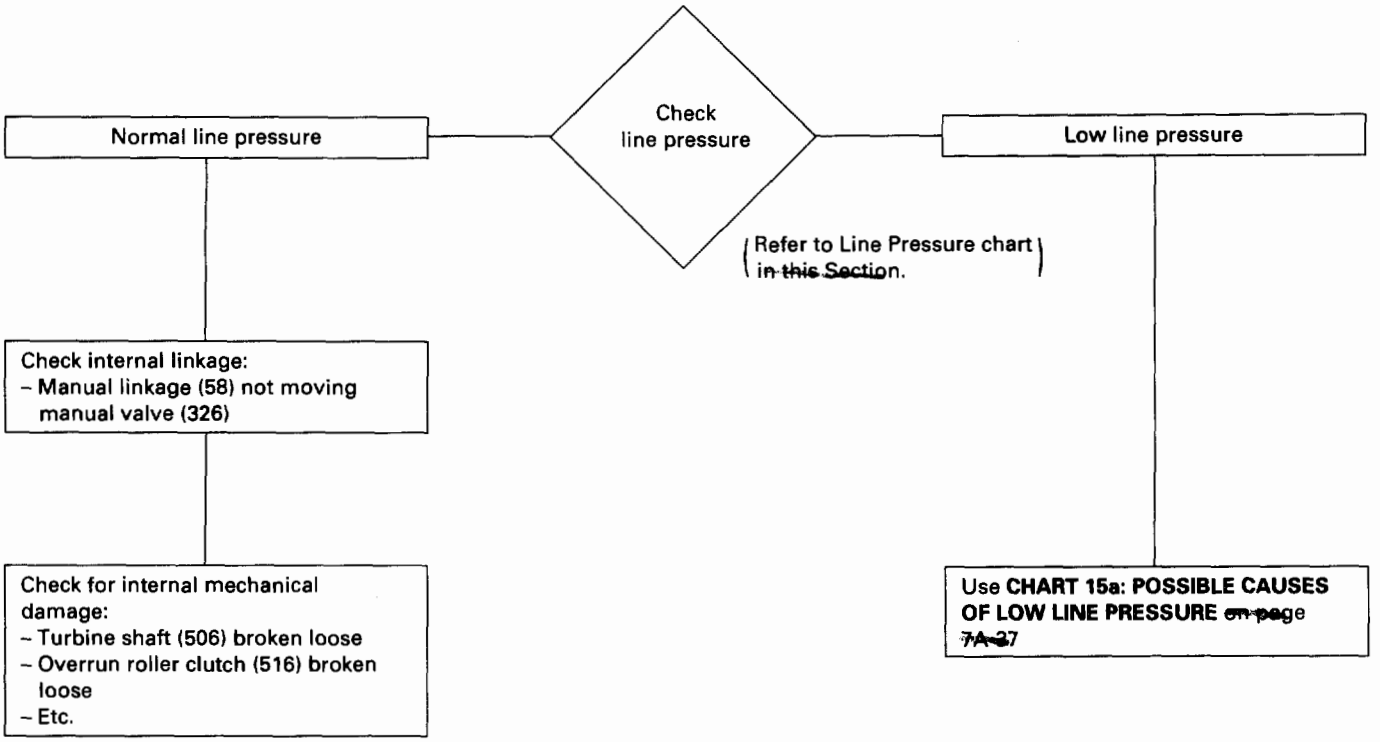

( ) Refer to Parts List at the end of this Section.

CHART 3: NO ENGINE BRAKE IN ANY RANGE

PERFORM PRELIMINARY INSPECTION FIRST!

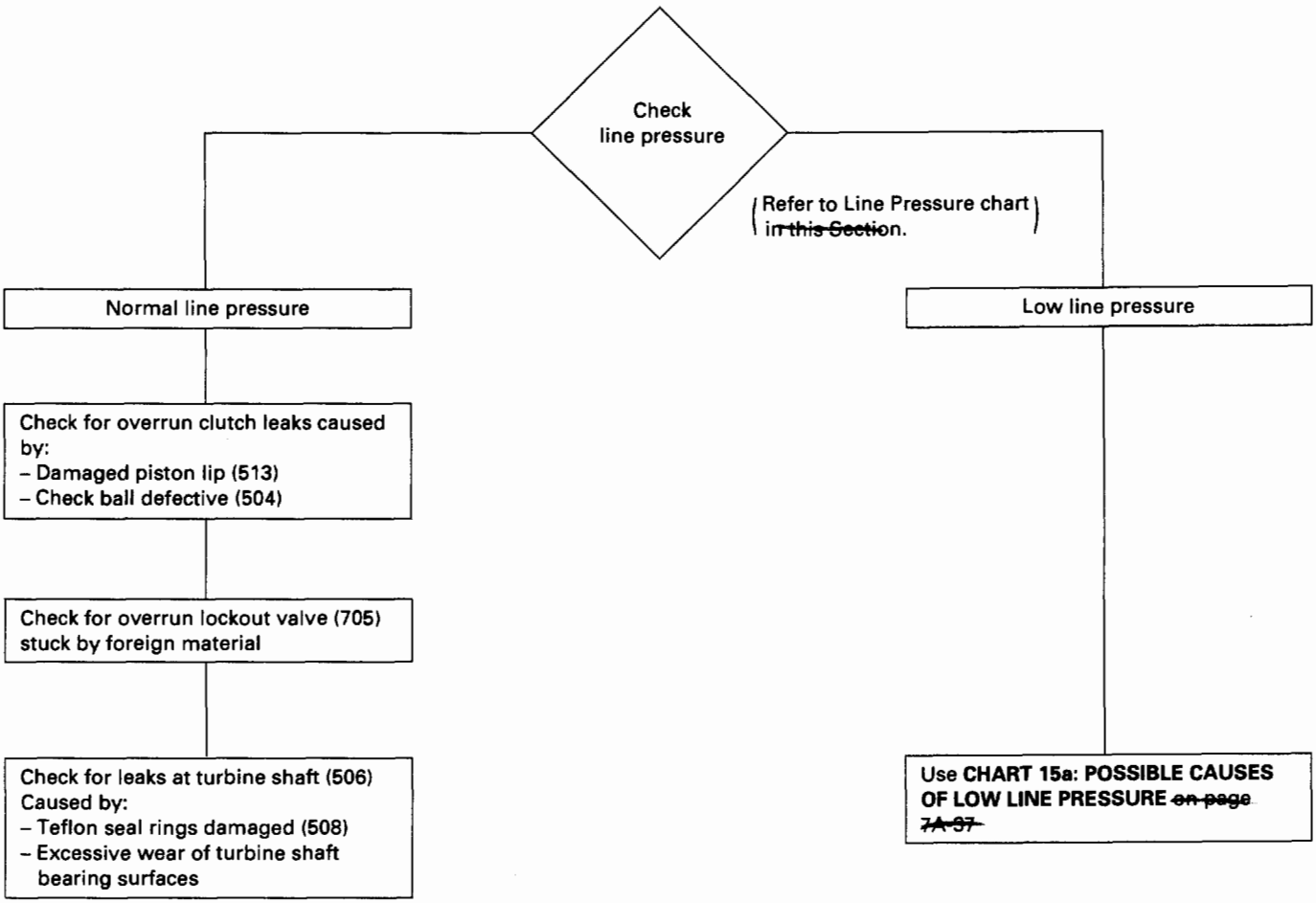

( ) Refer to Parts List at the end of this Section.

CHART 4: POOR SHIFTING IN ALL GEARS (ALL HARSH OR ALL SOFT)

PERFORM PRELIMINARY INSPECTION FIRST!

Check line pressure

(Refer to Line Pressure chart ~~in this Section~~.)

Low line pressure

Use **CHART 15a: POSSIBLE CAUSES OF LOW LINE PRESSURE** ~~on page 7A-37~~

High line pressure

Use **CHART 15b: POSSIBLE CAUSES OF HIGH LINE PRESSURE** ~~on page 7A-38~~

Check for these conditions which could affect clutch apply time:

- Defective band apply solenoid (323)
- Defective servo or/and accumulator piston
- Excessive clutch piston travel

Check of possible causes of internal leaks:
- Cut or damaged sealing ring(s)
- Damaged sealing gasket (s)
- Check ball missing or out of location in 2nd and 3rd clutch pistons

Check for causes of burned clutch plates or band

NOTE:
When TECH1 is connected, line pressure will be at maximum during shifts.

( ) Refer to Parts List at the end of this Section.

CHART 5a: DELAYS IN DRIVE AND REVERSE

PERFORM PRELIMINARY INSPECTION FIRST!

NOTE: A short delay (less than 3 seconds) when first engaging drive or reverse after allowing vehicle to sit overnight is normal.

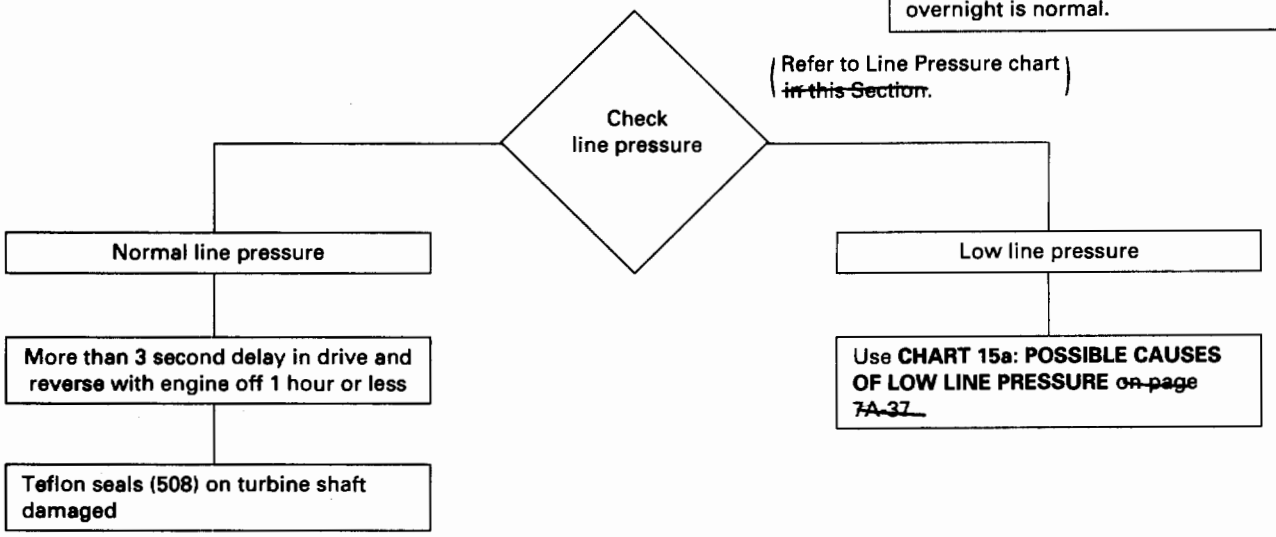

CHART 5b: DELAYS IN REVERSE ONLY

PERFORM PRELIMINARY INSPECTION FIRST!

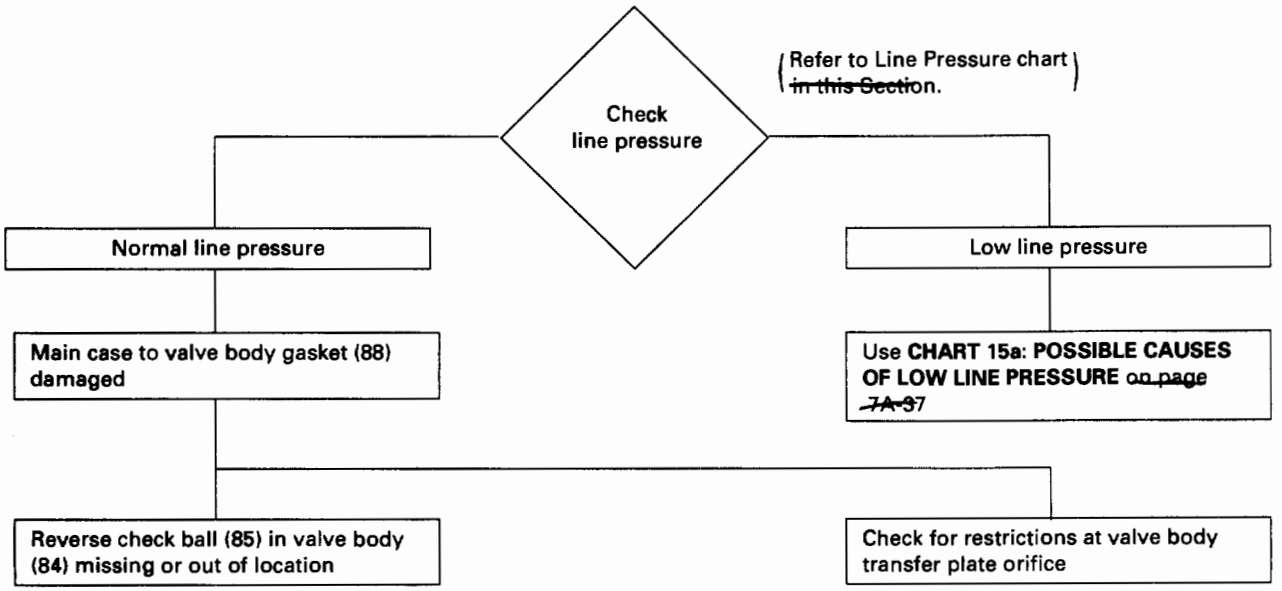

( ) Refer to Parts List at the end of this Section.

CHART 6: DIAGNOSTIC TROUBLE CODE (DTC) 61

PERFORM PRELIMINARY INSPECTION FIRST!

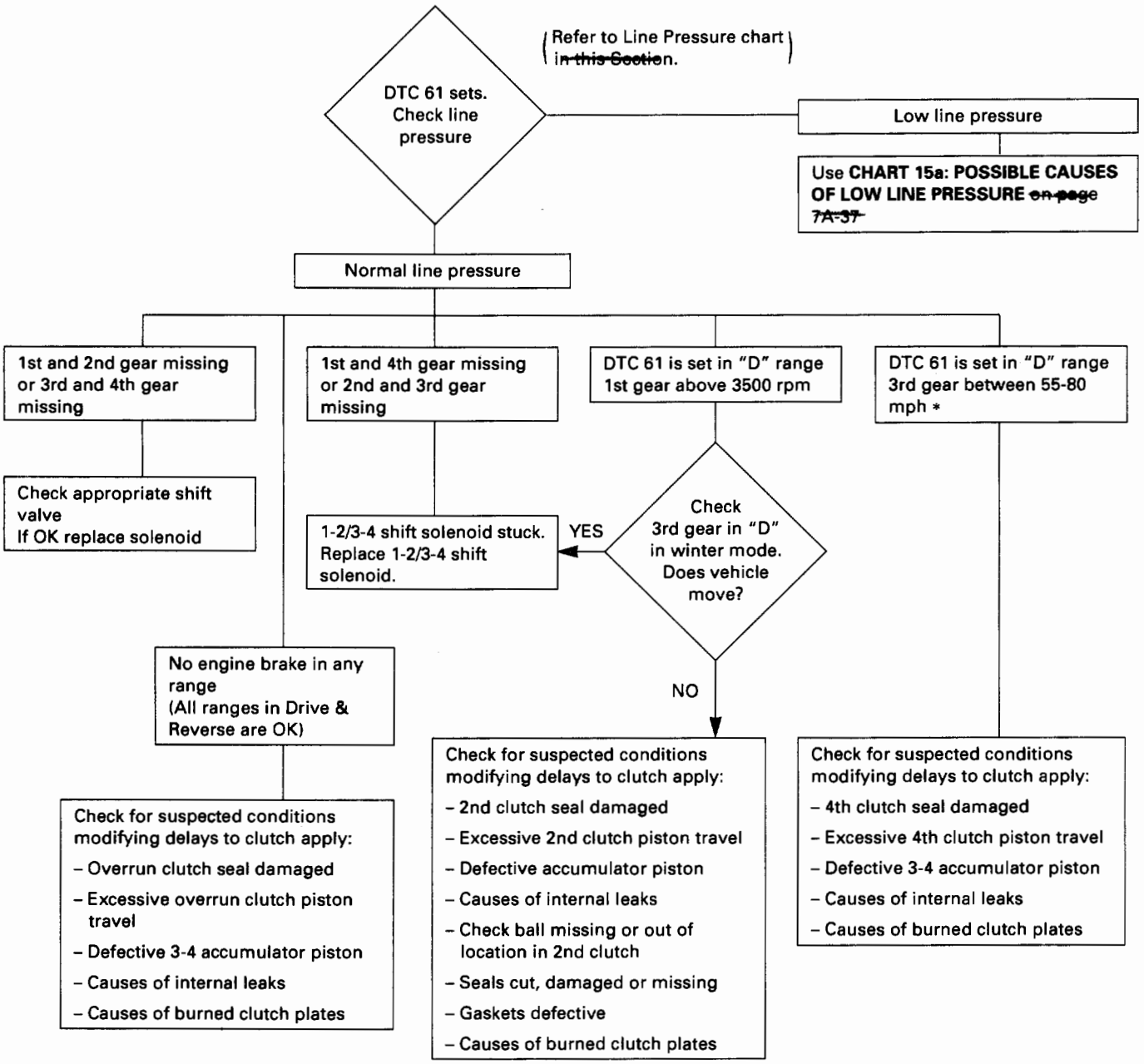

* : Perform this test within safe and legal limits.

CHART 7: HARSH 1-2 SHIFT

PERFORM PRELIMINARY INSPECTION FIRST!

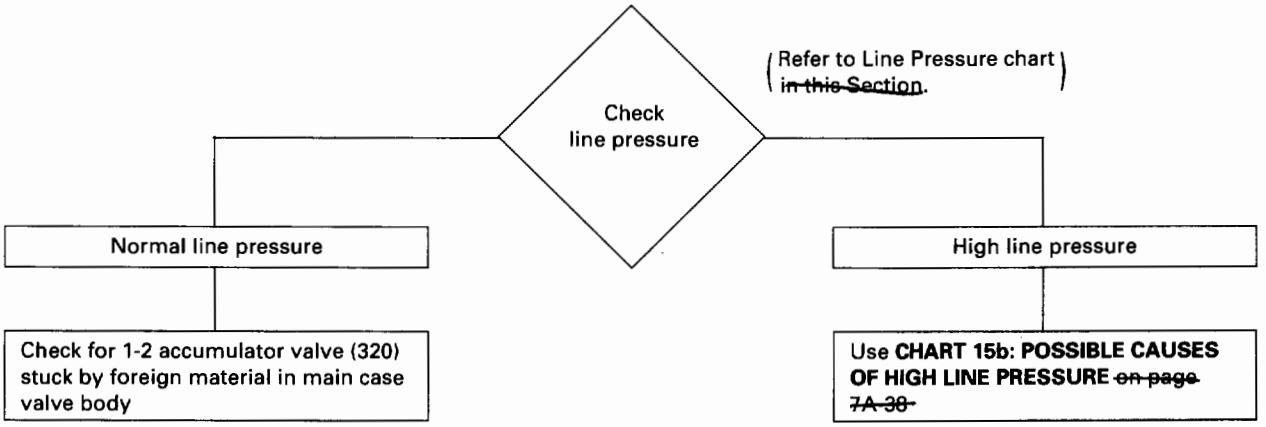

CHART 8: HARSH 3-4 SHIFT

PERFORM PRELIMINARY INSPECTION FIRST!

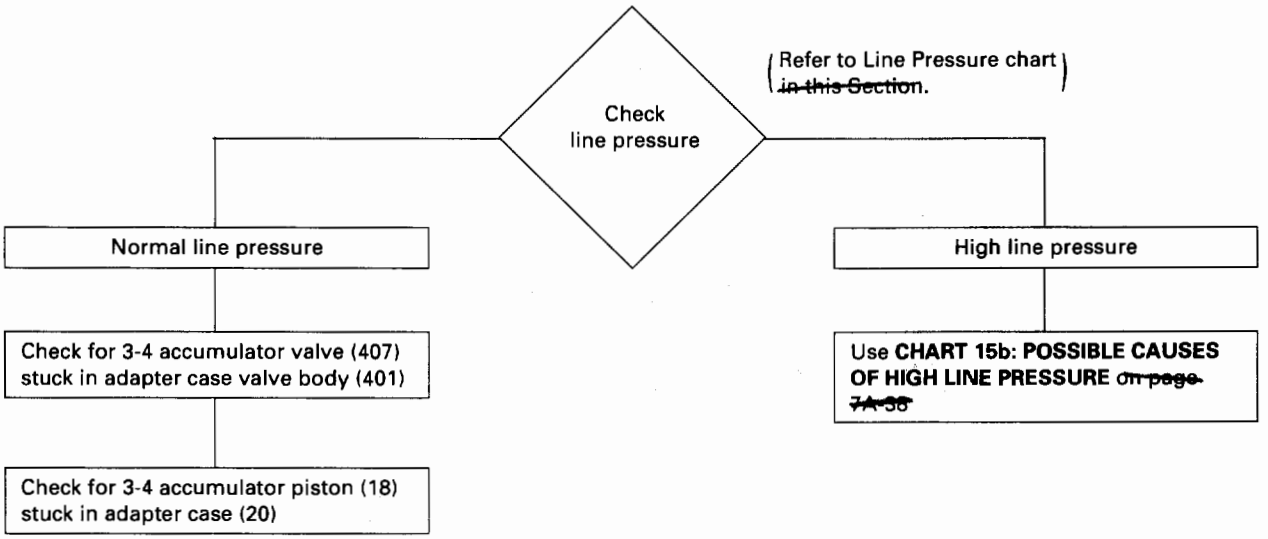

( ) Refer to Parts List at the end of this Section.

CHART 9a: 3-2 DOWNSHIFT COMPLAINT

PERFORM PRELIMINARY INSPECTION FIRST!

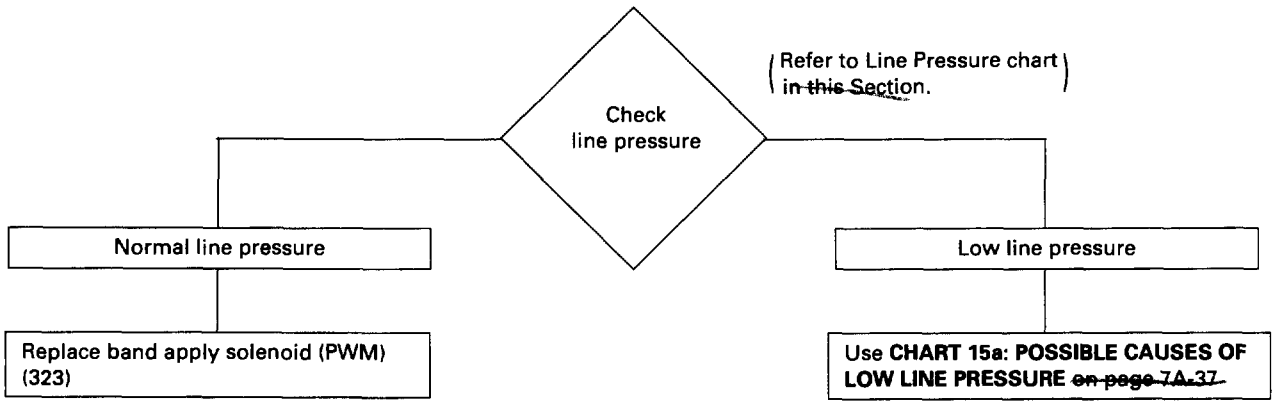

CHART 9b: HARSH SHIFT WHEN SHIFTING INTO "D" OR ACCELERATING FROM STOP

PERFORM PRELIMINARY INSPECTION FIRST!

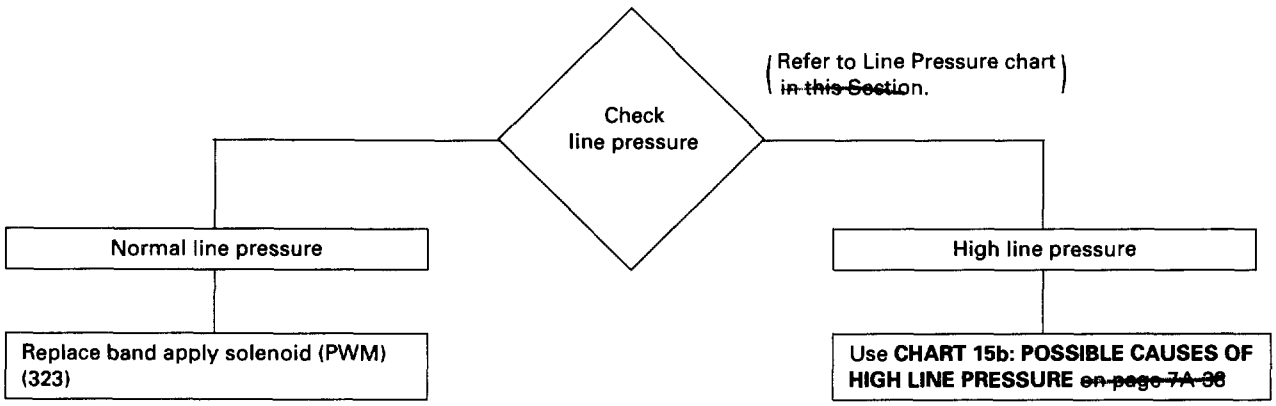

CHART 9c: COASTDOWN HARSH SHIFT OR CLUNK AT 3-2 DOWNSHIFT

PERFORM PRELIMINARY INSPECTION FIRST!

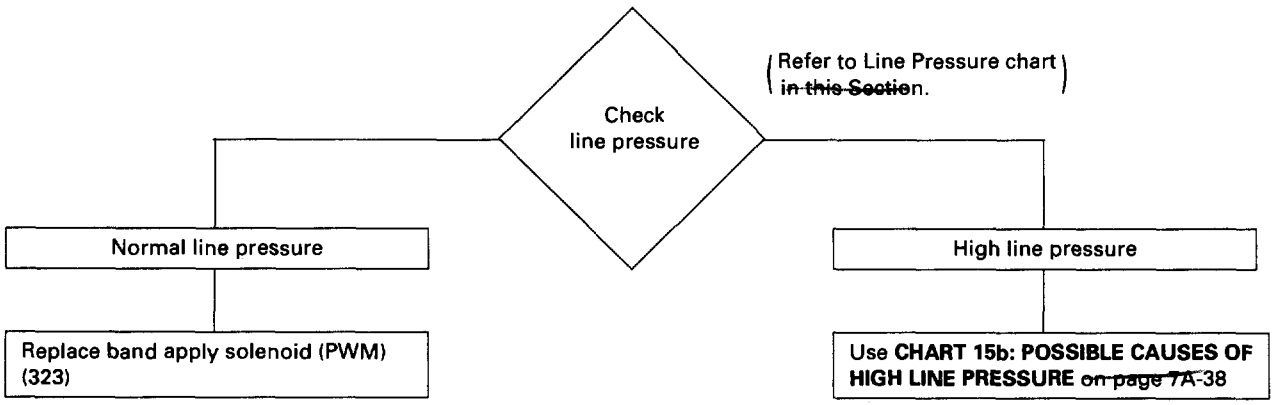

( ) Refer to Parts List at the end of this Section.

CHART 10: INTERMITTENT 4TH TO 2ND GEAR DOWNSHIFT AT STEADY SPEED

PERFORM PRELIMINARY INSPECTION FIRST!

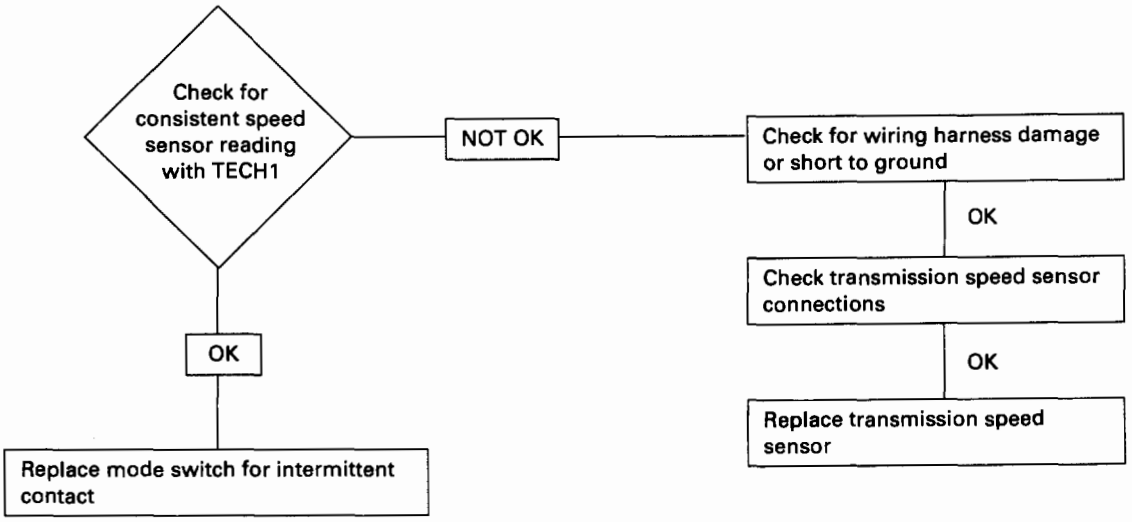

CHART 11: ENGINE FLARE AT SHIFTING DURING TURNING ONLY (USUALLY WITH WARM ENGINE)

PERFORM PRELIMINARY INSPECTION FIRST!

Leak at transmission oil filter, gasket, or wrong filter type

Replace transmission oil filter and gasket

CHART 12: ENGINE FLARE DURING 1-2 OR 2-3 SHIFT

PERFORM PRELIMINARY INSPECTION FIRST!

Check line pressure

(Refer to Line Pressure chart ~~in this Section~~.)

Normal line pressure

Check for 1-2 accumulator valve (320) stuck

Check for servo piston (106) leaks

Check for band apply solenoid (323) stuck

Low line pressure

Use **CHART 15a: POSSIBLE CAUSES OF LOW LINE PRESSURE** ~~on page 7A-~~37

( ) Refer to Parts List at the end of this Section.

CHART 13: SHUDDER ONLY DURING TORQUE CONVERTER CLUTCH (TCC) APPLYING

PERFORM PRELIMINARY INSPECTION FIRST!

TCC shudder is one of the most commonly misdiagnosed conditions in an automatic transmission. The key to diagnosing TCC shudder is to note when it happens and under what conditions. Once the TCC has been fully applied, it is nearly impossible to make it shudder. TCC shudder (short burst of noise normally less than 1 second) will only occur during clutch applying. It is not a steady state condition.

Drive until whole drivetrain is at normal operating temperature.
- On 4WD vehicles, the test must be performed with transfer case selector lever in "2H" position.
- Shudder is a SHORT BURST OF NOISE NORMALLY LESS THAN 1 SECOND IN DURATION, and can be induced by the following maneuver:

From coast condition at 50 mph in "D" range (Normal mode), depress the throttle to 1/4-1/3 throttle.
If present, shudder (short burst of noise normally less than 1 sec.) will occur within 5 seconds together with TCC applying.
(TECH1 may be used to determine the exact time of TCC applying)

NO → Perform mechanical inspection of other drivetrain components.

YES ↓

Replace transmission fluid and filter (remove both pans) and flush cooler lines.
Replace converter assembly and O-ring on turbine shaft.

CHART 14: POSSIBLE CAUSES OF TRANSMISSION NOISE

PERFORM PRELIMINARY INSPECTION FIRST!

CAUTION:

Before checking transmission for what is believed to be transmission noise, ensure presence and positioning of insulating plugs, pads etc. Also make sure that noise does not come from other drivetrain components.

1. WHINE OR BUZZ:
   - Oil level low
   - Plugged or restricted oil filter
   - Damaged oil filter gasket

2. KNOCKING NOISE FROM FRONT OF TRANSMISSION:
   - Loose bolts (Converter to flex plate)
   - Cracked or broken flex plate
   - Converter damaged

3. KNOCKING NOISE WHILE DRIVING - MOSTLY ON ACCELERATION:
   - Transmission mount loose or broken
   - Cooler line mounts loose or broken
   - Cooler lines touching body or frame

4. KNOCKING NOISE WHEN VEHICLE IS STATIONARY:
   - Loose flex plate mounting bolts
   - Cracked or broken flex plate
   - Damaged converter

CHART 15a: POSSIBLE CAUSES OF LOW LINE PRESSURE

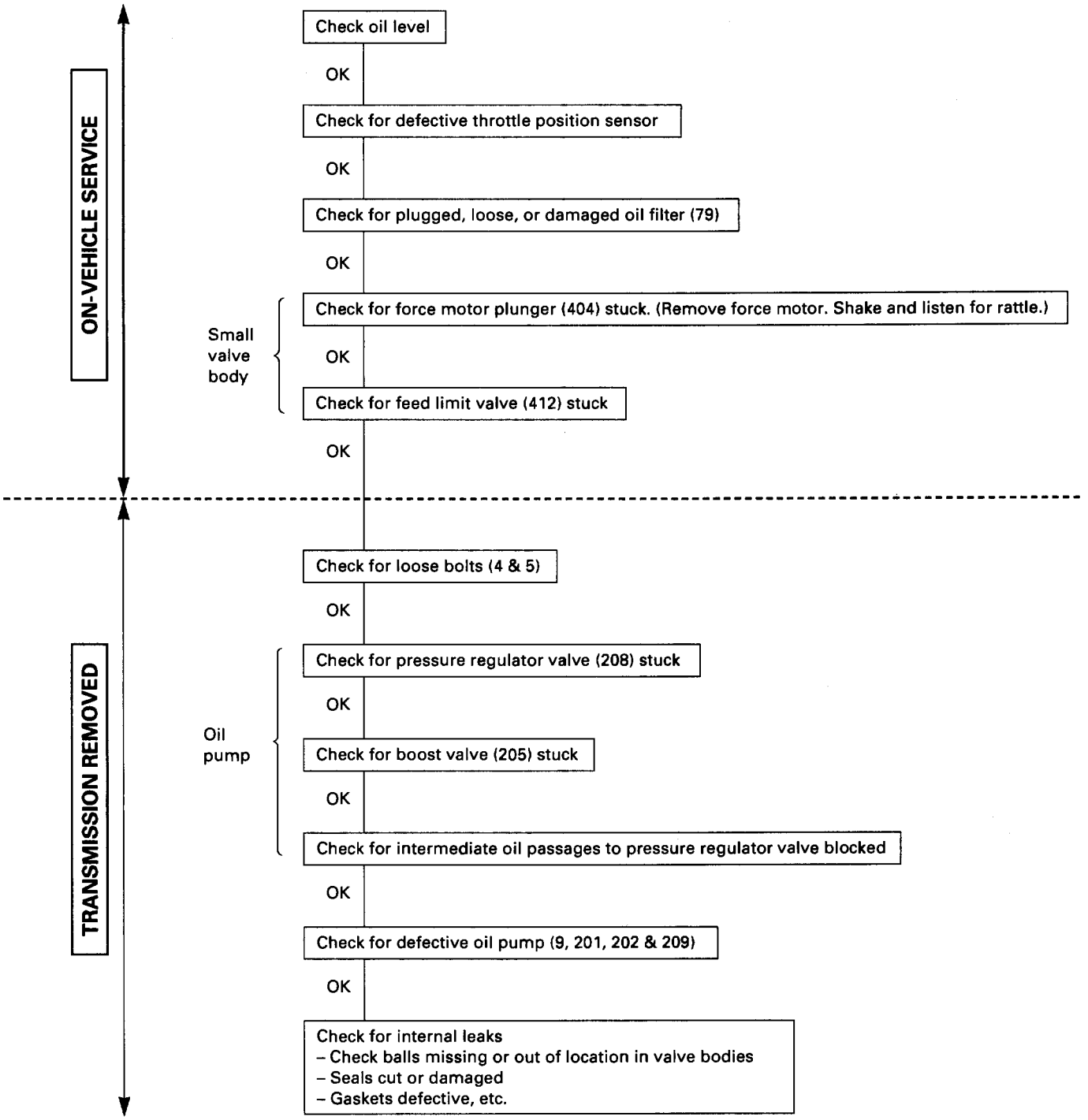

( ) Refer to Parts List at the end of this Section.

CHART 15b: POSSIBLE CAUSES OF HIGH LINE PRESSURE

PERFORM PRELIMINARY INSPECTION FIRST!

NOTE: If transmission is operating in back-up mode, high line pressure will be present.

Also, when TECH1 is connected, line pressure will be at maximum during shifts.

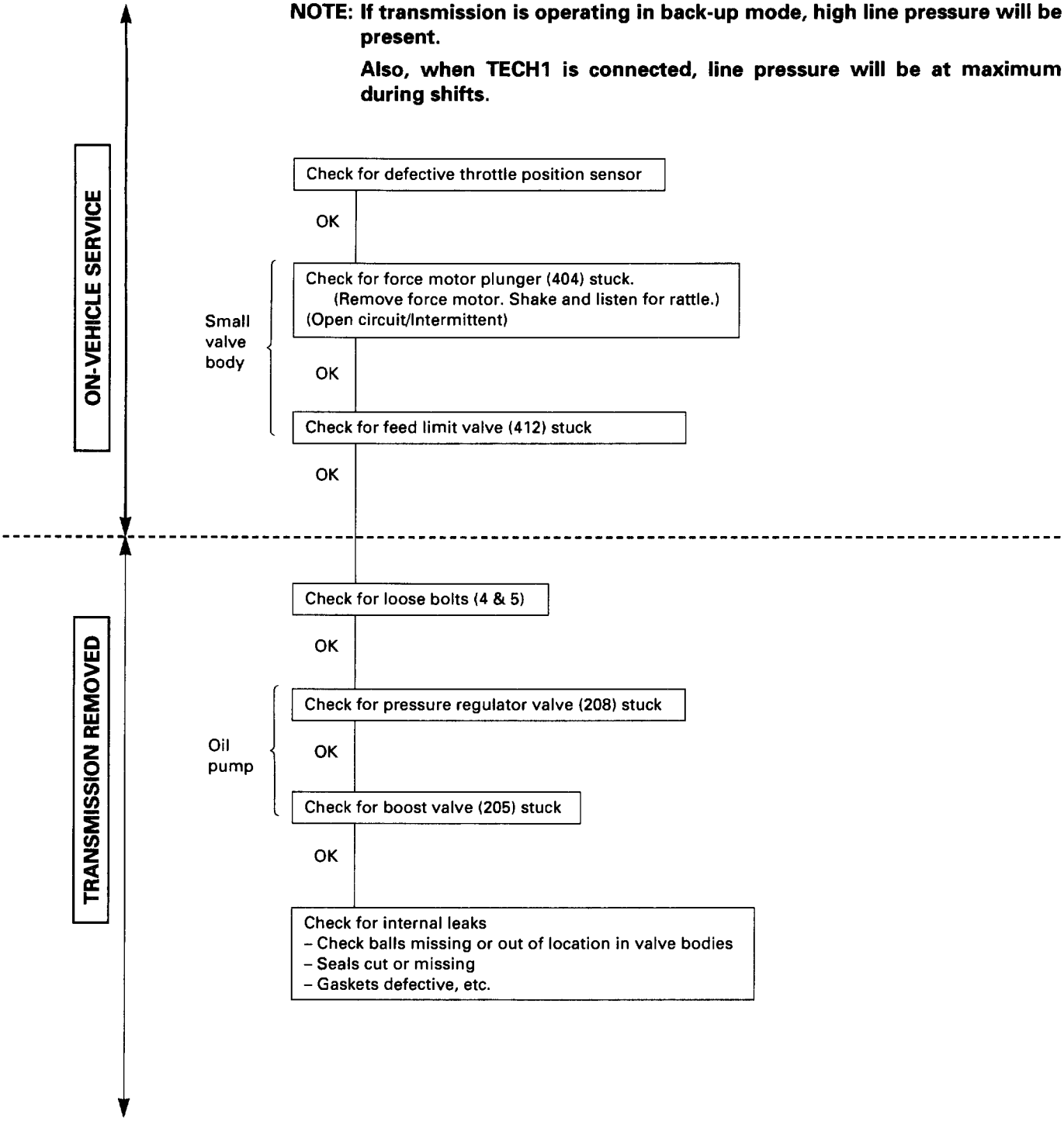

( ) Refer to Parts List at the end of this Section.

CHART 16: POSSIBLE CAUSES OF TRANSMISSION FLUID LEAKS

Before attempting to correct an oil leak, the actual source of the leak must be determined. In many cases, the source of the leak may be difficult to determine due to "wind flow" around the engine and transmission.

The suspected area should be wiped clean of all oil before inspecting for the source of the leak.

Oil leaks around the engine and transmission are generally carried toward the rear of the car by the air stream. For example, a transmission "OIL FILLER TUBE TO CASE" leak will sometimes appear as a leak at the rear of the transmission. In determining the source of an leak, the following two checks should be made:

1. With the engine running, check for external line pressure leaks.
2. With the engine off, check for oil leaks due to the raised oil level caused by drainback of converter oil into the transmission.

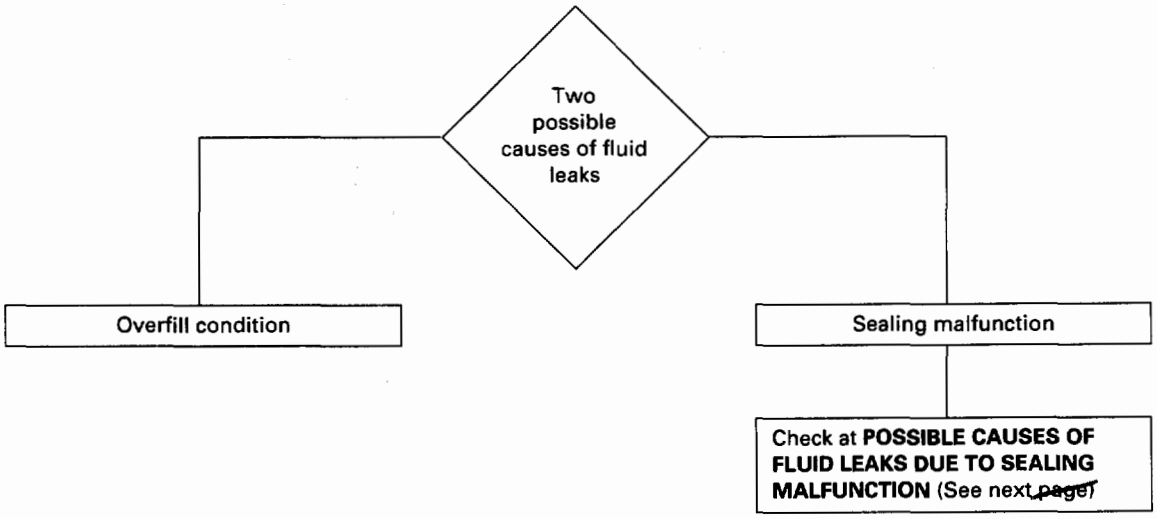

POSSIBLE CAUSES OF FLUID LEAKS DUE TO SEALING MALFUNCTION

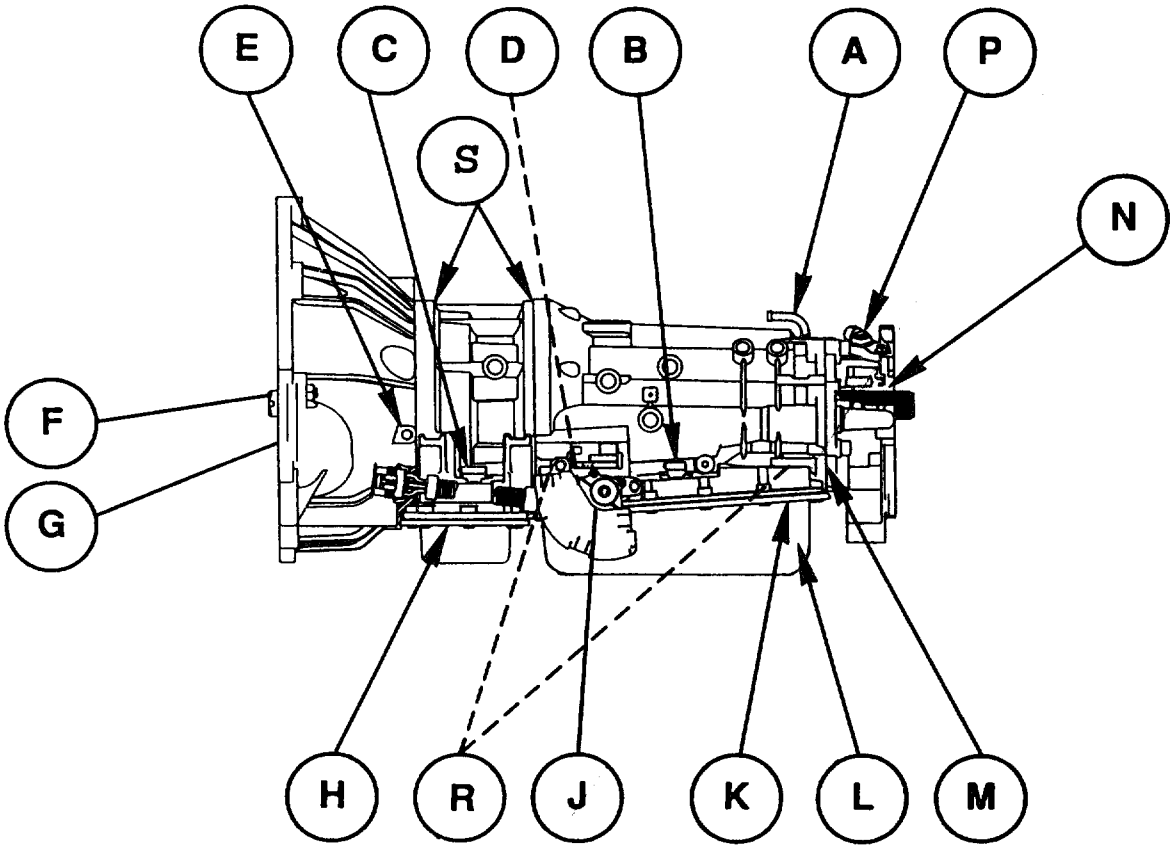

A) Transmission vent (Breather)
B) Electrical connector (Main case) seal
C) Electrical connector (Adapter case) seal
D) Oil filler tube seal/ Tube "LOADING" one side of seal/seal O-ring at tubes junction
E) Line pressure tap plug
F) Converter housing lip seal
G) Converter housing attaching bolts not correctly torqued
H) Oil pan gasket (Adapter case)
J) Selector shaft seal
K) Oil pan gasket (Main case)
L) Oil drain plug gasket
M) Extension (Adapter) to main case gasket
N) Extension (Adapter) lip seal
P) Speed sensor O-ring
R) Oil cooler connectors (2)
S) Adapter case seal rings (2)

STALL TEST

The stall test allows you to check the transmission for internal abrasion and the oneway clutch for slippage. Torque converter performance can also be evaluated. The stall test results together with the road test results will identify transmission components requiring servicing or adjustment.

Stall Test Procedure:

1. Check the level of the engine coolant, the engine oil, and the automatic transmission fluid. Replenish if necessary.
2. Block the wheels and set the parking brake.
3. Connect a tachometer to the engine.
4. Start the engine and allow it to idle until the engine coolant temperature reaches 70 - 80°C (158 - 176°F).
5. Hold the brake pedal down as far as it will go.
6. Place the selector in the "D" range.
7. Gradually push the accelerator pedal to the floor. The throttle valve will be fully open.
   Note the engine speed at which the tachometer needle stabilizes.

Stall Speed	2150 ± 150 rpm (SOHC) 2200 ± 150 rpm (DOHC)

NOTE:
Do not continuously run this test longer than 5 seconds.

8. Release the accelerator pedal.
9. Place the selector in the "N" range.
10. Run the engine at 1,200 rpm for one minute. This will cool the transmission fluid.
11. Repeat Steps 7-10 for the "3", "2", "L" and "R" ranges.

LINE PRESSURE TEST

The line pressure test checks oil pump and control valve pressure regulator valve function. It will also detect oil leakage.

Line Pressure Test Procedure:

1. Check the level of the engine coolant, the engine oil, and the automatic transmission fluid. Replenish if required.
2. Block the wheels and set the parking brake.
3. Remove the pressure detection plug at the left side of the transmission case.
   Set pressure gauge, adapter to the pressure detection plug hole. (Fig. 7A-6a)
   Gauge and adapter: J-29770-A

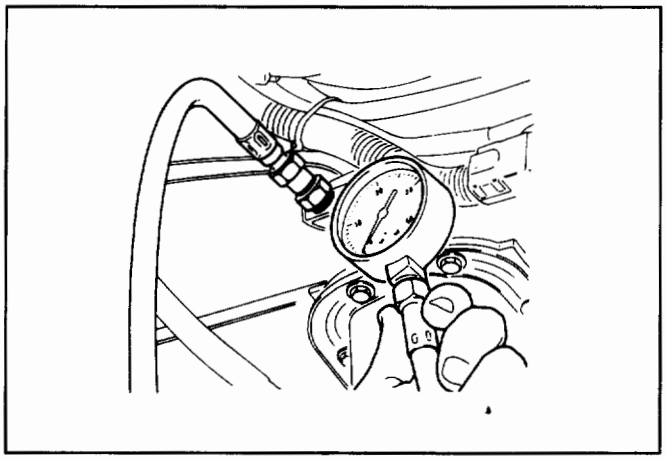

Fig. 7A-6a

4. Start the engine and allow it to idle until the engine coolant temperature reaches 70 – 80°C (158 – 176°F).
5. Hold the brake pedal down as far as it will go.
6. Place the selector in the "D" range.
7. Note the pressure gauge reading with the engine idling.
8. Gradually push the accelerator pedal to the floor. The throttle valve will be fully open.
   Note the pressure gauge reading with the accelerator pedal fully depressed.

NOTE:
Do not continuously run this test longer than 5 seconds.

9. Release the accelerator pedal.
10. Place the selector in the "N" range.
11. Run the engine at 1,200 rpm for one minute. This will cool the transmission fluid.
12. Repeat Steps 7 – 11 for the "3", "2", "L", and "R" ranges.
13. Install a pressure detection plug to the transmission case, applying recommended thread locking agent (LOCTITE 242) or its equivalent to thread of plug. Make sure that thread is cleaned before applying locking agents.
14. Tighten the pressure detection plug to the specified torque.

Torque	N·m(lb·ft)	9–14 (7–10)

MODE	LEVER POSITION	ENGINE SPEED	LINE PRESSURE		FORCE MOTOR CURRENT
			kPa	PSI	
NORMAL/POWER	D, 3, 2, L	IDLE	APPROX. 380	APPROX. 54.6	VARIABLE
WINTER	D	IDLE	320 – 360	46 – 52	0.9 – 1.0A
NORMAL/POWER WINTER	REVERSE	IDLE	470 – 520	68 – 76	0.9 – 1.0A
NORMAL/POWER	D, 3, 2, L	STALL SPEED	1030 – 1110	150 – 161	0.1 – 0.2A
WINTER	D	STALL SPEED	1030 – 1110	150 – 161	0.1 – 0.2A
NORMAL/POWER WINTER	REVERSE	STALL SPEED	1450 – 1570	210 – 227	0.1 – 0.2A

SHIFT SPEED CHART

"Normal mode"

(Transfer gear ratio: High: 1.000 / Rear axle ratio: 4.555)

Upshift

Km/h (mph)

Range	Throttle opening	1 → 2 (First Gear) (Second Gear)	2 → 3 (Second Gear) (Third Gear)	3 → 4 (Third Gear) (Fourth Gear)
D (Drive)	Fully opened	49 ~ 55 (30 ~ 34)	99 ~ 105 (62 ~ 66)	148 ~ 154 (92 ~ 96)
	Half throttle	32 ~ 38 (20 ~ 24)	58 ~ 64 (36 ~ 40)	96 ~ 102 (60 ~ 64)
3 (Third)	Fully opened	49 ~ 55 (30 ~ 34)	99 ~ 105 (62 ~ 66)	—
	Half throttle	32 ~ 38 (20 ~ 24)	58 ~ 64 (36 ~ 40)	—
2 (Second)	Fully opened	49 ~ 55 (30 ~ 34)	—	—
	Half throttle	32 ~ 38 (20 ~ 24)	—	—

Downshift

Km/h (mph)

Range	Throttle opening	1 ← 2 (First Gear) (Second Gear)	2 ← 3 (Second Gear) (Third Gear)	3 ← 4 (Third Gear) (Fourth Gear)
D (Drive)	Fully opened	39 ~ 45 (24 ~ 28)	87 ~ 93 (54 ~ 58)	140 ~ 146 (87 ~ 91)
	Half throttle	15 ~ 21 (9 ~ 13)	34 ~ 40 (21 ~ 25)	67 ~ 73 (42 ~ 46)
	Fully closed	13 ~ 19 (8 ~ 12)	15 ~ 21 (9 ~ 13)	27 ~ 33 (17 ~ 20)
3 (Third)	Fully opened	39 ~ 45 (24 ~ 28)	87 ~ 93 (54 ~ 58)	—
	Half throttle	15 ~ 21 (9 ~ 13)	34 ~ 40 (21 ~ 25)	—
	Fully closed	13 ~ 19 (8 ~ 12)	15 ~ 21 (9 ~ 13)	—
2 (Second)	Fully opened	40 ~ 46 (25 ~ 29)	94 ~ 100 (59 ~ 63)	—
	Half throttle	15 ~ 21 (9 ~ 13)	94 ~ 100 (59 ~ 63)	—
	Fully closed	13 ~ 19 (8 ~ 12)	82 ~ 88 (51 ~ 55)	—
L (First)	—	50 ~ 56 (31 ~ 35)	—	—

"Power mode"

Upshift

Km/h (mph)

Range	Throttle opening	1 → 2 (First Gear) (Second Gear)	2 → 3 (Second Gear) (Third Gear)	3 → 4 (Third Gear) (Fourth Gear)
D (Drive)	Fully opened	49 ~ 55 (30 ~ 34)	99 ~ 105 (62 ~ 66)	169 ~ 175 (105 ~ 109)
	Half throttle	37 ~ 43 (23 ~ 27)	74 ~ 80 (46 ~ 50)	124 ~ 130 (77 ~ 81)
3 (Third)	Fully opened	49 ~ 55 (30 ~ 34)	99 ~ 105 (62 ~ 66)	—
	Half throttle	37 ~ 43 (23 ~ 27)	74 ~ 80 (46 ~ 50)	—
2 (Second)	Fully opened	49 ~ 55 (30 ~ 34)	—	—
	Half throttle	37 ~ 43 (23 ~ 27)	—	—

Downshift

Km/h (mph)

Range	Throttle opening	1 ← 2 (First Gear) (Second Gear)	2 ← 3 (Second Gear) (Third Gear)	3 ← 4 (Third Gear) (Fourth Gear)
D (Drive)	Fully opened	40 ~ 46 (25 ~ 29)	90 ~ 96 (56 ~ 60)	160 ~ 166 (100 ~ 104)
	Half throttle	21 ~ 27 (13 ~ 17)	53 ~ 59 (33 ~ 37)	98 ~ 104 (61 ~ 65)
	Fully closed	13 ~ 19 (8 ~ 12)	24 ~ 30 (15 ~ 19)	46 ~ 52 (29 ~ 32)
3 (Third)	Fully opened	40 ~ 46 (25 ~ 29)	90 ~ 96 (56 ~ 60)	—
	Half throttle	21 ~ 27 (13 ~ 17)	53 ~ 59 (33 ~ 37)	—
	Fully closed	13 ~ 19 (8 ~ 12)	24 ~ 30 (15 ~ 19)	—
2 (Second)	Fully opened	40 ~ 46 (25 ~ 29)	94 ~ 100 (59 ~ 63)	—
	Half throttle	21 ~ 27 (13 ~ 17)	94 ~ 100 (59 ~ 63)	—
	Fully closed	13 ~ 19 (8 ~ 12)	82 ~ 88 (51 ~ 55)	—
L (First)	—	50 ~ 56 (31 ~ 35)	—	—

"Winter mode"

Km/h (mph)

D range, winter mode ON → OFF	31 ~ 37 (19 ~ 23)

LOCK-UP SPEED CHART

(Transfer gear ratio: High: 1.000 / Rear axle ratio: 4.555)

Km/h (mph)

	Mode	Lock-Up ON			Lock-Up OFF		
		2nd	3rd	4th	2nd	3rd	4th
D range Throttle opening 9%	Normal	72 ~ 78 (45 ~ 48)	53 ~ 59 (33 ~ 37)	63 ~ 69 (39 ~ 43)	67 ~ 73 (42 ~ 45)	45 ~ 51 (28 ~ 32)	58 ~64 (36 ~ 40)
	Power	72 ~ 78 (45 ~ 49)	77 ~ 83 (48 ~ 52)	77 ~ 83 (48 ~ 52)	67 ~ 73 (42 ~ 45)	68 ~ 74 (42 ~ 46)	72 ~ 78 (45 ~ 48)

ELECTRONIC DIAGNOSIS

HOW TO DIAGNOSE THE PROBLEM

1. To avoid incorrect diagnostics: this book needs to be followed accurately. Unless stated: **do not jump directly to a section that could contain the solution: some important information may be missed.**
2. The sections in CAPITALS and bold are the main sections that can be found in the contents.
3. The GOTO **"SECTION"** means to continue to check going to the "section".
4. The GOTHROUGH **"SECTION"** means to go through the "section" and then to go back to the place the GOTHROUGH was written.
5. BASIC ELECTRIC CIRCUITS:
   You should understand the basic theory of electricity. This will include the meaning of voltage, amps, ohms, and what happens in a circuit with an open or shorted wire. You should also be able to read and understand wiring diagrams.
6. IGNITION CYCLE:
   When the car is driven a malfunction can occur due to a car wiring harness problem, in this case the driver can reset the system (as on a personal computer). To reset the computer he must:
   (1) Stop the car and the engine.
   (2) Turn the key ignition OFF.
   (3) Turn the key ignition ON.

CHECK TRANS INDICATOR

Find CHECK TRANS indicator and verify if it is (Fig. 7A-7):

A. Flashing: GOTO **DIAGNOSTIC CHECK.**

B. Staying on: GOTHROUGH **CHECK TRANS CHECK.**

C. Is never ON when the ignition key is turned on: GOTHROUGH **CHECK TRANS CHECK**

D. Is ON during 2 to 3 seconds at ignition but OFF after: Normal operation. No DTC or malfunction.

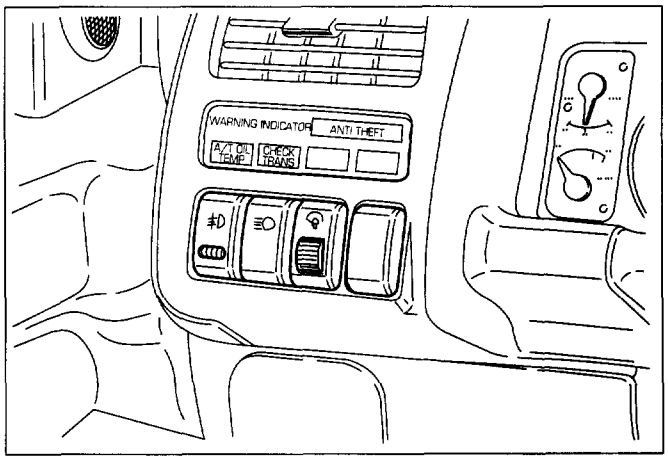

Fig. 7A-7

DIAGNOSTIC CHECK

This test determines if the transmission itself or its inputs or outputs connections or sensors are failing.

IF you have a scan tool TECH1:

NO: Use the CHECK TRANS Indicator diagnostic codes GOTO **FLASHING CODES**.

YES:

1. Connect the TECH1: GOTHROUGH **TECH1 CONNECTION**.
2. Turn on the ignition but not the engine.
3. Push "F2" on TECH1 to see the Diagnostic Trouble Code (DTC):
4. IF you have DTC?
   YES: write down all code numbers and do the **DTC CHECK**
   NO: the DTC can not help you finding the problem.
   (1) GOTHROUGH **"CHECK TRANS" CHECK**
   (2) IF it is flashing and the flash is 0.2 seconds ON and 0.2 seconds OFF (Fig. 7A-8), this means that you should have a DTC stored. Please recheck GOTO **DIAGNOSTIC CHECK** and if you find the same problem GOTO **TCM MEM-CAL REPLACEMENT**.
   (3) IF the CHECK TRANS indicator is not flashing GOTO **WITHOUT DTC SET**.

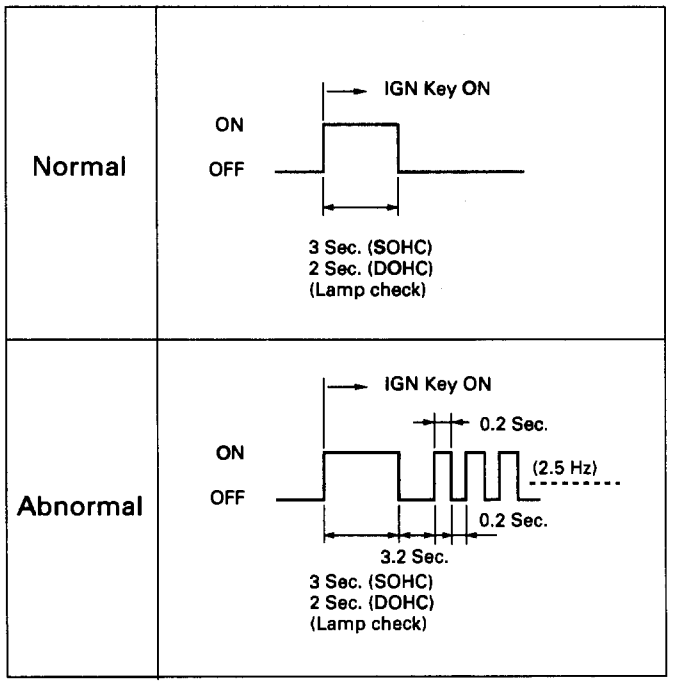

Fig. 7A-8

"CHECK TRANS" CHECK

1. **CASE** it is ON during 2 to 3 seconds at ignition (or when the engine is cranked) but it is OFF after (Fig. 7A-8a). The indicator is working normally GOTO **DIAGNOSTIC CHECK**.
2. **CASE** it is flashing and the flash is 0.2 seconds ON and 0.2 seconds OFF always when ignition is on (engine cranked or not). This means that there is a malfunction. GOTO **DIAGNOSTIC CHECK**.

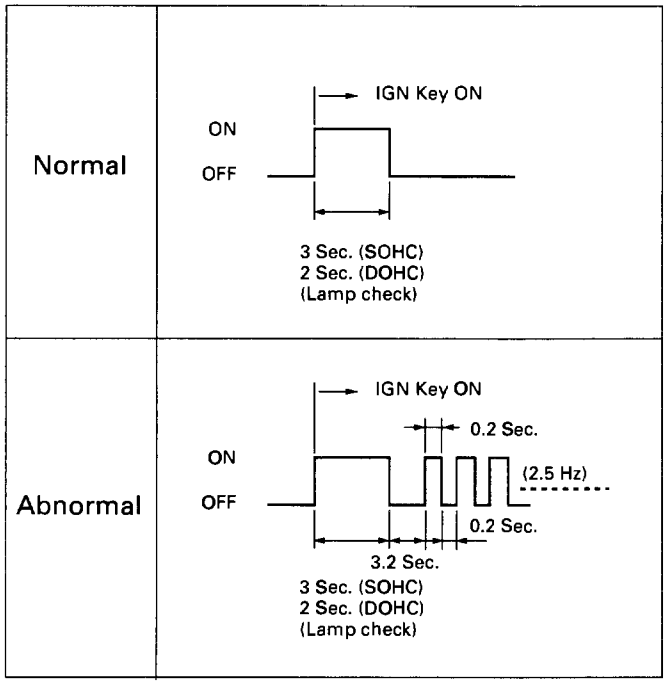

Fig. 7A-8a

3. **CASE** the CHECK TRANS indicator is flashing always and the flash is 0.4 seconds ON and 0.4 second OFF.
   (1) This means that the Transmission Control Module (TCM) is in flashing code mode. This mode is only used for service. This mode is set when the Terminal 1 of diagnostic connector C-92 is set to ground. To go out of this mode see Fig. 7A-8b.
   (2) Check if terminal 1 of diagnostic connector C-92 is shorted to ground. (Voltage is about 0 volts when there is a short to ground instead of 5 volts).
   (3) Check if TCM terminal D16 has the same problem.
   (4) Remove the short circuit to ground due to wiring problems.
   (5) IF problem solved: GOTO **CHECK TRANS INDICATOR**.
   NO: GOTO **TCM MEM-CAL REPLACEMENT**.

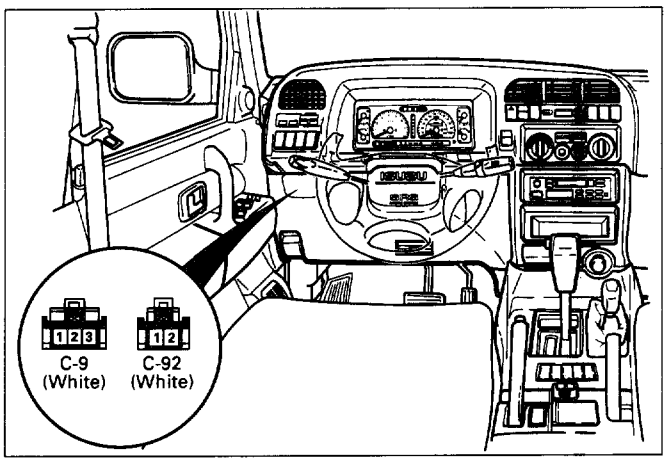

Fig. 7A-8b

4. **CASE** it is staying ON always when Ignition is ON.
   (1) This means that connection between the Lamp and the TCM is shorted to ground (Fig. 7A-8c).
   (2) Verify if instrument panel terminal 7 of connector I-1 is shorted to ground.
   (3) Verify if the TCM connector C-91 terminal C10 is shorted to ground.
   (4) Verify that the instrument panel terminal 6 of connector I-1 is connected to Battery.
   (5) IF problem solved: GOTO **CHECK TRANS INDICATOR**.
   NO: GOTO **TCM MEM-CAL REPLACEMENT**.
5. **CASE** it is staying OFF with the ignition ON (engine OFF).
   (1) This means that connection between the Lamp and the TCM is shorted to battery or opened (Fig. 7A-8c).
   (2) Verify if instrument panel terminal 7 of connector I-1 is shorted to battery or open.
   (3) Verify if the TCM connector C-91 terminal C10 is shorted to battery or open.
   (4) Verify that the instrument panel terminal 6 of connector I-1 is connected to Battery. If not check the Fuses and the connections (terminal 10 of connector H-25) voltage.
   (5) IF problem solved: GOTO **CHECK TRANS INDICATOR**.
   NO: GOTO **TCM MEM-CAL REPLACEMENT**.

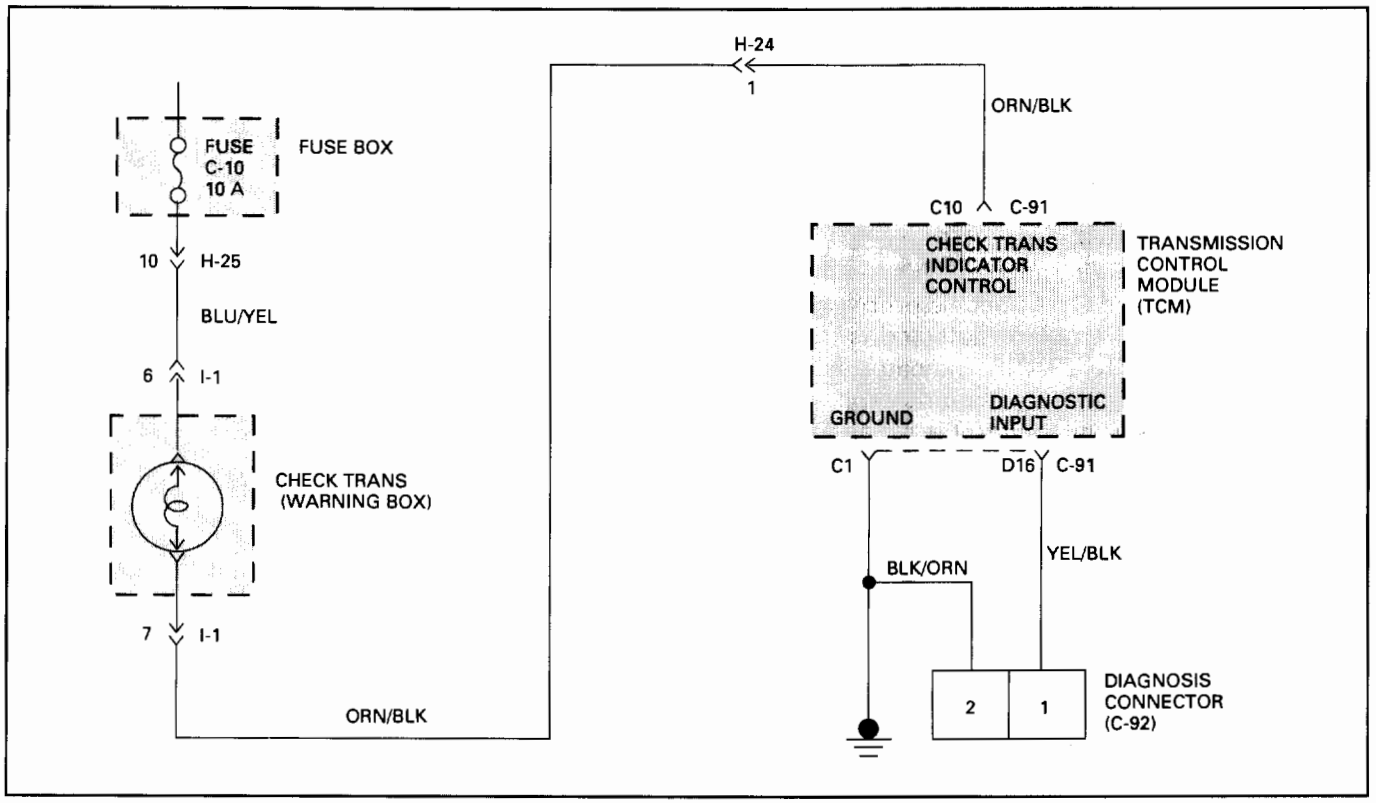
H-24
1
ORN/BLK
FUSE
C-10
10 A
FUSE BOX
10
H-25
BLU/YEL
6
I-1
CHECK TRANS
(WARNING BOX)
7
I-1
ORN/BLK
C10
C-91
CHECK TRANS
INDICATOR
CONTROL
TRANSMISSION
CONTROL
MODULE
(TCM)
GROUND
DIAGNOSTIC
INPUT
C1
D16
C-91
YEL/BLK
BLK/ORN
2
1
DIAGNOSIS
CONNECTOR
(C-92)

Fig. 7A-8c

FLASHING CODES

1. ON BOARD DIAGNOSIS (SELF-DIAGNOSIS)
   (1) The Transmission Control Module (TCM) conducts a self-test of most of the wiring and components in the system each time the key is turned ON. If a fault is detected the TCM will store a Diagnostic Trouble Code (DTC) in memory. It's a number that corresponds to a specific problem.
   (2) When the problem detected is important: the CHECK TRANS indicator is flashing (turned ON 0.2 seconds and OFF 0.2 seconds) until the fault is repaired and the TCM memory is cleared (Fig. 7A-8d).

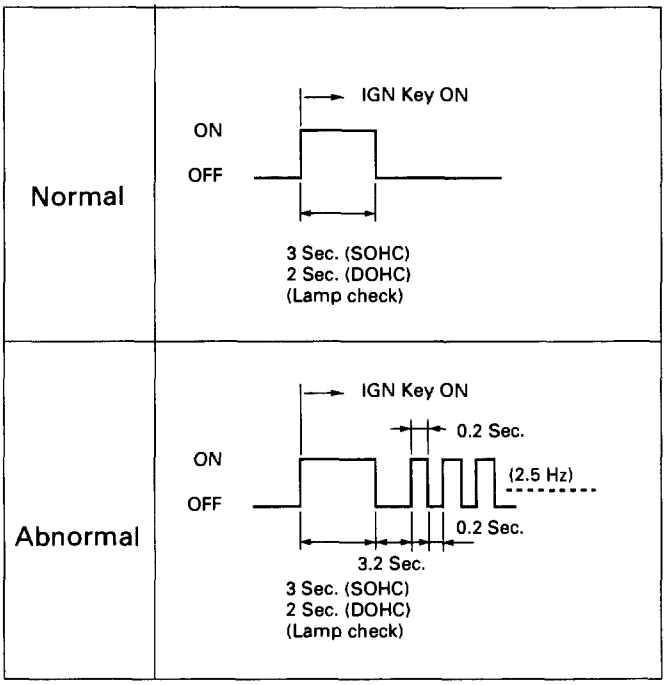

Fig. 7A-8d

2. DIAGNOSTIC TROUBLE CODES (DTC)
   (1) DTC can be displayed by the Transmission Control Module (TCM) by shorting together terminals 1 and 2 of the TCM Diagnosis Connector (C-92) located left side of instrument panel (Fig. 7A-8e) (This grounds the TCM pin D16).

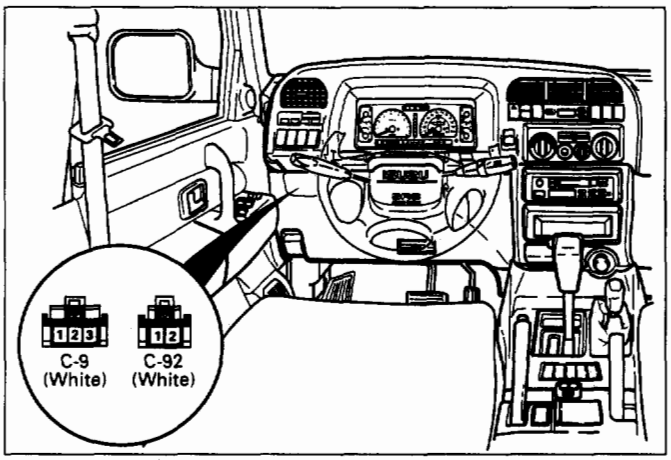

Fig. 7A-8e

   (2) After this, the CHECK TRANS Indicator will be OFF for 3.2 second and then will flash each DTC 3 times (Fig. 7A-8f).
      ① When there are more than 9 flashes this means that the indicator is constantly flashing, OFF for 0.4 seconds, ON for 0.4 seconds. In this case there is no DTC stored in memory.
         - To find the problem without a scan tool and without DTC GOTO **WITHOUT DTC SET**.
      ② When there are less than 9 flashes you will see DTC of 2 digits repeated 3 times each and when all codes have been displayed they are displayed again beginning from the first one.
      ③ Do not care about the DTC order : if "21" is before "22" it does not matter.
      ④ Write down all codes numbers and GOTO **DTC CHECK**.
   (3) IF CHECK TRANS indicator is not flashing GOTO **"CHECK TRANS" CHECK**.

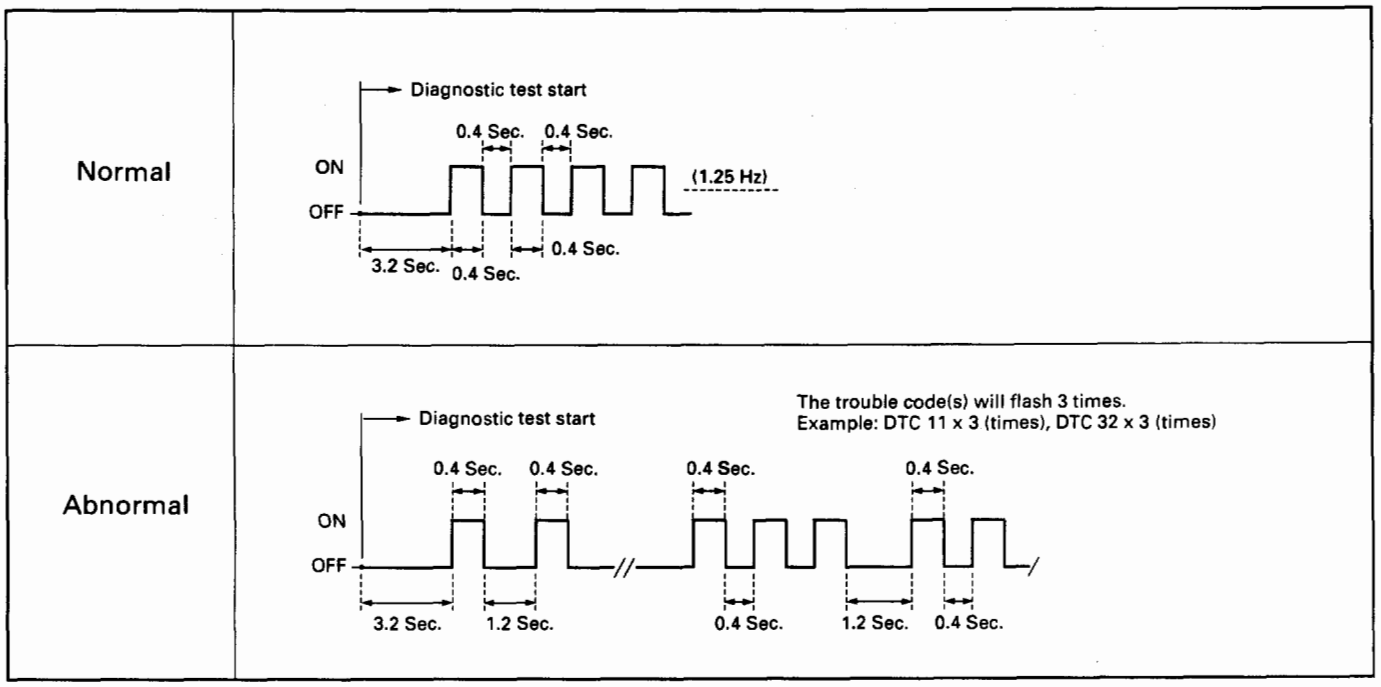

Fig. 7A-8f

TECH1 CONNECTION

1. The Electronic Diagnosis Equipment is composed of:
   (1) TECH1 (J-38770-1) hand-held scan tool (Fig. 7A-9).
   (2) TECH1 self-test adapter.
   (3) Manufacturer's operating instructions.

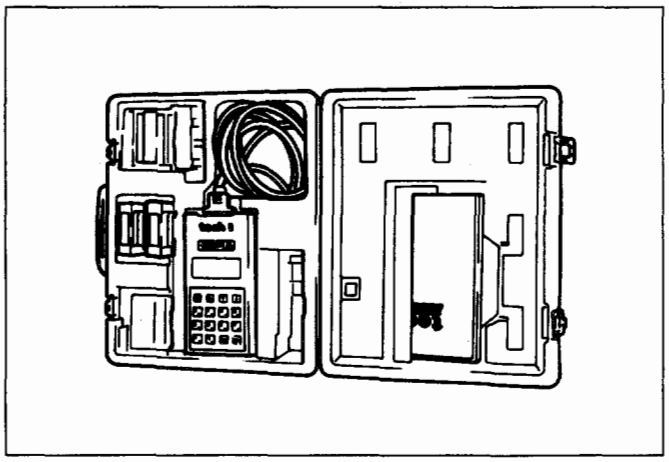

Fig. 7A-9

2. Battery Cable Adapter
   (1) This harness (J-38770-4) allows you to power the TECH1 from vehicle battery.
   (2) Remark: Isuzu vehicles do not have power to the cigarette lighter during cranking.

3. Transmission Cartridge
   The cartridge (TK02500B-1) must be inserted into the TECH1 for the 4L30-E transmission diagnosis (Fig. 7A-9a).

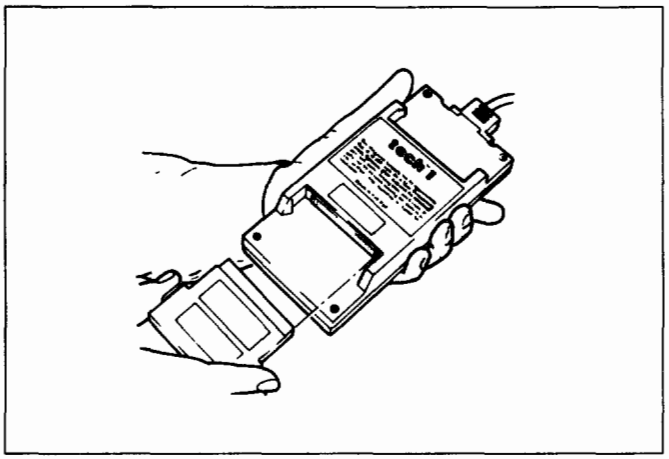

Fig. 7A-9a

4. TECH 1 Adapter
   The adapter (TA-02279-B) connects the single TECH1 vehicle connector to single common diagnostic connector for the 4L30-E Transmission Control Module (TCM) and the Engine Control Module (ECM) called DATA LINK CONNECTOR (C-9) (white) (Fig. 7A-9b).

5. Connecting the TECH1
   (1) Always observe the instructions in the TECH1 and Transmission Cartridge Operator's Manual.
   (2) Make sure the vehicle ignition is off.
   (3) Install the adapter cable between the TECH1 vehicle connector and the TCM/ECM DATA LINK CONNECTOR (C-9).
   (4) Connect the battery cable adapter to the vehicle battery and plug the TECH1 into its "cigarette lighter" receptacle.

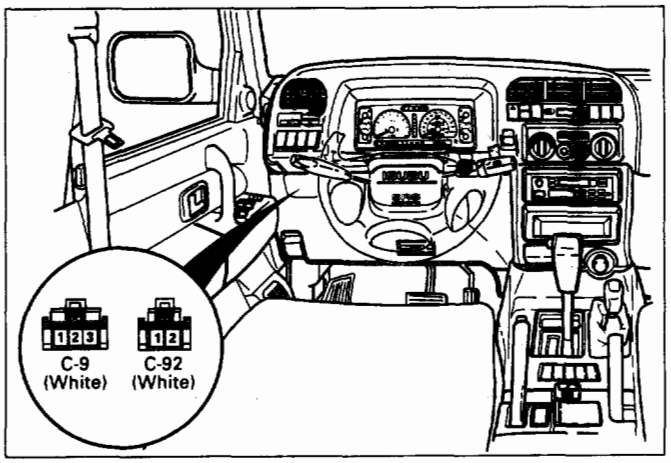

Fig. 7A-9b

6. DVOM
   When instructed to use a voltmeter or ohmmeter within a troubleshooting procedure, use only a high-impedance DVOM (Digital Volt Ohm Meter) such as J-39200 or equivalent.

TECH1 OPERATING FLOW CHART

TECH1 START

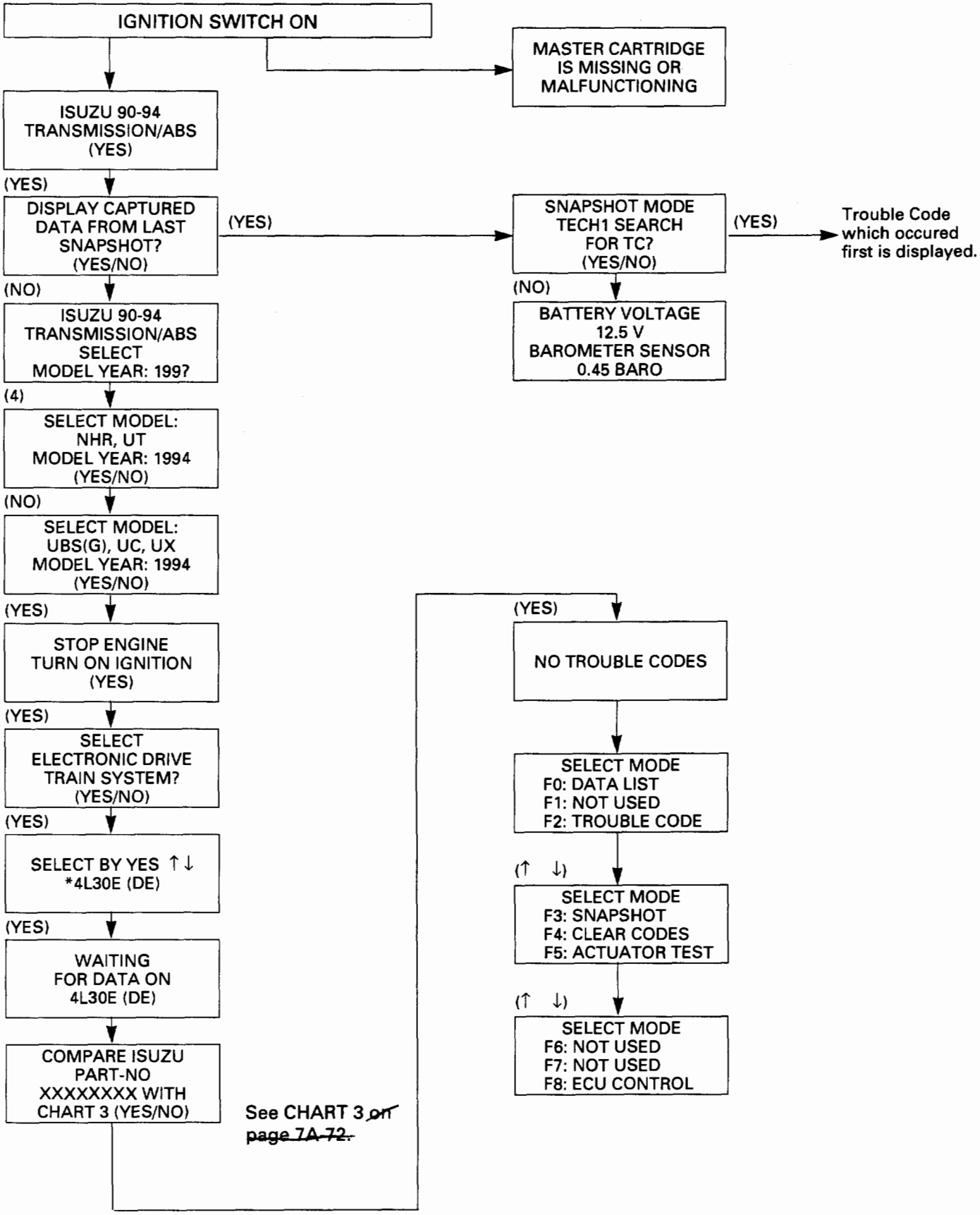

F0:DATA LIST

The purpose of the F0: DATA LIST mode is to continuously monitor data parameters.
The current actual values of all important sensors and signals in the system are displayed through Mode F0. The displayed actual values must then be compared with the specifications listed in the Checking instructions. From these the trouble can be clearly diagnosed. In the Quick Check list, all the test steps are summarized, so that (for example), after a mechanical/hydraulic problem, the electronic functions can also be quickly checked.

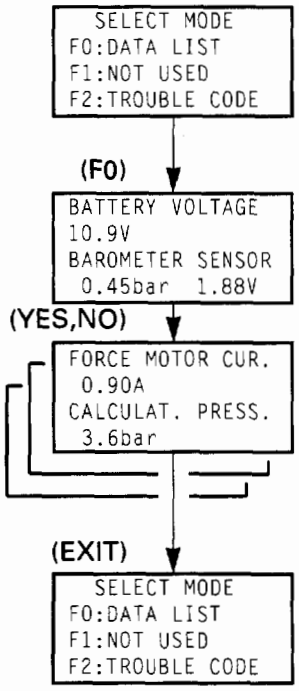

NOTE: ACTIVE TECH 1 KEYS

YES & NO	Scroll through displayed data parameters.
F0	Mark the top display parameter as 'fixed' for creating your own pairs.
F1	Mark the bottom display parameter as 'fixed' for creating your own pairs.
F7	Change the display between MPH and KPH.
EXIT	Return to SELECT MODE menu.

F2:TROUBLE CODE

The purpose of the F2:TROUBLE CODE mode is to display stored Transmission Control Module (TCM) trouble codes.

Selecting F2:TROUBLE CODE mode will cause the TECH 1 to display the trouble codes stored by the TCM.

The status of the trouble code is displayed:

- PRESENT: Fault conditions present now.
- NOT PRESENT: Indicates a "History" trouble code: a code that was set but is no longer present.

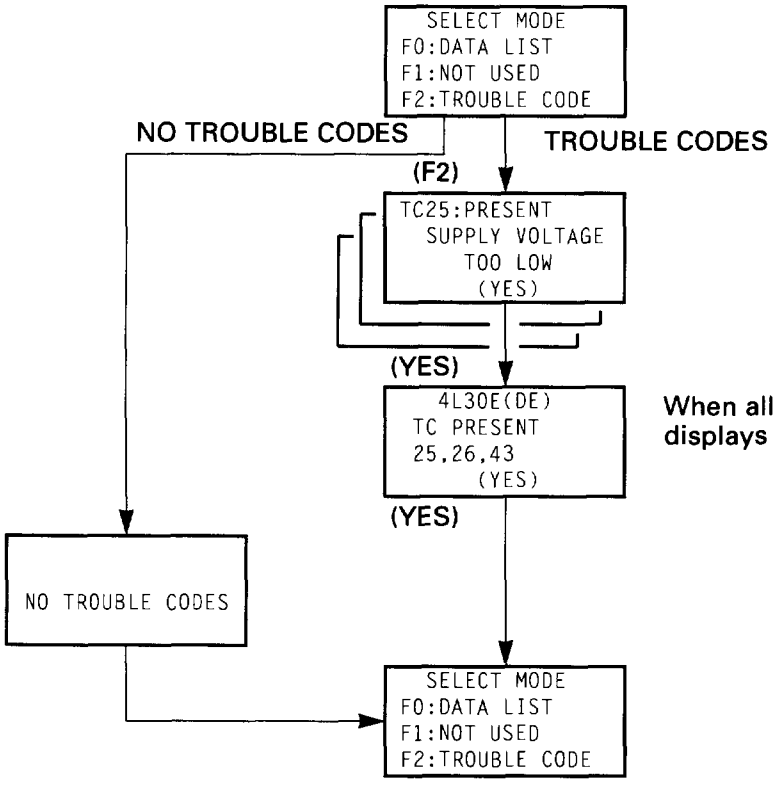

When all trouble codes have been displayed, TECH 1 displays a summary of the trouble codes.

F3:SNAPSHOT

The F3:SNAPSHOT mode provides you with a tool which you can use to help diagnose an intermittent or transient problem. In this mode, you can specify a trigger condition, and TCM data is automatically stored both before and after the trigger occurrence. You can then select any of the stored data for display.

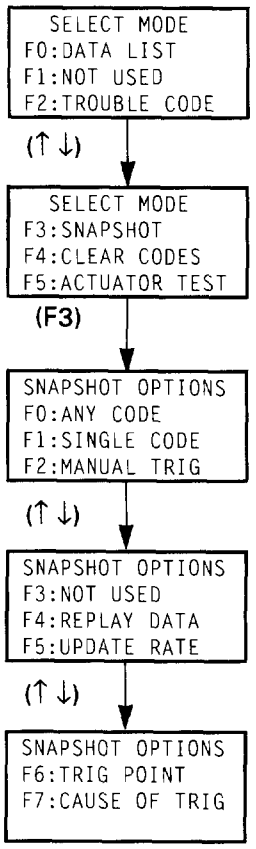

(A) F0: ANY TC (CAPTURE DATA ON ANY TC)

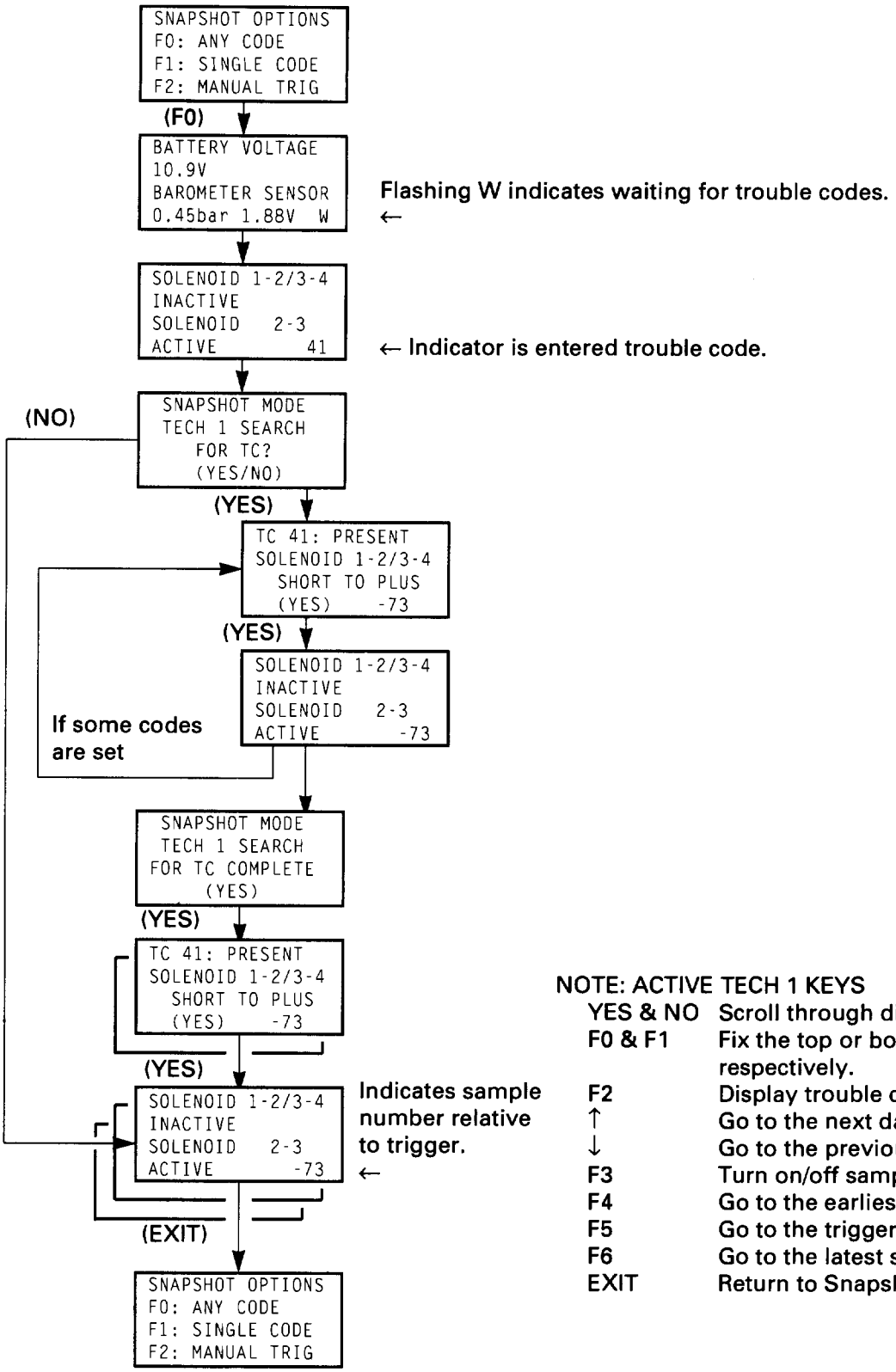

NOTE: ACTIVE TECH 1 KEYS

YES & NO	Scroll through displayed data parameters.
F0 & F1	Fix the top or bottom display parameter respectively.
F2	Display trouble codes for current sample.
↑	Go to the next data sample.
↓	Go to the previous data sample.
F3	Turn on/off sample time display.
F4	Go to the earliest sample in memory.
F5	Go to the trigger sample (sample 0).
F6	Go to the latest sample in memory.
EXIT	Return to Snapshot Options menu.

(B) F1: SINGLE CODE (CAPTURE DATA ON TC STORED)

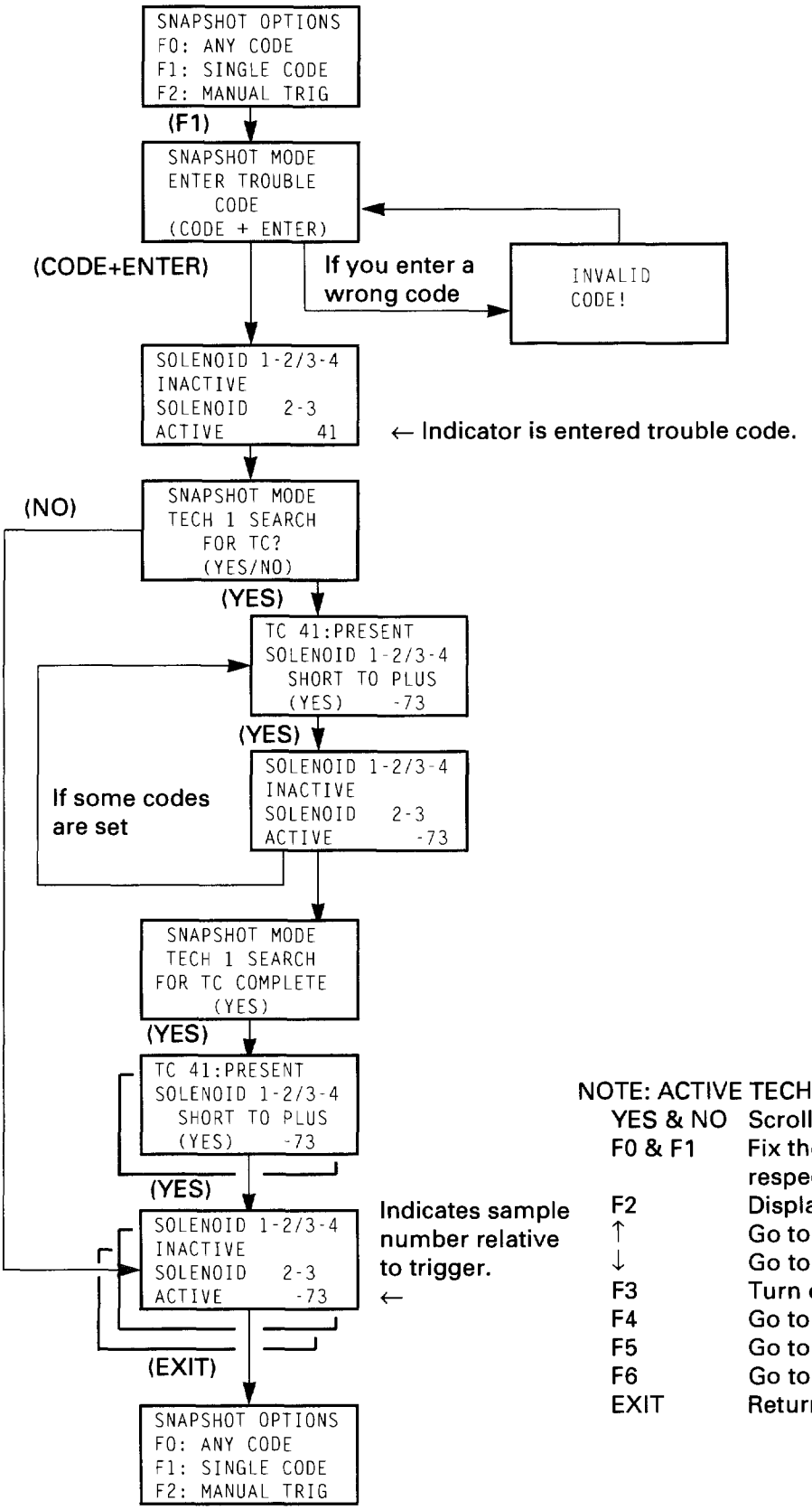

NOTE: ACTIVE TECH 1 KEYS

YES & NO	Scroll through displayed data parameters.
F0 & F1	Fix the top or bottom display parameter respectively.
F2	Display trouble codes for current sample.
↑	Go to the next data sample.
↓	Go to the previous data sample.
F3	Turn on/off sample time display.
F4	Go to the earliest sample in memory.
F5	Go to the trigger sample (sample 0).
F6	Go to the latest sample in memory.
EXIT	Return to Snapshot Options menu.

(C) F2: MANUAL TRIG (CAPTURE DATA ON F9 KEY PRESS)

This option is always available, whether or not trouble codes are present.

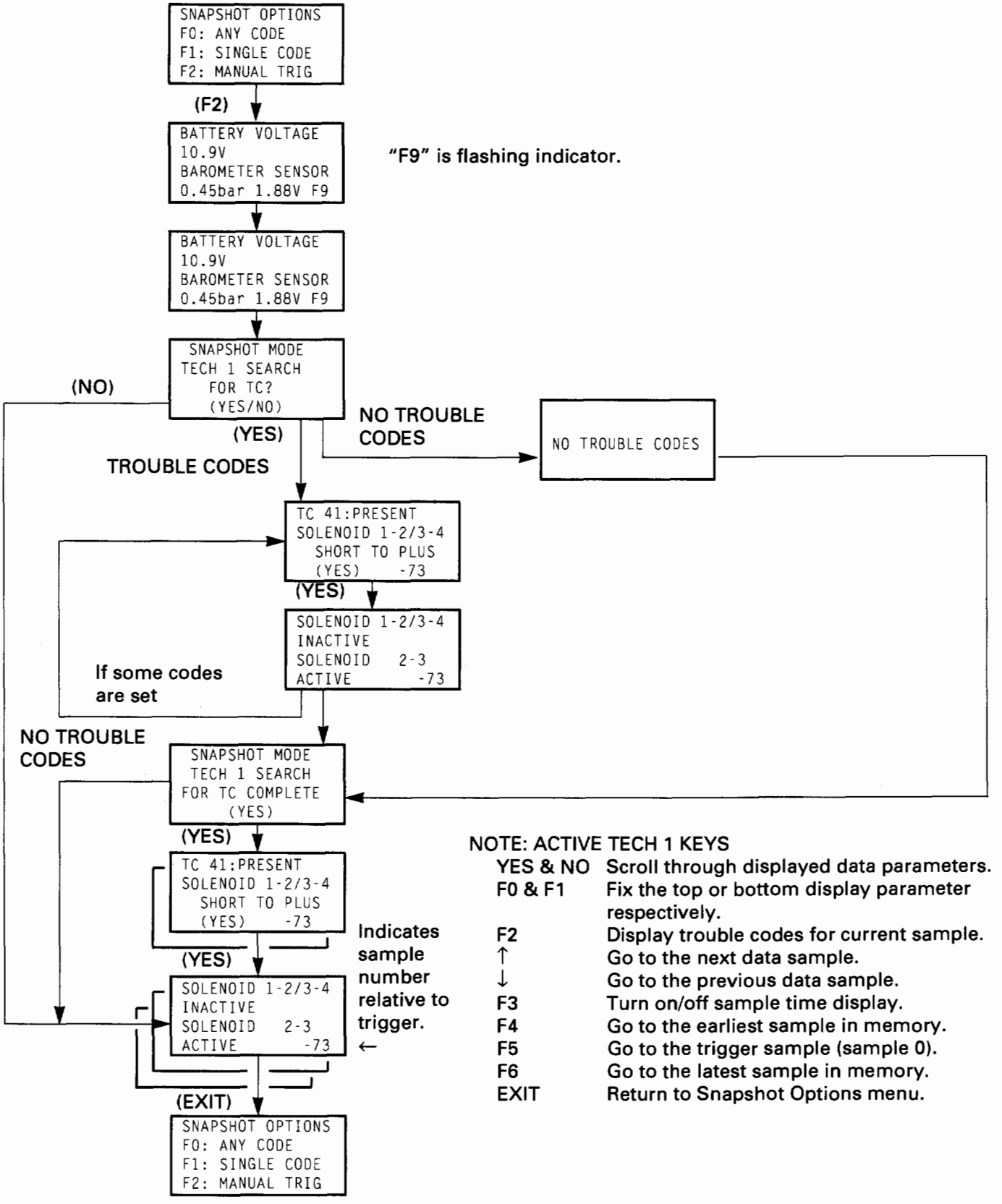

NOTE: ACTIVE TECH 1 KEYS

YES & NO	Scroll through displayed data parameters.
F0 & F1	Fix the top or bottom display parameter respectively.
F2	Display trouble codes for current sample.
↑	Go to the next data sample.
↓	Go to the previous data sample.
F3	Turn on/off sample time display.
F4	Go to the earliest sample in memory.
F5	Go to the trigger sample (sample 0).
F6	Go to the latest sample in memory.
EXIT	Return to Snapshot Options menu.

(D) F4: REPLAY DATA (SEARCH FOR TROUBLE CODE REPLAY DATA)

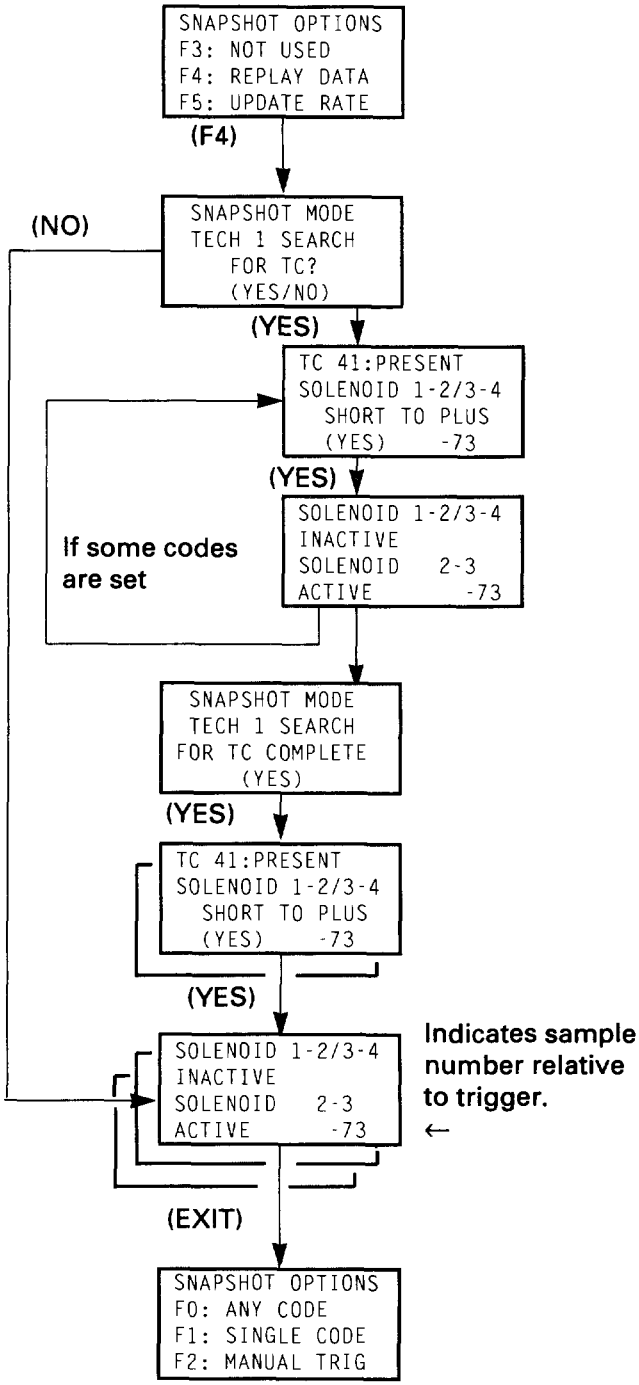

NOTE: ACTIVE TECH 1 KEYS

YES & NO	Scroll through displayed data parameters.
F0 & F1	Fix the top or bottom display parameter respectively.
F2	Display trouble codes for current sample.
↑	Go to the next data sample.
↓	Go to the previous data sample.
F3	Turn on/off sample time display.
F4	Go to the earliest sample in memory.
F5	Go to the trigger sample (sample 0).
F6	Go to the latest sample in memory.
EXIT	Return to Snapshot Options menu.

(E) F5: UPDATE RATE

The purpose of the F5: UPDATE RATE option is to change the sampling period of snapshot.

```
SNAPSHOT OPTIONS
F3: NOT USED
F4: REPLAY DATA
F5: UPDATE RATE
```

(F5)

```
SNAP UP DATE RATE
F0: FAST (EACH)
F1: SLOW (1/SEC)
```

(Select F0 or F1 key)

(F) F6: TRIG POINT

The purpose of the F6: TRIG POINT option is to fix the trigger point of snapshot.

```
SNAPSHOT OPTIONS
F6: TRIG POINT
F7: CAUSE OF TRIG
```

(F6)

```
TRIGGER POINT AT
F0: BEGINNING
F1: CENTER
F2: END OF DATA
```

(Select F0 ~ F2 key)

(G) F7: CAUSE OF TRIG

The purpose of the F7: CAUSE OF TRIG option is to fix the trigger point by pressing "F9" key.

```
SNAPSHOT OPTIONS
F6: TRIG POINT
F7: CAUSE OF TRIG
```

(F7)

```
TRIGGER CAUSED
      BY
*F9* KEY PRESS
    (EXIT)
```

F4: CLEAR CODES

The purpose of the F4: CLEAR CODES mode is to command the clearing of stored Transmission Control Module (TCM) trouble codes.

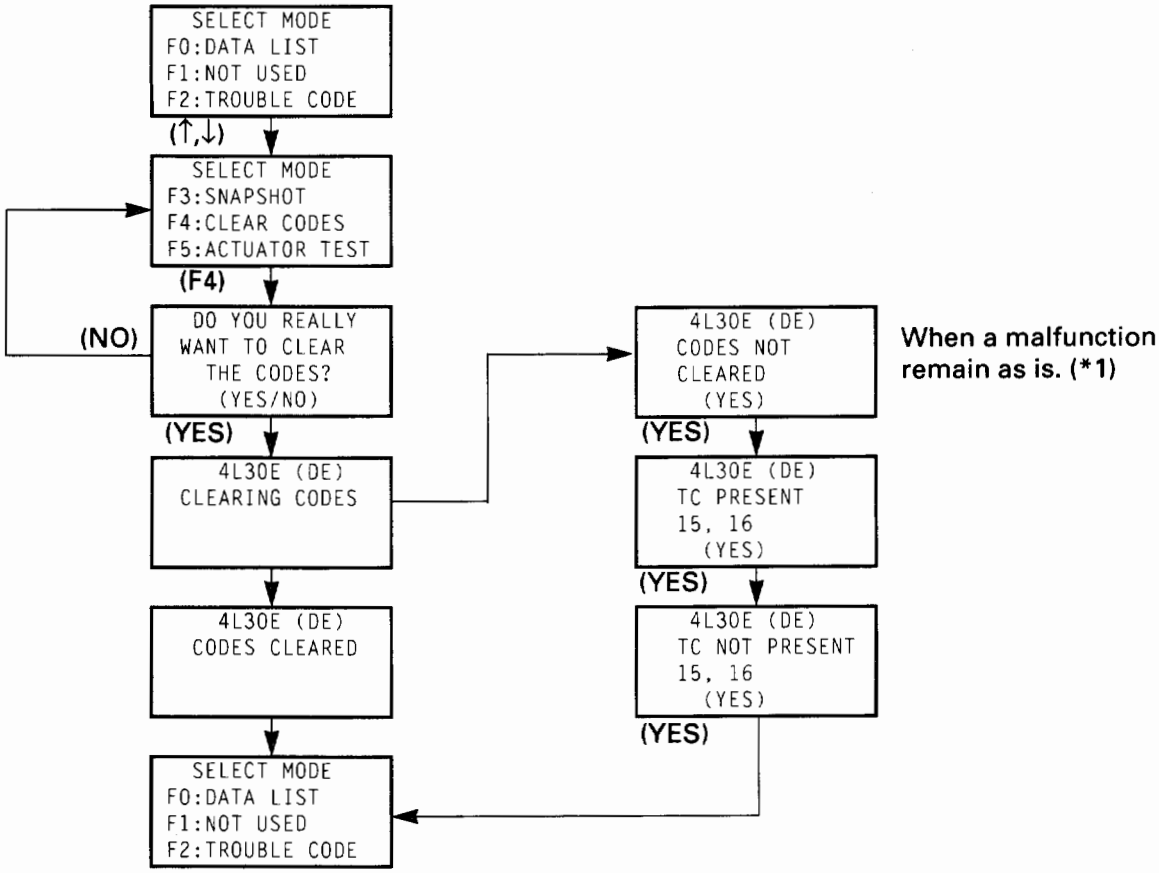

After clearing codes, confirm system operation by test driving the vehicle. Allow the vehicle to shift through all four forward gears in a manner which attempts to repeat the failure condition.

*1: When the trouble has not been repaired and the trouble code cannot be erased, check the vehicle again.

F5: ACTUATOR TEST

The purpose of F5: ACTUATOR TEST mode is to check for correct operation of electronic system actuators. By means of the TECH 1 you can command the actuators ON and OFF. Then you can check the actuators for correct operation. Select the actuator by pushing the "↑" or "↓" key. (The * mark moves.)

For some actuator tests the TECH 1 can automatically determine the correct function of the actuators.

CAUTION

Always put the parking brake on and block the wheels when using this test mode.

The engine should be OFF and the ignition is ON. Refer to page 7A-73.

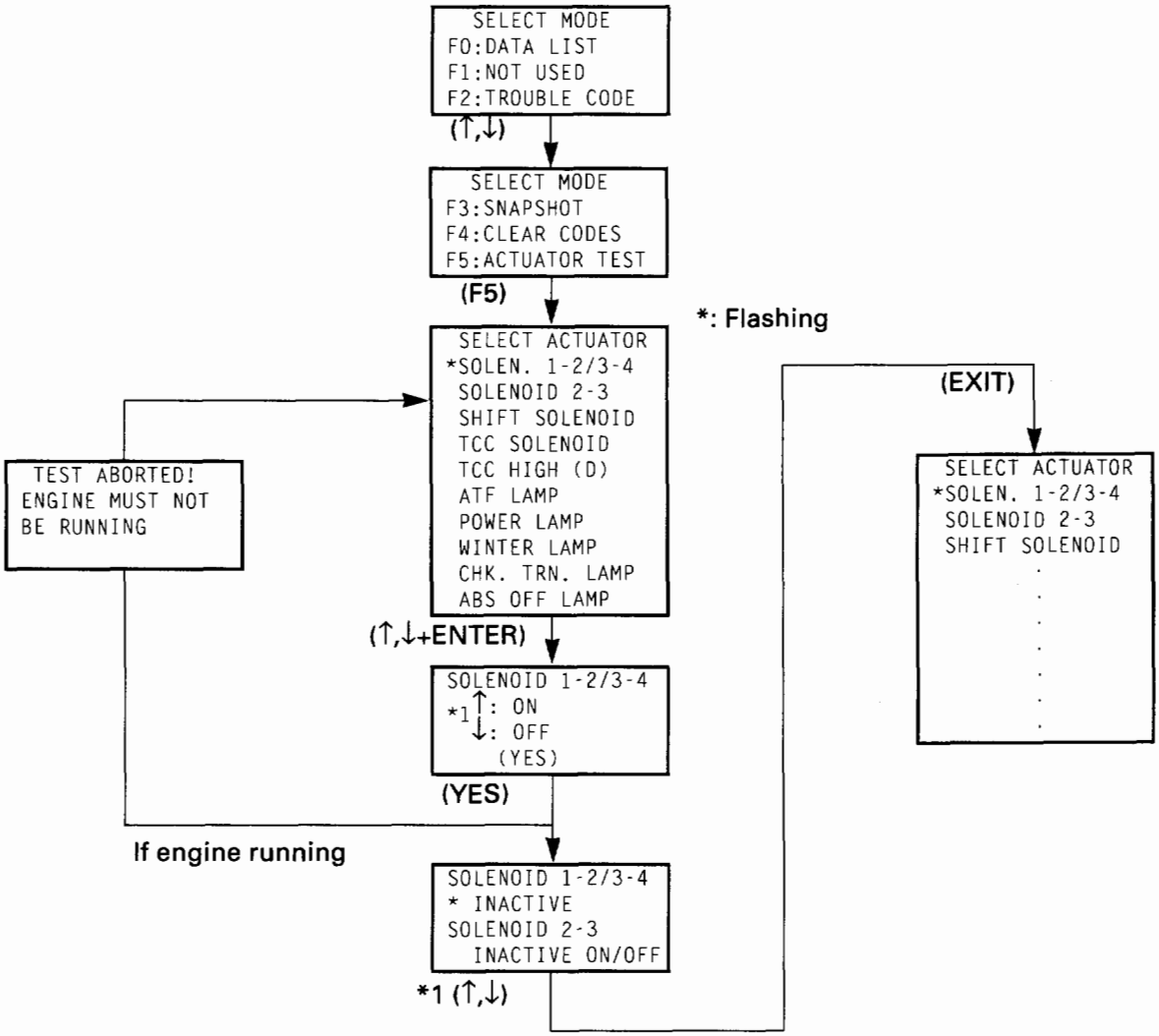

*1: The "↑" key is ON and the "↓" key is OFF.

F8: ECU CONTROL

The purpose of the F8: ECU CONTROL mode is to change the current of force motor solenoid.

```
  SELECT MODE
F6:NOT USED
F7:NOT USED
F8:ECU CONTROL
```

(F8) ↓

```
 FORCE MOTOR CTL.
↑: INCREASE
↓: DECREASE
    (YES)
```

(YES) ↓

```
 FORCE MOTOR CUR.
   * 0.00A
CALCULAT. PRESS.
    3.7 bar
```

(↑,↓) ↓

(EXIT) ↓

```
  SELECT MODE
F0: DATA LIST
F1: NOT USED
F2: TROUBLE CODE
```

(↑,↓) ↓

```
  SELECT MODE
F3: SNAPSHOT
F4: CLEAR CODES
F5: ACTUATOR TEST
```

(↑,↓) ↓

```
  SELECT MODE
F6: NOT USED
F7: NOT USED
F8: ECU CONTROL
```

You can change the current of force motor solenoid by ↑ or ↓ key.

CLEAR DTC

Remark: If you clear the DTC (Diagnosis Trouble Codes) you will not be able to read any codes recorded during the last Trouble.

Remark: To be able to use the DTC again to identify a problem you will need to reproduce the fault or the problem. This may require a new test drive or just turning the ignition on (this depends on the nature of the fault).

1. IF you have a TECH1:
   (1) Connect the TECH1 if it is still not connected GOTHROUGH **TECH1 CONNECTION**.
   (2) Push "F4" and answer "Yes" to the question "Do you really want to clear the codes?"
      ① When a malfunction remains as it is the TECH1 displays "4L30E CODES NOT CLEARED". This means that the problem is still there or that the recovery was not done please GOTO **DTC CHECK**.
      ② When a malfunction has been repaired and the recovery is done the TECH1 displays "4L30E CODES CLEARED".
2. IF you have no TECH1:
   (1) Short the Diagnosis Connector C-92 terminal 1 to terminal 2 (ground) (Fig. 7A-9c).
      ① IF it is flashing and the flash is 0.4 seconds ON and 0.4 second OFF without interruption, this means that there is no DTC. The DTCs are already cleared.

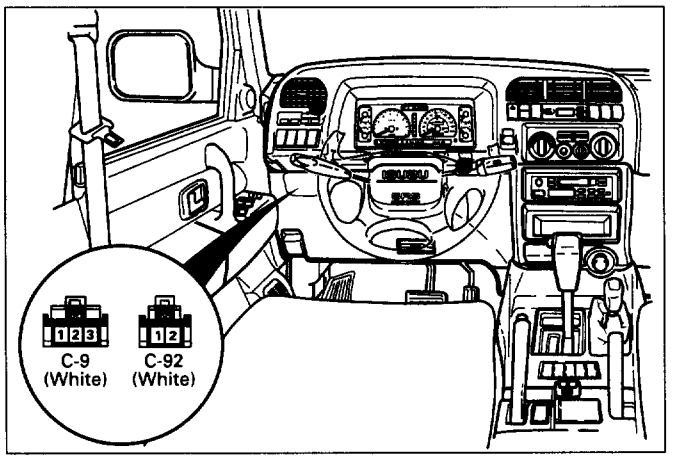

Fig. 7A-9c

   (2) IF a code is flashed, wait until the lamp is flashing.
   (3) Push POWER SWITCH then WINTER SWITCH (do this within 3 second).
      ① If you continue to have malfunctions: This means that the problem is still there or that the recovery was not done please see **DTC CHECK**.
   (4) IF you can not clear the DTC:
      ① GOTHROUGH **TCM PRECAUTIONS**.
      ② Disconnect the TCM.
      ③ Reconnect the TCM.
      ④ IF the DTC is not cleared: GOTO **TCM MEM-CAL REPLACEMENT**.

DTC CHECK

1 Diagnosis Trouble Codes (DTC) have been identified by TECH1 or FLASHING CODES.

2. You have written the list of the DTC. The order of the malfunctions has no meanings for this TCM. Usually only one or two malfunctions should be set for a given problem.

3. Check directly the DTCs you identified. The DTC are sorted by number. See Chart 2: DIAGNOSTIC TROUBLE CODES (Page 7A-71).

F0: DATA LIST QUICK CHECK

TECH 1 DISPLAY	CONDITONS	CORRECT VALUE	FOR DIAGNOSIS SEE*1
BATTERY VOLTAGE	Ignition ON	9 V < voltage < 16 V (V)	DTC 25 or 26
FORCE MOTOR CUR.	Engine at idle speed Parking brake on Selector lever position "D"	approx. 0.9 A	DTC 35
CALCULAT. PRESS.		approx. 4.0 bar	
SOLENOID 1-2/3-4	Vehicle traveling at a speed of: approx. 50 km/h (32 mph) with selector lever in position "2" or approx. 70 km/h (44 mph) with selector lever in position "3"	ACTIVE	DTC 31 or 41
SOLENOID 2-3	Vehicle traveling at a speed of: approx. 10 km/h (6 mph) with selector lever in position "L" or approx. 30 km/h (18 mph) with selector lever in position "2"	ACTIVE	DTC 32 or 42
BAND APPLY SOL.	Engine at idle speed Selector lever position "L"	approx. 99% DC	DTC 34 or 44
TCC SOLENOID	Vehicle traveling at a speed of approx. 80 km/h (50 mph) Selector lever position "D"	ON	DTC 33 or 43
TCC SLIP RPM	Constant engine speed Selector lever position "D" TCC on	0 ± 10 RPM	DTC 33 or 43
BRAKE SWITCH	Ignition ON Brake pedal pressed	ACTIVE	DTC 55 or 56
AT INPUT SPEED	Engine speed ≦ 200 rpm Output speed > 1024 rpm Selector lever position "D", "3", "2", "L"	Engine speed: (RPM)	DTC 13 or 62
AT OUTPUT SPEED	Output speed ≦ 0 km/h (0 mph) Engine speed > 3000 rpm Selector lever position "D", "3", "2", "L"	Output speed: (MPH/KPH)	DTC 11 or 13
BAROMETER SENSOR	Engine at idle speed	0.9 ~ 1.0 bar approx. 0.02 V	–
SELECTOR POS.	Ignition ON Shift through all selector lever positions	Dependent on selector lever position P, R, N, D, 3, 2, L	DTC 53 or 54
C/C O/D LOCKOUT	When O/D OFF signal detected while cruise control system is in use	ACTIVE	–
ACTUAL GEAR	Vehicle traveling at a speed of approx. 100 km/h (62 mph) Selector lever position "D"	- 4 -	DTC 61

NOTE:

(*1) ....FOR DIAGNOSIS OF A DTC SEE CHART 2: DIAGNOSTIC TROUBLE CODES (DTC) (PAGE 71)

F0: DATA LIST QUICK CHECK (continued)

TECH 1 DISPLAY	CONDITONS	CORRECT VALUE	FOR DIAGNOSIS SEE*1
SELECTOR PIN A	Ignition ON Selector lever position: "P", "R", "3" or "2"	ACTIVE	DTC 53 or 54
SELECTOR PIN B	Ignition ON Selector lever position: "R", "N","D" or "3"	ACTIVE	DTC 53 or 54
SELECTOR PIN C	Ignition ON Selector lever position: "D", "3", "2" or "L"	ACTIVE	DTC 53 or 54
SELECTOR PIN P	Ignition ON Selector lever position: "P", "N", "3" or "L"	ACTIVE	DTC 53 or 54
TPS SIGNAL	Ignition ON Throttle body in idle speed position Throttle body in full load position	0.1 V to 0.96 V (0%) 4.9 V or less (99%)	DTC 21 or 22
KICK DOWN SWITCH	Ignition ON Depress accelerator pedal to stop	ACTIVE	DTC 52
A/C REQUEST	Engine running. Air conditioning ON. Compressor engaged.	ACTIVE	CHECK WIRE FROM TCM CONNECTOR C-91 TERMINAL D8 FOR OPEN CIRCUIT.
TRANSM. OIL TEMP.	Engine running	70 - 120°C/158 - 248°F approx. 1.00 ~ 3.10 V	DTC 15 or 16
COOLANT TEMP SW.	Ignition ON: Engine warm	COLD (≦ 63°C) WARM (> 70°C)	DTC 51
WINTER SW. (-D-)	Ignition ON Selector lever position "D" Press "WINTER" switch	ACTIVE	TRANSMISSION OPERATING MODE TEST ~~SEE PAGE 142~~
WINTER LAMP	Engine running Selector lever position "D" Press "WINTER" switch	ON	
POWER SWITCH	Ignition ON Press "POWER" switch	ACTIVE	TRANSMISSION OPERATING MODE TEST ~~SEE PAGE 142~~
POWER LAMP	Engine running Press "POWER" switch	ON	

• IF ALL VALUES ARE CORRECT, CONTINUE DIAGNOSIS WITH F5: ACTUATOR TEST QUICK CHECK.

NOTE:

*1 FOR DIAGNOSIS OF A DTC SEE CHART 2: DIAGNOSTIC TROUBLE CODES (DTC) ~~(PAGE 71)~~

CHART 1
DIAGNOSIS CONNECTOR AND VOLTAGE SUPPLY TEST

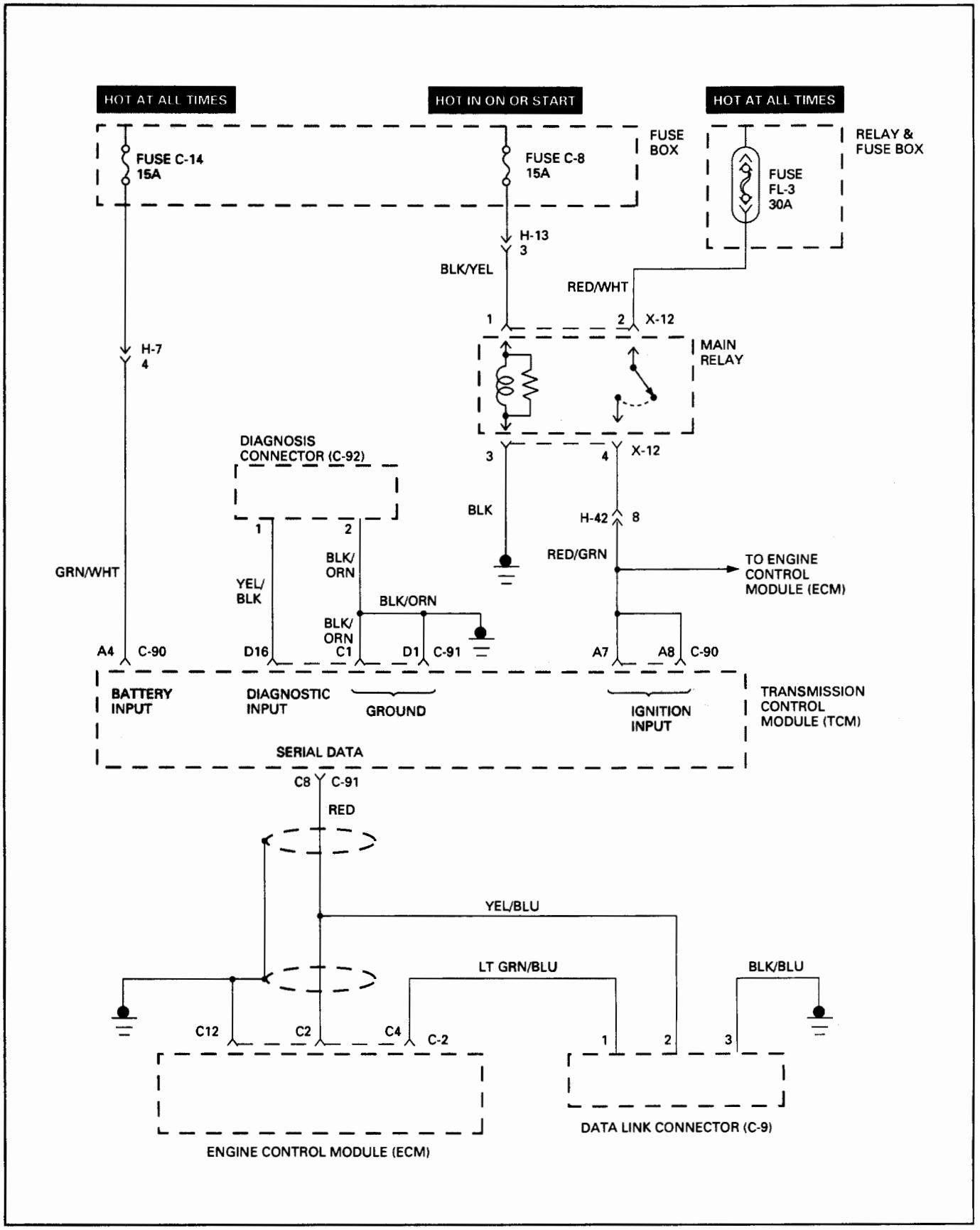

CHART 1

DIAGNOSIS CONNECTOR AND VOLTAGE SUPPLY TEST

TECH 1 REFERS TO CHART 1 WHEN THE EQUIPMENT IS CORRECTLY CONNECTED, BUT NO DATA (WITH IGNITION ON) IS RECEIVED FROM TECH 1.

- PERFORM TECH 1 SELF-TEST.

IS TECH 1 OK?

YES

- IGNITION SWITCH OFF.
- DISCONNECT TCM CONNECTOR C-90 AND C-91.
- IGNITION SWITCH ON.
- CONNECT VOLTMETER BETWEEN TERMINAL A4 AND GROUND TERMINAL C1 OR D1 OF TCM CONNECTOR.
- THEN CONNECT VOLTMETER BETWEEN TERMINAL A7 OR A8 AND GROUND TERMINAL C1 OR D1 OF TCM CONNECTOR.

DO BOTH DISPLAYS INDICATE BATTERY VOLTAGE?

YES

- IGNITON SWITCH OFF.
- CONNECT OHMMETER BETWEEN TERMINAL 2 OF 3-PIN DATA LINK CONNECTOR C-9 AND TERMINAL C8 OF TCM CONNECTOR C-91.
- THEN CONNECT OHMMETER BETWEEN TERMINAL 1 OF 2-PIN DIAGNOSTIC CONNECTOR C-92 AND TERMINAL D16 OF TCM CONNECTOR C-91
- THEN CONNECT OHMMETER BETWEEN TERMINAL 2 OF 2-PIN DIAGNOSTIC CONNECTOR C-92 AND TERMINAL C1 OR D1 OF TCM CONNECTOR C-91.

DO BOTH DISPLAYS INDICATE APPROXIMATELY 0 OHMS?

YES

- CHECK FOR SHORT BETWEEN TERMINAL C8 AND GROUND AND BETWEEN TERMINAL C8 AND B+.
  IF OK, GOTO **TCM MEM-CAL REPLACEMENT.**

NO

CHECK WIRE FOR OPEN.

NO

CHECK FUSE OR WIRE FOR OPEN.

NO

SEE TECH 1 OPERATOR'S MANUAL.

CHART 2: DIAGNOSTIC TROUBLE CODE (DTC)

DTC	MALFUNCTION	FOR DIAGNOSIS SEE PAGE
11	OUTPUT SPEED FAILURE	7A - 74
13	ENGINE SPEED FAILURE	7A - 78
15	TRANSMISSION OIL TEMPERATURE SHORT TO PLUS OR OPEN	7A - 80
16	TRANSMISSION OIL TEMPERATURE SHORT TO GROUND	7A - 82
21	THROTTLE POSITION SENSOR SHORT TO PLUS OR OPEN	7A - 84
22	THROTTLE POSITION SENSOR SHORT TO GROUND	7A - 86
23	THROTTLE POSITION SENSOR CONNECTOR OPEN	7A - 88
25	SUPPLY VOLTAGE TOO LOW	7A - 90
26	SUPPLY VOLTAGE TOO HIGH	7A - 92
31	SOLENOID 1-2/3-4 SHORT TO GROUND OR OPEN	7A - 94
32	SOLENOID 2-3 SHORT TO GROUND OR OPEN	7A - 96
33	TCC HIGH SHORT TO PLUS OR OPEN	7A - 98
34	BAND APPLY SOLENOID SHORT TO GROUND OR OPEN	7A - 102
35	FORCE MOTOR OPEN OR SHORT TO PLUS OR GROUND	7A - 104
36	SHIFT HIGH SHORT TO GROUND OR OPEN	7A - 106
37	TORQUE MANAGEMENT SERIAL LINE FAULTY	7A - 108
41	SOLENOID 1-2/3-4 SHORT TO PLUS	7A - 110
42	SOLENOID 2-3 SHORT TO PLUS	7A - 112
43	TCC HIGH SHORT TO GROUND	7A - 114
44	BAND APPLY SOLENOID SHORT TO PLUS	7A - 116
46	SHIFT HIGH SHORT TO PLUS	7A - 118
51	ENGINE COOLANT SWITCH SHORT TO GROUND, PLUS OR OPEN	7A - 120
52	KICK DOWN ALWAYS ON OR SHORT TO GROUND	7A - 122
53	MODE SWITCH IN P OR N OR R BAD POSITION	7A - 124
54	MODE SWITCH ILLEGAL POSITION	7A - 126
55	BRAKE SWITCH SHORT TO GROUND OR OPEN	7A - 128
56	BRAKE SWITCH SHORT TO PLUS	7A - 130
61	GEAR ERROR	7A - 132
62	DOWNSHIFT PROTECTION	7A - 134
63	EPROM CSUM FAILURE	7A - 137
82	SHIFT OR BAND APPLY SOLENOIDS FAULTY DURING DRIVING	7A - 138

CHART 3: TRANSMISSION AND TCM IDENTIFICATION

Chart 3 contains a list of all important information concerning rear axle ratio, Transmission Control Module (TCM), and transmission identification.

VEHICLE		Rr axle Ratio	TCM		TRANSMISSION		
Type	Engine		ISUZU Parts No.	Alpha Code	Calibration Code	Isuzu Part No.	Model Code
Isuzu/ Trooper	3.2L V6	4.555	8-16218-439-0 8-16218-449-0	JA JB	G16	8-96017-587-0	GW (4X4)

ISUZU TROOPER

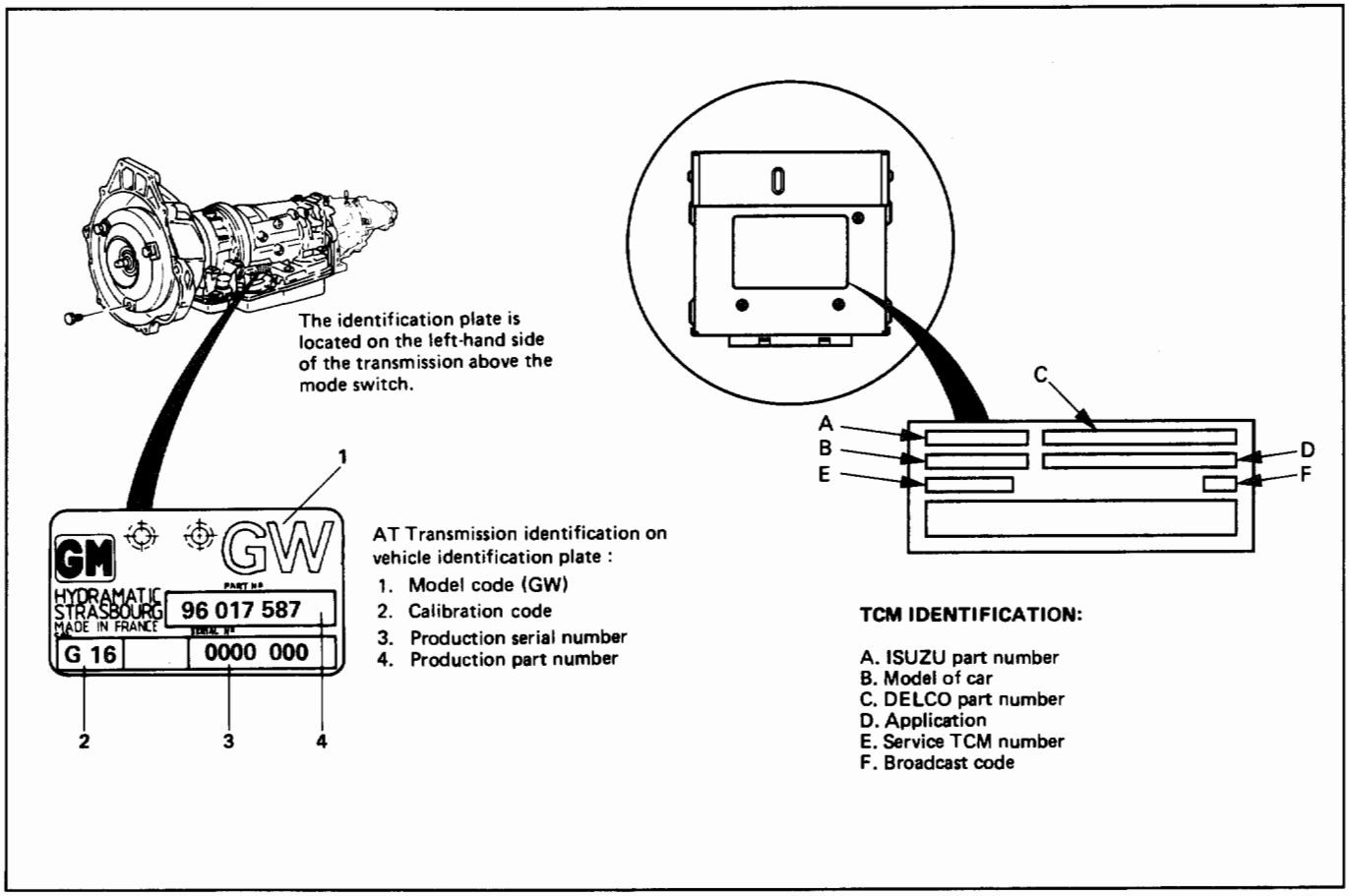

Fig. 7A-10

CHART 5: F5: ACTUATOR TEST QUICK CHECK

Before carrying out the Actuator Test, the selector lever should be placed in selector position "N". The ignition should be switched ON, engine not running.

TECH 1 DISPLAY	NOTES	CORRECT RESULT	FOR DIAGNOSIS SEE*1
SOLEN. 1-2/3-4	Press arrow up (ON) Press arrow down (OFF)	"Click" heard from transmission	DTC 31 or 41
SOLENOID 2-3	Press arrow up (ON) Press arrow down (OFF)	"Click" heard from transmission	DTC 32 or 42
SHIFT SOLENOID	Press arrow up (ON) Press arrow down (OFF)	"Click" heard from transmission	DTC 82
TCC SOLENOID	Not used	–	–
TCC HIGH (D)	Press arrow up (ON) Press arrow down (OFF)	"Click" heard from transmission	DTC 33 or 43
ATF LAMP	Press arrow up (ON) Press arrow down (OFF)	A/T OIL TEMP lamp ON	A/T OIL TEMPERATURE INDICATOR TEST (~~PAGE 141~~)
POWER LAMP	Press arrow up (ON) Press arrow down (OFF)	POWER lamp ON	TRANSMISSION OPERATING MODE TEST (~~PAGE 142~~)
WINTER LAMP	Press arrow up (ON) Press arrow down (OFF)	WINTER lamp ON	
CHK. TRN. LAMP	Press arrow up (ON) Press arrow down (OFF)	CHECK TRANS lamp ON	CHECK TRANS CHECK (~~PAGE 48~~)
ABS OFF LAMP	Not used	–	–

NOTE:

(*1) FOR DIAGNOSIS OF A DTC SEE CHART 2: DIAGNOSTIC TROUBLE CODES (DTC) (~~PAGE 71~~)

DIAGNOSTIC TROUBLE CODE (DTC) 11
OUTPUT SPEED FAILURE

This DTC flashes the CHECK TRANS indicator and sets the BACKUP MODE.

Circuit Description:
The transmission output speed sensor provides information on vehicle speed to the Transmission Control Module (TCM). The speed sensor circuit consists of a magnetic induction type sensor. The sensor is mounted above a target wheel pressed on the output shaft in the transmission extension. As the output shaft turns, the target wheel teeth induce a variable voltage in the magnetic pickup. This alternating current (AC) signal is provided to the TCM. The voltage increases with the speed of the wheel but this is not used to define the speed of the vehicle. As the vehicle moves faster, the signal alternates faster between positive and negative voltages. The Output speed information is proportional to the frequency of the signal.

Diagnostic Aids:
- This diagnostic is not an electrical test done by the TCM but a test between different information ("logic test").
- Detection conditions:
  ① Output Speed < OR = 0 KPH (0 MPH).
  ② Engine Speed > 3000 RPM.
  ③ No Malfunction: Engine Speed DTC 13. Mode Switch DTC54.
  ④ Selector lever not in Park, Reverse, or Neutral.
  ⑤ The conditions need to be present for at least 5 seconds.
- Action after the detection time:
  ① CHECK TRANS Indicator is turned ON.
  ② TCM in BACKUP MODE
- Recovery conditions : To recover do an IGNITION CYCLE.

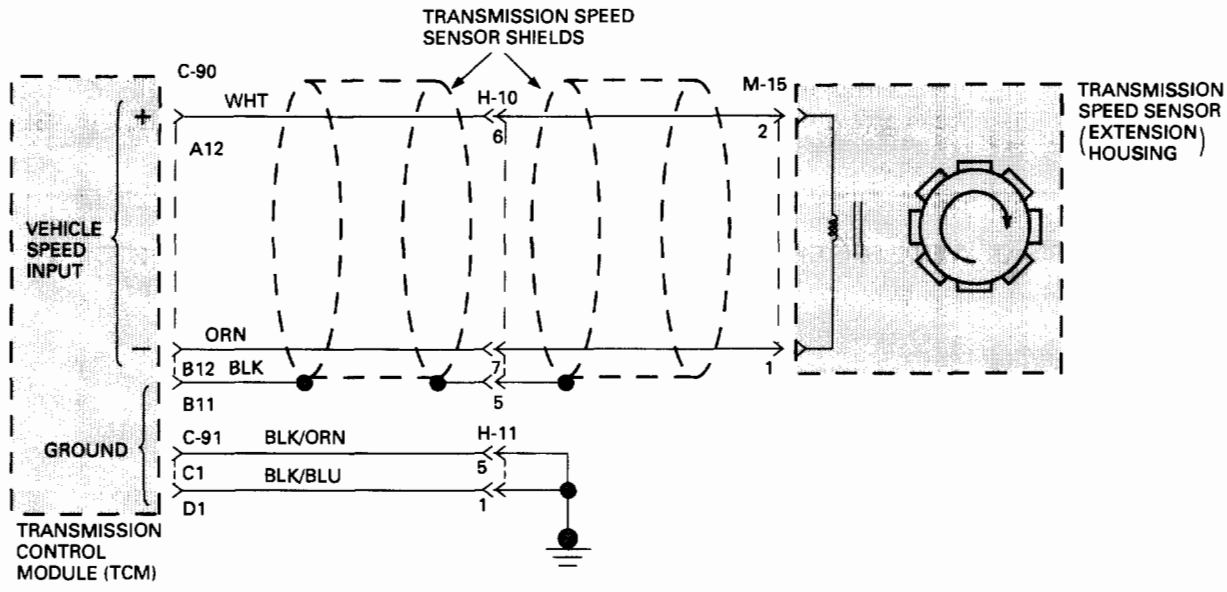

DIAGNOSTIC TROUBLE CODE (DTC) 11
OUTPUT SPEED FAILURE

CAUTION: If wire to connector C-90 terminal B12 is short to voltage, Transmission Control Module (TCM) will be damaged.

IF the DTC 53 is set:

- YES → GOTHROUGH **DTC 53** first and do a test drive.
- NO → IF you have a SCAN TOOL: TECH1?

IF you have a SCAN TOOL: TECH1?

- YES →
  - Raise drive wheels.
  - Connect the TECH1 GOTHROUGH **TECH1 CONNECTION.**
  - Push "F0": DATALIST: DISPLAY. **Read** "AT OUTPUT SPEED".

  IF: Output Speed different from 0 **RPM** when the wheels are turning:
  - YES → Problem is intermittent. GOTO **INTERMITTENT CONDITIONS.**
  - NO → (to NO branch below)
- NO →
  - Ignition switch OFF.
  - Disconnect TCM connector C-90 & C-91.
  - Connect ohmmeter between connector C-90 terminal A12 and terminal B12.

  IF: display is approx. 3K ohms:
  - YES →
    - Connect ohmmeter between connector C-90 terminal A12 and ground connector C-91 terminal C1.

    IF: display indicates an open circuit:
    - YES → Check for faulty TCM connection. IF OK GOTO **TCM MEM-CAL REPLACEMENT.**
    - NO →

    HINT: the wire between TCM terminal B12 and sensor connector M-15 terminal 1 can be shorted to ground or open without creating a problem because the TCM B12 pin is connected to the TCM ground internally and the signal is detected only on the A12 input.
    - Check wire for a short to ground between terminal A12 and sensor connector M-15 terminal 2.

    IF: display indicates a short circuit:

    A
    CONTINUED ON NEXT PAGE
  - NO →
    - Disconnect transmission speed sensor connector M-15.
    - Connect ohmmeter between terminals 1 and 2 of the speed sensor.

    IF: display approx. 3K ohms:
    - YES →
      - Wires from Connector C-90 to sensor connector are open or shorted together.
      - Repair.
    - NO → Replace transmission speed sensor.

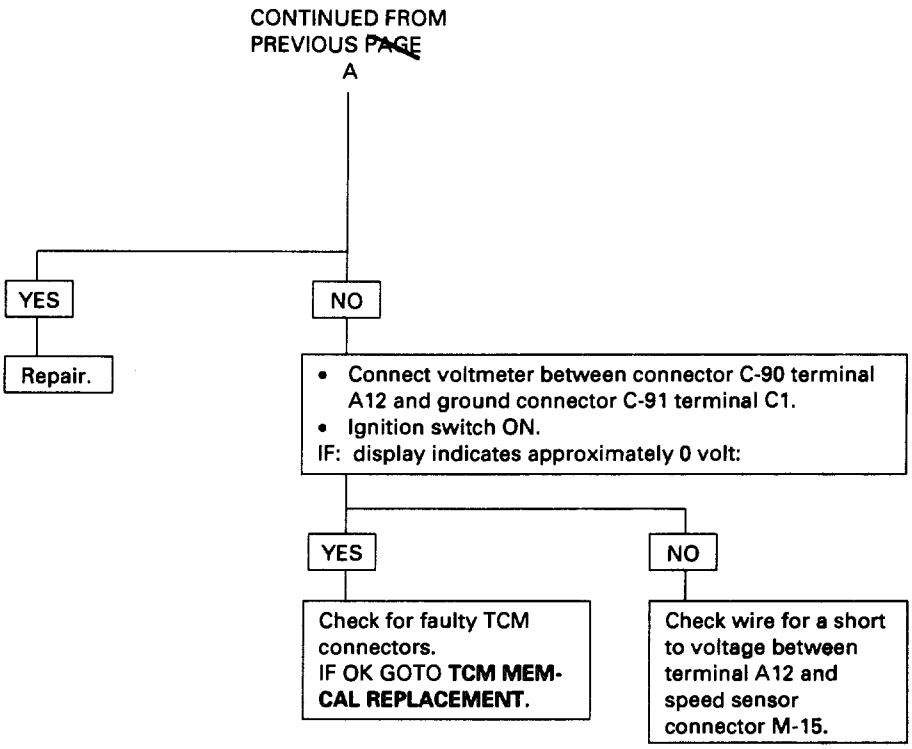
CONTINUED FROM
PREVIOUS PAGE
A
YES
NO
Repair.
• Connect voltmeter between connector C-90 terminal A12 and ground connector C-91 terminal C1.
• Ignition switch ON.
IF: display indicates approximately 0 volt:
YES
NO
Check for faulty TCM connectors.
IF OK GOTO TCM MEM-CAL REPLACEMENT.
Check wire for a short to voltage between terminal A12 and speed sensor connector M-15.

MEMO

DIAGNOSTIC TROUBLE CODE (DTC) 13

ENGINE SPEED FAILURE

This DTC flashes the CHECK TRANS indicator and set the BACKUP MODE.

Circuit Description:

The ignition module sends a signal to the Transmission Control Module (TCM) that indicates engine speed in RPM. The Engine Control Module (ECM) also receives this signal. When the vehicle is in neutral gear and the engine is at idle, the engine speed should be approximately 800 RPM.

Diagnostic Aids:

- This Diagnostic is not an electrical test done by the TCM but a test between different information ("logic test").
- Detection conditions:
  - ① Engine speed < or = 200 RPM.
  - ② Output Speed > 1024 RPM.
  - ③ Acceleration > 2 Km/h/s.
  - ④ No DTC: Output Speed DTC11, Downshift Protection DTC62 or Mode Switch Illegal Position DTC54.
  - ⑤ Selector Lever not in Park or Neutral.
  - ⑥ The conditions need to be present for at least 0.5 second.
- Action after the detection time: BACKUP MODE
- Recovery conditions: To recover do an IGNITION CYCLE

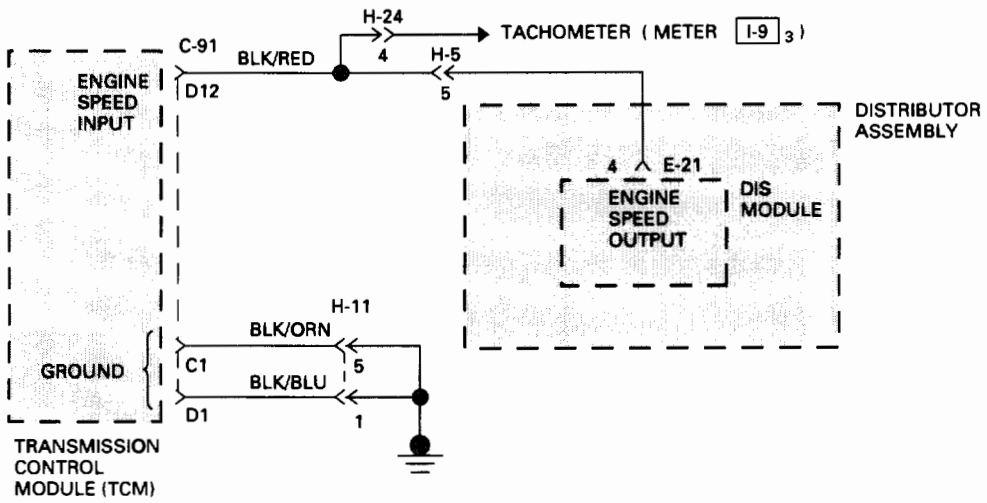

DIAGNOSTIC TROUBLE CODE (DTC) 13
ENGINE SPEED FAILURE

Install scan tool.
GOTHROUGH **TECH 1 CONNECTION.**

- Engine running at idle.
- Brake applied.
- Selector lever position "N" or "P".
- Selector "F0: DATA LIST: AT INPUT SPEED".

IF: TECH1 DISPLAY approximately 800 RPM:

YES

This system is functioning correctly.
The problem is probably intermittent.
GOTO
INTERMITTENT CONDITIONS.

NO

IF: Tachometer displays engine speed?

YES

- Check wire for open or short to ground or short to voltage between Transmission Control Module (TCM) and connector C-90 & C-91, and connector C-91 terminal D12 and ignition control module connector E-21 terminal 4, and check intermediate connector H-5 terminal 5.
- Repair harness. If still not working: GOTO **TCM MEM-CAL REPLACEMENT.**

NO

- Check wire for open or short to ground or short to voltage between Tachometer connector I-9 terminal 3 and ignition control module connector E-21 terminal 4 or between these terminals and intermediate connector H-24 terminal 4.
- Repair harness. If still not working:
  Check Engine electrical section.
  If still problem, replace ignition control module.

DIAGNOSTIC TROUBLE CODE (DTC) 15
TRANSMISSION OIL TEMPERATURE SHORT TO PLUS OR OPEN

This DTC does NOT flash the CHECK TRANS indicator and does NOT set the BACKUP MODE.

Circuit Description:

- The transmission oil temperature sensor is a thermistor within the internal wiring harness of the transmission in the adaptor case oil pan. The Transmission Control Module (TCM) applies 5 volts to the sensor connector M-6 terminal 3(C). The other side of the sensor is connected to ground through the TCM terminal C14.
  When the transmission oil is cold, the sensor resistance is high and the TCM will sense high signal voltage.
- As the transmission oil temperature warms to normal transmission operating temperature of 80°C (176°F), the sensor resistance becomes less and the voltage decreases at about 3.5 volts. Note, for more accuracy the measurement is done differently for low temperature (less than 45°C) and high temperature (more than 50°C).
- When DTC15 is set, the transmission will use a warm value for operation, but the scan tool will display the actual oil temperature.
- Table shows thermistor resistance at different temperatures.

Table:

°C	°F	Resistance (kΩ)
–40	–40	672
0	32	65
20	68	25
80	176	2.5
120	248	0.78
150	304	0.37

Diagnostic Aids:

- This Diagnostic is an electrical test done by the TCM.
- Detection conditions:
  ① Voltage between terminals B3 and C14 > 4.74 volts.
  ② The condition needs to be present for at least 20 seconds. Note: during the detection time the TCM reads the high voltage that defines a –40°C temperature.
- Action after the detection time: Default Transmission Oil Temperature is set to 100°C. But winter mode still available.
- Recovery conditions: To recover when voltage < or = to 4.74 volts after detection time.

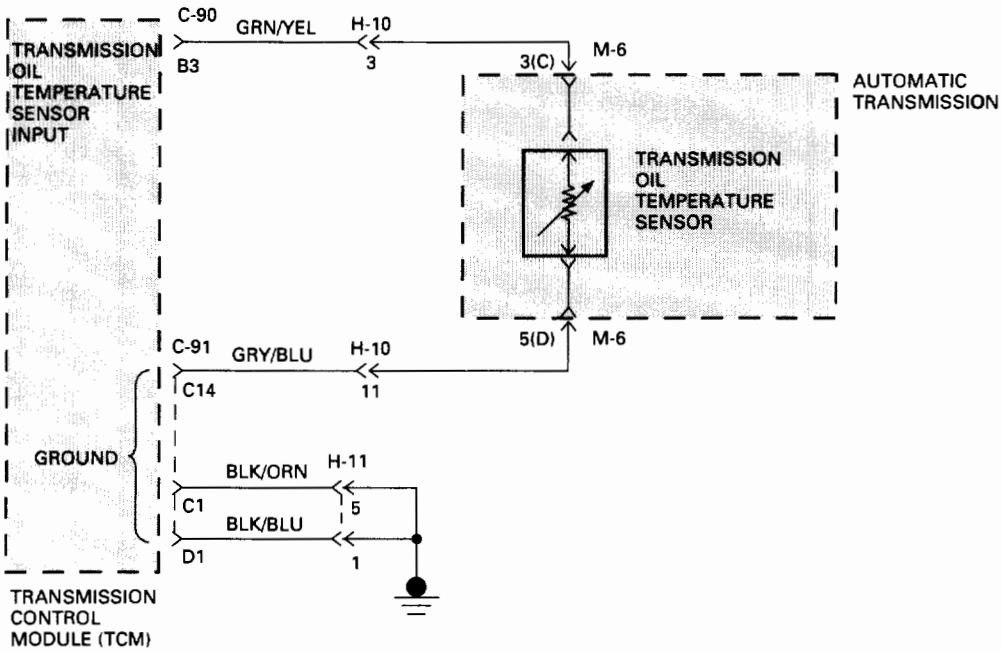

DIAGNOSTIC TROUBLE CODE (DTC) 15

TRANSMISSION OIL TEMPERATURE SHORT TO PLUS OR OPEN

Install scan tool.
GOTHROUGH **TECH1 CONNECTION.**

- Ignition switch ON. Engine not running.
- Selector lever position "P".
- Select "F0: DATA LIST: Trans. Oil Temp".

IF: TECH1 DISPLAY more than 4.74 Volts:

YES

- Connect voltmeter between connector C-90 terminal B3 and connector C-91 ground terminal C1.
  IF: If you have more than approximately 4.74 Volts:

YES

- Check for a short to plus or open between connector C-90 terminal B3 and connector C-91 terminal C14. This faulty connection can be at the connector M-6 terminal 3 (C) or 5 (D). This faulty connection can be at the intermediate connector H-10 terminals 3 or 11.
- Repair
  If not OK: Disconnect sensor.
- Connect ohmmeter between sensor terminals 3(C) and 5(D).
  Refer to the table of the resistance function of the temperature.
  If resistance not correct, replace the transmission oil temperature sensor.

NO

GOTO **TCM MEM-CAL REPLACEMENT.**

NO

DTC 15 is intermittent.
GOTO **INTERMITTENT CONDITIONS.**

DIAGNOSTIC TROUBLE CODE (DTC) 16
TRANSMISSION OIL TEMPERATURE SHORT TO GROUND

This DTC does NOT flash the CHECK TRANS indicator and does NOT set the BACKUP MODE.

Circuit Description:

- The transmission oil temperature sensor is a thermistor within the internal wiring harness of the transmission in the adaptor case oil pan. The Transmission Control Module (TCM) applies 5 volts to the sensor connector M-6 terminal 3(C). The other side of the sensor is connected to ground through the TCM terminal C14. When the transmission oil is cold, the sensor resistance is high and the TCM will sense high signal voltage.
- As the transmission oil temperature warms to normal transmission operating temperature of 80°C (176°F), the sensor resistance becomes less and the voltage decreases at about 3.5 volts. Note, for more accuracy the measurement is done differently for low temperature (less than 45°C) and high temperature (more than 50°C).
- When DTC16 is set, the transmission will use a warm value for operation, but the scan tool will display the actual oil temperature.
- Table shows thermistor resistance at different temperatures.

Diagnostic Aids:

- This Diagnostic is an electrical test done by the TCM.
- Detection conditions:
  1. Voltage between terminals B3 and C14 < 0.4 volts.
  2. The condition needs to be present for at least 20 seconds. Note: during the detection time the TCM reads the low voltage that defines a 170°C temperature.
- Action after the detection time: Default Transmission Oil Temperature is set to 100°C. But winter mode still available.
- Recovery conditions: To recover when voltage > or = to 0.4 volts after detection time.

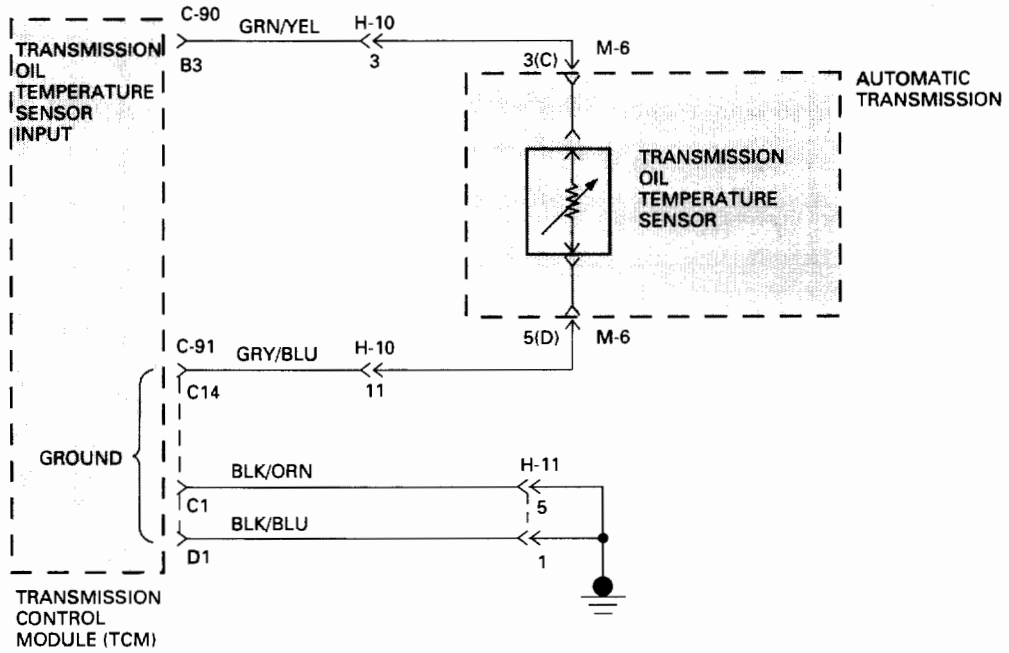

DIAGNOSTIC TROUBLE CODE (DTC) 16
TRANSMISSION OIL TEMPERATURE SHORT TO GROUND

Install scan tool.
GOTHROUGH **TECH1 CONNECTION.**

- Ignition switch ON. Engine not running.
- Selector lever position "P".
- Select "F0: DATA LIST: Trans. Oil Temp".

IF: TECH1 DISPLAY less than 0.4 Volts:

YES

- Connect voltmeter between connector C-90 terminal B3 and connector C-91 ground terminal C1.

IF: If you have less than approximately 0.4 Volts:

YES

- Check for a short to ground between connector C-90 terminal B3 and connector M-6 terminal 3 (C). This faulty connection can be at the intermediate connector H-10 terminal 3.
- Repair
  If not OK: Disconnect sensor.
- Connect ohmmeter between sensor terminals 3(C) and 5(D).
  Refer to the table of the resistance function of the temperature (DTC 15).
  If resistance not correct, replace sensor.

NO

GOTO **TCM MEM-CAL REPLACEMENT.**

NO

DTC 16 is intermittent.
GOTO **INTERMITTENT CONDITIONS.**

DIAGNOSTIC TROUBLE CODE (DTC) 21
THROTTLE POSITION SENSOR SHORT TO PLUS OR OPEN

This DTC flashes the CHECK TRANS indicator and sets the BACKUP MODE.

Circuit Description:

- The Throttle Position Sensor (TPS) provides a voltage signal that changes relative to the throttle plate position. Signal voltage between connector C-91 terminals C5 and C6 will vary from about 0.4 at idle to about 4.6 volts at wide open throttle.
- The Engine Control Module (ECM) also receives this signal. This TPS is a variable resistance with one side (connector E-5 terminal 2) connected only to the ECM connector to have the 5 volts supply voltage. The other side (connector E-5 terminal 1) is connected to the Transmission Control Module (TCM) (floating ground) and the ECM (ground). The "middle" (the wiper) (connector E-5 terminal 3) is connected to the TCM and the ECM.
- The ECM monitors output voltage from the TPS and determines fuel delivery based on throttle valve angle (driver demand).
- This TPS is an electrical component and must not be soaked in any liquid cleaner or solvent, as damage may result.

Diagnostic Aids:

- This Diagnostic is an electrical test done by the TCM.
- Detection conditions:
  1. Voltage between connector C-91 terminals C5 and C6 > 4.9 volts. This detection occurs when: The wiper is short to voltage (engine can stall) or open.
  2. The condition needs to be present for at least 0.5 seconds. Note: during the detection time the TCM reads "100% (wide open throttle)".
- Action after the detection time: BACKUP MODE.
- Recovery conditions: To recover when voltage < or = to 4.9 volts and do an IGNITION CYCLE.

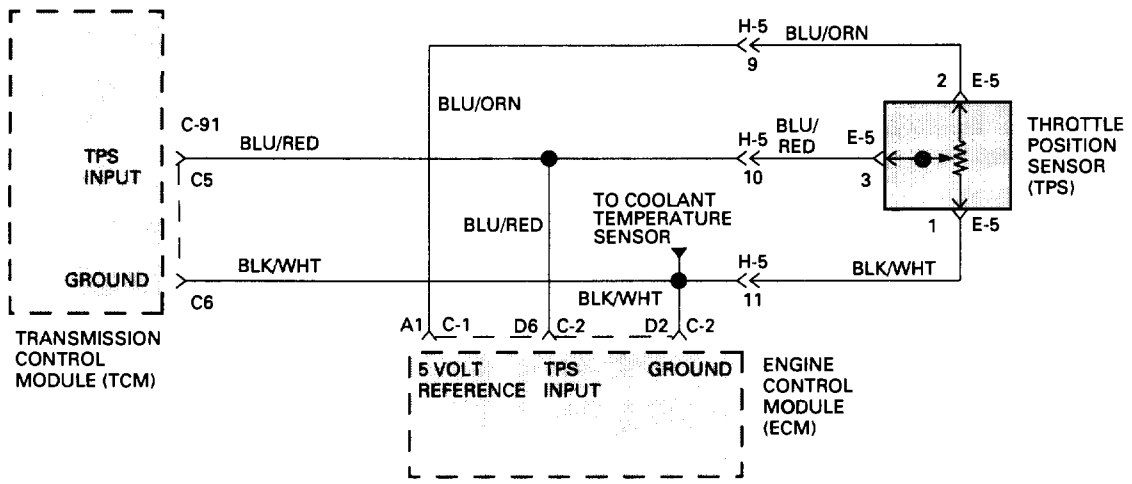

DIAGNOSTIC TROUBLE CODE (DTC) 21
THROTTLE POSITION SENSOR SHORT TO PLUS OR OPEN

Check Engine Control Module (ECM) DTC.
IF: DTC on Throttle Position Sensor (TPS) exists:

- YES → Check diagnosis of ECM and repair.
- NO →
  - Install scan tool GOTHROUGH **TECH1 CONNECTION.**
  - Ignition switch ON, engine not running.
  - Selector lever position "P".
  - Select F0: DATA LIST: "TPS SIGNAL".

  IF: TECH1 DISPLAY more than 4.9 volts:
  - YES →
    - Connect voltmeter between connector C-91 terminal C5 and TPS ground terminal C6.

    IF: If you have more than 4.9 volts:
    - YES →
      - Check for a short to voltage or open circuit between connector C-91 terminal C5 and connector E-5 terminal 3.
        This faulty connection can be at intermediate connector H-5 terminal 10.
        The short to voltage only can be at the ECM connector C-2 terminal D6.
      - Repair
        If not OK: Ignition switch OFF. Disconnect connector C-91.
      - Connect ohmmeter between connector C-91 terminal C5 and C6.
      - Check if the circuit is open.
      - Repair.
        If not OK: Disconnect sensor.
      - Connect ohmmeter between sensor terminals 3 wiper and 1 low side.
        If resistance between TPS terminal 3 and 1 does not change when the throttle valve angle is changed: Replace TPS.
    - NO → GOTO **TCM MEM-CAL REPLACEMENT.**
  - NO → DTC 21 is intermittent. GOTO **INTERMITTENT CONDITIONS.**

DIAGNOSTIC TROUBLE CODE (DTC) 22
THROTTLE POSITION SENSOR SHORT TO GROUND

This DTC flashes the CHECK TRANS indicator and sets the BACKUP MODE.

Circuit Description:

- The Throttle Position Sensor (TPS) provides a voltage signal that changes relative to the throttle plate position. Signal voltage between connector C-91 terminals C5 and C6 will vary from about 0.4 at idle to about 4.6 volts at wide open throttle.
- The Engine Control Module (ECM) also receives this signal. This TPS is a variable resistance with one side (connector E-5 terminal 2) connected only to the ECM connector to have the 5 volts supply voltage. The other side (connector E-5 terminal 1) is connected to the Transmission Control Module (TCM) (floating ground) and the ECM (ground). The "middle" (the wiper) (connector E-5 terminal 3) is connected to the TCM and the ECM.
- The TCM monitors output voltage from the TPS and determines fuel delivery based on throttle valve angle (driver demand)
- This TPS is an electrical component and must not be soaked in any liquid cleaner or solvent, as damage may result.

Diagnostic Aids:

- This Diagnostic is an electrical test done by the TCM.
- Detection conditions:
  - ① This detects a TPS wiper short to TCM ground (except certain conditions) and wiper short to TPS low. This also detects a TPS low open.
  - ② Voltage between connector C-91 terminals C5 and C6 < 0.2 volts.
  - ③ The condition needs to be present for at least 0.5 seconds. Note: during the detection time the TCM reads "0% (idle)".
- Action after the detection time: BACKUP MODE.
- Recovery conditions: To recover when voltage > or = to 0.2 volts and do an IGNITION CYCLE.

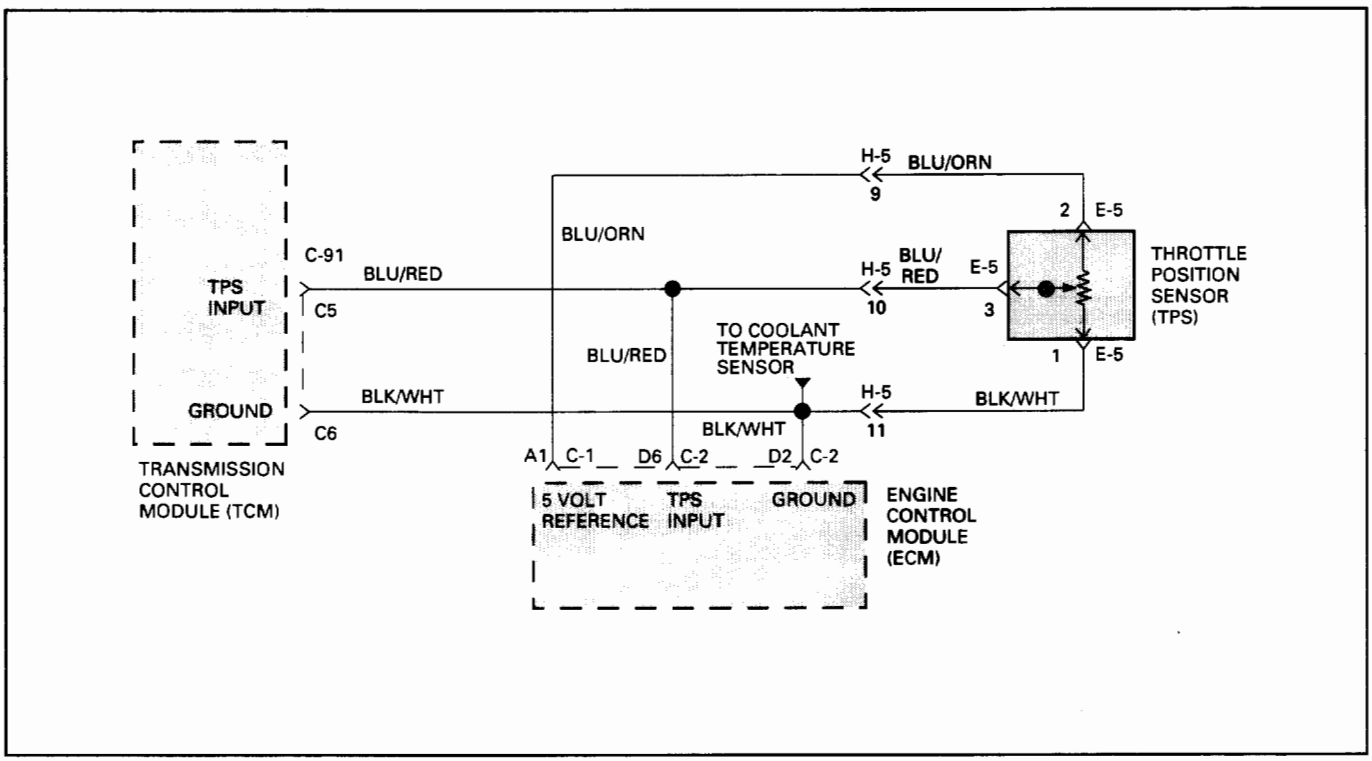

DIAGNOSTIC TROUBLE CODE (DTC) 22
THROTTLE POSITION SENSOR SHORT TO GROUND

Check Engine Control Module (ECM) DTC.
IF: DTC on Throttle Position Sensor (TPS) exists:

- YES → Check diagnosis of ECM and repair.
- NO →
  - Install scan tool GOTHROUGH **TECH1 CONNECTION.**
  - Ignition switch ON, engine not running.
  - Selector lever position "P".
  - Select F0: DATA LIST: "TPS SIGNAL".

  IF: TECH1 DISPLAY less than 0.2 volts:
  - YES →
    - Connect voltmeter between connector C-91 terminal C5 and TPS ground terminal C6.

      IF: If you have less than 0.2 volts:
      - YES →
        - Check for a short to ground between connector C-91 terminal C5 and connector E-5 terminal 3.
          This faulty connection can be at the intermediate connector H-5 terminal 10.This faulty connection can be at the ECM connector C-2 terminal D6.
        - Repair
          If not OK: Ignition switch OFF. Disconnect sensor connector E-5.
        - Connect ohmmeter between sensor terminals 3 wiper and 1 low side.
        - If resistance between TPS terminal 3 and 1 does not change when the throttle valve angle is changed: Replace TPS.
      - NO → GOTO **TCM MEM-CAL REPLACEMENT.**
  - NO → DTC 22 is intermittent. GOTO **INTERMITTENT CONDITIONS.**

DIAGNOSTIC TROUBLE CODE (DTC) 23
THROTTLE POSITION SENSOR CONNECTOR OPEN

This DTC flashes the CHECK TRANS indicator and sets the BACKUP MODE.

Circuit Description:

- The Throttle Position Sensor (TPS) provides a voltage signal that changes relative to the throttle plate position. Signal voltage between connector C-91 terminals C5 and C6 will vary from about 0.4 at idle to about 4.6 volts at wide open throttle.
- The Engine Control Module (ECM) also receives this signal. This TPS is a variable resistance with one side (connector E-5 terminal 2) connected only to the ECM connector to have the 5 volts supply voltage. The other side (connector E-5 terminal 1) is connected to the Transmission Control Module (TCM) (floating ground) and the ECM (ground). The "middle" (the wiper) (connector E-5 terminal 3) is connected to the TCM and the ECM.
- The TCM monitors output voltage from the TPS and determines fuel delivery based on throttle valve angle (driver demand).
- This TPS is an electrical component and must not be soaked in any liquid cleaner or solvent, as damage may result.

Diagnostic Aids:

- This Diagnostic is not an electrical test done by the TCM but a test between different information ("logic test").
- Detection conditions:
  - ① This detects the terminals C5 and C6 open or the connector E-5 open.
  - ② Throttle value opening > 42%.
  - ③ Engine Speed < 2200 RPM.
  - ④ Vehicle Speed <3 Km/h.
  - ⑤ No DTC: Engine Speed DTC13, Output Speed DTC11. Downshift Protection DTC62.
  - ⑥ Only with Selector Lever in Park or Neutral.
  - ⑦ The detection is authorized only during 6 seconds after the engine is cranked.
  - ⑧ The conditions need to be present for at least 3 seconds.
- Action after the detection time: BACKUP MODE.
- Recovery conditions: To recover do an IGNITION CYCLE.

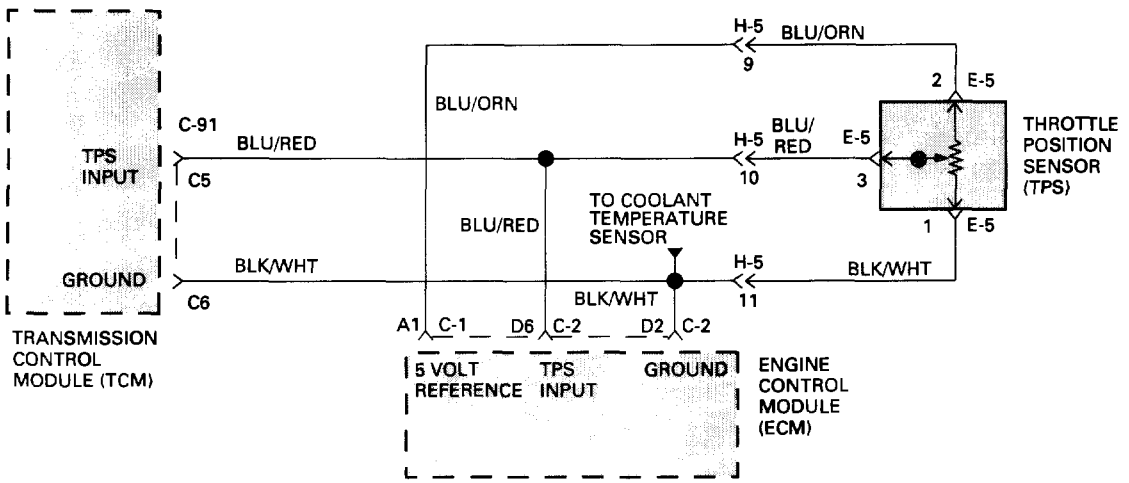

DIAGNOSTIC TROUBLE CODE (DTC) 23
THROTTLE POSITION SENSOR CONNECTOR OPEN

Check Engine Control Module (ECM) DTC.
IF: DTC on Throttle Position Sensor (TPS) exists:

- YES → Check diagnosis of ECM and repair.
- NO →
  - Install scan tool GOTHROUGH **TECH1 CONNECTION.**
  - Ignition switch ON, engine not running.
  - Selector lever position "P".
  - Select F0: DATA LIST: "TPS SIGNAL".

  IF: TECH1 DISPLAY approx. 2.5 volts whatever the throttle valve position:
  - NO → DTC 23 is intermittent. GOTO **INTERMITTENT CONDITIONS.**
  - YES → IF: TPS connector E-5 on the engine is open:
    - YES → Repair.
    - NO →
      - Ignition switch OFF. Disconnect connector C-91.
        Connect ohmmeter between connector C-91 terminals C5 and C6.
        If open circuit:
      - Check for an open between connector C-91 terminal C5 to connector E-5 terminal 3 with a simultaneous open of the terminal C6 to the connector E-5 terminal 1.
        This faulty connection can be at the intermediate connector H-5 terminal 10 and 11.
      - Repair.
        If not OK: Ignition switch OFF. Disconnect sensor.
      - Connect ohmmeter between sensor terminals 3 wiper and 1 low side.
        If resistance between TPS terminal 3 and 1 does not change when the throttle valve angle is changed: Replace TPS.

DIAGNOSTIC TROUBLE CODE (DTC) 25
SUPPLY VOLTAGE TOO LOW

This DTC flashes the CHECK TRANS indicator and sets the BACKUP MODE.

Circuit Description:
The ignition voltage of Transmission Control Module (TCM) terminals A7 and A8 is monitored by the TCM and when the voltage is too low (approx. 9 volts) the DTC25 is stored and the BACKUP MODE is set.

Diagnostic Aids:
- This Diagnostic is an electrical test done by the TCM.
- Detection conditions:
  ① Ignition voltage measured between TCM terminal A7 or A8 and ground C1 is lower than specification.
  Specification decreases with the transmission oil temperature:
  -40°C (-40°F) = 8.7 volts
  90°C (194°F) = 9.0 volts
  150°C (304°F) = 9.2 volts
  ② The condition needs to be present for at least 1 second
- Action after the detection time: BACKUP MODE
- Recovery conditions: To recover, the ignition voltage must be higher than specification.
  Specification decreases with the transmission oil temperature:
  -40°C (-40°F) = 9.2 volts
  90°C (194°F) = 9.5 volts
  150°C (304°F) = 9.6 volts

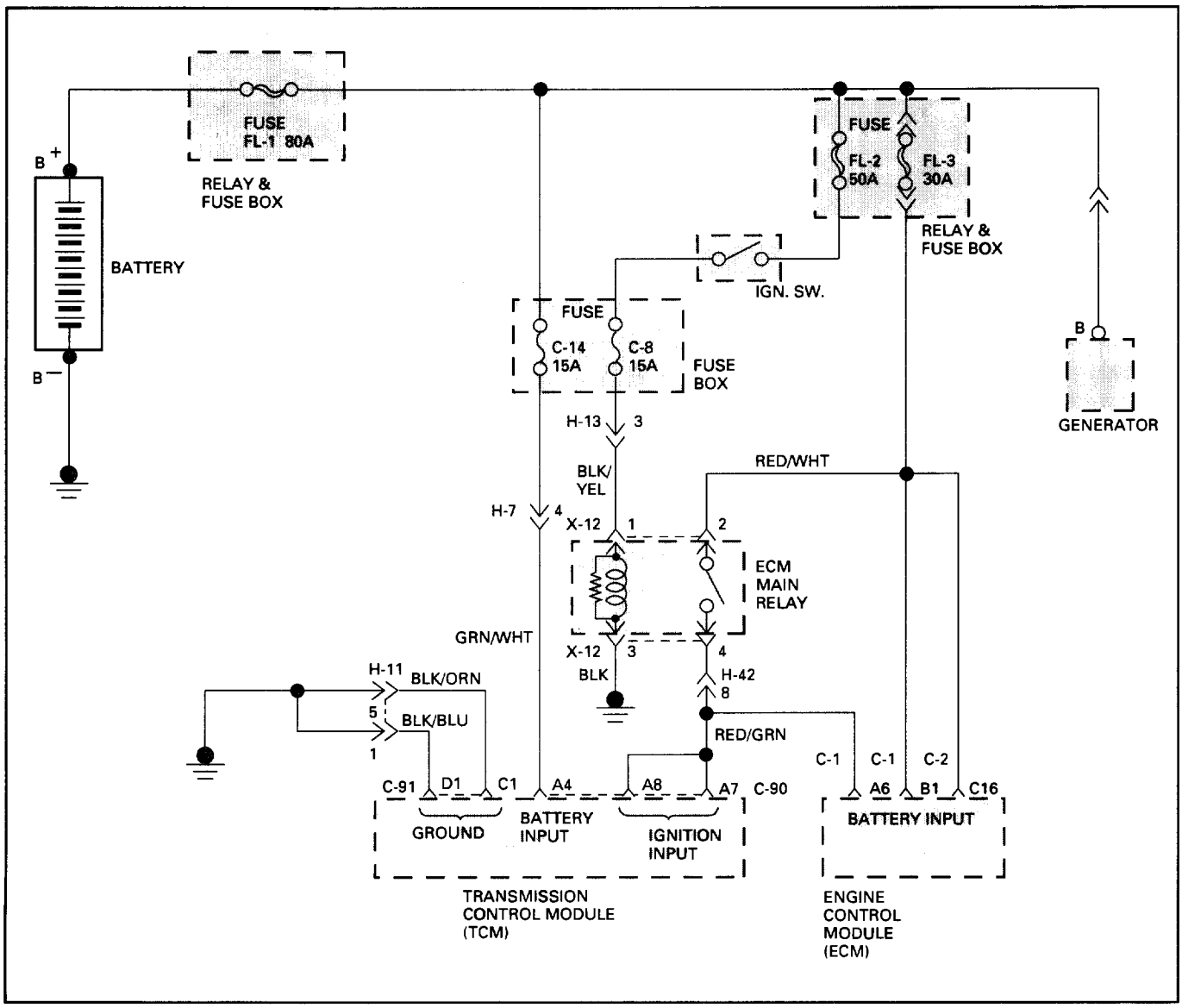

DIAGNOSTIC TROUBLE CODE (DTC) 25
SUPPLY VOLTAGE TOO LOW

- Ignition switch ON. Engine OFF.
- Connect voltmeter between B+ and B- terminals of battery.

IF: Display greater than 9 volts:

YES

- Engine running.
- Connect voltmeter between B+ and B- terminals of battery.

IF: display between 13 and 16 volts?

YES

- Ignition switch OFF.
- Disconnect Transmission Control Module (TCM) connector C-90 and C-91.
- Ignition switch ON. Engine OFF.
- Connect voltmeter between connector C-90 terminal A7 and connector C-91 terminal C1.

IF: Display greater than 9 volts:

YES

Check for faulty connection and if OK.
GOTO **INTERMITTENT CONDITIONS.**

NO

Check fuse and wire to A7, A8 and C1 for open circuit.

NO

Check regulator.

NO

Check battery.

DIAGNOSTIC TROUBLE CODE (DTC) 26
SUPPLY VOLTAGE TOO HIGH

This DTC flashes the CHECK TRANS indicator and sets the BACKUP MODE.

Circuit Description:
The ignition voltage of Transmission Control Module (TCM) terminals A7 and A8 is monitored by the TCM and when the voltage is too high (approx. 16 volts) the DTC26 is stored and the BACKUP MODE is set.

Diagnostic Aids:
- This Diagnostic is an electrical test done by the TCM.
- Detection conditions:
  ① Ignition voltage measured between TCM terminal A7 or A8 and ground C1 is higher than 16 volts.
  ② The condition needs to be present for at least 1 second.
- Action after the detection time : BACKUP MODE
- Recovery conditions: To recover, ignition voltage <16 volts.

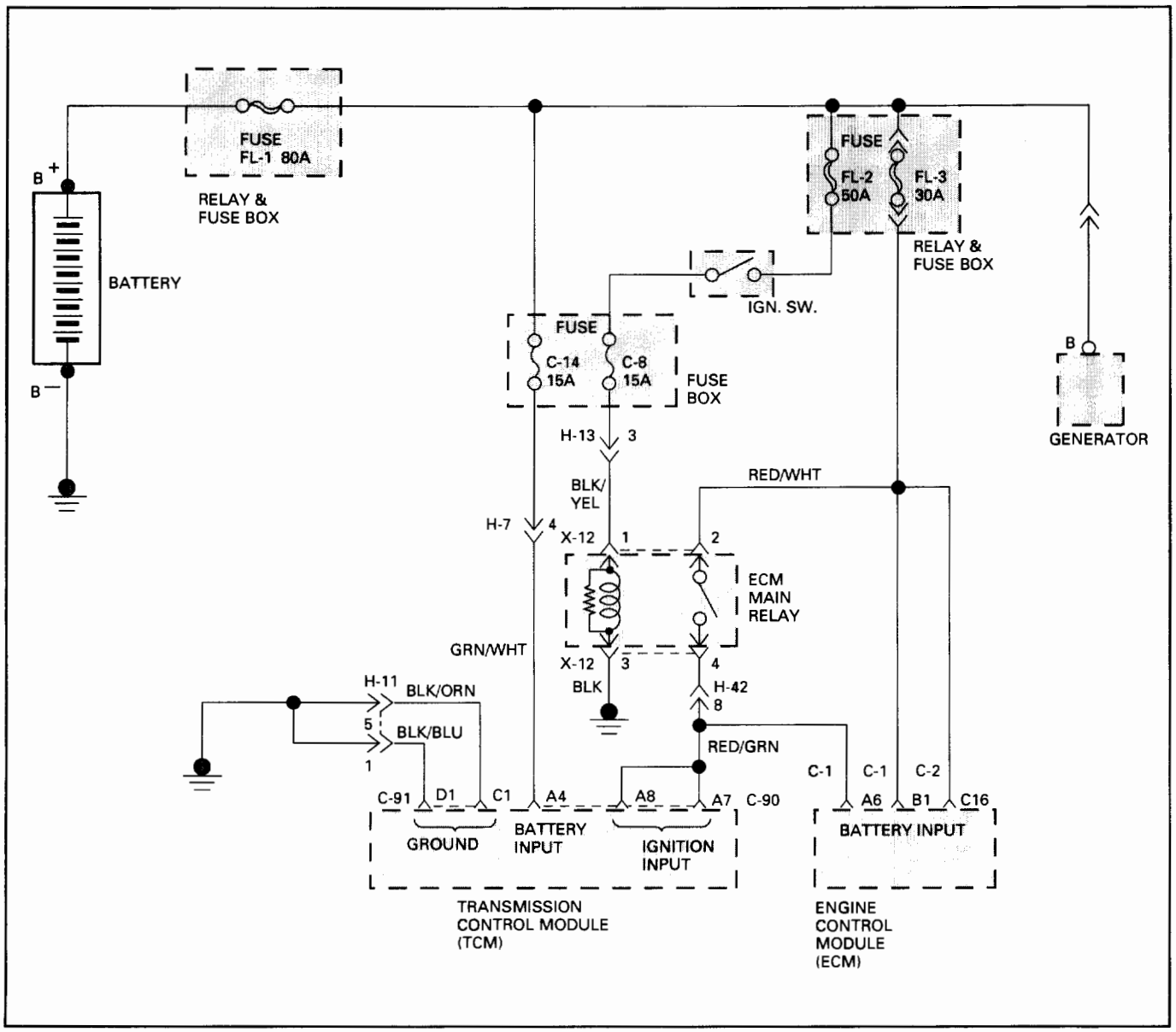

DIAGNOSTIC TROUBLE CODE (DTC) 26
SUPPLY VOLTAGE TOO HIGH

- Ignition switch ON. Engine OFF.
- Connect voltmeter between B+ and B- terminals of battery.

IF: Display greater than 16 volts:

YES

Check battery.

NO

- Engine running.
- Connect voltmeter between B+ and B- terminals of battery.

IF: Display between 3 to 16 volts:

YES

Check regulator.

NO

- Ignition switch OFF.
- Disconnect Transmission Control Module (TCM) connector C-90 and C-91.
- Ignition switch ON. Engine ON.
- Connect voltmeter between connector C-90 terminals A7 and connector C-91 terminal C1.

IF: Display higher than 16 volts:

YES

Check regulator.

NO

The problem is intermittent. GOTO **INTERMITTENT CONDITIONS.**

DIAGNOSTIC TROUBLE CODE (DTC) 31
SOLENOID 1-2/3-4 SHORT TO GROUND OR OPEN

This DTC flashes the CHECK TRANS indicator and sets the BACKUP MODE.

Circuit Description:

- The 1-2/3-4 solenoid is a simple ON/OFF solenoid located in the main case valve body. The solenoid is the normally closed-type. In second or third gear the Transmission Control Module (TCM) energizes the solenoid to open a fluid inlet port. When the port is open, fluid pressure actuates the shift valve.
- The solenoid is activated by a current. This current is produced by applying a voltage to one side (the High side) and a ground to the other side (Low side).
- The High Side Driver (HSD) is a circuit of the TCM that acts as a switch between the solenoids and the supply voltage. The High side of the solenoid is permanently supplied with voltage, except in BACKUP MODE or when ignition is OFF the HSD is turned OFF.
- The TCM continually monitors the solenoid connection to its Low Side Driver (LSD) for either low or high voltage. The LSD is a circuit of the TCM that acts as a switch between the solenoid and ground. When the solenoid is commanded ON the TCM is switching the solenoid to ground.
- There are two tests of the LSD: When the engine is cranked (DTC82) and when the ignition is turned ON (DTC31).
- When the ignition is turned ON, and before the engine is cranked, the TCM activates the shift solenoids (1-2/3-4, 2-3 and Band) to check for short circuits or open circuits. To do so the gear is set to 4th, 3rd, 1st, 1st with band apply, 4th with no HSD. Each one of the 5 tests requires 0.15 second. If the engine is cranked before the end of all tests, the remaining tests are not done.

Diagnostic Aids:

- This Diagnostic is an electrical test done by the TCM.
- Detection conditions:
  - ① The solenoid low side connected to TCM terminal A2 is shorted to ground or open.
  - ② The test is only done when ignition is ON.
  - ③ Engine Speed < 480 RPM (not cranked) and Output Speed = 0 RPM.
  - ④ The conditions need to be present for 0.15 to 1.03 second after ignition switch ON.
- Action after the detection time: BACKUP MODE.
- Recovery conditions: To recover, do an IGNITION CYCLE.

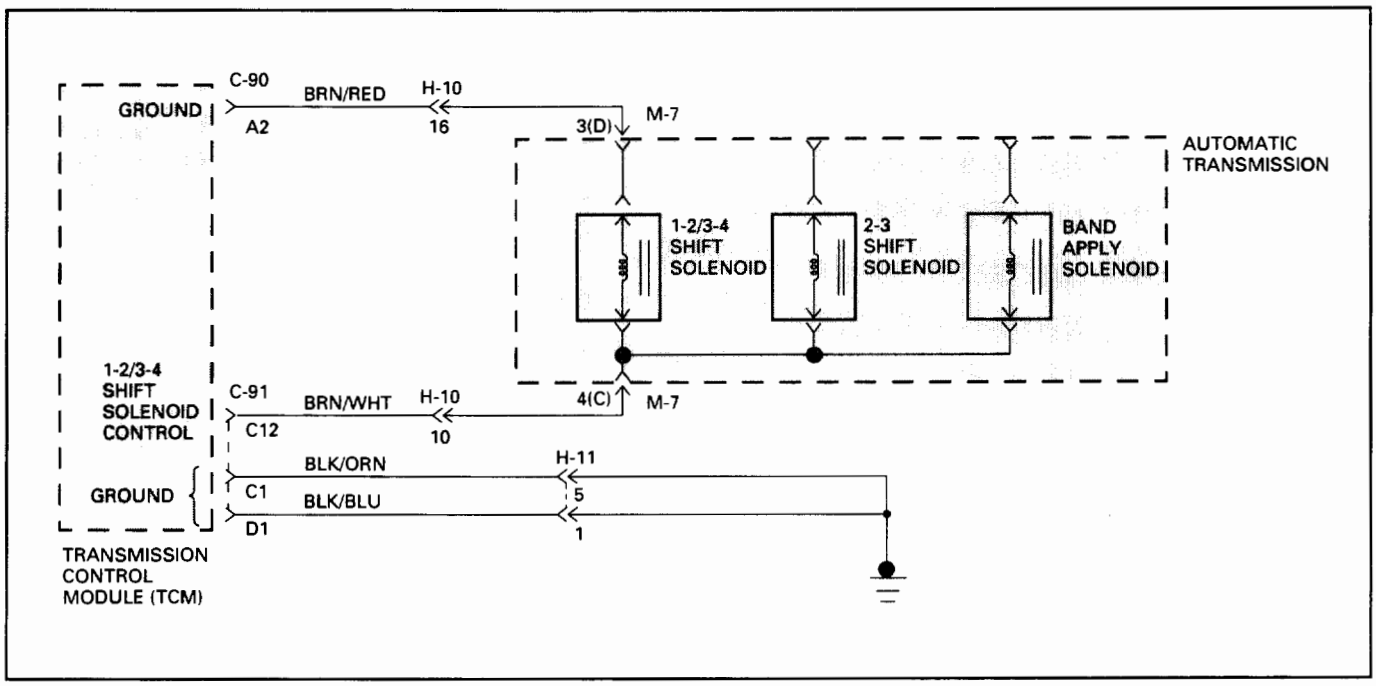

DIAGNOSTIC TROUBLE CODE (DTC) 31
SOLENOID 1-2/3-4 SHORT TO GROUND OR OPEN

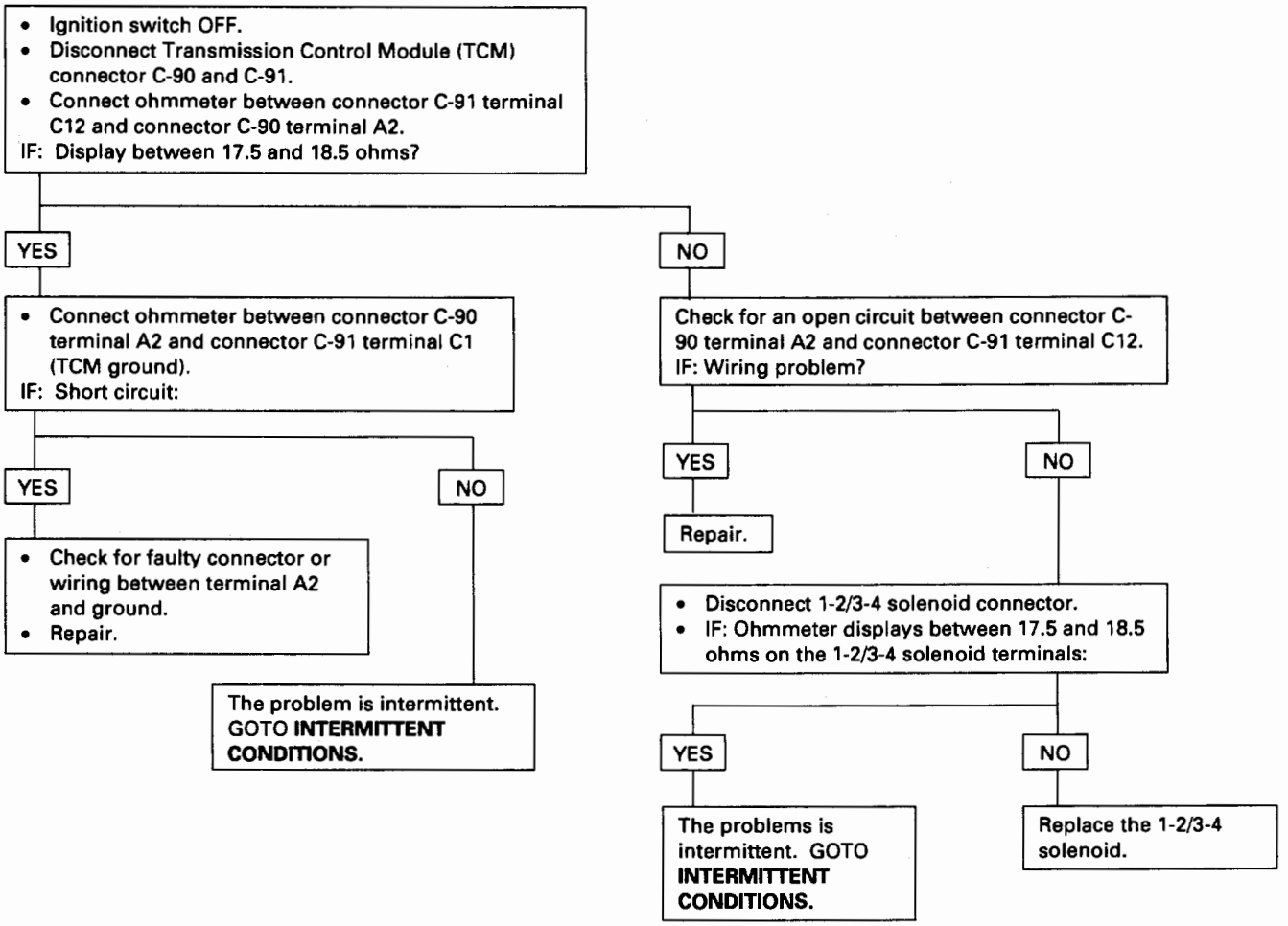

DIAGNOSTIC TROUBLE CODE (DTC) 32
SOLENOID 2-3 SHORT TO GROUND OR OPEN

This DTC flashes the CHECK TRANS indicator and sets the BACKUP MODE.

Circuit Description:

- The 2-3 solenoid is a simple ON/OFF solenoid located in the main case valve body. The solenoid is the normally open-type. When the port is open, fluid pressure actuates the shift valve. In first or second gear the Transmission Control Module (TCM) energizes the solenoid to close a fluid inlet port.
- The solenoid is activated by a current. This current is produced by applying a voltage to one side (the High side) and a ground to the other side (Low side).
- The High Side Driver (HSD) is a circuit of the TCM that acts as a switch between the solenoids and the supply voltage. The High side of the solenoid is permanently supplied with voltage, except in BACKUP MODE or when ignition is OFF the HSD is turned OFF.
- The TCM continually monitors the solenoid connection to its Low Side Driver (LSD) for either low or high voltage. The LSD is a circuit of the TCM that acts as a switch between the solenoid and ground. When the solenoid is commanded ON the TCM is switching the solenoid to ground.
- There are two tests of the LSD: When the engine is cranked (DTC82) and when the ignition is turned ON (DTC32).
- When the ignition is turned ON, and before the engine is cranked, the TCM activates the shift solenoids (1-2/3-4, 2-3 and Band) to check for short circuits or open circuits. To do so the gear is set to 4th, 3rd, 1st, 1st with band apply, 4th with no HSD. Each one of the 5 tests requires 0.15 second. If the engine is cranked before the end of all tests, the remaining tests are not done.

Diagnostic Aids:

- This Diagnostic is an electrical test done by the TCM.
- Detection conditions:
  - ① The solenoid low side connected to TCM terminal A3 is shorted to ground or open.
  - ② The test is only done when ignition is ON.
  - ③ Engine Speed < 480 RPM (not cranked) and Output Speed = 0 RPM.
  - ④ The conditions need to be present for 0.15 to 0.88 second after ignition switch ON.
- Action after the detection time: BACKUP MODE.
- Recovery conditions: To recover, do an IGNITION CYCLE.

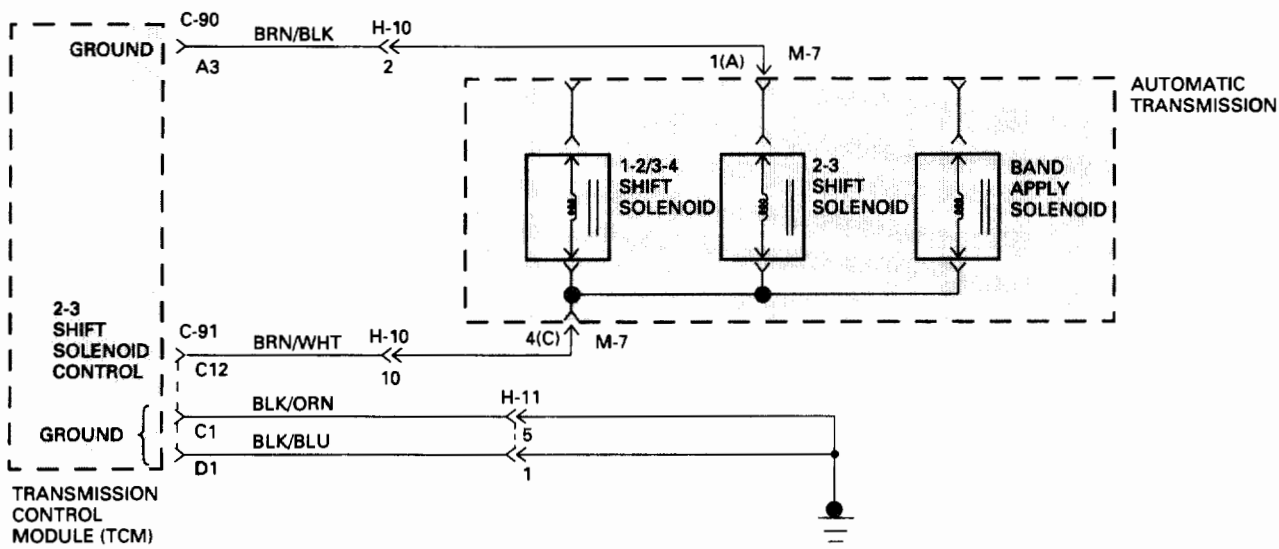

DIAGNOSTIC TROUBLE CODE (DTC) 32
SOLENOID 2-3 SHORT TO GROUND OR OPEN

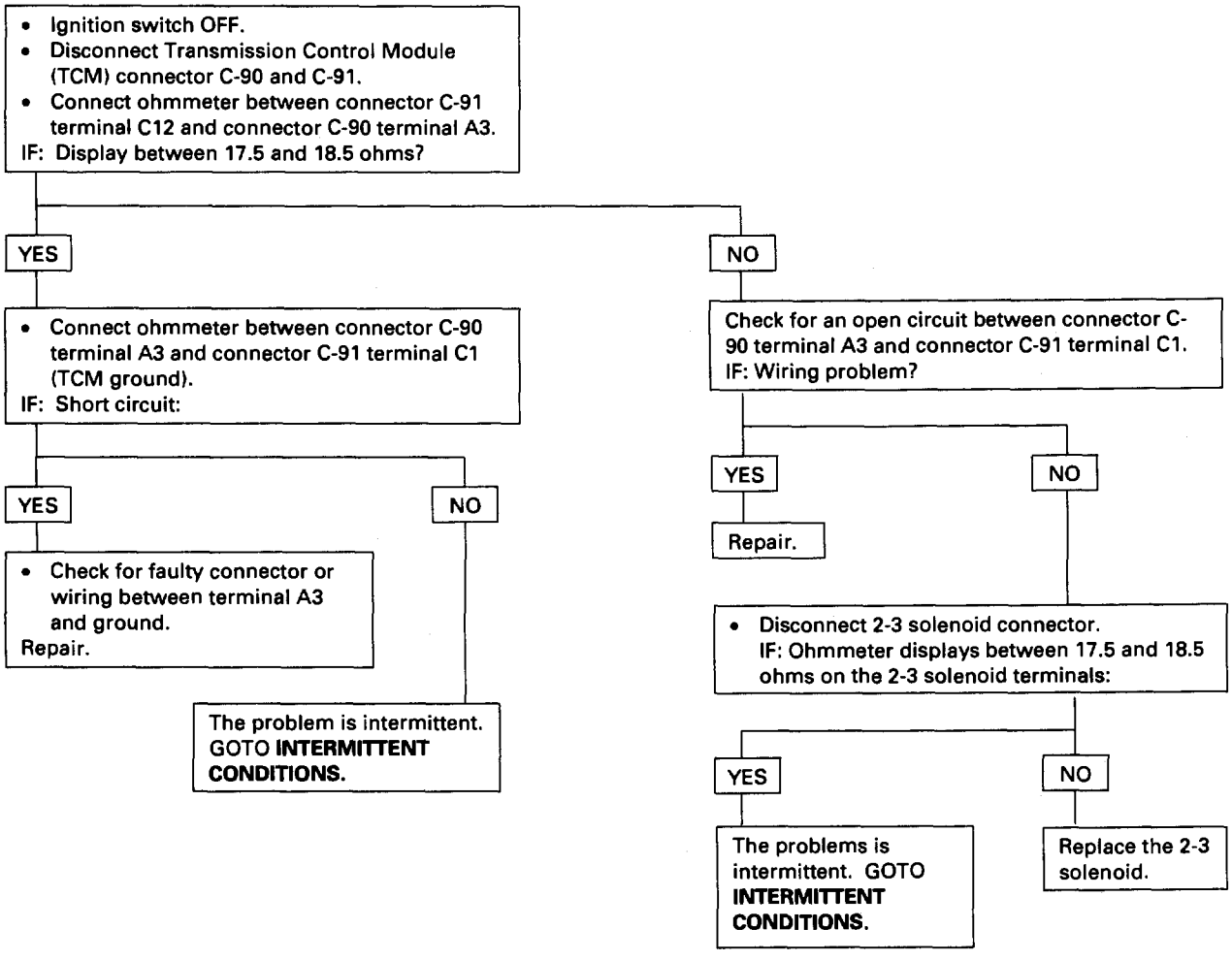

DIAGNOSTIC TROUBLE CODE (DTC) 33
TCC HIGH SHORT TO PLUS OR OPEN

This DTC flashes the CHECK TRANS indicator and does NOT set the BACKUP MODE.

Circuit Description:

- The Torque Converter Clutch (TCC) solenoid is a simple ON/OFF solenoid connected to the adapter case valve body. When the solenoid is energized by the Transmission Control Module (TCM), it opens a fluid port. When the port is open, line pressure actuates the converter clutch control valve which engages the torque converter clutch by exhausting the fluid. The TCM engages the torque converter clutch only when all of the following conditions exist:
  ① The transmission is at operating temperature.
  ② The brake pedal is released.
  ③ The transmission is operating in second, third or fourth gear.
  ④ The engine is warm (more than 70°C).
  ⑤ The shift pattern requests TCC apply.
  ⑥ Shift finished.
  ⑦ No malfunction which will disable the TCC: DTC43, DTC55 (only short to ground).
- The solenoid is activated by a current. This current is produced by applying a voltage to one side (the High side) and a ground to the other side (Low side).
- The High Side Driver (HSD) is a circuit of the TCM that acts as a switch between the solenoid and the supply voltage. The High side of the TCC solenoid is used to turn the TCC ON or OFF because the Low side is permanently connected to the ground of the transmission. In BACKUP MODE or when ignition is turned OFF the TCC High Side is turned OFF.
- The TCM continually monitors the solenoid connection to its High Side Driver for either low or high voltage.
- There is only one test of the HSD for TCC: when the engine is cranked and the TCC is turned OFF.
- If this circuit is shorted to plus, the TCC solenoid is constantly commanded ON (shifts can be firm). In 1st gear the TCC is hydraulically OFF, whatever the TCC solenoid position. This means that the car can be driven even with the TCC shorted to voltage. The engine could stall when the driver is braking strongly, if the car is stopped when the transmission is still in second gear with TCC applied.
  Note: The 3-2 shifts are very firm.

Diagnostic Aids:

- This diagnostic is an electrical test done by the TCM.
- Detection conditions:
  ① The solenoid high side connected to TCM terminal C7 is shorted to voltage or open.
  ② The condition needs to be present for 0.13 second.
- Action after the detection time:
  ① TCC is turned OFF.
  ② CHECK TRANS indicator turned ON.
- Recovery conditions: To recover, do an IGNITION CYCLE.

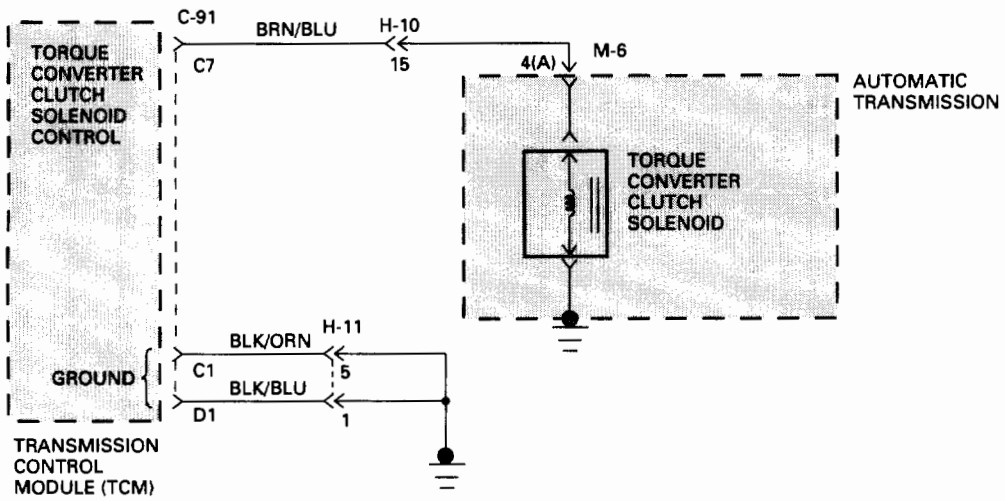

DIAGNOSTIC TROUBLE CODE (DTC) 33
TCC HIGH SHORT TO PLUS OR OPEN

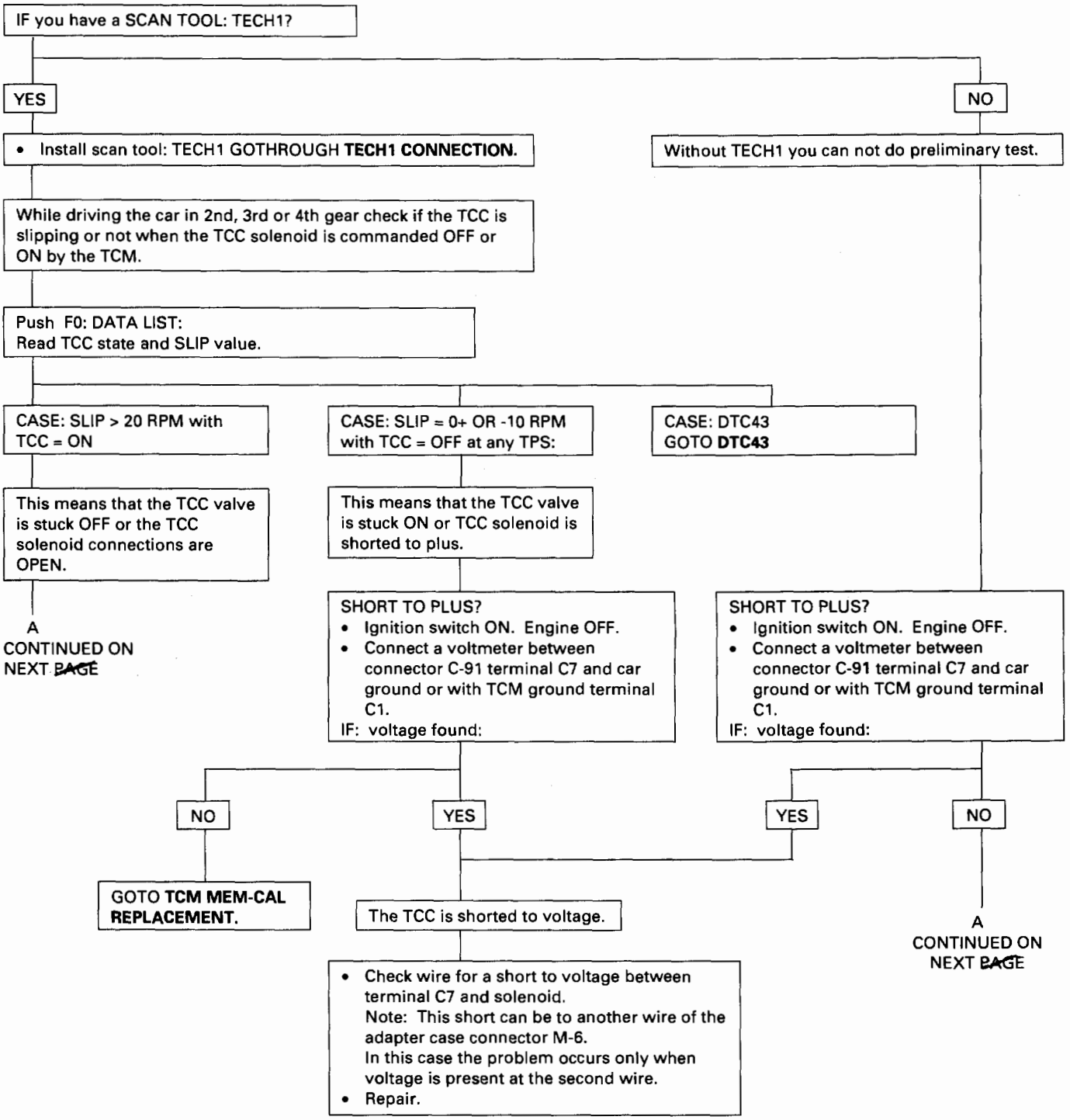

TCC: Torque Converter Clutch
TCM: Transmission Control Module

DIAGNOSTIC TROUBLE CODE (DTC) 33
TCC HIGH SHORT TO PLUS OR OPEN
(CONTINUED)

CONTINUED FROM PREVIOUS PAGE
A

OPEN?
- Ignition switch OFF.
- Disconnect TCM connector C-90 and C-91.
- Connect ohmmeter between connector C-91 terminal C7 and C1 (TCM ground).

IF: Display is between 17.5 and 18.5 ohms.

YES

GOTO **TCM MEM-CAL REPLACEMENT.**

NO

- Disconnect transmission adapter case connector M-6.
- Connect ohmmeter between terminal 4(A) of female half of connector and transmission which is used as ground.

IF: Display between 17.5 and 18.5 ohms:

YES

- Wire between connector C-91 terminal C7 and adapter case connector is open or shorted to another wire.
- Repair.

NO

- Disconnect solenoid connector.
- Connect ohmmeter between the two solenoid terminals.

IF: Display is between 17.5 and 18.5 ohms.

YES

- Wire between adapter case connector and solenoid is open.
- Or wire between transmission (ground) and solenoid is open.
- Repair.

NO

Replace torque converter clutch solenoid.

TCC: Torque Converter Clutch
TCM: Transmission Control Module

MEMO

DIAGNOSTIC TROUBLE CODE (DTC) 34
BAND APPLY SOLENOID SHORT TO GROUND OR OPEN

This DTC flashes the CHECK TRANS indicator and sets the BACKUP MODE.

Circuit Description:

- The band apply solenoid is a normally open solenoid which controls the flow of fluid for brake band application. The Transmission Control Module (TCM) uses Pulse Width Modulation (PWM) and changes the duty cycle to control the solenoid. The TCM turns the solenoid ON (energized) and OFF (de-energized) at a constant frequency. The length of time the solenoid is energized during each ON/OFF cycle is called the pulse width. By varying or "modulating" the pulse width, the solenoid output pressure is changed. Since the solenoid is normally closed, increasing the pulse width increases the duty cycle and decreases the output pressure. PWM control provides smooth band application without an accumulator. The band is only applied in first and second gears.
- In the event of an electrical failure (open), the solenoid regulates at the maximum oil flow (0% duty cycle).
- The solenoid is activated by a current. This current is produced by applying a voltage to one side (the High side) and a ground to the other side (Low side).
- The High Side Driver (HSD) is a circuit of the TCM that acts as a switch between the solenoids and the supply voltage. The High side of the solenoid is permanently supplied with voltage, except in BACKUP MODE or when Ignition is OFF the HSD is turned OFF.
- The TCM continually monitors the splenoid connection to its Low Side Driver (LSD) for either low or high voltage. The LSD is a circuit of the TCM that acts as a switch between the solenoid and ground. When the solenoid is commanded ON the TCM is switching the solenoid to ground.
- There are two tests of the LSD: when the engine is cranked (DTC82) and when the ignition is turned ON (DTC34).
- When the ignition is turned ON, and before the engine is cranked, the TCM activates the shift solenoids (1-2/3-4, 2-3 and Band) to check for short circuits or open circuits. To do so the gear is set to 4th, 3rd, 1st, 1st with band apply, 4th with no HSD. Each one of the 5 tests requires 0.15 second. If the engine is cranked before the end of all tests, the remaining tests are not done.

Diagnostic Aids:

- This diagnostic is an electrical test done by the TCM.
- Detection conditions:
  1. The solenoid Low side connected to TCM terminal A9 is shorted to ground or open.
  2. The test is only done when ignition is ON.
  3. Engine Speed <480 RPM (not cranked) and Output Speed = 0 RPM.
  4. The condition needs to be present for 0.15 to 0.75 second after ignition switch ON.
- Action after the detection time: BACKUP MODE.
- Recovery conditions: To recover, do an IGNITION CYCLE.

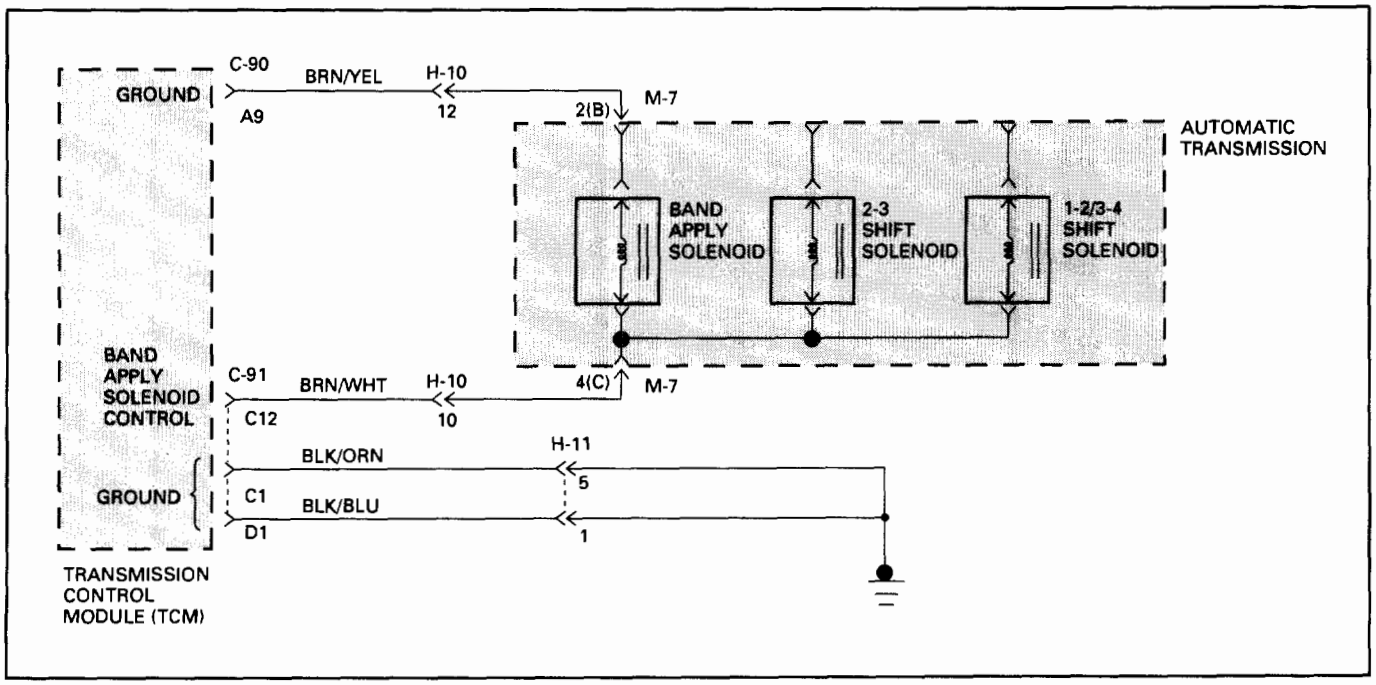

DIAGNOSTIC TROUBLE CODE (DTC) 34
BAND APPLY SOLENOID SHORT TO GROUND OR OPEN

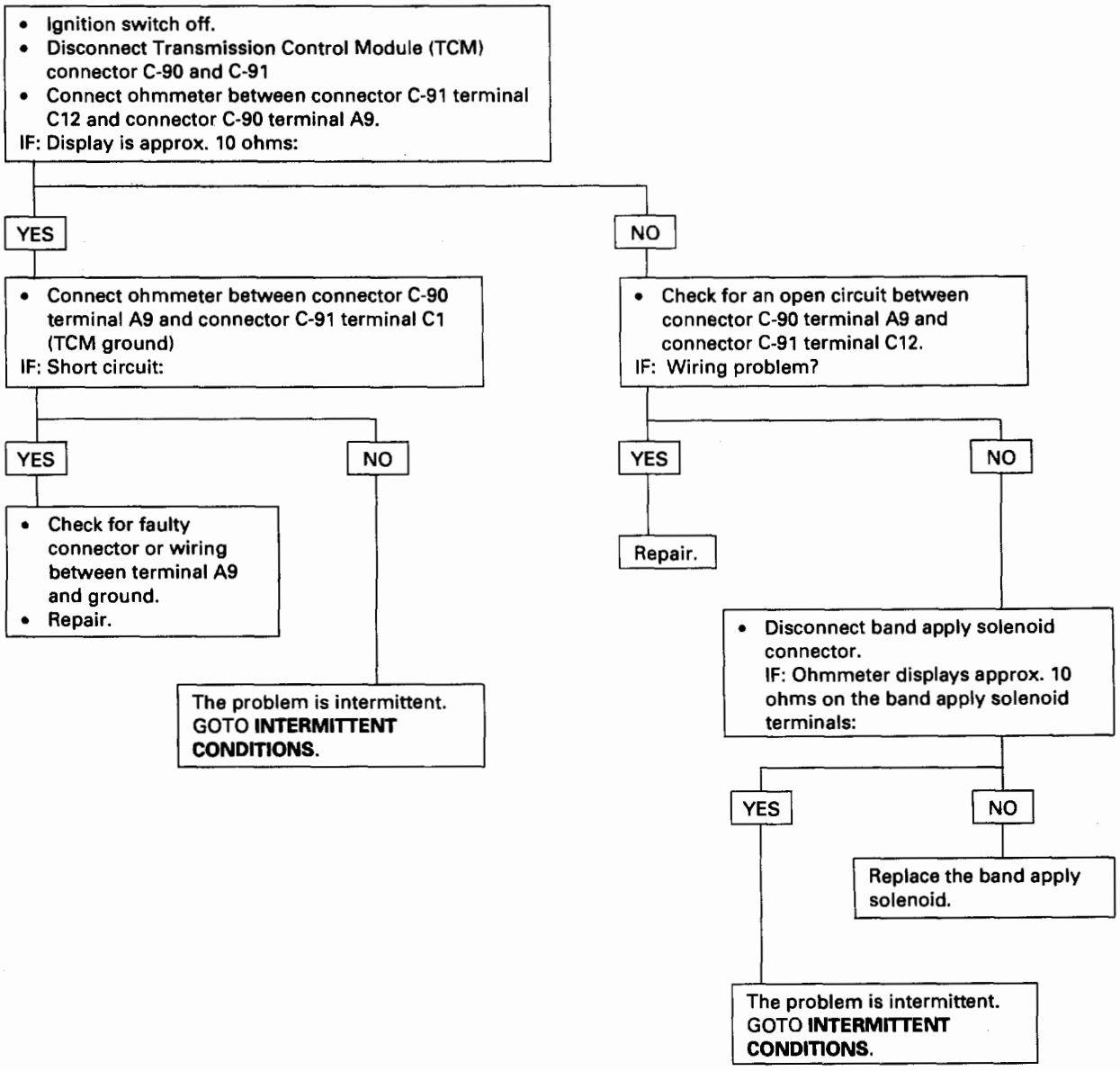

DIAGNOSTIC TROUBLE CODE (DTC) 35
FORCE MOTOR OPEN OR SHORT TO PLUS OR GROUND

This DTC flashes the CHECK TRANS indicator and sets the BACKUP MODE.

Circuit Description:

- The force motor solenoid is a device used to regulate transmission line pressure. The TCM uses TPS information and vehicle speed information to determine the line pressure appropriate for a given load. The TCM will regulate the pressure by applying a varying amperage to the force motor solenoid. The applied amperage can vary from 0.1 to 1.1 amp. The TCM then monitors the amperage at the return line. If the return amperage is more than 0.2 amp from the commanded amperage, the DTC is stored.
- The line pressure can vary from less than 50psi to more than 200 psi. The line pressure varies inversely to the amount of current. High current causes low pressure and low current causes high pressure.

Diagnostic Aids:

- This Diagnostic is an electrical test done by the TCM.
- Detection conditions:
- The TCM monitors the amperage at the return line. When the return amperage is more than 0.2 amp from the commanded amperage, DTC is stored.
- Action after the detection time: BACKUP MODE
- Recovery conditions: To recover, do an IGNITION CYCLE.

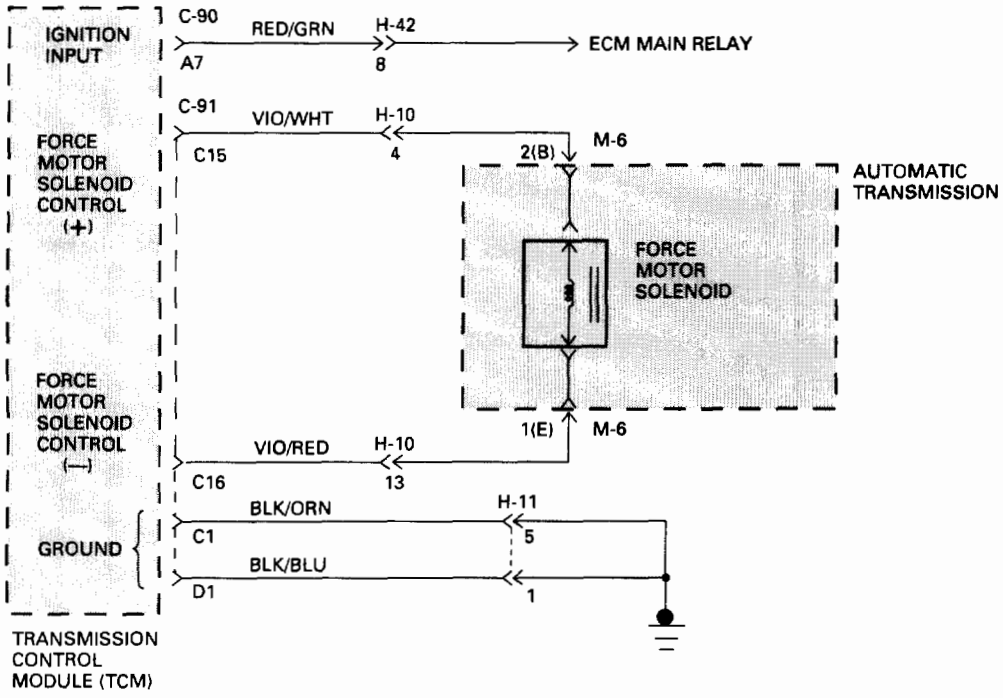

DIAGNOSTIC TROUBLE CODE (DTC) 35
FORCE MOTOR OPEN OR SHORT TO PLUS OR GROUND

- Ignition switch off.
- Disconnect Transmission Control Module (TCM) connector C-90 and C-91
- Connect ohmmeter between connector C-91 terminals C15 and C16.

IF: Display is between 3.7 and 4.7 ohms:

YES

- Connect ohmmeter between connector C-91 terminals C15 and C1 (TCM ground) then between terminal C15 and connecter C-90 terminal A7 (TCM ignition) then between terminals C16 and C1 (TCM ground) then between terminals C16 and A7 (TCM ignition).

IF: Display indicates a short circuit:

YES

Repair the short circuit.

NO

The problem is intermittent. GOTO **INTERMITTENT CONDITIONS.**

NO

- Disconnect automatic transmission adapter case connector M-6.
- Connect ohmmeter between terminals 2(B) and 1(E) of female half of the connector (solenoid side).

IF: Display between 3.7 and 4.7 ohms:

YES

Repair wires for open between terminals C15 or C16 and adapter case connector M-6.

NO

- Disconnect solenoid connector.
- Connect ohmmeter between solenoid terminals.

IF: Display between 3.7 and 4.7 ohms:

YES

Repair wires for open between adapter case connector and solenoid connector.

NO

Replace force motor solenoid.

DIAGNOSTIC TROUBLE CODE (DTC) 36
SHIFT HIGH SHORT TO GROUND OR OPEN

This DTC flashes the CHECK TRANS indicator and sets the BACKUP MODE.

Circuit Description:

- The solenoids are activated by a current. This current is produced by applying a voltage to one side (the High side) and a ground to the other side (Low side).
- The High Side Driver (HSD) is a circuit of the Transmission Control Module (TCM) that acts as a switch between the solenoids and the supply voltage. The High side of the solenoid is permanently supplied with voltage, except in BACKUP MODE or when Ignition is OFF the High Side Driver is turned OFF.
- The TCM continually monitors the solenoid connection to its High Side Driver for either low or high voltage.
- There are two tests of the HSD: when the engine is cranked (DTC82) and when the ignition is turned ON (DTC36).
- When the ignition is turned ON, and before the engine is cranked, the TCM activates the shift solenoids (1-2/3-4, 2-3 and Band) to check for short circuits or open circuits. To do so the gear is set to 4th, 3rd, 1st, 1st with band apply, 4th with no HSD. Each one of the 5 tests requires 0.15 seconds. If the engine is cranked before the end of all tests, the remaining tests are not done.

Diagnostic Aids:

- This diagnostic is an electrical test done by the TCM.
- Detection conditions:
  - ① The solenoid High side connected to TCM terminal C12 is shorted to ground or open.
  - ② The test is only done when ignition is ON.
  - ③ Engine Speed < 480 RPM (not cranked) and Output Speed = 0 RPM
  - ④ The condition needs to be present for 0.15 to 0.75 second after ignition switch ON.
- Action after the detection time: BACKUP MODE.
- Recovery conditions: To recover, do an IGNITION CYCLE.

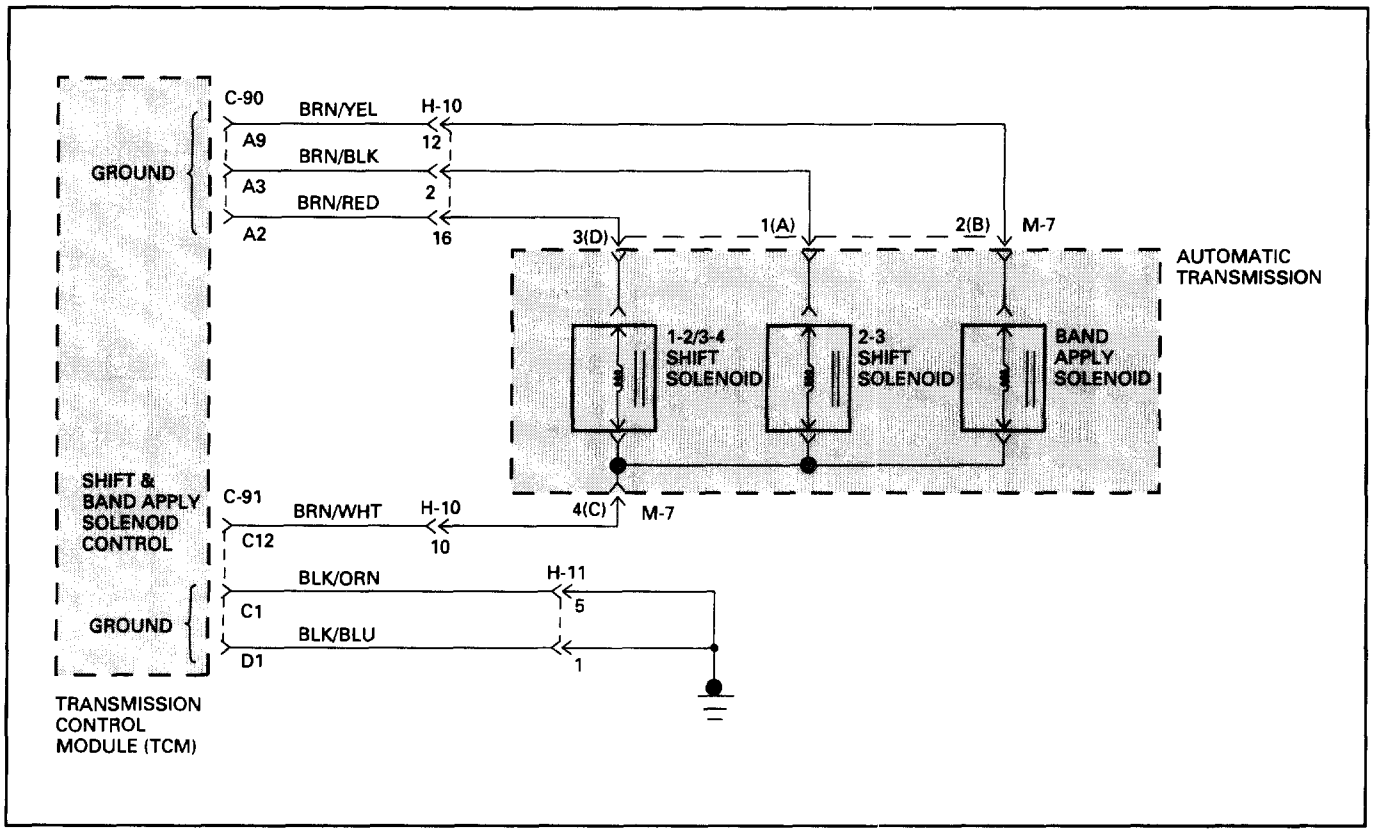

DIAGNOSTIC TROUBLE CODE (DTC) 36
SHIFT HIGH SHORT TO GROUND OR OPEN

- Ignition switch off.
- Disconnect Transmission Control Module (TCM) connectors C-90 and C-91.
- Connect ohmmeter between connector C-91 terminal C12 and connector C-90 terminal A2 and between C12 and A3 and between C12 and A9.

IF: Display is approx. 10 ohms for the band apply and 18 ohms for the other solenoids:

YES

- Connect ohmmeter between connector C-91 terminal C12 and C1 (TCM ground).

IF: Short circuit:

YES

- Check for faulty connector or wiring between terminal C12 and ground.
- Repair.

NO

The problem is intermittent.
GOTO **INTERMITTENT CONDITIONS.**

NO

- Check for an open circuit between connector C-91 terminal C12 and the other terminals A2, A3 and A9.

IF: Wiring problem?

YES

Repair.

NO

The problem is intermittent.
GOTO **INTERMITTENT CONDITIONS.**

DIAGNOSTIC TROUBLE CODE (DTC) 37
TORQUE MANAGEMENT SERIAL LINE FAULTY

This DTC flashes the CHECK TRANS indicator and sets the BACKUP MODE.

Circuit Description:

- Torque Management is a function that decreases the engine torque during transmission shifts. To do so the Transmission Control Module (TCM) exchanges information on a wire with the Engine Control Module (ECM) that governs the Engine. This wire is the Data Link Connector which is also used by the Scan tool to communicate with the TCM and the ECM.

Diagnostic Aids:

- This Diagnostic is not an electrical test done by the TCM but a test between different information ("logic test").
- Detection conditions:
  ① Torque control failure detected
  ② Each time a shift occurs with the Torque Management active, the TCM sends a message to the ECM. If the ECM does not acknowledge this message, the DTC is stored.
- Action after the detection time: BACKUP MODE
- Recovery conditions: To recover, do an IGNITION CYCLE.

NOTE:

① When connecting the TECH1 to the data link connector, be sure to turn off the ignition switch.

② Since the torque management exchanges information between the TCM and the ECM at all times, the DTC37 is sometimes detects in the following condition.
However, this is not an abnormal condition.
- When the engine stops while driving and then it is restarted.
- When the battery voltage goes down excessively and the engine does not start again.

When DTC37 is detected in the above conditions, turn off the ignition switch, correct the abnormal condition and erase the trouble code.

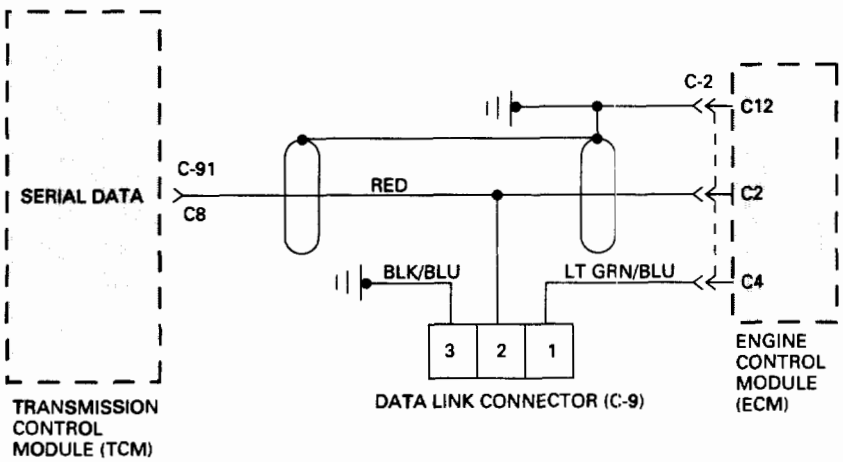

DIAGNOSTIC TROUBLE CODE (DTC) 37
TORQUE MANAGEMENT SERIAL LINE FAULTY

- Peform TECH1 SELF-TEST GOTHROUGH **TECH1 CONNECTION.**

IF: TECH1 OK:

YES

- Ignition switch OFF.
- Disconnect TECH1.
- Connect ohmmeter between connector C-9 terminal 3 and ground.

IF: Display approx. 0 ohms :

YES

- Ignition switch ON.
- Connect voltmeter between Connector C-9 terminal 1 and 3.

IF: Display battery voltage:

YES

- Ignition switch OFF.
- Connect ohmmeter between connector C-9 terminal 2 and ECM connector C-2 terminal C2.
- Then connect ohmmeter between TCM connector C-91 terminal C8 and ECM connector C-2 terminal C2.

IF: Display approx. 0 ohms:

YES

- Check for short between connector C-9 terminal 2 and ground and between terminal 2 and B+.

IF OK, GOTO **TCM MEM-CAL REPLACEMENT.**

NO

See TECH1 OPERATOR'S MANUAL.

NO

Check wire for open.

NO

Check Engine Control Module (ECM) and wire to ECM and connector C-9.

NO

Check wire for open.

DIAGNOSTIC TROUBLE CODE (DTC) 41
SOLENOID 1-2/3-4 SHORT TO PLUS

This DTC flashes the CHECK TRANS indicator and sets the BACKUP MODE.

Circuit Description:

- The 1-2/3-4 solenoid is a simple ON/OFF solenoid located in the main case valve body. The solenoid is the normally closed-type. In second or third gear the Transmission Control Module (TCM) energizes the solenoid to open a fluid inlet port. When the port is open, fluid pressure actuates the shift valve.
- The solenoid is activated by a current. This current is produced by applying a voltage to one side (the High side) and a ground to the other side (Low side).
- The High Side Driver (HSD) is a circuit of the TCM that acts as a switch between the solenoids and the supply voltage. The High side of the solenoid is permanently supplied with voltage, except in BACKUP MODE or when ignition is OFF the HSD is turned OFF.
- The TCM continually monitors the solenoid connection to its Low Side Driver (LSD) for either low or high voltage. The LSD is a circuit of the TCM that acts as a switch between the solenoid and ground. When the solenoid is commanded ON the TCM is switching the solenoid to ground.
- There are two tests of the LSD: when the engine is cranked (DTC82) and when the ignition is turned ON (DTC41).
- When the ignition is turned ON, and before the engine is cranked, the TCM activates the shift solenoids (1-2/2-3, 2-3 and Band) to check for short circuits or open circuits. To do so the gear is set to 4th, 3rd, 1st, 1st with band apply, 4th with no HSD. Each one of the 5 tests requires 0.15 second. If the engine is cranked before the end of all tests, the remaining tests are not done.

Diagnostic Aids:

- This diagnostic is an electrical test done by the TCM.
- Detection conditions:
  - ① The solenoid Low side connected to TCM terminal A2 is shorted to plus.
  - ② The test is only done when ignition is ON.
  - ③ Engine Speed < 480 RPM (not cranked) and Output Speed = 0 RPM.
  - ④ The condition needs to be present for 0.15 to 0.88 second after ignition switch ON.
- Action after the detection time: BACKUP MODE.
- Recovery conditions: To recover, do an IGNITION CYCLE.

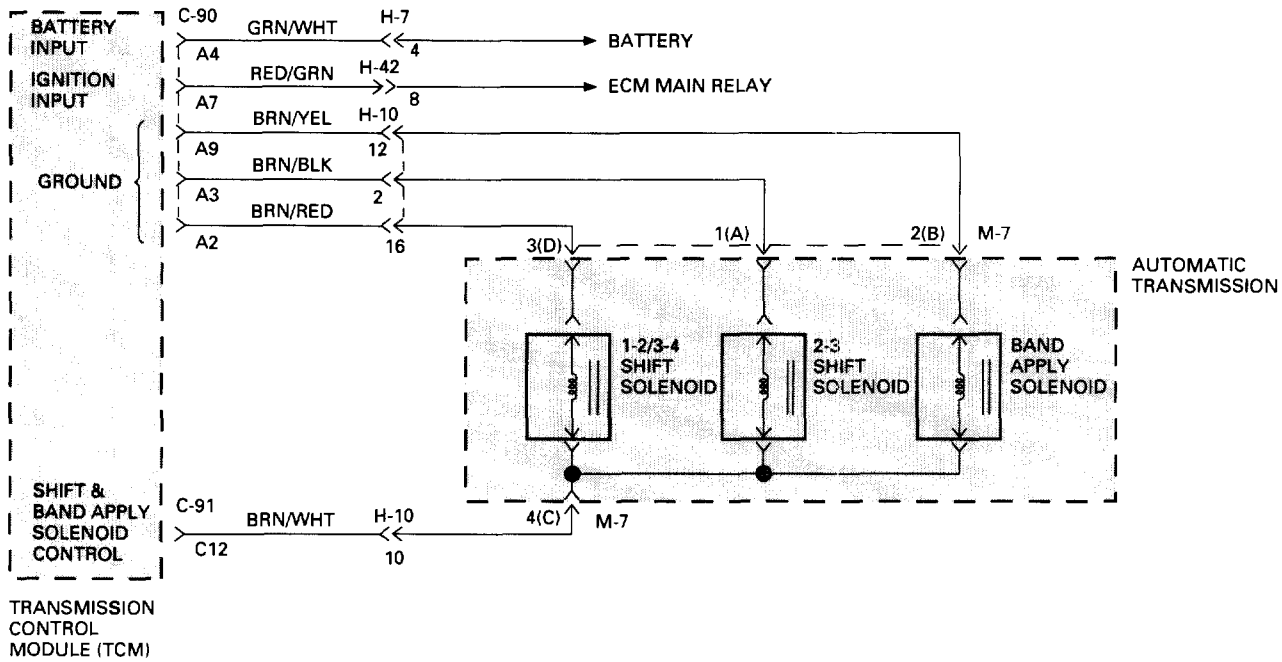

DIAGNOSTIC TROUBLE CODE (DTC) 41
SOLENOID 1-2/3-4 SHORT TO PLUS

- Ignition switch OFF.
- Disconnect Transmission Control Module (TCM) connectors C-90 and C-91.
- Connect ohmmeter between connector C-90 terminals A2 and A7 (TCM ignition) then between A2 and A4 (TCM battery) then between A2 and C12.

IF: Short circuit:

YES

- Check for faulty connector or wiring between terminal A2 and the shorted terminal.
- Repair.

NO

- Connect ohmmeter between A2 and A3 then between A2 and A9.

IF: Short circuit:

YES

Repair.

NO

The problem is intermittent. GOTO **INTERMITTENT CONDITIONS.**

DIAGNOSTIC TROUBLE CODE (DTC) 42
SOLENOID 2-3 SHORT TO PLUS

This DTC flashes the CHECK TRANS indicator and sets the BACKUP MODE.

Circuit Description:

- The 2-3 solenoid is a simple ON/OFF solenoid located in the main case valve body. The solenoid is the normally open-type. When the port is open, fluid pressure actuates the shift valve. In first or second gear the Transmission Control Module (TCM) energizes the solenoid to close a fluid inlet port.
- The solenoid is activated by a current. This current is produced by applying a voltage to one side (the High side) and a ground to the other side (Low side).
- The High Side Driver (HSD) is a circuit of the TCM that acts as a switch between the solenoids and the supply voltage. The High side of the solenoid is permanently supplied with voltage, except in BACKUP MODE or when ignition is OFF the HSD is turned OFF.
- The TCM continually monitors the solenoid connection to its Low Side Driver (LSD) for either low or high voltage. The LSD is a circuit of the TCM that acts as a switch between the solenoid and ground. When the solenoid is commanded ON the TCM is switching the solenoid to ground.
- There are two tests of the LSD: when the engine is cranked (DTC82) and when the ignition is turned ON (DTC42).
- When the ignition is turned ON, and before the engine is cranked, the TCM activates the shift solenoids (1-2/2-3, 2-3 and Band) to check for short circuits or open circuits. To do so the gear is set to 4th, 3rd, 1st, 1st with band apply, 4th with no HSD. Each one of the 5 tests requires 0.15 second. If the engine is cranked before the end of all tests, the remaining tests are not done.

Diagnostic Aids:

- This diagnostic is an electrical test done by the TCM.
- Detection conditions:
  - ① The solenoid Low side connected to TCM terminal A3 shorted to plus.
  - ② The test is only done when ignition is ON.
  - ③ Engine Speed < 480 RPM (not cranked) and Output Speed = 0 RPM.
  - ④ The condition needs to be present for 0.15 to 1.03 second after ignition switch ON.
- Action after the detection time: BACKUP MODE.
- Recovery conditions: To recover, do an IGNITION CYCLE.

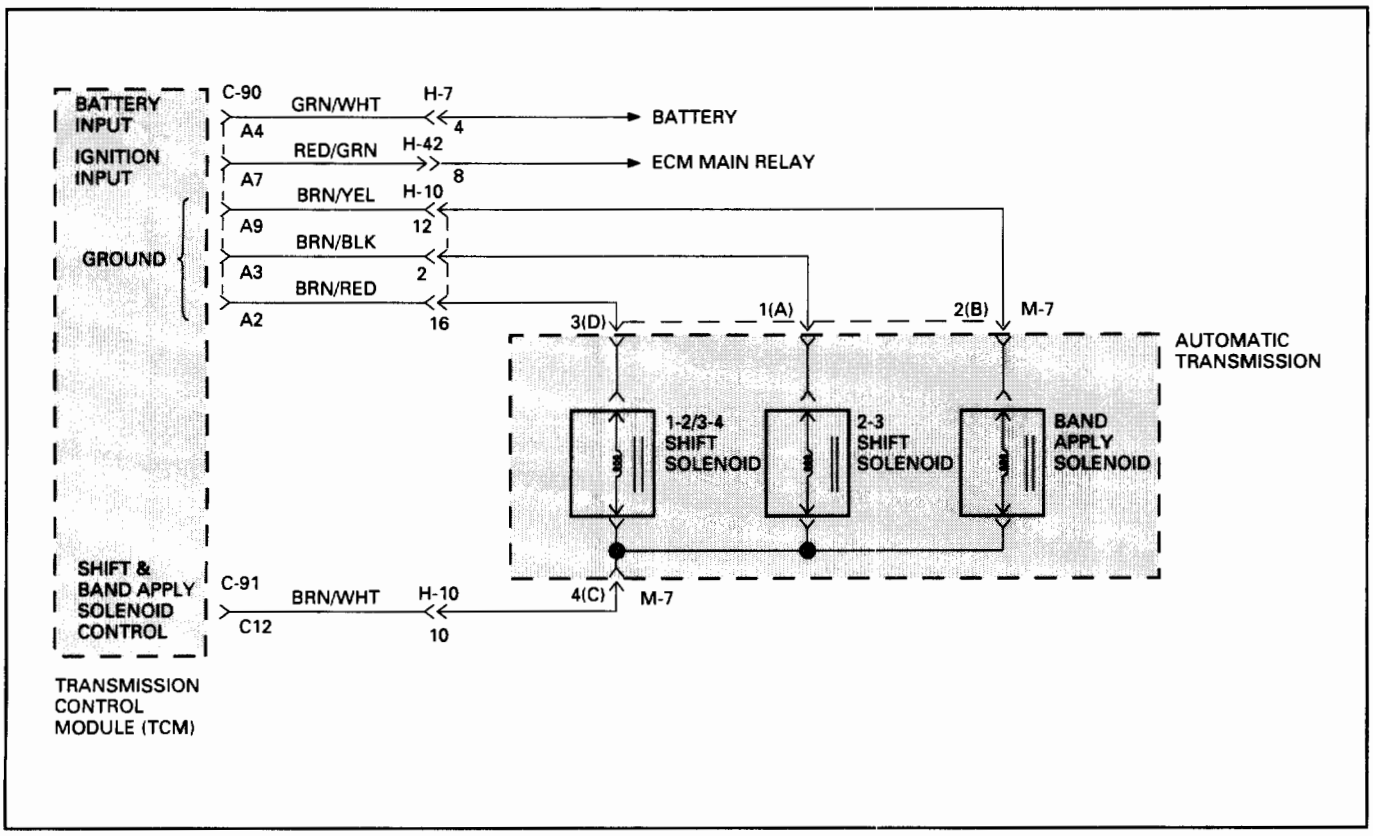

DIAGNOSTIC TROUBLE CODE (DTC) 42
SOLENOID 2-3 SHORT TO PLUS

- Ignition switch OFF.
- Disconnect Transmission Control Module (TCM) connectors C-90 and C-91.
- Connect ohmmeter between connector C-90 terminals A3 and A7 (TCM ignition) then between A3 and A4 (TCM battery) then between A3 and C12.

IF: Short circuit:

YES

- Check for faulty connector or wiring between terminal A3 and the shorted terminal.
- Repair.

NO

- Connect ohmmeter between A3 and A2 then between A3 and A9.

IF: Short circuit:

YES

Repair.

YES

The problem is intermittent. GOTO **INTERMITTENT CONDITIONS.**

DIAGNOSTIC TROUBLE CODE (DTC) 43
TCC HIGH SHORT TO GROUND

This DTC does NOT flash the CHECK TRANS indicator and does NOT set the BACKUP MODE.

Circuit Description:

- The Torque Converter Clutch (TCC) solenoid is a simple ON/OFF solenoid connected to the adapter case valve body. When the solenoid is energized by the Transmission Control Module (TCM), it opens a fluid port. When the port is open, line pressure actuates the converter clutch control valve which engages the torque converter clutch by exhausting the fluid. The TCM engages the torque converter clutch only when all of the following conditions exist:
  1. The transmission is at operating temperature.
  2. The brake pedal is released.
  3. The transmission is operating in second, third or fourth gear.
  4. The engine is warm (more than 70°C).
  5. The shift pattern requests TCC apply.
  6. Shift finished.
  7. No malfunction which will disable the TCC: DTC33, DTC55 (only short to ground).
- The solenoid is activated by a current. This current is produced by applying a voltage to one side (the High side) and a ground to the other side (Low side).
- The High Side Driver (HSD) is a circuit of the TCM that acts as a switch between the solenoid and the supply voltage. The High side of the TCC solenoid is used to turn the TCC ON or OFF because the Low side is permanently connected to the ground of the transmission. In BACKUP MODE or when ignition OFF the TCC High Side is turned OFF.
- The TCM continually monitors the solenoid connection of to its High Side Driver for either low or high voltage.
- There is only one test of the HSD for TCC: when the engine is cranked and the TCC is turned ON.

Diagnostic Aids:

- This diagnostic is an electrical test done by the TCM.
- Detection conditions:
  1. The solenoid High side connected to TCM terminal C7 is shorted to ground.
  2. The condition needs to be present for 0.07 seconds after ignition switch ON.
- Action after the detection time: TCC is turned OFF.
- Recovery conditions: To recover, do an IGNITION CYCLE.

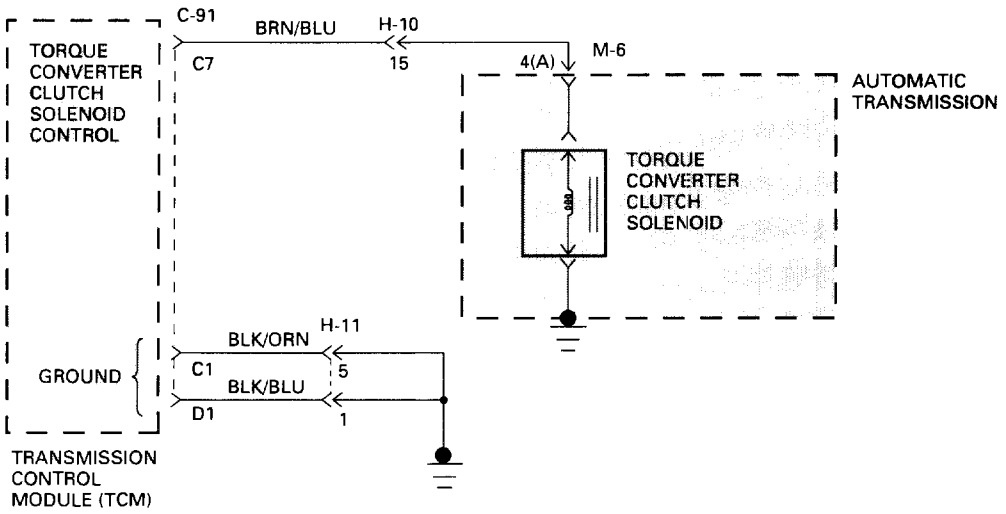

DIAGNOSTIC TROUBLE CODE (DTC) 43
TCC HIGH SHORT TO GROUND

IF you have a SCAN TOOL: TECH1?

YES

- Install scan tool: TECH1 GOTHROUGH **TECH1 CONNECTION.**

While driving the car in 2nd, 3rd or 4th gear check if the TCC is slipping or not when the TCC solenoid is commanded ON by the TCM.

Push F0: DATA LIST:
Read TCC state and SLIP value.

CASE: SLIP > 20 RPM with TCC = ON

This means that the TCC valve is stuck OFF or the TCC solenoid connections are shorted to ground.

CASE: DTC 33
GOTO **DTC 33.**

NO

Without TECH1 you can not do preliminary test.

SHORT TO GROUND?
- Ignition switch OFF. Engine OFF.
- Disconnect Transmission Control Module (TCM) connectors C-90 and C-91.
- Connect a ohmmeter between connector C-91 terminal C7 and car ground or with TCM ground terminal C1.

IF: Short circuit:

YES

The TCC is shorted to ground.

- Check wiring between terminal C7 and ground.
- Repair.

NO

The problem is intermittent.
GOTO **INTERMITTENT CONDITIONS.**

TCC: Torque Converter Clutch
TCM: Transmission Control Module

DIAGNOSTIC TROUBLE CODE (DTC) 44
BAND APPLY SOLENOID SHORT TO PLUS

This DTC flashes the CHECK TRANS indicator and sets the BACKUP MODE.

Circuit Description:

- The band apply solenoid is a normally open solenoid which controls the flow of fluid for brake band application. The Transmission Control Module (TCM) uses Pulse Width Modulation (PWM) and changes the duty cycle to control the solenoid. The TCM turns the solenoid ON (energized) and OFF (de-energized) at a constant frequency. The length of time the solenoid is energized during each ON/OFF cycle is called the pulse width. By varying or "modulating" the pulse width, the solenoid output pressure is changed. Since the solenoid is normally closed, increasing the pulse width increases the duty cycle and decreases the output pressure. PWM control provides smooth band application without an accumulator. The band is only applied in first and second gears.
- In the event of an electrical failure (open), the solenoid regulates at the maximum oil flow (0% duty cycle).
- The solenoid is activated by a current. This current is produced by applying a voltage to one side (the High side) and a ground to the other side (Low side).
- The High Side Driver (HSD) is a circuit of the TCM that acts as a switch between the solenoids and the supply voltage. The High side of the solenoid is permanently supplied with voltage, except in BACKUP MODE or when ignition is OFF the HSD is turned OFF.
- The TCM continually monitors the solenoid connection to its Low Side Driver (LSD) for either low or high voltage. The LSD is a circuit of the TCM that acts as a switch between the solenoid and ground. When the solenoid is commanded ON the TCM is switching the solenoid to ground.
- There are two tests of the LSD: when the engine is cranked (DTC82) and when the ignition is turned ON (DTC44).
- When the ignition is turned ON, and before the engine is cranked, the TCM activates the shift solenoids (1-2/3-4, 2-3 and Band) to check for short circuits or open circuits. To do so the gear is set to 4th, 3rd, 1st, 1st with band apply, 4th with no HSD. Each one of the 5 tests requires 0.15 second. If the engine is cranked before the end of all tests, the remaining tests are not done.

Diagnostic Aids:

- This diagnostic is an electrical test done by the TCM.
- Detection conditions:
  - ① The solenoid Low side connected to TCM terminal A9 is shorted to voltage.
  - ② The test is only done when ignition is ON.
  - ③ Engine Speed < 480 RPM (not cranked) and Output Speed = 0 RPM.
  - ④ The condition needs to be present for 0.15 to 1.18 second after ignition switch ON.
- Action after the detection time: BACKUP MODE.
- Recovery conditions: To recover, do an IGNITION CYCLE.

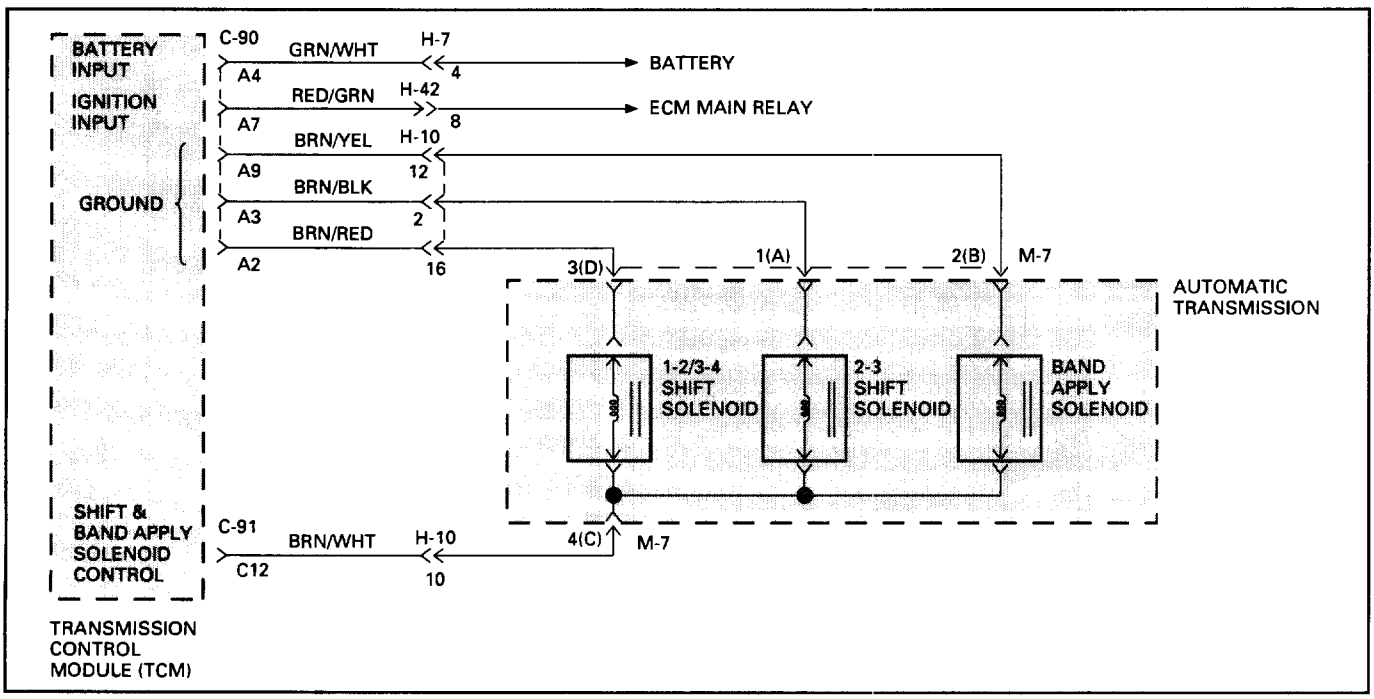

DIAGNOSTIC TROUBLE CODE (DTC) 44
BAND APPLY SOLENOID SHORT TO PLUS

- Ignition switch OFF.
- Disconnect Transmission Control Module (TCM) connectors C-90 and C-91.
- Connect ohmmeter between connector C-90 terminals A9 and A7 (TCM ignition) then between A9 and A4 (TCM battery) then between A9 and C12.

IF: Short circuit:

YES

- Check for faulty connector or wiring between terminal A9 and the shorted terminal.

Repair.

NO

- Connect ohmmeter between A9 and A2 then between A9 and A3.

IF: Short circuit:

YES

Repair.

NO

The problem is intermittent. GOTO **INTERMITTENT CONDITIONS.**

DIAGNOSTIC TROUBLE CODE (DTC) 46
SHIFT HIGH SHORT TO PLUS

This DTC flashes the CHECK TRANS indicator and sets the BACKUP MODE.

Circuit Description:

- The solenoids are activated by a current. This current is produced by applying a voltage to one side (the High side) and a ground to the other side (Low side).
- The High Side Driver (HSD) is a circuit of the Transmission Control Module (TCM) that acts as a switch between the solenoids and the supply voltage. The High side of the solenoid is permanently supplied with voltage, except in BACKUP MODE or when ignition is OFF the High Side Driver is turned OFF.
- The TCM continually monitors the solenoid connection to its High Side Driver for either low or high voltage.
- There are two tests of the HSD: when the engine is cranked (DTC82) and when the ignition is turned ON (DTC46).
- When the ignition is turned ON, and before the engine is cranked, the TCM activates the shift solenoids (1-2/3-4, 2-3 and Band) to check for short circuits or open circuits. To do so the gear is set to 4th, 3rd, 1st, 1st with band apply, 4th with no HSD. Each one of the 5 tests requires 0.15 second. If the engine is cranked before the end of all tests, the remaining tests are not done.

Diagnostic Aids:

- This diagnostic is an electrical test done by the TCM.
- Detection conditions:
  - ① The solenoid High side connected to TCM terminal C12 is shorted to voltage.
  - ② The test is only done when ignition is ON.
  - ③ Engine Speed < 480 RPM (not cranked) and Output Speed = 0 RPM.
  - ④ The condition needs to be present for 0.15 to 1.34 second after ignition switch ON.
- Action after the detection time: BACKUP MODE.
- Recovery conditions: To recover, do an IGNITION CYCLE.

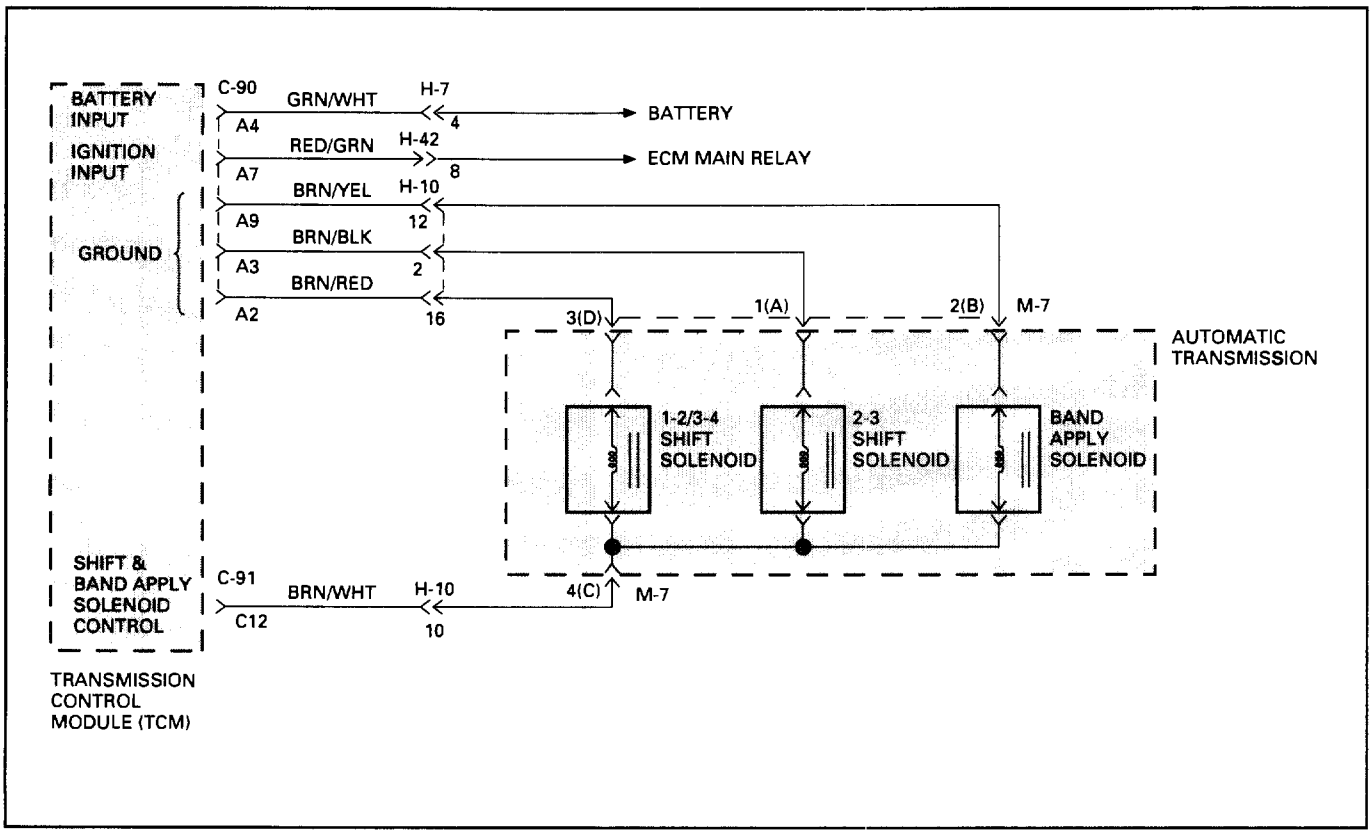

DIAGNOSTIC TROUBLE CODE (DTC) 46
SHIFT HIGH SHORT TO PLUS

- Ignition switch OFF.
- Disconnect Transmission Control Module (TCM) connectors C-90 and C-91.
- Connect ohmmeter between connector C-91 terminal C12 and connector C-90 terminal A7 (TCM ignition) then between C12 and A4 (TCM battery).

IF: Short circuit:

YES

- Check for faulty connector or wiring between terminal C12 and the shorted terminal.

Repair.

NO

The problem is intermittent.
GOTO **INTERMITTENT CONDITIONS.**

DIAGNOSTIC TROUBLE CODE (DTC) 51
ENGINE COOLANT SWITCH SHORT TO GROUND, PLUS OR OPEN

This DTC does NOT flash the CHECK TRANS indicator and does NOT set the BACKUP MODE.

Circuit Description:

- The Engine Coolant Temperature is measured by a sensor in the coolant system. This information is used by the Engine Control Module (ECM) for the engine. The ECM provides the information: Engine Warm to the Transmission Control Module (TCM) when the ECM measures a temperature higher than 70°C (158°F).
- The information is provided using a wire between the ECM terminal A9 and the TCM terminal D14. When the engine is warm the ECM connects its terminal A9 to ground using a Low Side Driver. When the engine is Cold the ECM lets this wire open and the TCM pulls it up to 5 volts.
- When Ignition is ON and Engine is OFF: the ECM always sends the information "engine cold" even if the engine is warm. The information is valid only when the engine is ON.

Diagnostic Aids:

- This Diagnostic is not an electrical test done by the TCM but a test between different information ("logic test").
- Detection conditions of engine always cold:
  ① Engine seen as cold: wire short to voltage or open.
  ② Transrnission Oil Temperature >150°C (302°F) or more than 20 minutes since last ignition cycle.
  ③ Detection conditions need to be present for at least 25 seconds.
- Detection conditions of engine always warm:
  ① Engine seen as warm: wire short to ground.
  ② Transrnission Oil Temperature < 0°C (32°F).
  ③ Without problem on Transmission Temperature sensor then: voltage on A/T Oil Temperature sensor <4.74 V.
  ④ Detection conditions need to be present for at least 6 seconds.
- Action after the detection time: No action.
- Recovery conditions: To recover, Engine Coolant Temperature change information need to be present for more than 6 seconds.

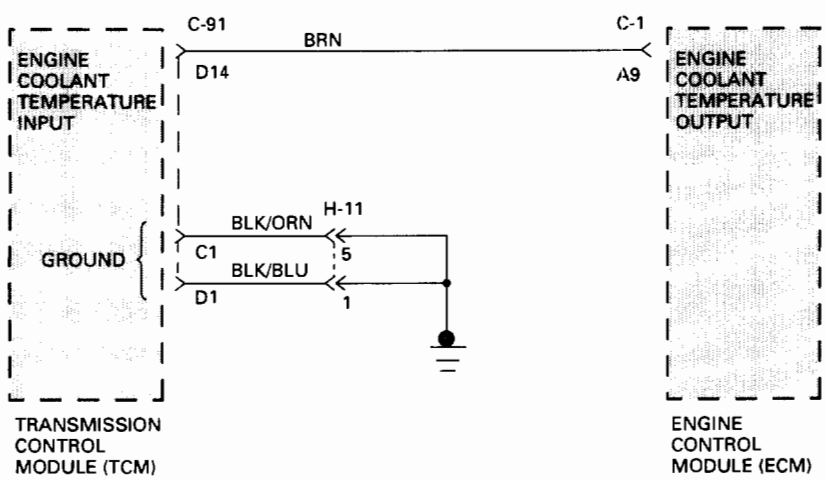

DIAGNOSTIC TROUBLE CODE (DTC) 51

ENGINE COOLANT SWITCH SHORT TO GROUND, PLUS OR OPEN

- This DTC can be set when there is no problem at all. This is due to the fact that when the engine stalls the ignition is still ON then Engine Control Module (ECM) provides a false information: engine cold. The Transmission Control Module (TCM), knowing that the last ignition cycle happened more than 20 minutes ago, then sets DTC51.
- Using the Scan Tool you can check with TECH1: F0: ENG. TEMP. SW information. When the engine is cold or when the engine is OFF the TECH1 should show: COLD. When the engine is warm the TECH1 should show WARM.
- This DTC is not very important. In the worst case it would not allow the Torque Converter Clutch (TCC) to be applied. This will cause low fuel economy.

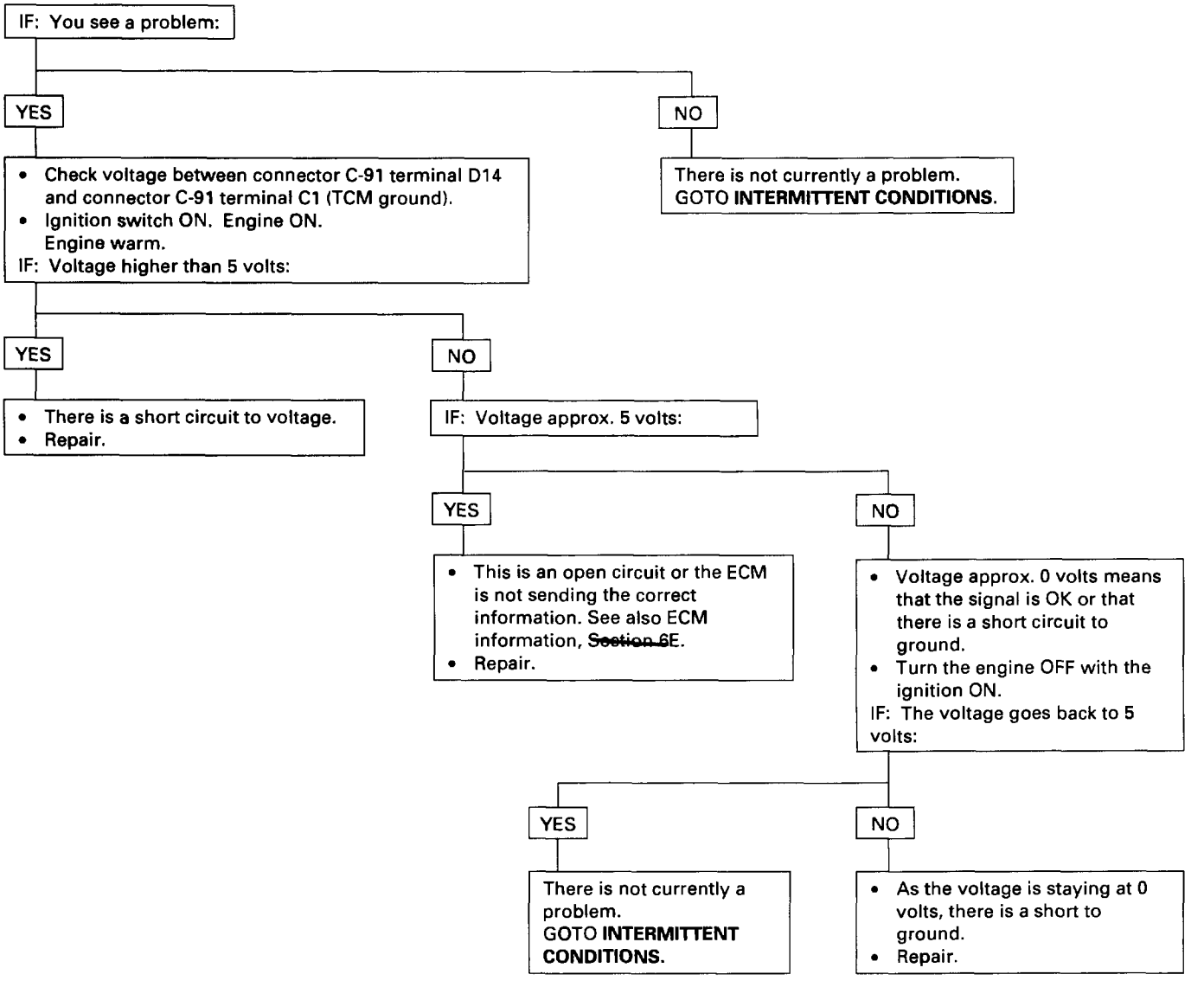

DIAGNOSTIC TROUBLE CODE (DTC) 52
KICK DOWN ALWAYS ON OR SHORT TO GROUND

This DTC does NOT flash the CHECK TRANS indicator and does NOT set the BACKUP MODE.

Circuit Description:
- When the driver presses the accelerator pedal down fully, the kick down switch closes, sending a ground signal to the Transmission Control Module (TCM).
- This information is used to do shifts with a high Engine Speed RPM.
- When the kick down switch is closed the Throttle Position Sensor (TPS) is already at 100%.

Diagnostic Aids:
- This diagnostic is not an electrical test done by the TCM but a test between different information ("logic test").
- Detection conditions:
  ① Kick down switch ON (short to ground) and TPS <70%.
  ② No malfunction: TPS short to voltage or ground (DTC21 and DTC22).
  ③ The conditions need to be present for at least 1 second.
- Action after the detection time: Kick Down information not taken into account.
- Recovery conditions: To recover, Kick Down needs to be seen as OFF during detection time.

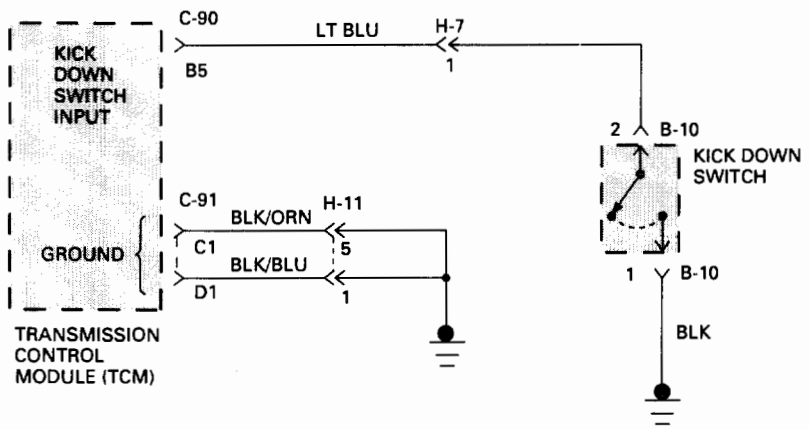

DIAGNOSTIC TROUBLE CODE (DTC) 52
KICK DOWN ALWAYS ON OR SHORT TO GROUND

IF: DTC 23 Throttle Position Sensor (TPS) connector open too:

- YES → GOTO **DTC 23.**
- NO →
  - Ignition switch ON. Engine OFF.
  - Accelerator pedal not depressed.
  - Connect a voltmeter between connector C-90 terminal B5 and connector C-91 terminal C1 (TCM ground).

  IF: Display approx. 0 volts:
  - YES →
    - Check the wires and connector and the switch to detect the short to ground.
    - Repair.
  - NO → The problem is intermittent. GOTO **INTERMITTENT CONDITIONS.**

DIAGNOSTIC TROUBLE CODE (DTC) 53
MODE SWITCH IN P OR N OR R BAD POSITION

This DTC does NOT flash the CHECK TRANS indicator and does NOT set the BACKUP MODE.

Circuit Description:

- The mode switch supplies the Transmission Control Module (TCM) with information regarding the selector lever position: P, R, N, D, 3, 2 or L. The selector lever position is indicated by the state of four ON/OFF contacts. The mode switch is located on one side of the transmission. It is on the transmission manual shaft and is fixed to the main case.
- The mode switch is also used to provide the information P or N to the engine crank wiring. The engine can be cranked only if connector C-43 terminal 4(H) is connected to terminal 1(E), which is connected to ground.
- The mode switch is also used to provide the back up lamp power in reverse. This is the reason why the mode switch is supplied through a 15A fuse (C-3). This fuse can burn due to short circuit in the back up lamp.
- When this fuse is open, the mode switch does not work and DTC54 is set.
- The mode position is defined by the shift linkage which is a link between the shift lever and the mode switch. A bad adjustment of the shift linkage can create a mode switch problem (DTC53).

Diagnostic Aids:

- This Diagnostic is not an electrical test done by the TCM but a test between different information ("logic test").
- Detection conditions of P or N bad position:
  ① A/T Input Speed <3000 RPM
  ② TPS > 20%
  ③ Mode Switch = P or N
  ④ No malfunction: TPS short to voltage or ground (DTC21, DTC22), Engine Speed (DTC13).
  ⑤ The conditions need to be present for at least 4 seconds.
- Action after the detection time: Default position assumed for pressure calculation and shift pattern = always in D.
- Recovery Conditions: To recover, have the engine speed higher than 3000 RPM with a TPS higher than 20% when the mode switch is not in P or N.
- Detection conditions of R bad position:
  ① A/T Output Speed > approx. 100 KPH
  ② Mode Switch = R
  ③ No malfunction: Output speed (DTC11). Downshift Protection (DTC62).
  ④ The conditions need to be present for at least 4 seconds.
- Action after the detection time: Default position assumed for pressure calculation and shift pattern = always in D.
- Recovery conditions: To recover, have the output speed higher than 100 KPH when the mode switch is not R.

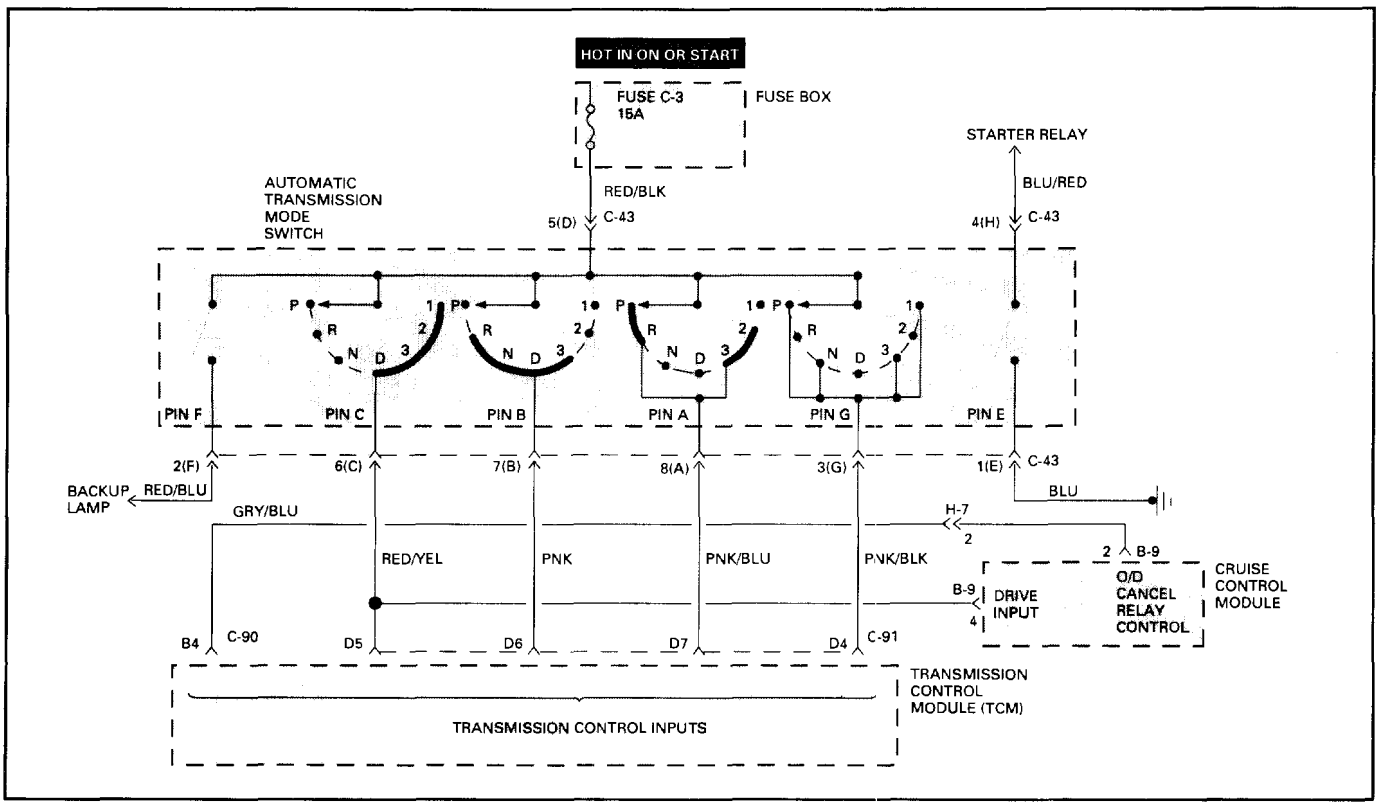

DIAGNOSTIC TROUBLE CODE (DTC) 53
MODE SWITCH IN P OR N OR R BAD POSITION

IF: DTC 23 Throttle Position Sensor (TPS) connector open or DTC 13 Engine speed, DTC 54 Mode switch illegal position exists:

- YES → GOTO **DTC13** or **DTC23** or **DTC 54** first.
- NO →
  - Install scan tool GOTHROUGH **TECH1 CONNECTION.**
  - Ignition switch ON. Engine running.
  - Selector lever position "P".
  - Select F0: DATALIST: "TOP SIGNAL" or F0: DATA LIST: "AT INPUT SPEED".

  IF: Display does not change with engine speed or TPS:
  - YES → DTC 23 or DTC 13 not detected but are the reason for this DTC 53. GOTO **DTC13** or **DTC23**.
  - NO →
    - Ignition switch ON.
    - Select F0: DATALIST: "SELECTOR POS.".
    - Move shift selector lever through all positions and compare results with table 1.

    IF: all selector pin displays correct:
    - YES → The problem is intermittent. GOTO **INTERMITTENT CONDITIONS.**
    - NO →
      - Check automatic transmission mode switch adjustment. GOTHROUGH MODE SWITCH SETTING PROCEDURE (~~PAGE: 7A-157~~)
      - Repair.

Table 1

	SHIFT SELECTOR POSITION						
TECH1 DISPLAY	P	R	N	D	3	2	L
SELECTOR PIN A	X	X			X	X	
SELECTOR PIN B		X	X	X	X		
SELECTOR PIN C				X	X	X	X
SELECTOR PIN P	X		X		X		X

Note: "X" indicates TECH1 displays "ACTIVE".

DIAGNOSTIC TROUBLE CODE (DTC) 54
MODE SWITCH ILLEGAL POSITION

This DTC flashes the CHECK TRANS indicator and sets the BACKUP MODE.

Circuit Description:

- The mode switch supplies the Transmission Control Module (TCM) with information regarding the selector lever position: P, R, N, D, 3, 2 or L. The selector lever position is indicated by the state of four ON/OFF contacts. The mode switch is located on one side of the transmission. It is on the transmission manual shaft and is fixed to the main case.
- The mode switch is also used to provide the information P or N to the engine crank wiring. The engine can be cranked only if connector C-43 terminal 4(H) is connected to terminal 1(E), which is connected to ground.
- The mode switch is also used to provide the back up lamp power in reverse. This is the reason why the mode switch is supplied through a 15A fuse (C-3). This fuse can burn due to short circuit in the back up lamp.
- When this fuse is open, the mode switch does not work and DTC54 is set.
- The mode position is defined by the shift linkage which is a link between the shift lever and the mode switch. A bad adjustment of the shift linkage can create a mode switch problem (DTC53).

Diagnostic Aids:

- This Diagnostic is an electrical test done by the TCM.
- Detection conditions:
  - ① Selector Pin A and Pin B and Pin C are not active: no position is identified then.
  - ② Based upon Table 1, in Park shift selector position the code is set when Pin A is open or shorted to ground.
  - ③ The conditions need to be present for at least 5 seconds.
- Action after the detection time: BACKUP MODE
- Recovery conditions: To recover, do an IGNITION CYCLE.

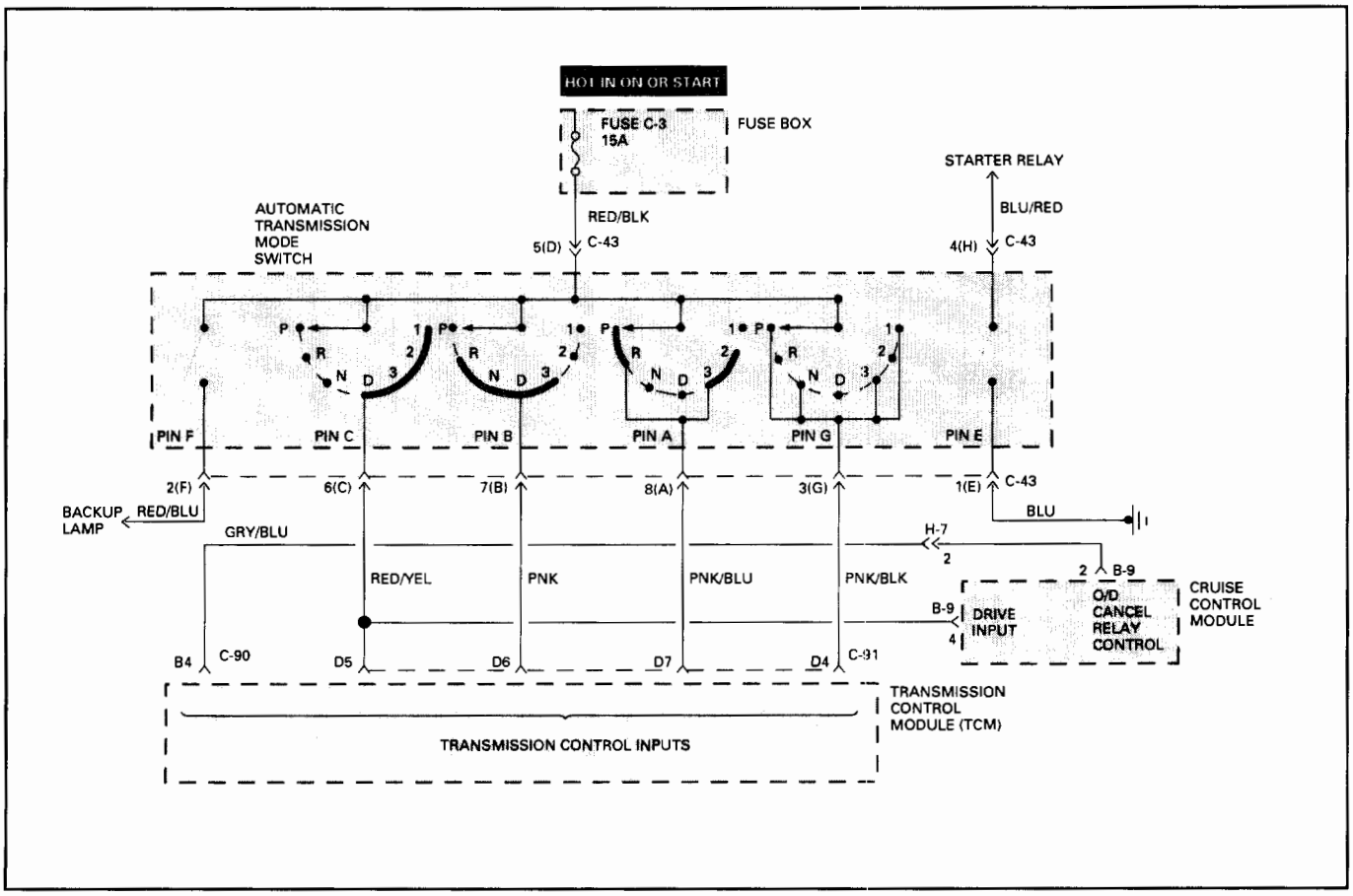

DIAGNOSTIC TROUBLE CODE (DTC) 54
MODE SWITCH ILLEGAL POSITION

- Install scan tool GOTHROUGH **TECH1 CONNECTION.**
- Ignition switch ON. Engine OFF.
- Selector F0: DATALIST: "SELECTOR POS".
- Move shift selector lever through all positions and compare results with Table 1.

IF: all selector pin displays correct:

YES

The problem is intermittent. GOTO **INTERMITTENT CONDITIONS.**

NO

IF: all selector pin displays incorrect:

YES

- Check fuse and wire to connector C-43 terminal 5 (D) for opens. GOTHROUGH MODE SWITCH SETTING PROCEDURE (~~PAGE: 7A-157~~). If problem not solved, replace mode switch.

NO

- Disconnect mode switch connector C-43.
- Connect ohmmeter between terminal 5(D) and respectively all terminals of mode switch connector C-43.
- Move shift selector lever through all positions and compare results with Table 1.

IF: One selector pin display is incorrect:

YES

- Check the wire and connector.
- Repair.

NO

- Check wire to cruise control unit and Transmission Control Module (TCM).
- Repair.

Table 1

	SHIFT SELECTOR POSITION						
TECH1 DISPLAY	P	R	N	D	3	2	L
SELECTOR PIN A	X	X			X	X	
SELECTOR PIN B		X	X	X	X		
SELECTOR PIN C				X	X	X	X
SELECTOR PIN P	X		X		X		X

Note: "X" indicates TECH1 displays "ACTIVE".

DIAGNOSTIC TROUBLE CODE (DTC) 55
BRAKE SWITCH SHORT TO GROUND OR OPEN

This DTC does NOT flash the CHECK TRANS indicator and does NOT set the BACKUP MODE.

Circuit Description:

- The brake switch is a switch on the brake pedal that is used to provide the information: brakes are applied. This is used by different features: cruise control, stop light and Transmission Control Module (TCM).
- The TCM uses the information (brakes applied) mainly to release the Torque Converter Clutch (TCC).
- The brake switch input is constantly connected to battery when the pedal is pressed. TCM terminal D9 is connected to Voltage.
- The brake switch input is opened when the pedal is released. TCM terminal D9 is grounded.

Diagnostic Aids:

- This Diagnostic is not an electrical test done by the TCM but a test between different information ("logic test").
- Detection conditions:
  - ① Brake seen as applied during an acceleration from less than 10 Km/h to more than 60 Km/h within 6 seconds.
  - ② After this acceleration the vehicle speed was higher than 60 Km/h during at least 6 seconds.
  - ③ No Malfunction: Output Speed (DTC11). Downshift Protection (DTC62).
  - ④ The conditions need to be present for at least 5 times during an ignition cycle.
- Action after the detection time: No action but, as the brake is seen as applied, the TCC is never applied.
- Recovery conditions: To recover, brake has to be released.

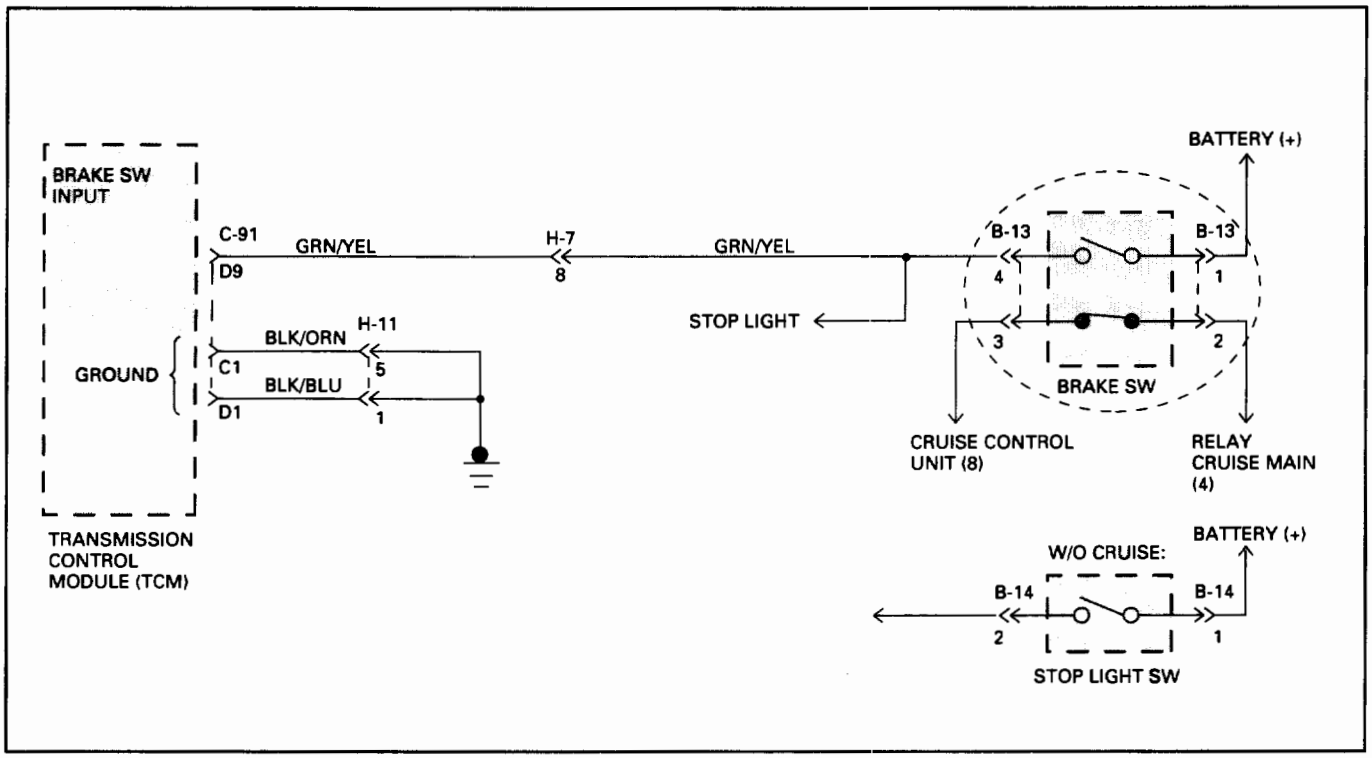

DIAGNOSTIC TROUBLE CODE (DTC) 55
BRAKE SWITCH SHORT TO GROUND OR OPEN

- Install scan tool GOTHROUGH **TECH1 CONNECTION.**
- Ignition switch ON. Engine ON.
- Select F0: DATA LIST: "BRAKE SWITCH".
- Apply brake.

IF: Display is "ACTIVE":

YES

The problem is intermittent. GOTO **INTERMITTENT CONDITIONS.**

NO

- Check the short circuit to ground or open.
- Repair.

DIAGNOSTIC TROUBLE CODE (DTC) 56
BRAKE SWITCH SHORT TO PLUS

This DTC does NOT flash the CHECK TRANS indicator and does NOT set the BACKUP MODE.

Circuit Description:

- The brake switch is a switch on the brake pedal that is used to provide the information: brakes are applied. This is used by different features: cruise control, stop light and Transmission Control Module (TCM).
- The TCM uses the information (brakes applied) mainly to release the Torque Converter Clutch (TCC).
- The brake switch input is constantly connected to battery when the pedal is pressed. TCM terminal D9 is connected to Voltage.
- The brake switch input is opened when the pedal is released. TCM terminal D9 is grounded.

Diagnostic Aids:

- This Diagnostic is not an electrical test done by the TCM but a test between different information ("logic test").
- Detection conditions:
  ① Brake seen as released during a deceleration from more than 60 Km/h to less than 10 Km/h within 6 seconds.
  ② Before this deceleration the car vehicle speed was higher than 60 Km/h during at least 6 seconds.
  ③ No Malfunction: Output Speed (DTC11). Downshift Protection (DTC62).
  ④ The conditions need to be present for at least 5 times during an ignition cycle.
- Action after the detection time: No action but, as the brake is seen as released, the TCC is applied even when the brake is applied.
- Recovery conditions: To recover, brake has to be released.

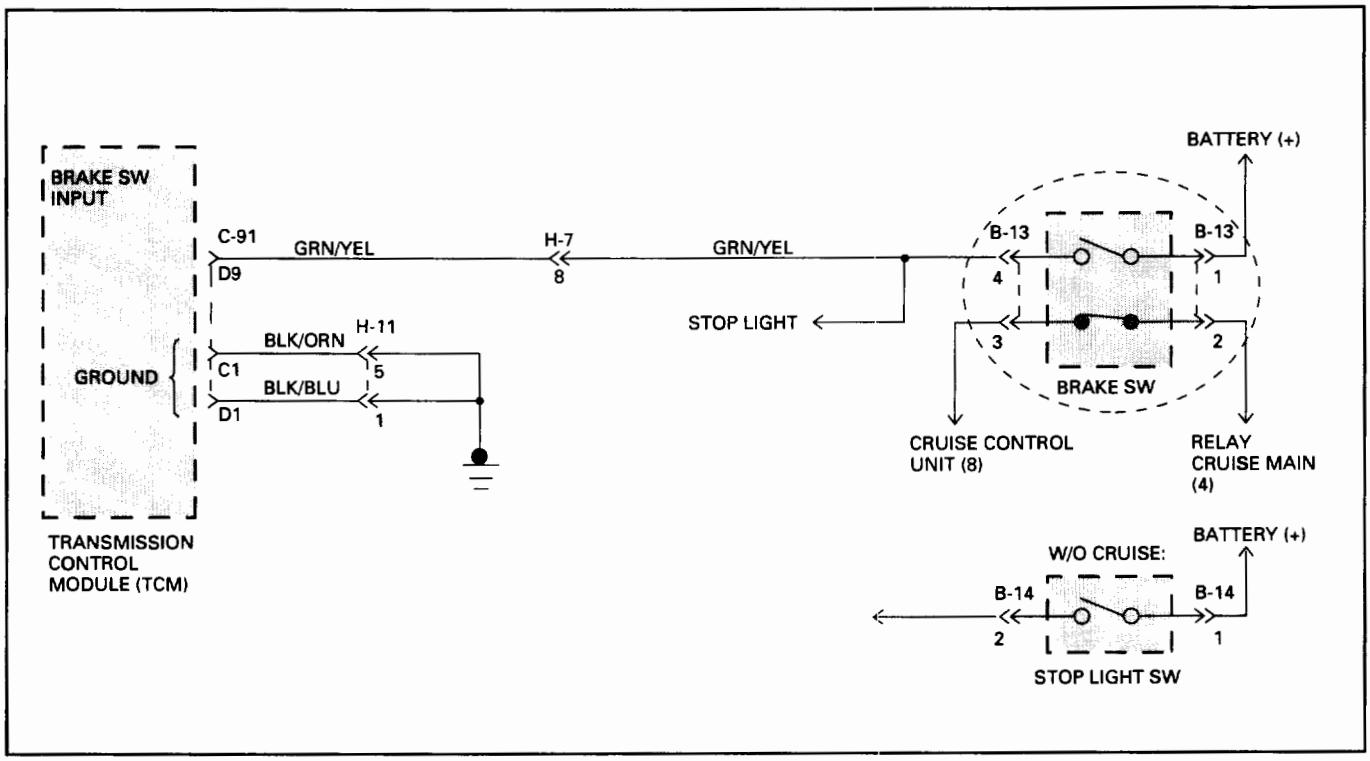

DIAGNOSTIC TROUBLE CODE (DTC) 56
BRAKE SWITCH SHORT TO PLUS

- Install scan tool GOTHROUGH **TECH1 CONNECTION.**
- Ignition switch ON. Engine ON.
- Select F0: DATA LIST: "BRAKE SWITCH".
- Do not touch brake.

IF: Display is "ACTIVE":

YES

- Check the short circuit to voltage.
- Repair.

NO

The problem is intermittent. GOTO **INTERMITTENT CONDITIONS.**

DIAGNOSTIC TROUBLE CODE (DTC) 61

GEAR ERROR

This DTC flashes the CHECK TRANS indicator and sets the BACKUP MODE.

Circuit Description:

- The Transmission Control Module (TCM) is calculating the slippage of the Converter and transmission based upon the Engine Speed, the Output Speed and the current gear ratio.
- The slippage of the converter at a high enough engine speed is low. Then the transmission should not slip more than a given value when there is no shift.

Diagnostic Aids:

- This Diagnostic is not an electrical test done by the TCM but a test between different information ("logic test").
- Detection conditions:
  ① Engine Speed > 3500 RPM
  ② Using the ratio of the current gear the Converter Slippage is calculated based upon the engine speed and the output speed. This slippage must be more than:
  528 RPM in 4th gear
  536 RPM in 3rd gear
  556 RPM in 2nd gear
  595 RPM in 1st gear
  ③ No malfunction: Engine Speed (DTC13). Output Speed (DTC11). Downshift Protection (DTC62).
  ④ The last change of shift solenoid was more than 3 seconds ago.
  ⑤ The conditions need to be present for at least 5.5 seconds.
- Action after the detection time: BACKUP MODE.
- Recovery conditions: To recover, do an IGNITION CYCLE.

NOTE:

The TCC slip data is a calculated value, and not an accurate one.
This value should be used to see if the TCC is engaged or not.

DIAGNOSTIC TROUBLE CODE (DTC) 61
GEAR ERROR

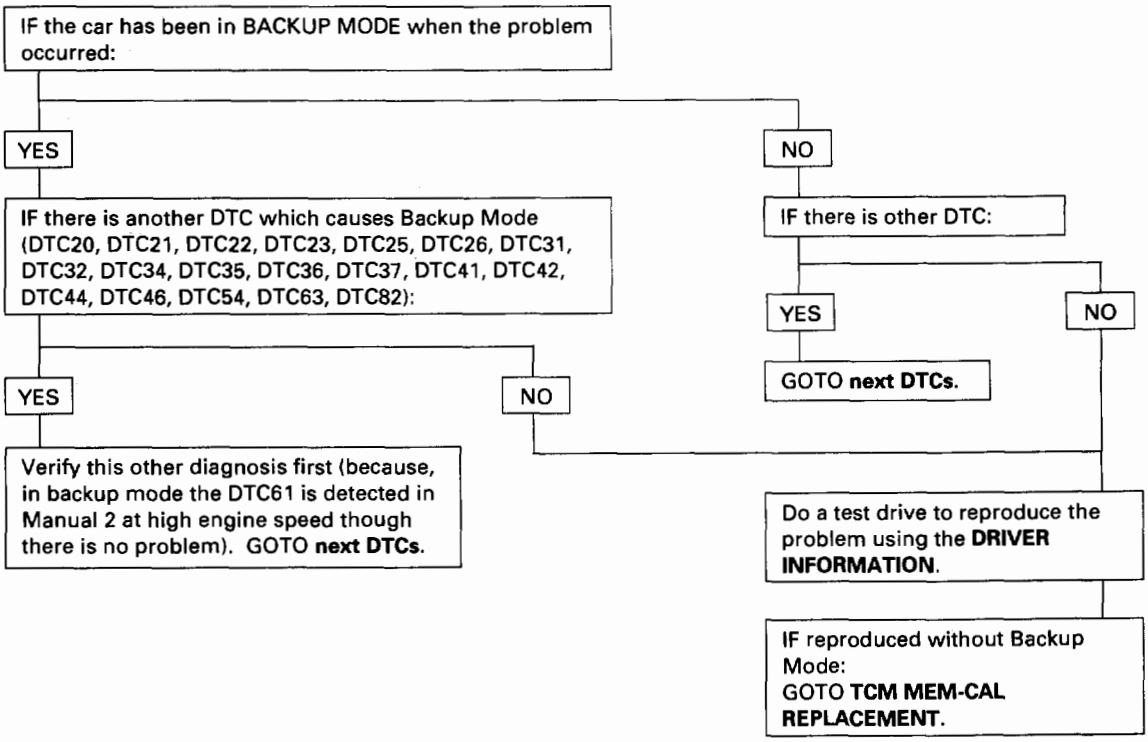

DIAGNOSTIC TROUBLE CODE (DTC) 62
DOWNSHIFT PROTECTION

This DTC flashes the CHECK TRANS indicator and sets the BACKUP MODE.

Circuit Description:

- The output speed information is used to determine if the transmission has to upshift or downshift.
- If this information suddenly changes due to an open circuit or some electrical interference the transmission would downshift.
- To avoid this the Transmission Control Module (TCM) is constantly checking the variations of the Output Speed. If this variation is too great (too much decrease or increase) DTC62 is set. This variation is taken into amount only when the output speed is more than : 90 KPH.
- The transmission output speed sensor provides information on vehicle speed to the TCM. The speed sensor circuit consists of a magnetic induction type sensor. The sensor is mounted above a target wheel pressed on the output shaft in the transmission extension. As the output shaft turns, the target wheel teeth induce a variable voltage in the magnetic pickup. This alternating current (AC) signal is provided to the TCM. The voltage increases with the speed of the wheel but this is not used to define the speed of the vehicle. As the vehicle moves faster, the signal alternates faster between positive and negative voltages. The Output speed information is proportional to the frequency of the signal.

Diagnostic Aids:

- This Diagnostic is not an electrical test done by the TCM but a test between different information ("logic test").
- Detection conditions:
  ① Variation of Output Speed >16 KPH/0.025s.
  ② Ignition ON more than 5 seconds.
  ③ Mode Switch not in P, N or R.
  ④ Last Output Speed > 90 KPH.
  ⑤ The conditions need to be present for at least 0.1 second.
- Action after the detection time: BACKUP MODE.
- Recovery conditions: To recover, do an IGNITION CYCLE.

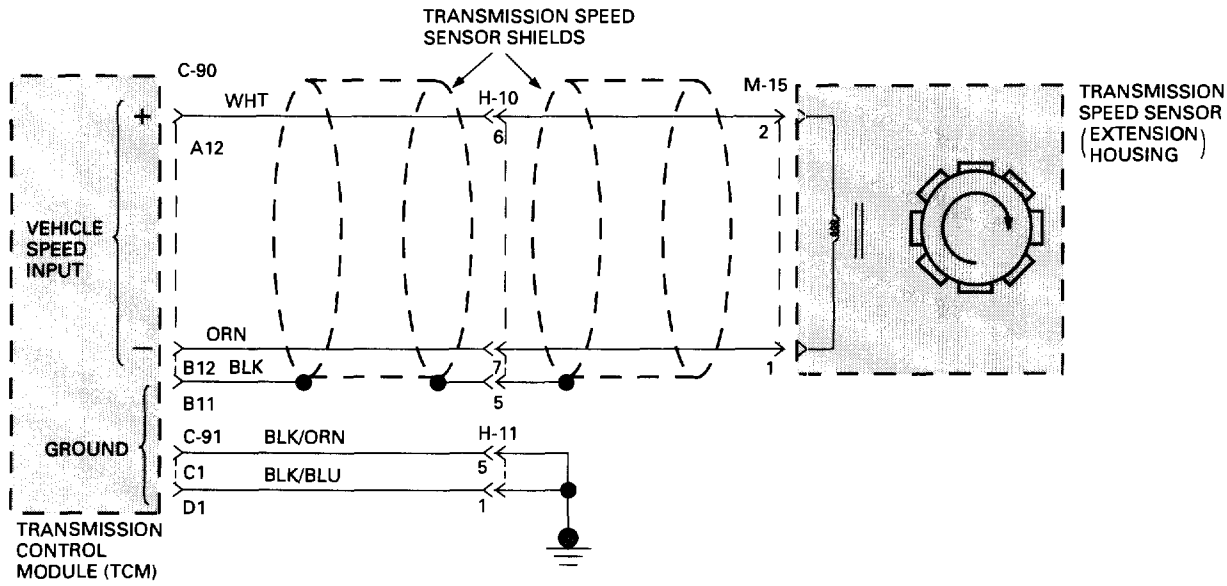

DIAGNOSTIC TROUBLE CODE (DTC) 62
DOWNSHIFT PROTECTION

WARNING: If wire to connector C-90 terminal B12 is short to voltage, Transmission Control Module (TCM) will be damaged.

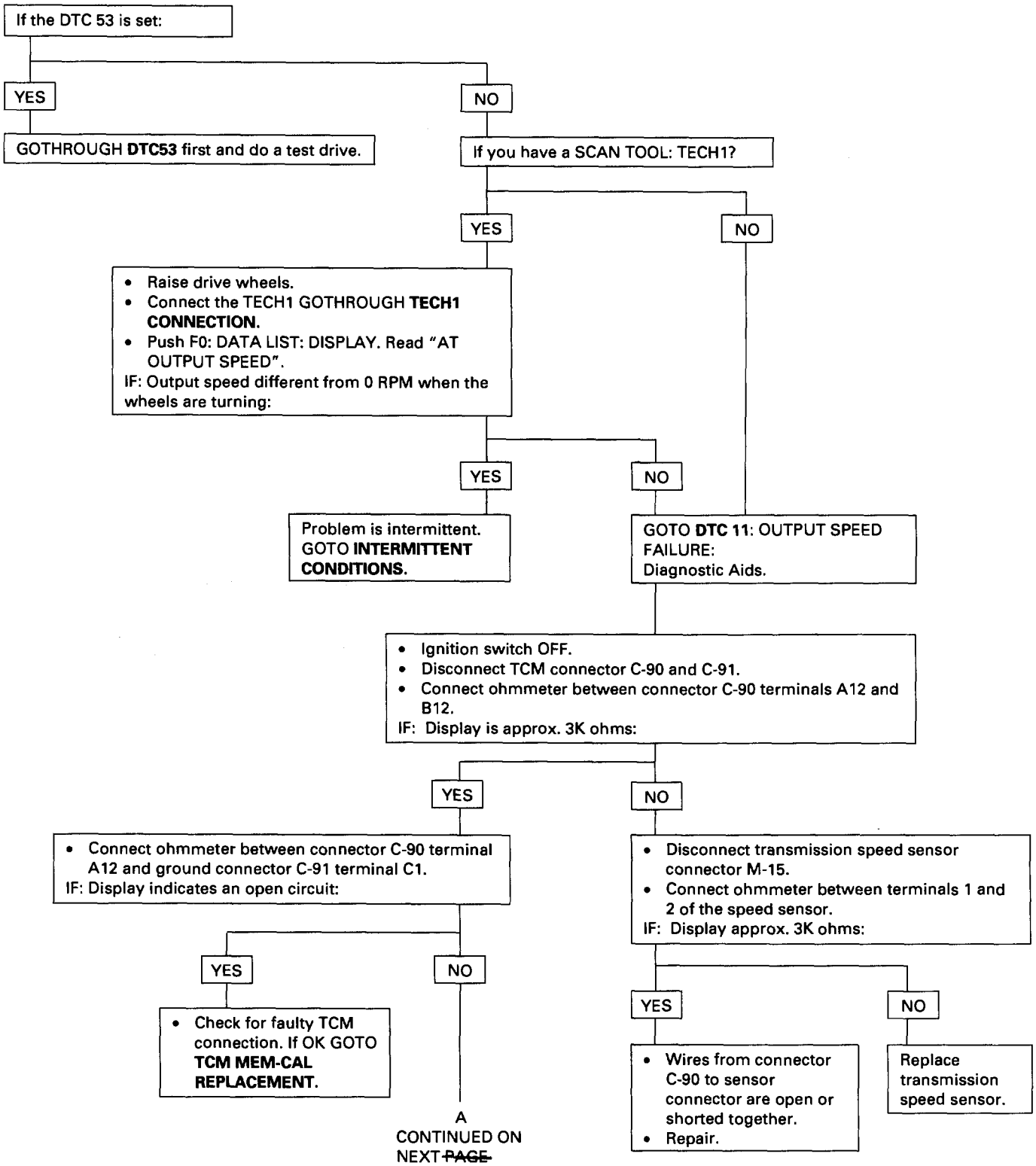

DIAGNOSTIC TROUBLE CODE (DTC) 62
DOWNSHIFT PROTECTION (CONTINUED)

CONTINUED FROM PREVIOUS ~~PAGE~~
A

HINT:
- The wire between connector C-90 terminal B12 and speed sensor connector M-15 terminal 1 can be shorted to ground or open without creating a problem because the TCM B12 pin is connected to the TCM ground iternally and the signal is detected only on the A12 input.
- Check wire for a short to ground between terminal A12 and sensor connector M-15 terminal 2.

IF: Display indicates a short circuit:

YES → Repair.

NO →
- Connect voltmeter between connector C-90 terminal A12 and ground connector C-91 terminal C1.
- Ignition switch ON.

IF: Display indicates approximately 0 volt:

YES →
- Check for faulty TCM connectors. If OK GOTO **TCM MEM-CAL REPLACEMENT.**

NO →
- Check wire for a short to voltage between terminal A12 and speed sensor connector M-15.

DIAGNOSTIC TROUBLE CODE (DTC) 63

EPROM CSUM FAILURE

This DTC flashes the CHECK TRANS indicator and sets the BACKUP MODE.

Circuit Description:

- The Erasable Programmable Read Only Memory (EPROM) is an electronic circuit that contains the commands that control the Transmission Control Module (TCM).
- The EPROM content is checked automatically approx. each second by the TCM. This is called Check Sum (CSUM) calculation. If this CSUM is false this means that one command is altered.
- This can be due to a circuit failure or a bad contact between the EPROM and the TCM and the DTC63 will be set.
- If all EPROM connections are bad, the TCM does not work. The CSUM can not be calculated and detected. Nothing works, not even the CHECK TRANS indicator.

Diagnostic Aids:

- This Diagnostic is not an electrical test done by the TCM but a test between different information ("logic test").
- Detection conditions:
  ① Bad EPROM Check Sum.
  ② The condition needs to be present for at least approx. 1 second.
- Action after the detection time: BACKUP MODE.
- Recovery conditions: To recover, do an IGNITION CYCLE.

To Solve the Problem

- Check the EPROM MEM-CAL connector.
- If condition still exists, replace MEM-CAL.

DIAGNOSTIC TROUBLE CODE (DTC) 82

SHIFT OR BAND APPLY SOLENOIDS FAULTY DURING DRIVING

This DTC flashes the CHECK TRANS indicator and sets the BACKUP MODE.

Circuit Description:

- The shift solenoids are simple ON/OFF solenoids located in the main case valve body. The solenoids are normally closed or open-type. Depending on gear the Transmission Control Module (TCM) controls the solenoids to open or close a fluid inlet port. When the port is open, fluid pressure actuates the shift valve.
- The solenoid is activated by a current. This current is produced by applying a voltage to one side (the High side) and a ground to the other side (Low side).
- The High Side Driver (HSD) is a circuit of the TCM that acts as a switch between the solenoids and the supply voltage. The High side of the solenoid is permanently supplied with voltage, except in BACKUP MODE or when Ignition is OFF the High Side Driver is turned OFF.
- The Low Side Driver (LSD) is a circuit of the TCM that acts as a switch between the solenoid and ground. When the solenoid is commanded ON the TCM is switching the solenoid to ground. The TCM continually monitors each solenoid connection to its Low Side Driver and to its High Side Driver for either low or high voltage.
- DTC82 is activated when the Shift High Side Driver or one of the Shift Low Side Drivers senses a short circuit or open circuit when the engine is cranked, then when the car is driven. DTC82 can be set only when the TCM is activating the solenoids in with the problem circuit.
- To know where the fault comes from, do IGNITION CYCLE to use the TCM self-check of solenoids when Engine is not cranked but Ignition ON.

Diagnostic Aids:

- This diagnostic is an electrical test done by the TCM.
- Detection conditions:
  ① HSD or LSD is improperly ON.
  ② The condition needs to be present for at least 0.15 second.
- Action after the detection time: BACKUP MODE
- Recovery conditions: To recover, do after IGNITION CYCLE.

DIAGNOSTIC TROUBLE CODE (DTC) 82
SHIFT OR BAND APPLY SOLENOIDS FAULTY DURING DRIVING

This DTC is set when the car is driven (Engine ON) but the diagnostic is not specific.
To correctly identify the problem, do an IGNITION CYCLE.

If you have not already done an IGNITION CYCLE:
- Turn ignition switch OFF. Turn ignition switch ON and wait 3 seconds to have the specific diagnostic done.
- Then you can turn the engine ON or not.

Check on Scan Tool or Flashing Code what other DTC is provided. It should be one of the following:
DTC31 or DTC32 or DTC34 or DTC36 or DTC41 or DTC42 or DTC44 or DTC46.

GOTO this **DTC**.

WITHOUT DTC SET

1. If you have already checked the Diagnostic Trouble Code (DTC) and the scan tool TECH1 does not provide any DTC, and you have reproduced the problem and no DTC was stored:
   This means that you have to check the problem by comparing the way it should work to the way it works now that the problem exits.
2. To find the problem, perform the following tests:
   - A/T Oil Temperature Indicator Test
   - Transmission Operating Mode Test

A/T OIL TEMPERATURE INDICATOR TEST

1. Working normally if it is ON for 2 to 3 seconds with ignition switch ON (or when the engine is cranked) but it is OFF after.

2. Not working normally if it stays ON always when ignition is ON.
   ① This means that connection between the Lamp and the Transmission Control Module (TCM) is shorted to ground.
   ② Verify if Indicator connector I-1 terminal 2 is shorted to ground.
   ③ Verify if the TCM connector C-90 terminal A10 is shorted to ground.
   ④ Verify that the Indicator connector I-1 terminal 6 is connected to Battery.
   ⑤ If problem not solved GOTO **TCM MEM-CAL REPLACEMENT.**
   ⑥ If problem solved see **CHECK TRANS INDICATOR** (page 7A-46).

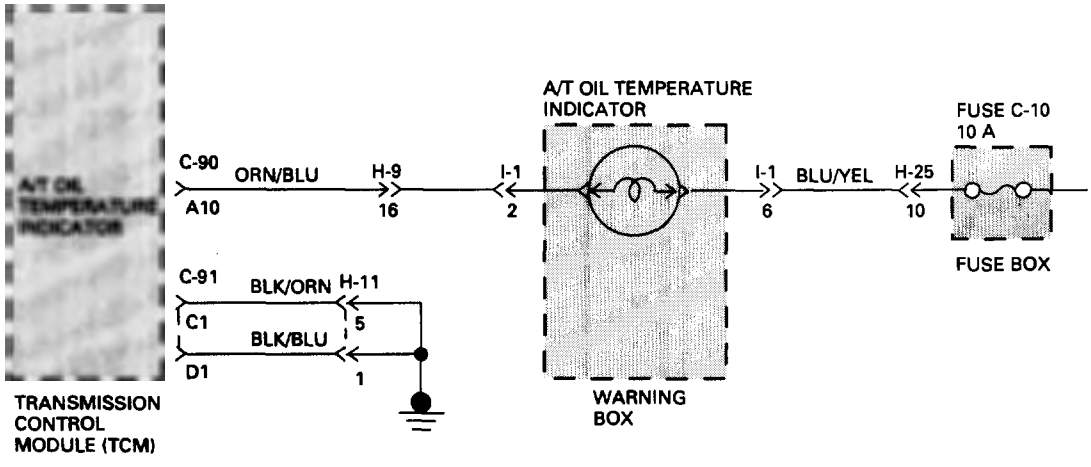

TRANSMISSION OPERATING MODE TEST

Circuit Description:

The Transmission Control Module (TCM) can controls 4L30-E operation in three modes: Power mode, Normal mode, and Winter mode. The driver determines the transmission operating mode through the Power/Normal mode switch and the Winter mode switch.

The Power mode provides better part-throttle acceleration by delaying part-throttle upshifts.

In Winter mode, the transmission starts in third gear to reduce tire slippage on ice and snow. When the driver selects Winter mode, the TCM overrides the Power or Normal mode. The TCM will enter Winter mode only when all of the following conditions are met:

- Selector lever in D range.
- Vehicle speed 7 mph (11 km/h) or less.
- Transmission oil temperature 120°C (248°F) or less.
- Throttle opening 8% or less.
- Kick-down switch is off.

Winter mode will be canceled if any of the following conditions are met:

- Driver depresses Winter mode switch again.
- Driver moves selector lever to 3,2 or L (TCM will stay in Winter mode if lever is moved from D to N or R or P).
- Ignition switch is turned off.
- Vehicle speed is 21 mph (34 km/h) or more for longer than one second.
- Transmission oil temperature is greater than 140°C (284°F).
- Kickdown switch is "ON" for more than 3 seconds.

When Winter mode is canceled, the TCM returns the transmission to Normal mode.

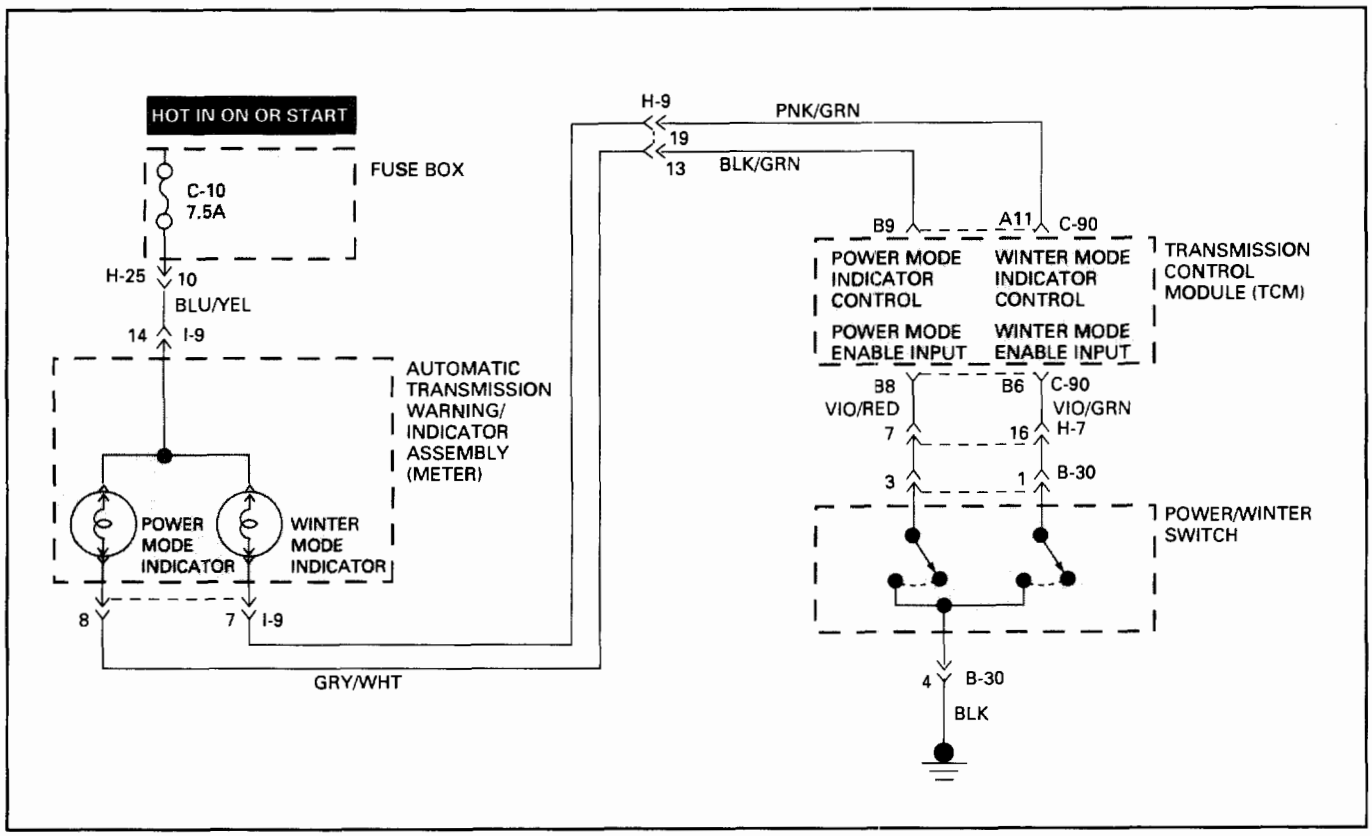

TRANSMISSION OPERATING MODE TEST

IF: When you operated the Power Switch the indicator turned ON:

- YES → No Problem.
- NO →
  - Install scan tool GOTHROUGH **TECH1 CONNECTION.**
  - Ignition switch ON.
  - Select F0: DATA LIST: POWER SWITCH.

  Does TECH1 display "INACTIVE"?

  - YES →
    - Press and hold down the Power Switch.

    Does TECH1 display "ACTIVE"?

    - YES → The Power Switch is working normally.
    - NO →
      - Check wire for open between TCM connector C-90 terminal B8 and the Power Switch.

      IF OK, replace the Power/Winter Switch.
  - NO →
    - Check wire for short to ground between Transmission Control Module (TCM) connector C-90 terminal B8 and the Power Switch.

    IF OK, replace the Power/Winter Switch.

IF: When you operated the Winter Switch the indicator turned ON:

- YES → No Problem.
- NO →
  - Select F0: DATA LIST: WINTER SWITCH.

  Does TECH1 display "INACTIVE"?

  - YES →
    - Press and hold down the Winter Switch.

    Does TECH1 display "ACTIVE"?

    A

    CONTINUED ON NEXT PAGE
  - NO →
    - Check wire for short to ground between connector C-90 terminal B6 and the Winter Switch.

    IF OK, replace the Power/Winter Switch.

TRANSMISSION OPERATING MODE TEST (CONTINUED)

CONTINUED FROM PREVIOUS PAGE

A

YES

The Winter Switch is working normally.

- Selector lever in Park.

Does either Power or Winter mode indicator stay on all the time?

YES

- Check wire for short to ground between TCM connector and indicator (SEE SCHEMATIC).

IF OK, GOTO **TCM MEM-CAL REPLACEMENT.**

NO

- Ignition switch ON.
- Selector lever in Neutral and parking brake applied.
- Select F5: ACTUATOR TEST: CHECK WINTER LAMP?"
- Press YES.

Does Winter Mode Indicator light?

YES

- Select F5: ACTUATOR TEST: CHECK POWER LAMP?"
- Press YES.

Does Power Mode Indicator light?

YES

The system is functioning correctly.

NO

- Check fuse, bulb, and wire for open between connector C-90 terminal B9 and indicator and between indicator and fuse.
- Check wire for short to B+ between connector C-90 terminal B9 and indicator.

IF OK, GOTO **TCM MEM-CAL REPLACEMENT.**

NO

- Check Fuse, bulb, and wire for open between connector C-90 terminal A11 and indicator and between indicator and fuse.
- Check wire for short to B+ between connector C-90 terminal A11 and Indicator.

IF OK, GOTO **TCM MEM-CAL REPLACEMENT.**

NO

- Check wire for open between TCM connector C-90 terminal B6 and the Winter Switch.

IF OK, replace the Power/Winter Switch.

TCM: Transmission Control Module

TCM PRECAUTONS

The TCM can be damaged by:
(1) The Electrostatic discharge
(2) The short circuit of some terminals to voltage or to ground.

Electrostatic Discharge Damage Description:
(1) Electronic components used to control systems are often designed to carry very low voltage, and are very susceptible to damage caused by electrostatic discharge. It is possible for less than 100 volts of static electricity to cause damage to some electronic components. By comparison, it takes as much as 4000 volts for a person to even feel the zap of a static discharge.
(2) There are several ways for a person to become statically charged. The most common methods of charging are by friction and induction. An example of charging by friction is a person sliding across a car seat, in which a charge of as much as 25,000 volts can build up. Charging by induction occurs when a person with well insulated shoes stands near a highly charged object and momentarily touches ground. Charges for the same polarity are drained off, leaving the person highly charged with the opposite polarity. Static charges of either type can cause damage, therefore, it is important to use care when handling and testing electronic components.

NOTICE: To prevent possible Electrostatic Discharge damage:
(1) Do not touch the TCM connector pins or soldered components on the TCM circuit board.
(2) When handling a Mem-Cal (PROM), do not touch the component leads, and do not remove integrated circuit from carrier.
(3) Be sure to follow the guidelines listed below if servicing any of these electronic components:
(4) Do not open the replacement part package until it is time to install the part.
(5) Avoid touching electrical terminals of the part.
(6) Before removing the part from its package, ground the package to a known good ground on the vehicle.
(7) Always touch a known good ground before handling the part. This step should be repeated before installing the part if the part has been handled while sliding across the seat, while sitting down from a standing position or while walking some distance.

INFORMATION ON TCM:
(1) The Transmission Control Module (TCM) is located in the driver compartment and is the control center of the electronic transmission control system.
(2) The TCM must be maintained at a temperature below 185°F (85°C) at all times. This is most essential if the vehicle is put through a paint baking process. The TCM will become inoperative if its temperature exceeds 85°C (185°F). Therefore, it is recommended that the TCM be removed or that temporary insulation be placed around the TCM during the time the vehicle is in a paint oven or other high temperature process.
(3) The TCM is designed to process the various inputs and then respond by sending the appropriate electrical signals to control transmission upshift, downshift, shift feel and torque converter clutch engagement.
(4) The TCM constantly interprets information from the various sensors, and controls the systems that affect transmission and vehicle performance. By analyzing operational problems, the TCM is able to perform a diagnostic function by displaying DTC(s) and aid the technician in making repairs.

PROM/MEM-CAL:
(1) Information for a specific engine and vehicle is programmed using an integrated circuit called a Programmable Read-Only Memory (PROM). It is also called a MEM-CAL (Memory Calibrator). This allows one model of controller to be used for many different vehicles. The PROM is located inside the TCM and has information on the engine, transmission, calibration., etc. While one TCM part number can be used by many vehicle lines, a PROM is more specific and must be used only with the right vehicles. For this reason, it is very important to check the latest parts book and Service Bulletin information for the correct part number when replacing a PROM.

INTERMITTENT CONDITIONS

If the TECH1 displays a diagnostic trouble code as intermittent, or if after a test drive a DTC does not reappear though the detection conditions for this DTC are present: the problem is most likely a faulty electrical connection or loose wiring. Terminals and grounds should always be the prime suspect. Intermittents rarely occur inside sophisticated electronic components such as the TCM.

Use the DTC information to understand which wires and sensors are involved.

When an intermittent problem is encountered, check suspect circuits for:

(1) Poor terminal to wire connection.
(2) Terminals not fully seated in the connector body (backed out).
(3) Improperly formed or damaged terminals.
(4) Loose, dirty, or corroded ground connections:
HINT: Any time you have an intermittent in more than one circuit, check whether the circuits share a common ground connection.
(5) Pinched or damaged wires.
(6) Electro-Magnetic Interference (EMI):
HINT: Check that all wires are properly routed away from spark plug wires, distributor wires, coil, and generator. Also check for improperly installed electrical options, such as lights, 2-way radios, etc.

Use the F3: SNAPSHOT mode of the TECH1 to help isolate the cause of an intermittent fault. The snapshot mode will record information before and after the problem occurs. Set the snapshot to "trigger" on the suspect DTC or, if you notice the reported symptom during test drive, trigger the snapshot manually.

(1) NOTE: When TECH1 is plugged the shifts are always done at the maximum pressure. This means that if you do SNAPSHOT while driving you will notice firm shifts.

After the snapshot has been triggered, command the TECH1 to play back the flow of data recorded from each of the various sensors. Signs of an intermittent fault in a sensor circuit are sudden unexplainable jump in data values out of the normal range.

CASE: problem still not solved GOTO **TCM MEM-CAL REPLACEMENT.**

TCM MEM-CAL REPLACEMENT
(TCM: Transmission Control Module)

1. MEM-CAL (Memory and Calibration Unit)

Information for specific transmission and vehicle is programmed using an integrated circuit called a MEM-CAL.

This allows one model of controller to be used for many different vehicles.

The MEM-CAL is located inside the TCM and has information on the transmission, shift map, etc. several others.

2. MEM-CAL Replacement

If the diagnostic procedures require MEM-CAL replacement, the MEM-CAL should be replaced using the following procedures.

NOTICE:

The ignition must be "OFF", when disconnecting or reconnecting the TCM connector, to prevent internal damage to the TCM.

NOTICE:

To prevent possible Electrostatic Discharge damage to the TCM, do not touch the connector pins or soldered components on the circuit board.

MEM-CAL Replacement Procedure:

1. Remove TCM from driver compartment (Fig. 7A-10a):
   (1) Disconnect negative (–) battery cable.
   (2) Remove connectors from TCM.
   (3) Remove TCM from driver compartment.
   (4) Remove MEM-CAL access cover.

   NOTE:
   Do not remove any of the other screws.

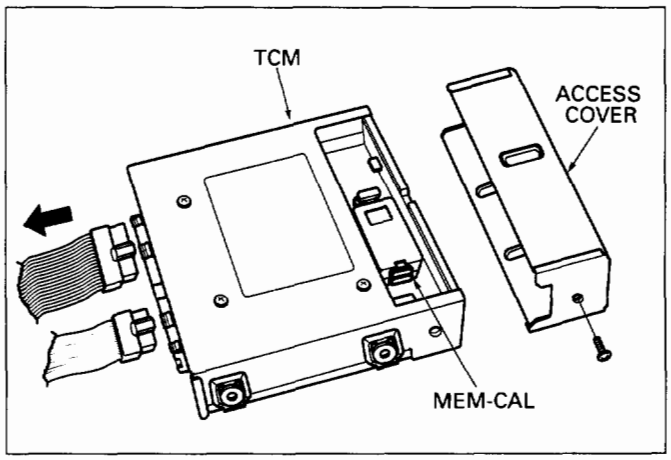

Fig. 7A-10a

2. Remove MEM-CAL from TCM (Fig. 7A-10b).
   - Using two fingers, pinch both retaining clips and remove MEM-CAL from the MEM-CAL socket.
     Using unapproved MEM-CAL removal methods may cause damage to the MEM-CAL or socket.

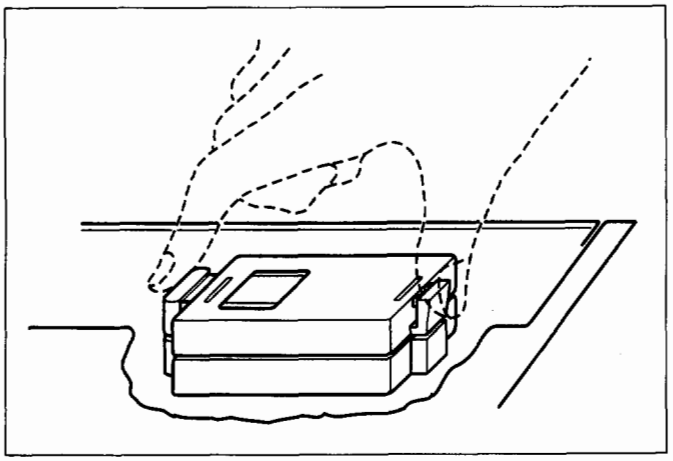

Fig. 7A-10b

3. Check new MEM-CAL
   - Check the part number of the new MEM-CAL to make sure it is the correct replacement part.
4. Install new MEM-CAL
   - Small notches in the MEM-CAL must be aligned with small notches in the MEM-CAL socket (Fig. 7A-10c).
   - Gently press down on the ends of the MEM-CAL until the clips are locked. Listen for the click (Fig. 7A-10d).

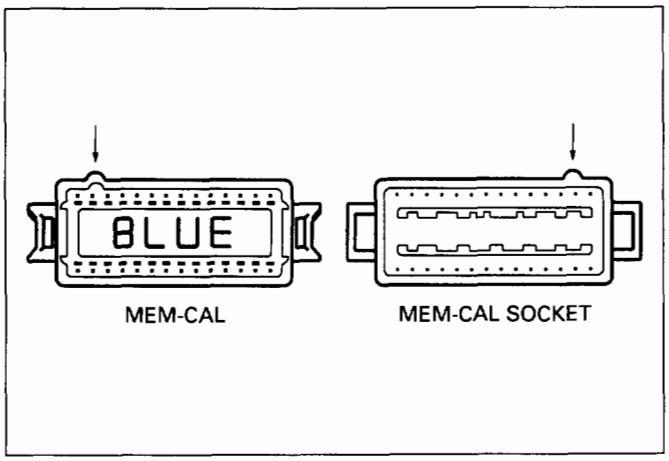

Fig. 7A-10c

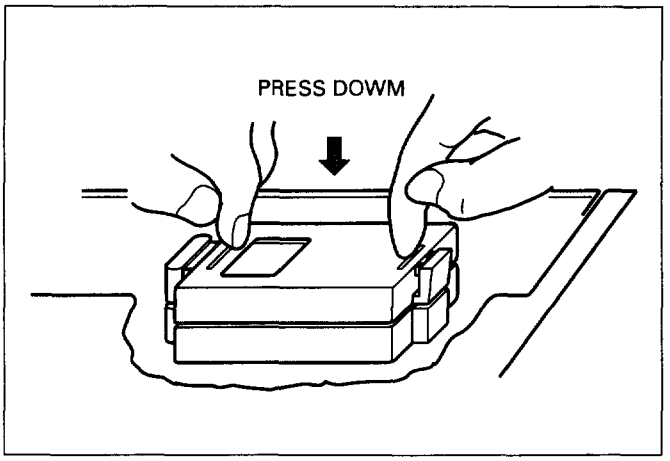

Fig. 7A-10d

5. Install TCM to driver compartment:
   (1) Install MEM-CAL access cover.
   (2) Install TCM to driver compartment.
   (3) Connect TCM connectors.
   (4) Connect negative (–) battery cable.
   (5) Do an IGNITION CYCLE and verify correct CHECK TRANS indicator operation.

MEMO

WIRING DIAGRAM

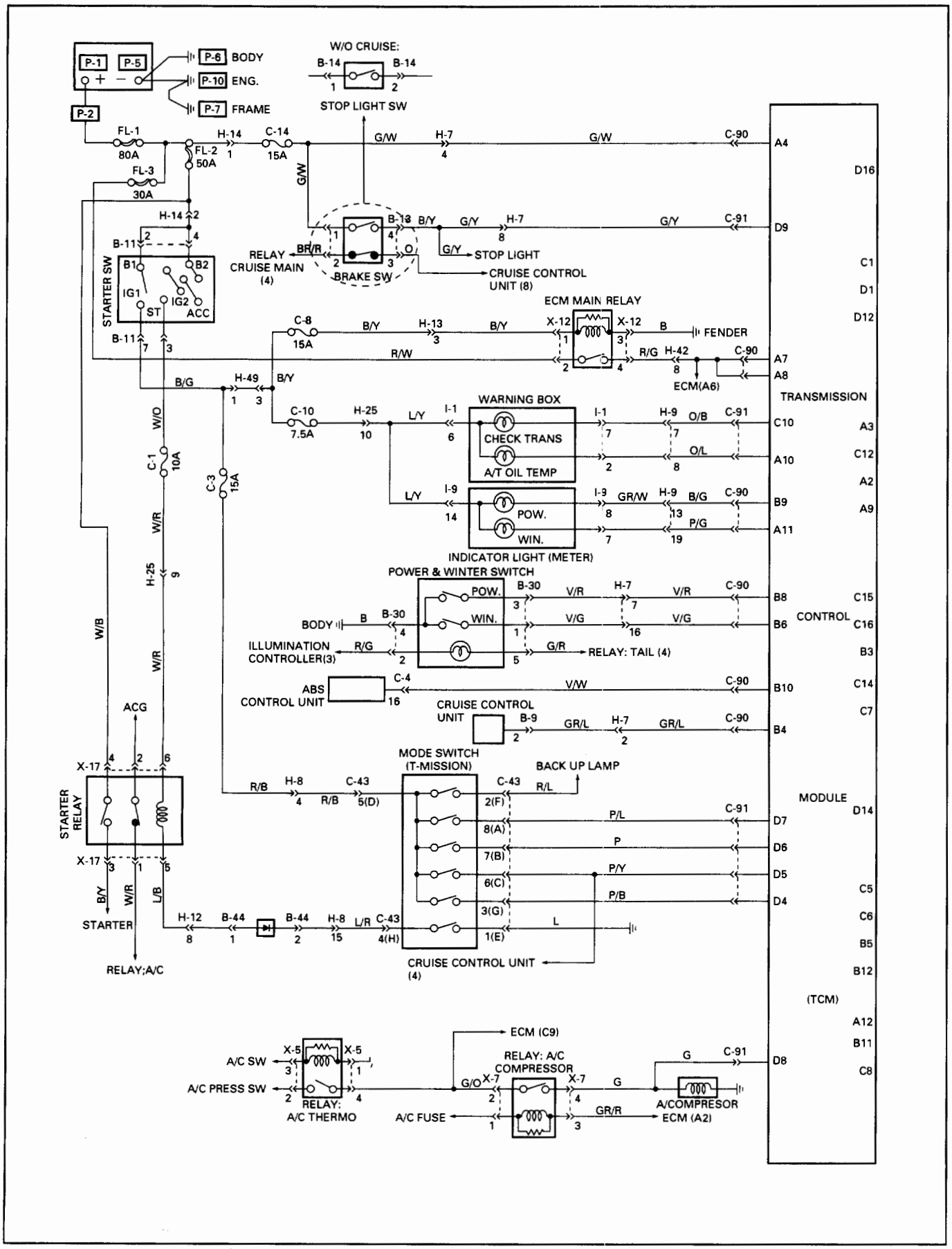

Fig. 7A-11

WIRING DIAGRAM

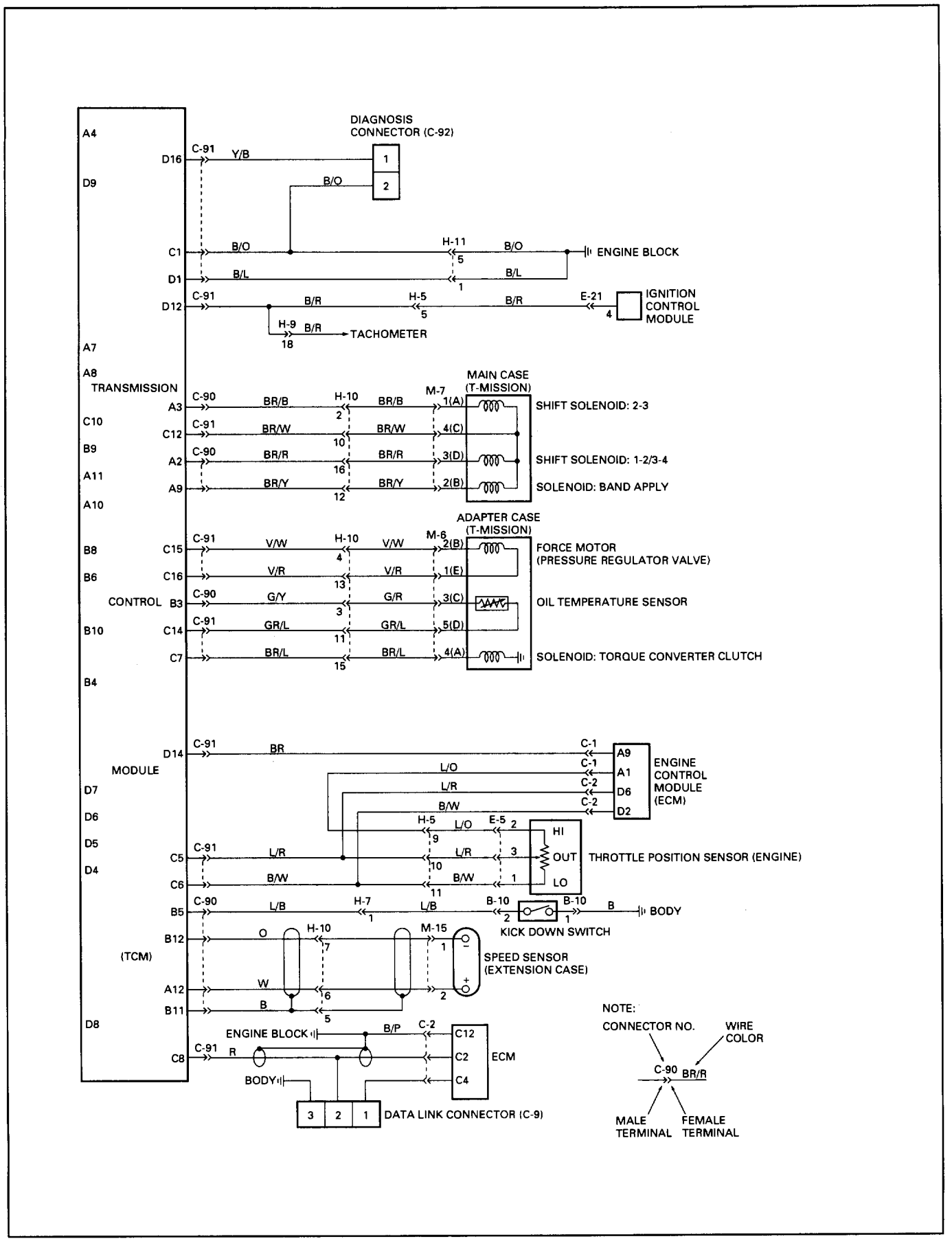

Fig. 7A-11a

CONNECTOR LOCATION

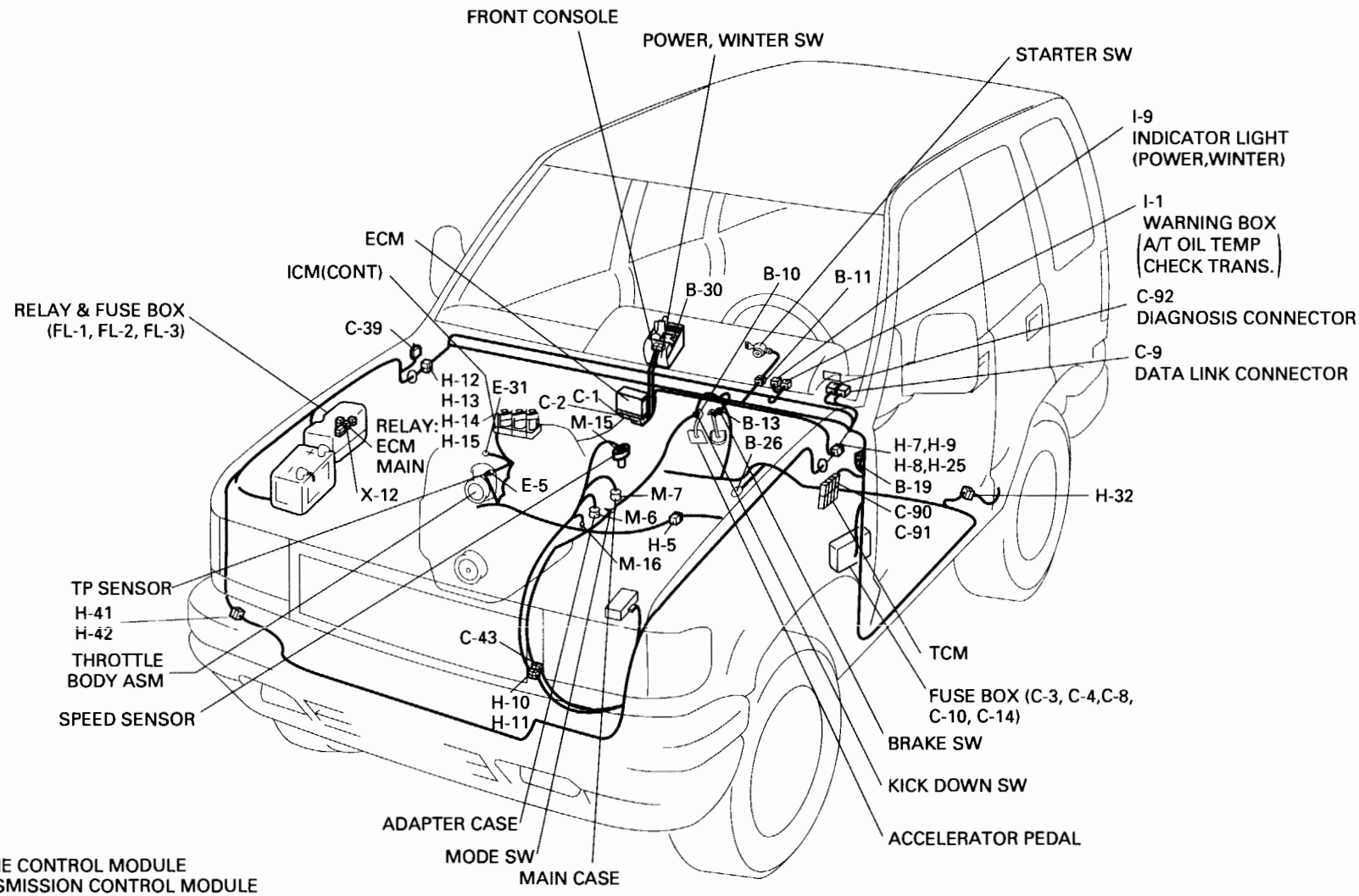

ECM: ENGINE CONTROL MODULE
TCM: TRANSMISSION CONTROL MODULE
TP : THROTTLE POSITION
ICM : IGNITION CONTROL MODULE

Fig. 7A-12

CONNECTOR LIST

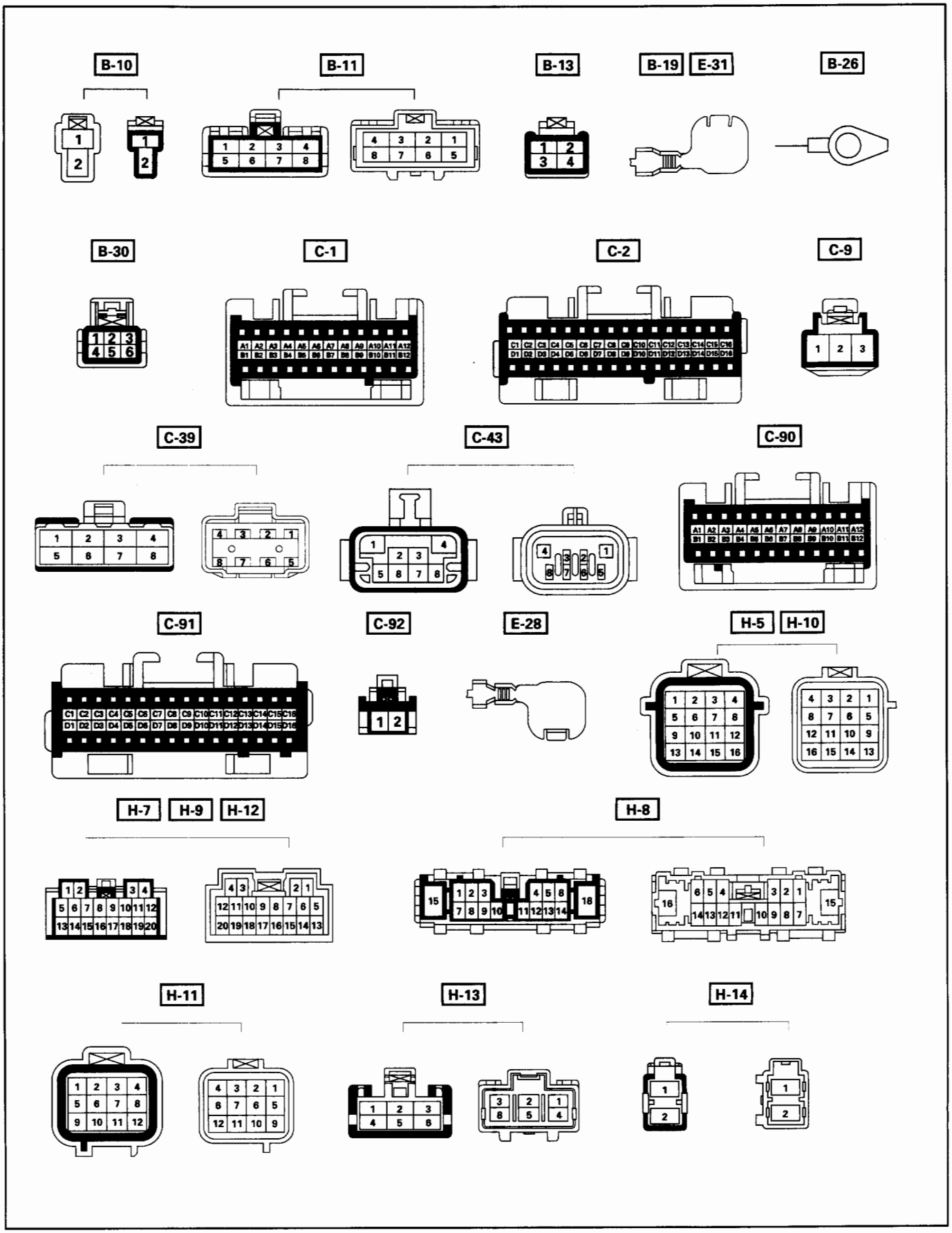

Fig. 7A-13

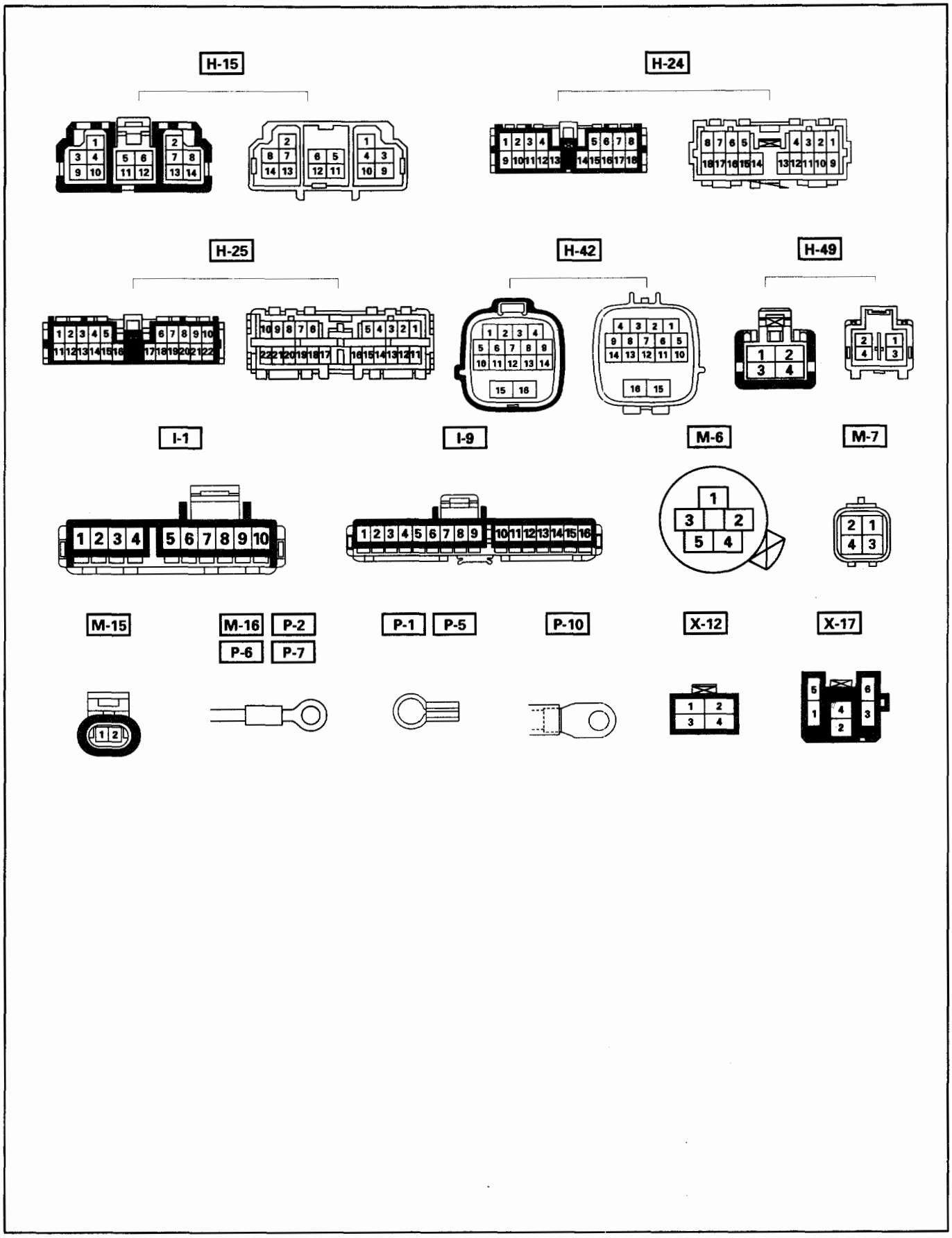

Fig. 7A-13a

ON-VEHICLE SERVICE

CHECKING TRANSMISSION FLUID LEVEL

1. Park the vehicle on level ground.
2. Apply the parking brake.
3. Place the automatic transmission in "Park" and start the engine. Allow the engine to idle for two minutes.
4. With the brakes applied, move the shifter lever through all the gear ranges, ending in "Park".
5. Remove the dipstick, Carefully touch the dipstick with your finger to determine the temperature of the fluid. (Fig. 7A-14)
   - If the fluid is cool or warm (approximately room temperature) or slightly higher (but not too hot to touch), the fluid level should be within the "Cold" range.
   - If the fluid is hot, the fluid level should be within the "Hot" range.

a

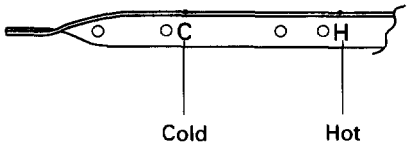

Fig. 7A-14

   - If the vehicle has just been driven for a long period of time at highway speeds or in city traffic in hot weather, wait 30 minutes for the fluid to cool down before checking fluid level.
6. If fluid level is low, add enough DEXRON®-III Automatic transmission fluid to bring transmission to its proper fluid level through the transmission oil filler tube.

NOTE:
The automatic transmission fluid level must be checked with the vehicle at normal A/T oil operating temperature: 75 TO 85°C (167 TO 185°F) measured with TECH1 scan tool.
Overfilling or underfilling could result in damage to the transmission.
- If fluid level is low, inspect the area around the oil pan for leakage.
- If the fluid smells burnt or is black, replace it.

CHANGING TRANSMISSION FLUID

There is no need to change the transmission fluid unless the transmission is used under one or more of the following heavy duty conditions.

A: Repeated short trips
B: Driving on rough roads
C: Driving on dusty roads
D: Towing a trailer

If the vehicle is used under these conditions, change the fluid every 20,000 miles (32,000 km.)
There is no drain plug in the oil pan. Oil should be extracted with suitable suction device through the filler tube. Alternately the fluid can be drained by carefully removing the oil pan. Place a large drain pan under the oil pan, remove 13 bolts on the right, left and front sides of the oil pan and loosen 3 bolts on the rear side.
Drain the fluid carefully.
Hold the pan horizontally, remove the remaining 3 bolts and remove pan and gasket. Clean the oil pan and reinstall it with a new gasket. It is also recommended to replace the fixing bolts. Tighten 16 fixing bolts to 11 N·m (8 lb·ft.) torque.

MANUAL LINKAGE

INSPECTION

1. Make sure that when the shifter control lever is shifted from "P" to "L", a "clicking" can be felt at each shift position. Make sure that the gear corresponds to that of the position plate indicator.
2. Check to see if the shifter lever can be shifted as shown in Fig. 7A-15.

b

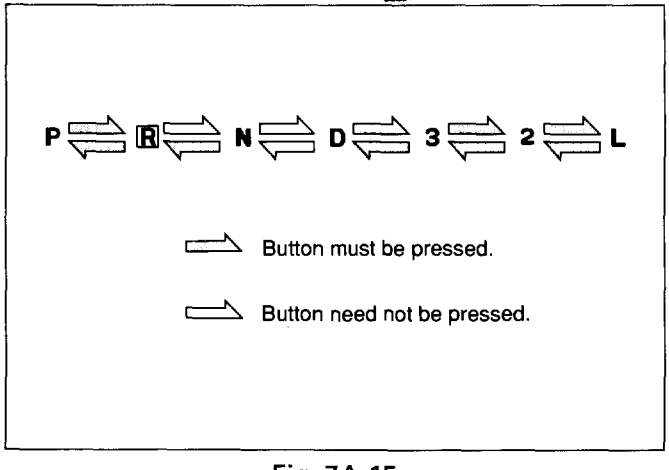

Fig. 7A-15

SELECTOR LEVER

REMOVAL

Preparation:

- Disconnect negative (–) battery cable.

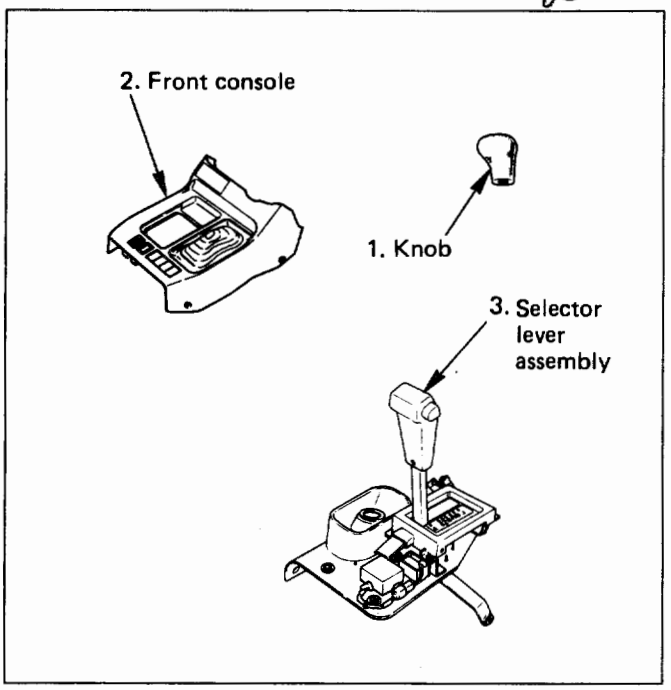

Fig. 7A-16

1. **Transfer control lever knob**
2. **Front console**
   - Disconnect wiring harness connectors.
3. **Selector lever assembly**
   - Disconnect shift lock cable from the selector lever assembly side (Fig.7A-16a).
   - Disconnect wiring harness connectors.
   - Disconnect shift control rod from the selector lever assembly side (Fig.7A-16b).

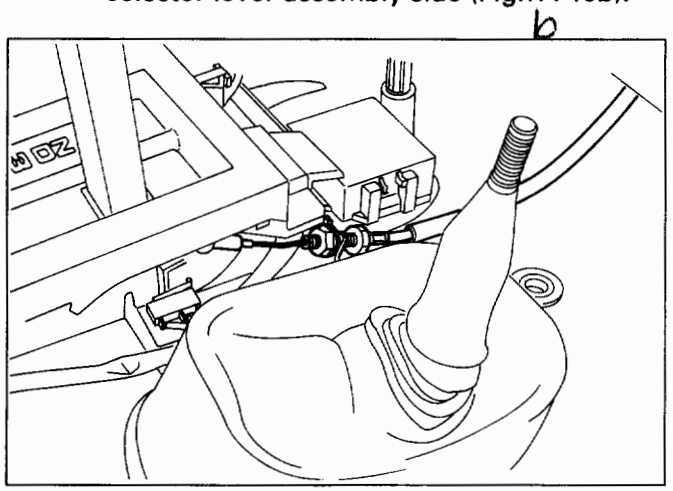

Fig. 7A-16a

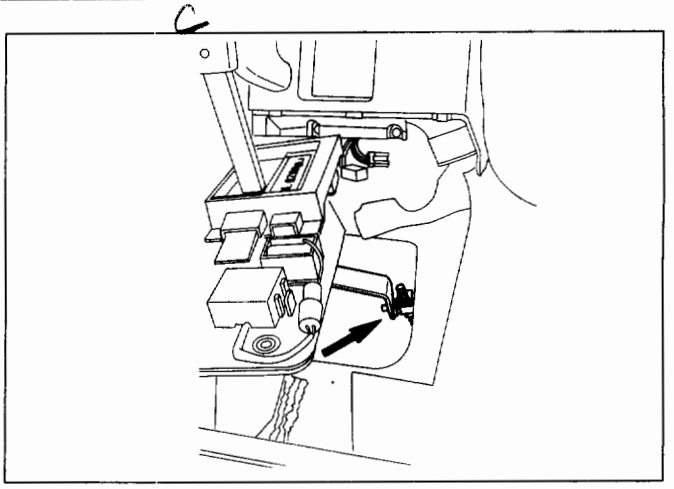

Fig. 7A-16b

INSTALLATION

To install, follow the removal steps in the reverse order, noting the following points;

Adjustment of select lever and control rod (Fig. 7A-16c)

(1) Set select lever in the "N" position.
(2) Push select lever forward and secure it (using a rubber band, etc.) so that pin comes into contact with the wall of detent plate.
(3) Turn nut ① by hand until it comes into contact with boss ③.
(4) With nut ① fixed with an appropriate tool, turn nut ②.

Torque	N·m(lb·ft)	27 (20)

(5) Install clip ④ and tighten with nut ⑤.

Torque	N·m(lb·in)	7 (61)

NOTE:
Clean the rod threads and do not apply oil to the threaded portions.

(6) After adjustment, operate select lever on a trial basis to make sure of its smooth operation and no abnormal indication in each position.

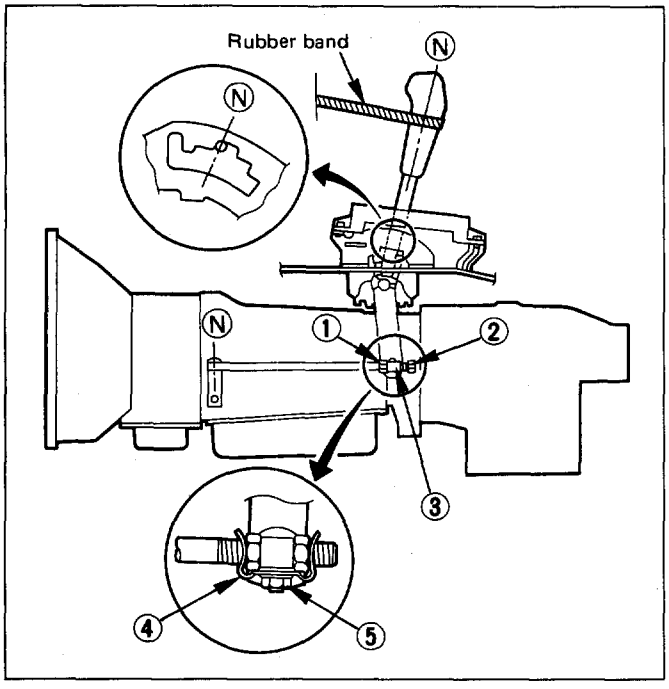

Fig. 7A-16c

Adjustment of shift lock cable (Fig. 7A-16d)

(1) Set IGN key in "LOCK" position and selector lever in "P" position.

(2) Adjust cable screw cap on selector lever side to provide a gap (slack for cable) of 2.0 ± 0.5mm between rod on steering lock side and stopper. Adjust cap as follows:
① Hand turn nut (A) until it comes in contact with bracket while pulling screw cap in
② Then turn nut (A) 2 reverse turns (2 mm) to give slack to inner cable.
③ Lock inner cable by turning nut (B) while holding nut (A) in place.

Torque	N·m(lb·in)	4 (35)

NOTE:
Clean the cable threads and do not apply oil to the threaded portions.

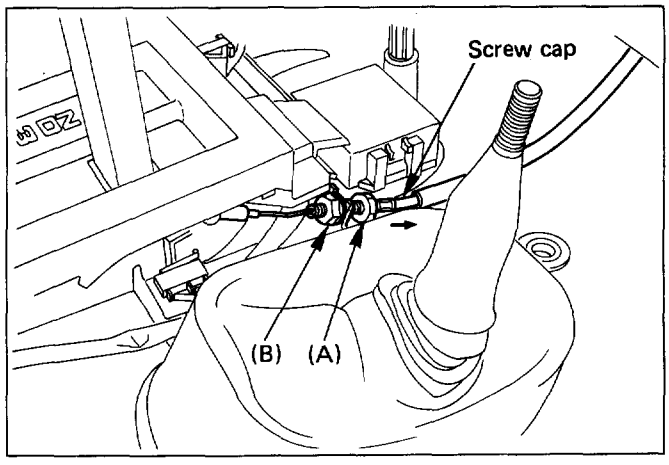

Fig. 7A-16d

(3) Make sure of proper operation of shift lock through checks as follows:
① Selector lever shall not be moved out of "P" position with IGN key in "Lock" position.
② Selector lever can be moved out of "P" position with IGN key in "ON" position only when brake pedal is depressed.
③ IGN key can be turned to "LOCK" position only when selector lever is in "P" position (key can be pulled out).

If ① and ③ fail, readjust cable. If ② fails, readjust connector wiring and brake pedal switch.

MODE SWITCH

REMOVAL

Preparation:
- Disconnect negative (–) battery cable.
- Place selector lever in neutral.

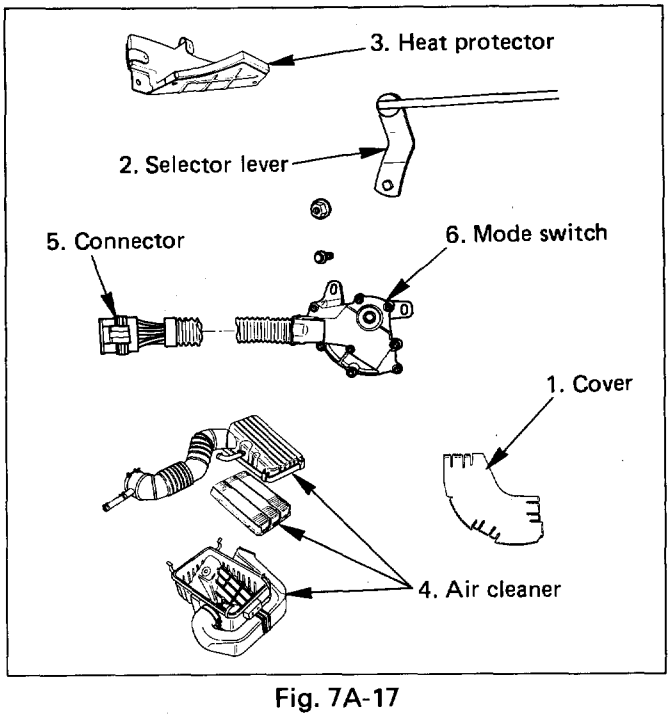

Fig. 7A-17

1. **Mode switch cover**
2. **Selector lever**
   - Disconnect selector lever from the mode switch.
3. **Heat protector**
   - Remove heat protector from the converter housing. (Fig. 7A-18).

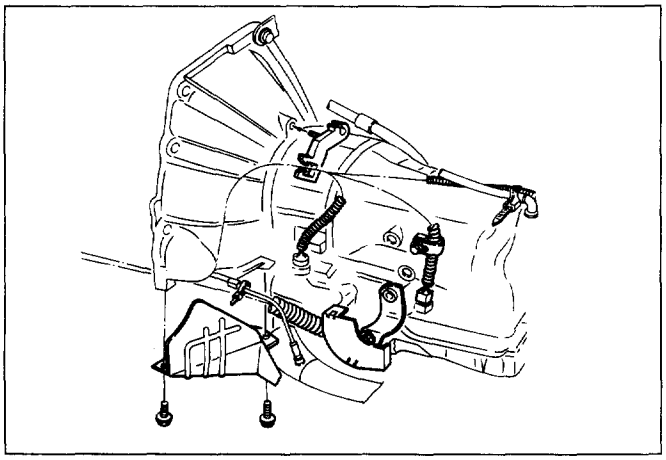

Fig. 7A-18

4. **Air cleaner assembly**
5. **Harness connector**
   - Disconnect mode switch connector from the engine harness.
   - Disconnect harness clip from the clip bracket of the engine (Fig. 7A-19).
6. **Mode switch**
   - Remove two mode switch bolts.

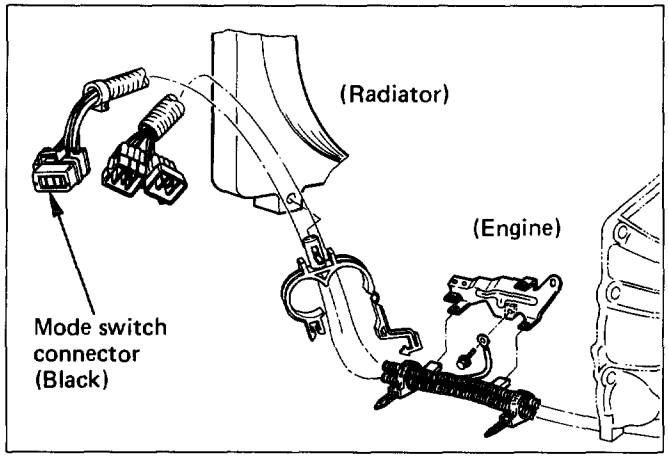

Fig. 7A-19

INSTALLATION

To install, follow the removal steps in the reverse order, noting the following points;

1. Torque

	N·m (lb·in)
Mode switch bolt	13(113)
Heat protector bolt	6 (52)
Selector lever nut	23 (17 lb·ft)

2. Mode switch setting procedure
   Perform either of the following adjustment procedures:
   1. (Fig. 7A-19a)
      a. Place selector lever in neutral.
      b. Remove selector lever from the mode switch.
      c. Remove the mode switch cover.
      d. Loosen the two 10 mm screws.
      e. Rotate the mode switch until the slot in the mode switch housing aligns with the selector shaft bushing, and insert a 3/32 in. (2.4 mm) drill bit or punch into the slot.
      f. Tighten the screws to 13 N·m (113 lb·in).
      g. After completing adjustment, snap the mode switch cover into place.
      h. Reinstall the selector lever.
   2. (Fig. 7A-19b)
      a. Place selector lever in neutral.
      b. Disconnect mode switch connector from vehicle harness.
      c. Connect multimeter (resistance mode) to terminals 1(E) and 4(H) on mode switch connector.
      d. Loosen two mounting screws.
      e. Rotate mode switch slightly in both directions to determine the range (approx. 5 degrees) of electrical contact.
      f. Position mode switch in middle of contact range.
      g. Tighten two mounting screws.
      h. Remove multimeter and reconnect harness.

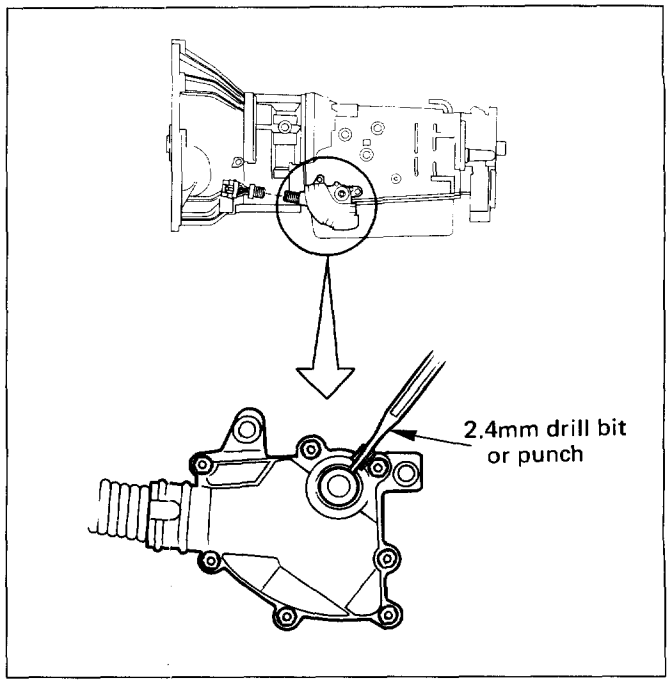

Fig. 7A-19a

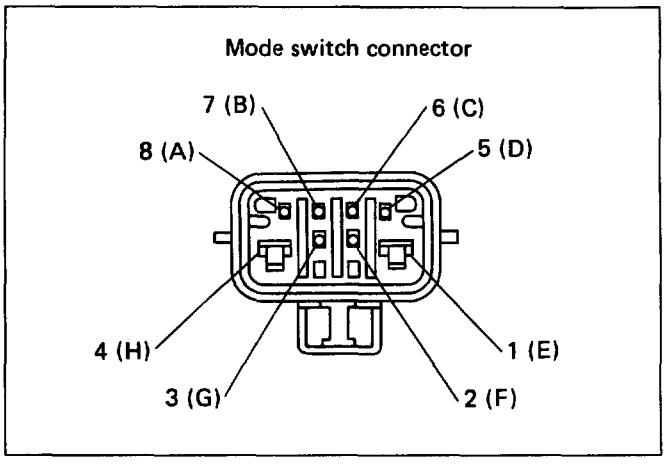

Fig. 7A-19b

TRANSMISSION (WITH TRANSFER CASE)

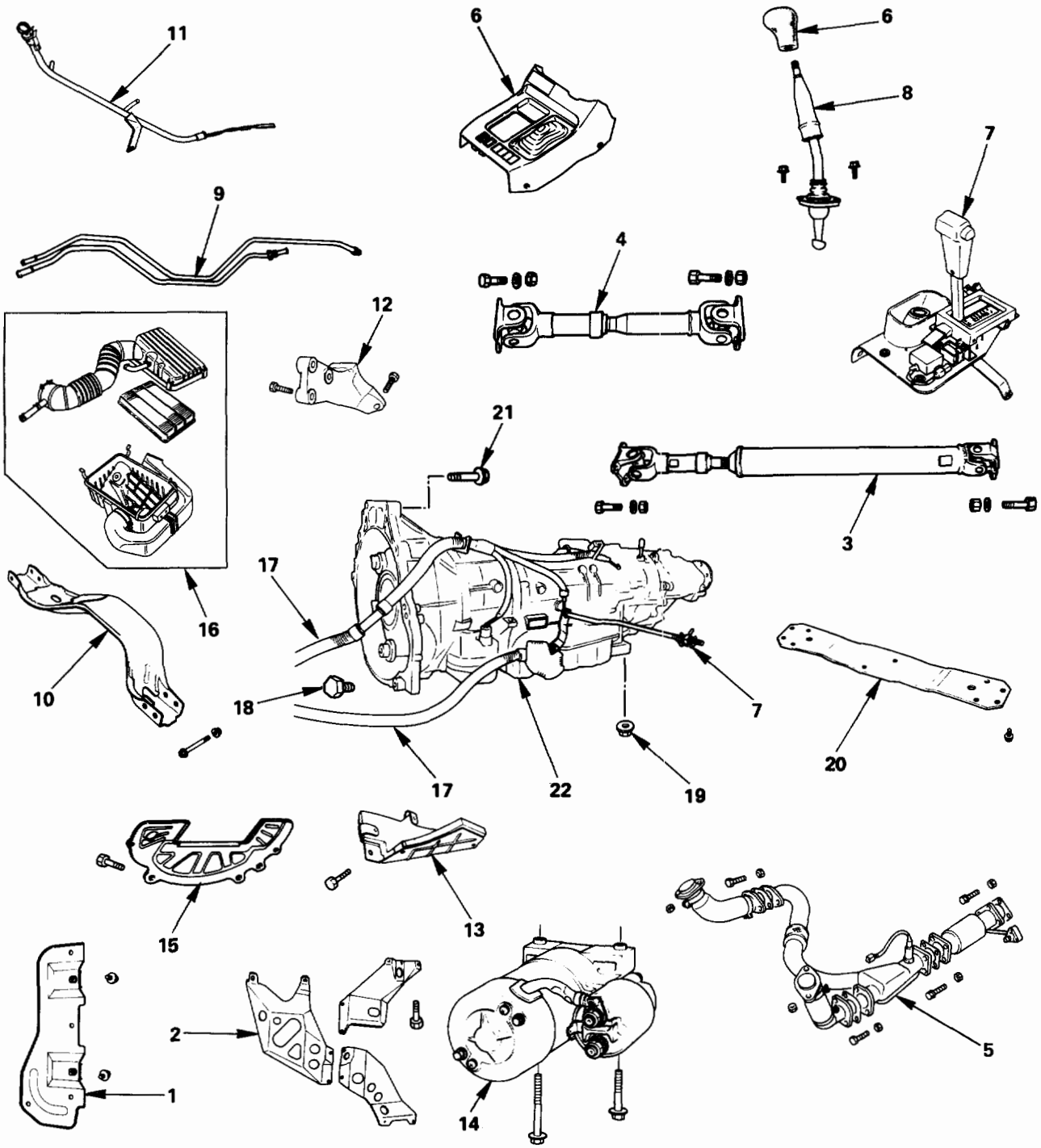

Removal steps

1. Skid plate
2. Exhaust and transfer pretectors
3. Rear propeller shaft
4. Front propeller shaft
5. Exhaust pipe
6. Front console
7. Selector lever assembly
8. Transfer control lever
9. Transmission oil cooler pipe
10. Front crossmember
11. Oil level gauge and guide tube
12. Stiffener
13. Heat protector
14. Starter
15. Flywheel under cover
16. Air cleaner assembly
17. Harness
18. Flywheel-Torque converter bolt
19. Rear mount nut
20. Third crossmember
21. Engine-transmission bolt
22. Transmission assembly

Installation steps

To install, follow the removal steps in the reverse order.

Fig. 7A-20

REMOVAL

Preparation:

- Remove engine hood.
- Disconnect negative (–) battery cable.

1. **Skid plate**
2. **Exhaust and transfer protectors**
3. **Rear propeller shaft**
4. **Front propeller shaft**
5. **Exhaust pipe**
   - Remove pre-catalytic converter, center pipe and front pipe.
   - Disconnect Oxygen Sensor (O2S) sensor connector from the transmission harness connector (Fig. 7A-21).

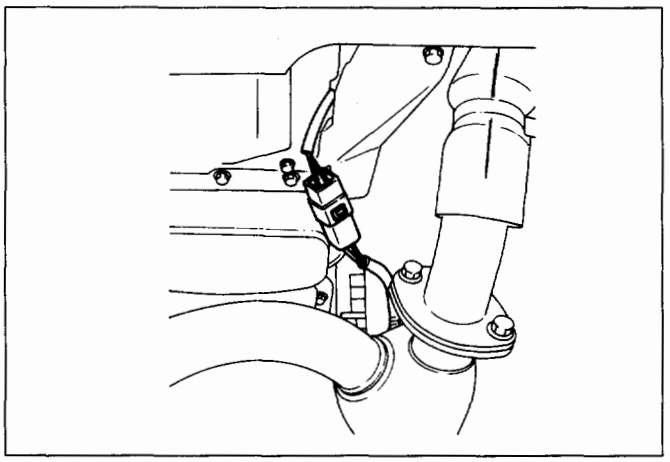

Fig. 7A-21

6. **Front console**
   - Remove transfer control lever knob.
   - Disconnect wiring harness connectors.
7. **Selector lever assembly**
   - Disconnect shift lock cable from the selector lever assembly side (Fig. 7A-22).
   - Disconnect wiring harness connectors.
   - Disconnect shift control rod from the selector lever assembly side (Fig. 7A-23).

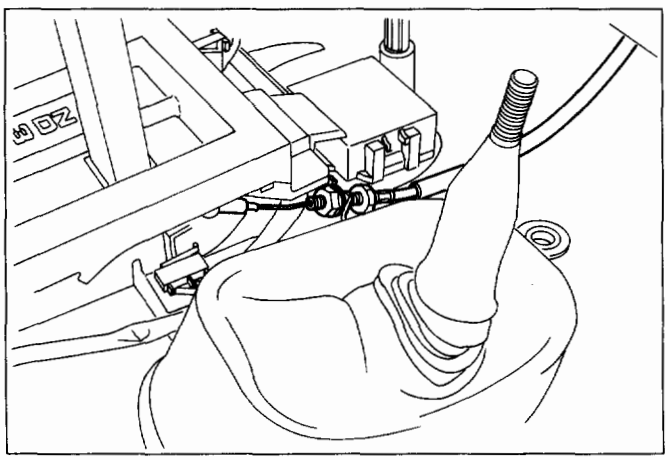

Fig. 7A-22

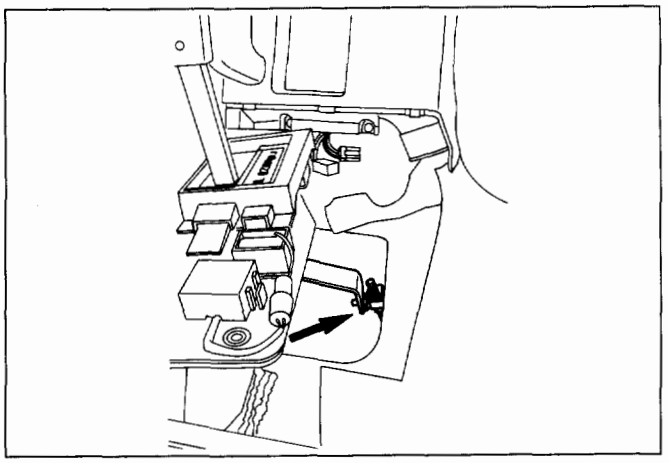

Fig. 7A-23

8. **Transfer control lever**
9. **Transmission oil cooler pipe**
   - Disconnect transmission oil cooler pipe from A/T side.
   - Remove oil pipe clamp bracket from engine stiffener (Fig. 7A-24).
   - Loosen oil pipe clamp bolt at the engine mount side.

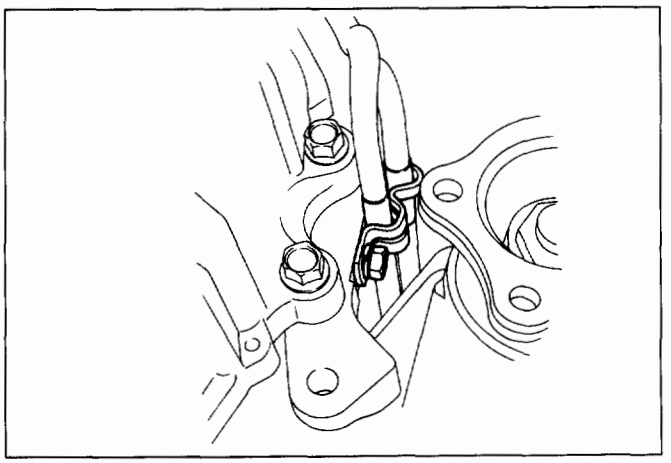

Fig. 7A-24

10. **Front crossmember**
11. **Oil level gauge and guide tube**
    - Disconnect breather hoses from guide tube.
12. **Stiffener**
    - Remove five stiffener bolts.
13. **Heat protector (Fig. 7A-25)**
14. **Starter**

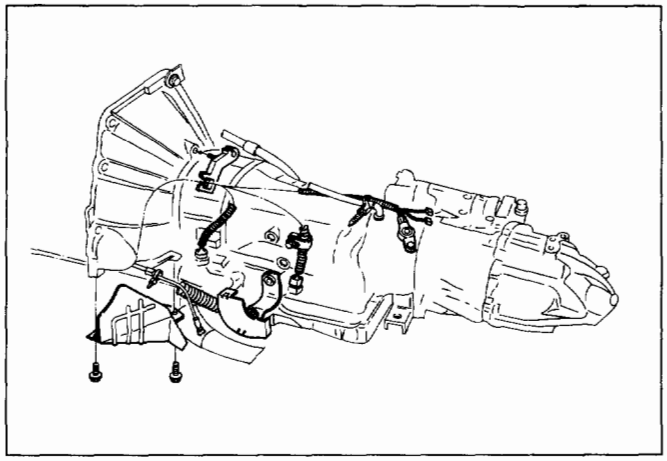

Fig. 7A-25

15. **Flywheel under cover**
    - Remove flywheel under cover from transmission case.
16. **Air cleaner assembly**
17. **Harness (Fig. 7A-26)**
    - Disconnect transmission harness connectors and mode switch harness connector from engine harness.
    - Disconnect harness clamp from engine clamp bracket.
    - Disconnect ground cable from engine.

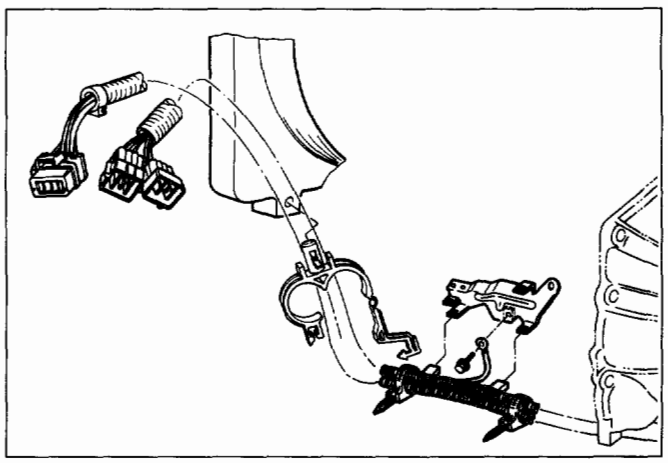

Fig. 7A-26

18. **Flywheel – Torque converter bolt**
    - Remove flywheel torque converter fixing bolts (3 pieces) by turning crankshaft.
19. **Rear Mount Nut**
    - Support transmission with a jack.
    - Remove two rear mount nuts from the 3rd crossmember side (Fig. 7A-27).

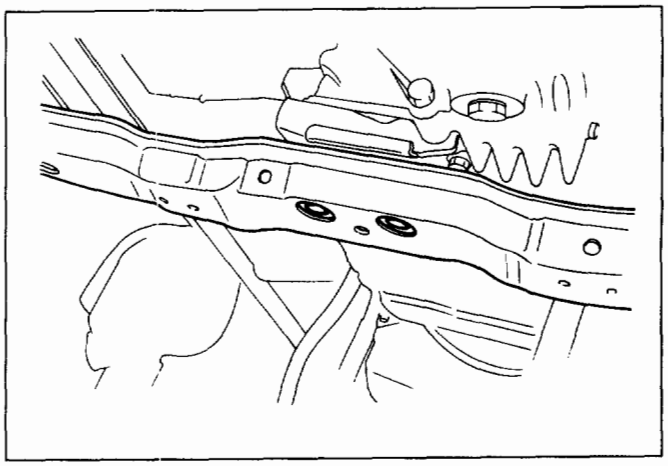

Fig. 7A-27

20. **Third crossmember**
    - Remove eight third crossmember bolts.
21. **Engine-transmission bolt**
    - Hoist engine with a chain block.
    - Remove engine-transmission bolts
22. **Transmission assembly**

INSTALLALTION

To install, follow the removal steps in the reverse order, noting the following points;

22. Transmission assembly

- Slowly raise transmission jack until front of the transmission is aligned with rear of the engine.

21. Engine-transmission bolt

- Tighten engine-transmission bolts, to the specified torque (Fig. 7A-28).

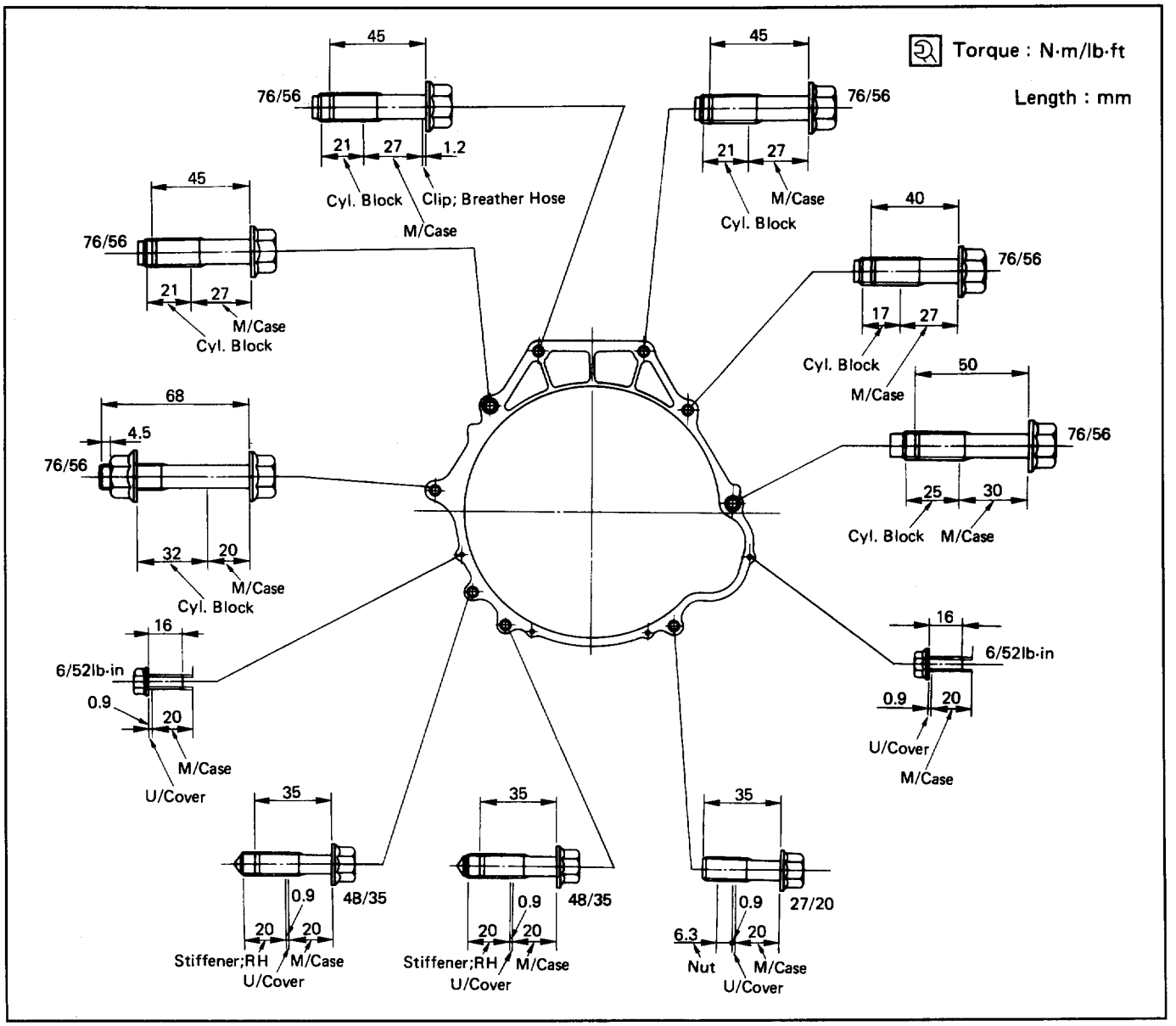

Fig. 7A-28

20. Third crossmember

Torque	N·m(lb·ft)	50 (37)

19. Rear mount nut

Torque	N·m(lb·ft)	41 (30)

18. Flywheel-torque converter bolt

- Align the flywheel-torque converter bolt boss with the starter portion of the converter housing by turning torque converter.
- Install flywheel-torque converter bolts (3 pieces) by turning crankshaft (Fig. 7A-29)

Torque	N·m(lb·ft)	54 (40)

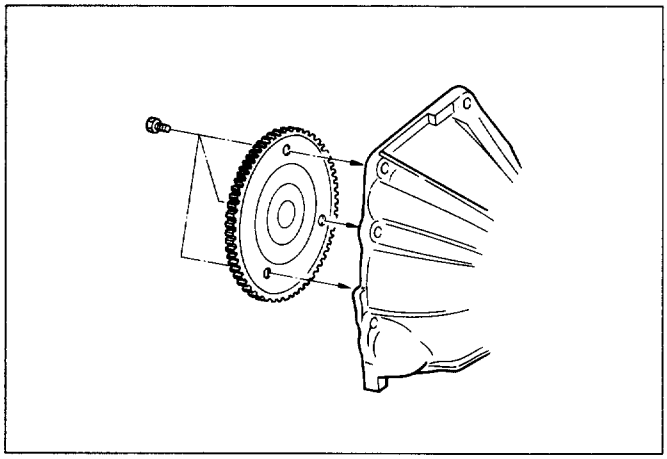

Fig. 7A-29

17. Harness (Fig. 7A-29a)

- Connect transmission and mode switch harness connectors to engine harness.
- Connect harness clamp to engine harness clamp bracket and radiator clip.
- Connect ground harness to engine.

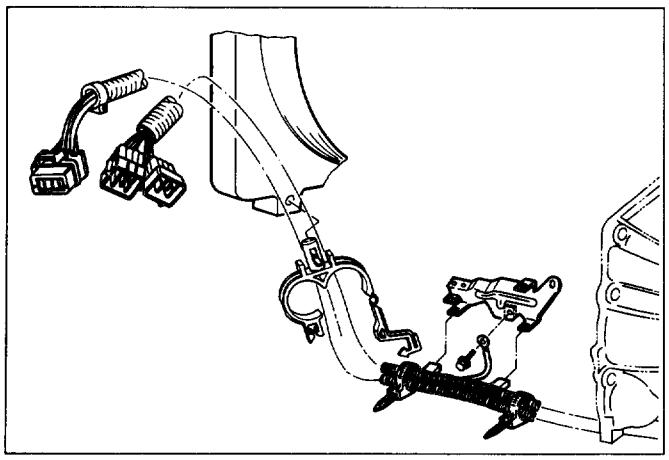

Fig. 7A-29a

16. Air cleaner assembly

15. Flywheel under cover

Torque	N·m(lb·in)	6 (52)

14. Starter

Torque	N·m(lb·ft)	40 (30)

13. Heat protector

Torque	N·m(lb·in)	6 (52)

12. Stiffener

Torque	N·m(lb·ft)	48 (35)

11. Oil lever gauge and guide tube

- Connect breather hoses to guide tube.

10. Front crossmember

Torque	N·m(lb·ft)	78 (58)

9. Transmission oil cooler pipe

- Install transmission oil cooler pipe to transmission.

Torque	N·m(lb·ft)	54 (40)

- Install oil pipe clamp bracket to engine stiffener.
- Tighten oil pipe clamp bolt at engine mount side.

8. Transfer control lever

7. Selector lever assembly

- Connect shift control rod to selector lever assembly.
- Connect wiring harness connectors.
- Connect shift lock cable to selector lever assembly.

6. Front console

- Connect wiring harness connectors.
- Install transfer control lever knob.

5. Exhaust pipe

Torque	N·m(lb·ft)
Exh. pipe to exh. manifold	67 (49)
Center pipe front side bolt	43 (32)
Pre-catalytic converter bolt	43 (32)

- Connect Oxygen Sensor (O2S) connector to transmission harness connector.

4. Front propeller shaft

3. Rear propeller shaft

Torque	N·m(lb·ft)	63 (46)

2. **Exhaust and transfer protectors**

Torque	N·m(lb·ft)	37 (27)

1. **Skid plate**
   - Connect negative (–) battery cable.
   - Install engine hood.
   - Adjust shift lock cable.
     Refer to "Selector lever" in this section.

SOLENOID VALVE (MAIN CASE VALVE BODY)

REMOVAL

Preparation:
- Disconnect negative (-) battery cable.
- Remove exhaust protector and exhaust pipe.

1. **Main case oil pan**
   - Remove sixteen 10 mm screws, main case oil pan, magnet, and gasket.
   - Drain fluid.
     Refer to "CHANGING TRANSMISSION FLUID".
2. **Oil filter**
   - Remove three 13 mm screws, oil filter.
3. **Wiring harness**
   - Disconnect wiring harness from band control solenoid, shift solenoids and main case 4 pin connector. Pull only on connectors, not on wiring harness.
4. **Spring pin (Fig. 7A-29b and 7A-29c)**
   - Remove spring pin for 1-2/3-4 shift solenoid, 2-3 shift solenoid, and band control solenoid respectively, using suitable pliers taking care not to damage solenoids.

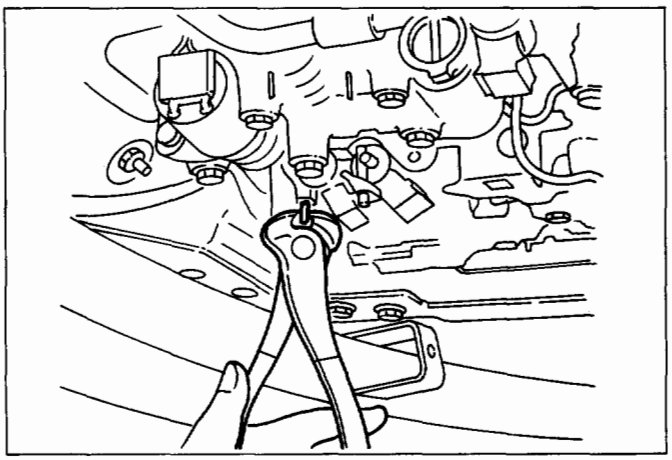

Fig. 7A-29b

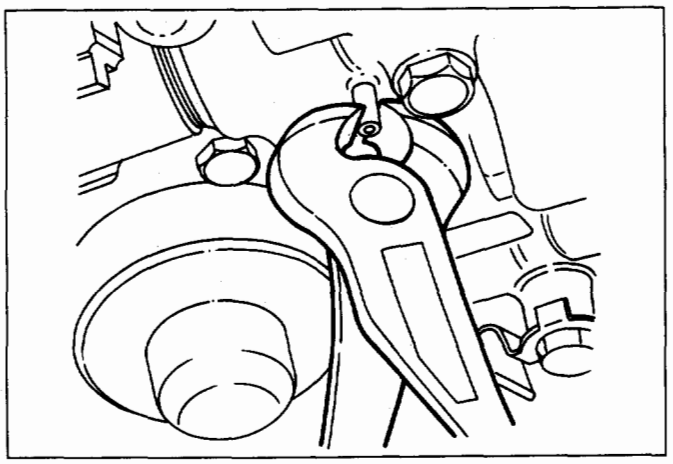

Fig. 7A-29c

5. **Solenoids**
   - Remove 1-2/3-4 shift solenoid, 2-3 shift solenoid, band control solenoid, and gaskets from main case valve body. Do not pull on wiring harness. Remove solenoids by grasping the metal tip.

INSTALLATION

To install, follow the removal steps in the reverse order, noting the following points;

5. **Solenoids**
   - Install 1-2/3-4 shift solenoid, 2-3 shift solenoid, band control solenoid with new gaskets to main case valve body respectively.
4. **Spring pin (Fig. 7A-29d)**
   - Carefully install spring pin with hammer to avoid damage to valve body etc.
3. **Wiring harness**
   - Connect wiring harness to solenoids and main case 4 pin connector.
2. **Oil filter**
   - Install oil filter with new gasket, three 13 mm screws.

Torque	N·m(lb·ft)	20 (15)

1. **Main case oil pan**
   - Install magnet, main case oil pan with new gasket, sixteen 10 mm screws.

Torque	N·m(lb·in)	11 (96)

- Fill transmission through the oil filler tube, using ATF DEXRON®-III.
- Install exhaust protector and exhaust pipe.
- Connect negative (–) battery cable.

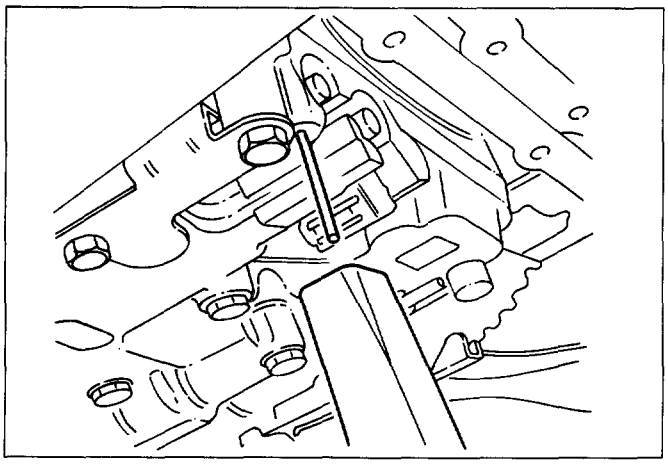

Fig. 7A-29d

SOLENOID VALVE (ADAPTER CASE VALVE BODY)

REMOVAL

Preparation:

- Disconnect negative (–) battery cable.
- Remove exhaust protector and exhaust pipe.
- Drain fluid.
- Refer to "CHANGING TRANSMISSION FLUID".

1. **Adapter case oil pan**
   - Remove twelve 10 mm screws, adapter case oil pan, and gasket.

   NOTE:
   Oil pan still contains transmission fluid. Place a large drain container under the oil pan.
   Drain the fluid carefully.

2. **Wiring harness**
   - Disconnect wiring harness from force motor solenoid, converter clutch solenoid and 5 pin connector of adapter case. Pull only on connectors, not on wiring harness.

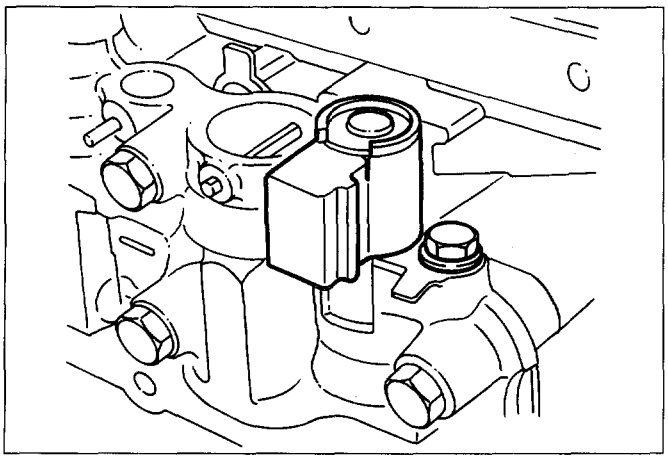

Fig. 7A-29e

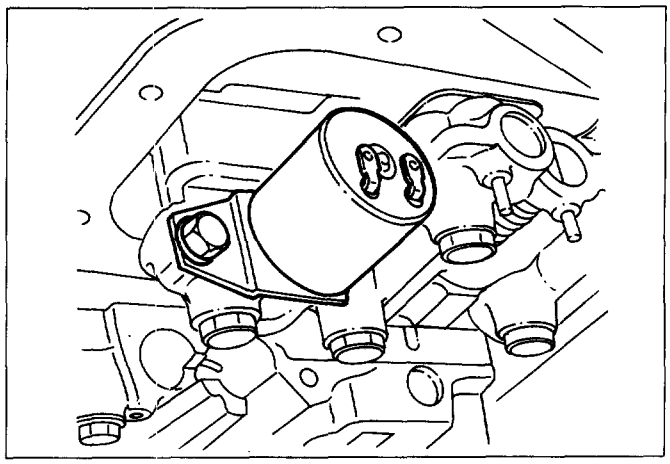

Fig. 7A-29f

3. **Solenoid (Fig. 7A-29e and 7A-29f)**
   - Remove 11 mm bolt and converter clutch solenoid with two O-rings.
   - Remove 11 mm bolt, retainer, and force motor solenoid.

INSTALLATION

To install, follow the removal steps in the reverse order, noting the following points;

3. **Solenoid**
   - Install force motor solenoid, retainer, and 11 mm bolt to adapter case valve body.

Torque	N·m(lb·in)	10 (87)

   - Install converter clutch solenoid with two O-rings, and 11 mm bolt to adapter case valve body.

Torque	N·m(lb·in)	10 (87)

2. **Wiring harness**
   - Connect wiring harness assembly to solenoids and 5 pin connector of adapter case.

1. **Adapter case oil pan**
   - Install adapter case oil pan, new gasket, and twelve 10 mm screws.

Torque	N·m(lb·in)	11 (96)

   - Fill transmission through the oil filter tube, using ATF DEXRON®-III.
   - Install exhaust protector and exhaust pipe.
   - Connect negative (–) battery cable.

VALVE BODY ASSEMBLY (MAIN CASE)

REMOVAL

Preparation:
- Disconnect negative (–) battery cable.
- Remove exhaust protector and exhaust pipe.

1. **Main case oil pan**
   - Remove sixteen 10 mm screws, main case oil pan, magnet and gasket.
   - Drain fluid.
     Refer to "CHANGING TRANSMISSION FLUID".
2. **Oil filter**
   - Remove three 13 mm screws, oil filter.
3. **Manual detent**
   - Remove two 13 mm screws, roller and spring assembly.
4. **Wiring harness**
   - Disconnect wiring harness from band control solenoid, shift solenoids and main case 4 pin connector. Pull only on connectors, not on wiring harness.
5. **Servo cover**
   - Remove four 13 mm screws, servo cover and gasket.
6. **Main case valve body**
   - Remove seven 13 mm valve body screws.
   - Remove main valve body assembly with manual valve link and transfer plate.

   NOTE:
   Note the position of link, with the long end into valve, short end into range selector lever.
   - Remove transfer plate gasket from main case.
   - Remove two check balls from main case.

INSTALLATION

To install, follow the removal steps in the reverse order, noting the following points;

6. **Main case valve body**
   - Install two check balls (Fig. 7A-29g).
   - Inspect electrical 4 pin connector and seal of main case. Replace if necessary.
   - Install two guide pins into main case.

   Guide pin: J-25025-B

   - Install valve body complete assembly and manual valve link.

   NOTE:
   Valve must be extended as the short end of manual valve link is connected to the range selector lever. Long end of link goes into valve.

   - Install seven 13 mm screws (Fig. 7A-29h).

Torque N·m(lb·ft)	20 (15)

   - Remove two guide pins.

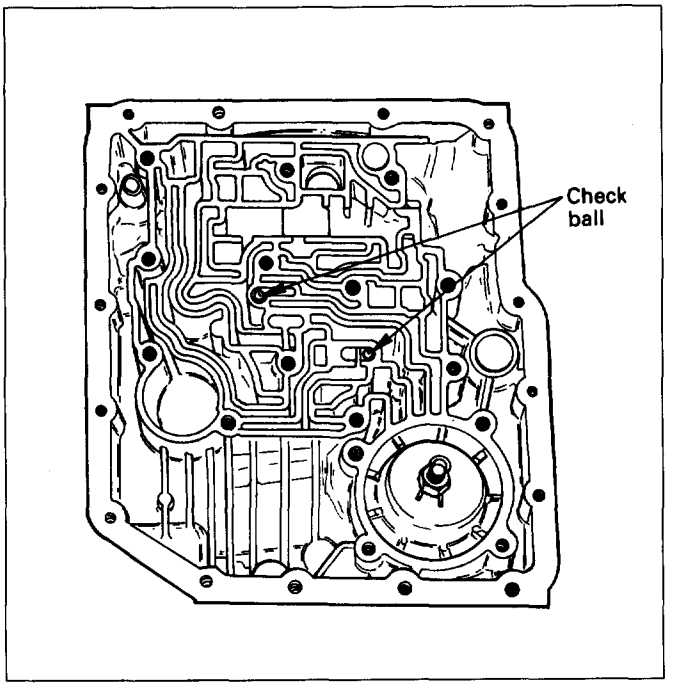

Fig. 7A-29g

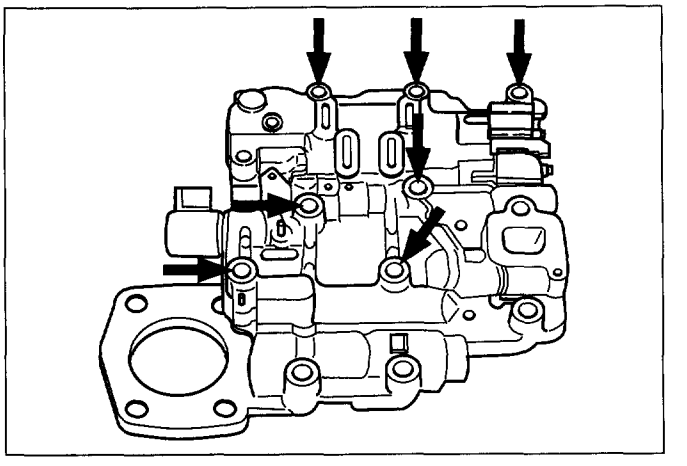

Fig. 7A-29h

5. **Servo cover**
   - Install servo cover gasket, cover and four 13 mm screws.

Torque N·m(lb·ft)	25 (18)

4. **Wiring harness**
   - Connect harness to band control and shift solenoids.
   - Connect 4 pin connector to main case connector.

3. **Manual detent**
   - Install roller and spring assembly.
   - Install two 13 mm screws.

Torque	N·m(lb·ft)	20 (15)

2. **Oil filter**
   - Install oil filter and three 13 mm screws.

Torque	N·m(lb·ft)	20 (15)

1. **Main case oil pan**
   - Install oil pan gasket, magnet, oil pan and sixteen 10 mm screws.

Torque	N·m(lb·in)	11 (96)

- Fill transmission through the oil filler tube, using ATF DEXRON®-III.
- Install exhaust pipe and exhaust protector.
- Connect negative (–) battery cable.

VALVE BODY ASSEMBLY (ADAPTER CASE)

REMOVAL

Preparation:
- Disconnect negative (–) battery cable.
- Remove exhaust protector and exhaust pipe.
- Drain fluid.
- Refer to "CHANGING TRANSMISSION FLUID".

1. **Adapter case oil pan**
   - Remove twelve 10 mm screws, adapter case oil pan and gasket.

   NOTE:
   Oil pan still contains transmission fluid. Place a large drain container under the oil pan.
   Drain the fluid carefully.
2. **Wiring harness**
   - Disconnect wiring harness from force motor solenoid, converter clutch solenoid and 5 pin connector of adapter case. Pull only on connectors, not on wiring harness.
   - Remove wiring harness.
3. **Adapter case valve body**
   - Seven 13 mm screws, adapter case valve body assembly, transfer plate and two gaskets.

INSTALLATION

To install, follow the removal steps in the reverse order, noting the following points;

3. **Adapter case valve body**
   - Inspect electrical 5 pin connector and seal of adapter case. Replace if necessary.
   - Install wiring harness assembly in bottom of adapter case.
   - Install gasket, transfer plate and gasket.
   - Install adapter case valve body complete and seven 13 mm screws.

Torque	N·m(lb·ft)	20 (15)

2. **Wiring harness**
   - Connect harness assembly to converter clutch solenoid and force motor.
1. **Adapter case oil pan**
   - Install oil pan gasket, oil pan and twelve 10 mm screws.

Torque	N·m(lb·in)	11 (96)

- Fill transmission through the oil filter tube, using ATF DEXRON®-III.
- Install exhaust pipe and exhaust protector.
- Connect negative (–) battery cable.

TRANSMISSION CONTROL MODULE (TCM)

REMOVAL

Preparation:

- Disconnect negative (–) battery cable.

1. **Wiring harness connector**
   - Disconnect TCM wiring harness connector from TCM.
2. **TCM**
   - Remove four TCM retaining nuts and TCM from driver compartment (Fig. 7A-29i)

INSTALLATION

To install, follow the removal steps in the reverse order.

2. **TCM**
   - Install TCM and four TCM retaining nuts.
1. **Wiring harness connector**
   - Connect TCM wiring harness connectors to TCM.
   - Connect negative (–) battery cable.

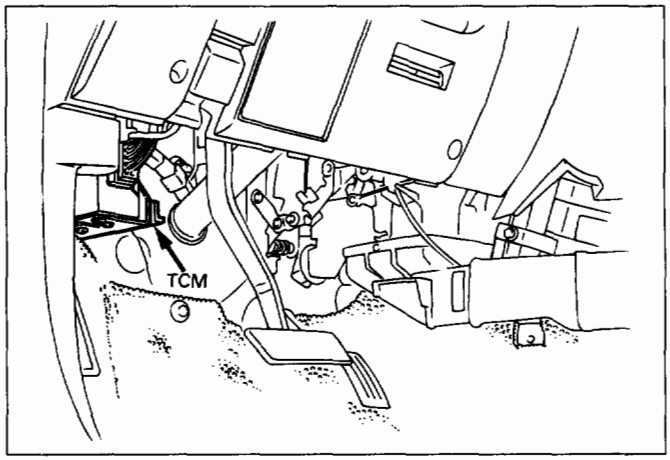

Fig. 7A-29i

SPEED SENSOR (EXTENSION HOUSING)

REMOVAL

Preparation:

- Disconnect negative (–) battery cable.

1. **Wiring harness connector**
   - Disconnect speed sensor harness connector from speed sensor.
2. **Speed sensor**
   - Remove one 10 mm screw and speed sensor with O-ring (Fig. 7A-29j).

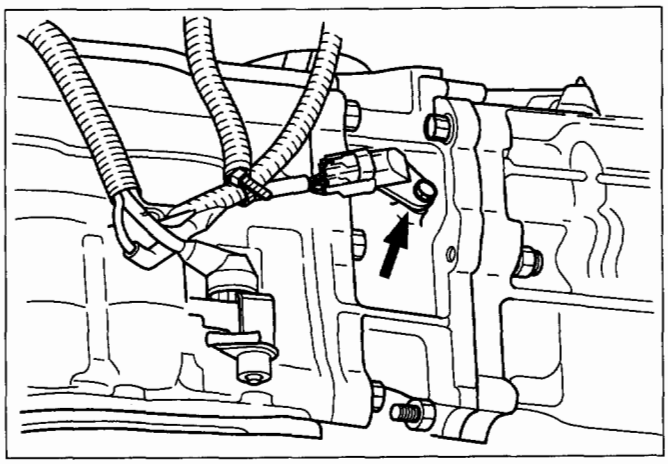

Fig. 7A-29j

INSTALLATION

To install, follow the removal steps in the reverse order.

2. **Speed sensor**
   - Inspect speed sensor O-ring. Replace if necessary.
   - Install speed sensor assembly and 10 mm screw.

Torque	N·m(lb·in)	9 (78)

1. **Wiring harness connector**
   - Connect speed sensor harness connector to speed sensor.
   - Connect negative (–) battery cable.

TRANSMISSION OIL TEMPERATURE SENSOR (ADAPTER CASE)

REMOVAL

Preparation:
- Disconnect negative (–) battery cable.
- Remove exhaust protector and exhaust pipe.
- Drain fluid.
- Refer to "CHANGING TRANSMISSION FLUID".

1. **Adapter case oil pan**
   - Remove twelve 10 mm screws, adapter case oil pan and gasket (Fig. 7A-29k).

   NOTE:
   Oil pan still contains transmission fluid. Place a large drain container under the oil pan.
   Drain the fluid carefully.

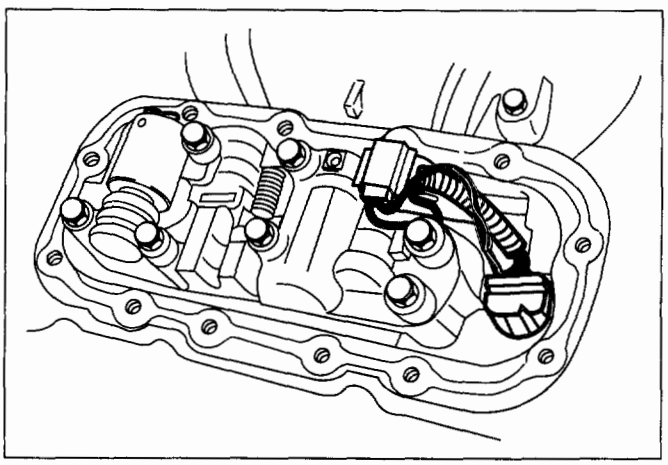

Fig. 7A-29k

2. **Wiring harness**
   - Disconnect wiring harness from force motor solenoid, converter clutch solenoid and 5 pin connector of adapter case. Pull only on connectors, not on wiring harness.
   - Remove wiring harness assembly (transmission oil temperature sensor).

INSTALLATION

To install, follow the removal steps in the reverse order, noting the following points;

2. **Wiring harness**
   - Install harness assembly to converter clutch solenoid, force motor and 5 pin connector of adapter case.
1. **Adapter case oil pan**
   - Install oil pan gasket, oil pan and twelve 10 mm screws.

Torque N·m(lb·in)	11 (96)

   - Fill transmission through the oil filter tube, using ATF DEXRON®-III.
   - Install exhaust pipe and exhaust protector.
   - Connect negative (–) battery cable.

FRONT OIL SEAL (CONVERTER HOUSING)

REMOVAL

Preparation:
- Remove engine hood.
- Disconnect negative (–) battery cable.

1. **Transmission assembly**
   - Remove transmission assembly with transfer case from the vehicle.
     Refer to "TRANSMISSION (WITH TRANSFER CASE)".
2. **Torque converter**
   - Remove torque converter from converter housing.
3. **Oil seal ring (Fig. 7A-29l)**
   - Remove three screws.
   - Remove oil seal ring from converter housing.

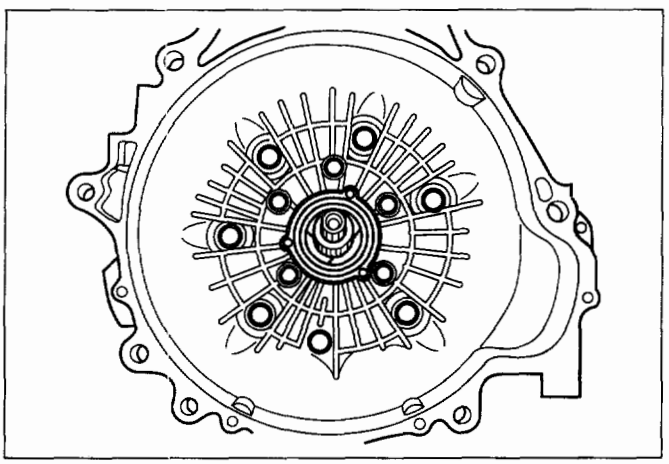

Fig. 7A-29l

INSTALLATION

To install, follow the removal steps in the reverse order, noting the following points;

3. **Oil seal ring**
   - Apply clean ATF to the new oil seal ring lip.
   - Install oil seal ring to converter housing.

Torque N·m(lb·in)	3 (26)

2. **Torque converter**
   - Install torque converter to converter housing.
1. **Transmission assembly**
   - Install transmission assembly with transfer case to the vehicle.
     Refer to "TRANSMISSION (WITH TRANSFER CASE)".
   - Connect negative (–) battery cable.
   - Install engine hood.
   - Adjust shift lock cable.
     Refer to "Selector lever" in this section.
   - Inspect transmission fluid level.

REAR OIL SEAL (EXTENSION HOUSING)

REMOVAL

Preparation:

- Disconnect negative (–) battery cable.

1. **Transfer case assembly**
   - Remove transfer case assembly from the vehicle.
     Refer to "SECTION 7D TRANSFER CASE (A/T)".
2. **Rear oil seal**
   - Remove rear oil seal from transmission extension housing (Fig. 7A-29m).

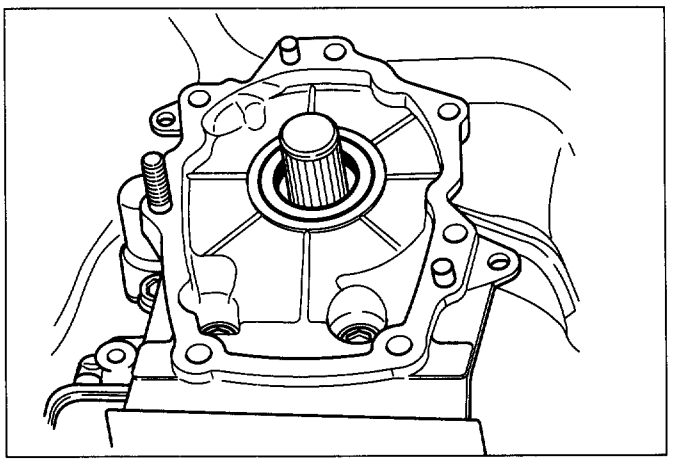

Fig. 7A-29m

INSTALLATION

To install, follow the removal steps in the reverse order, noting the following points;

2. **Rear oil seal**
   - Install rear oil seal to transmission extension housing.

Extension housing oil seal installer: J-36797

1. **Transfer case assembly**
   - Install transfer case assembly to the vehicle.
     Refer to "SECTION 7D TRANSFER CASE (A/T)".
   - Connect negative (–) battery cable.
   - Inspect transmission fluid level.

MEMO

UNIT REPAIR

TRANSMISSION (4L30-E)

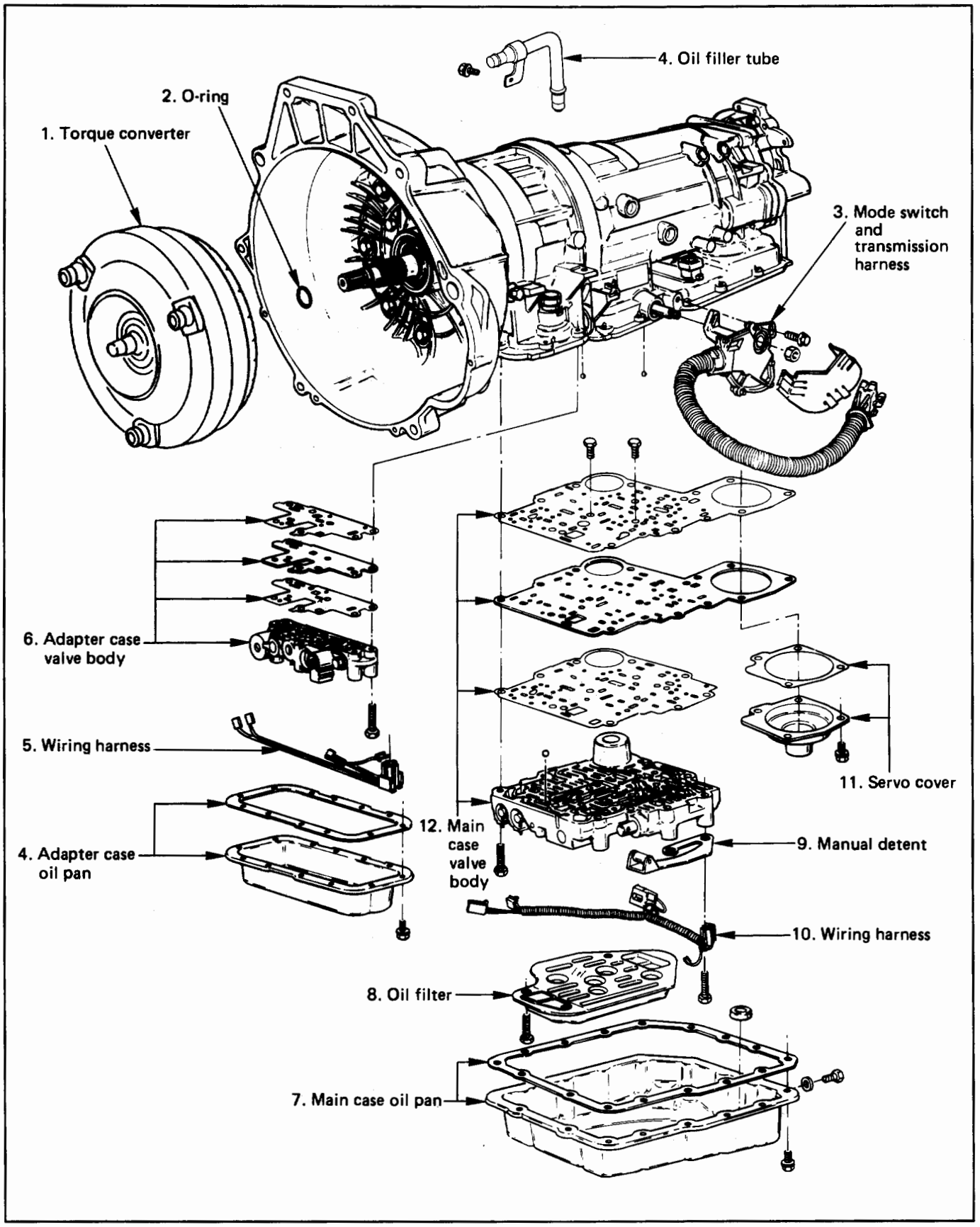

Fig. 7A-30

DISASSEMBLY

During the disassembly and reassembly of the following components, perform the following:

- Wash each part thoroughly and blow air through each oil passage and groove to eliminate blockage.
- Seal rings, roll pins and gaskets should be replaced with new parts.
- When assembling the components, apply DEXRON®-III Automatic Transmission Fluid (ATF) to each seal, rotating part and sliding part.
- Do not dip those parts having a facing, such as drive plate for clutch or brake, in the cleaner when washing it with solvent.
  Also, always wash it with new ATF two or three times after cleaning with solvent.

1. **Torque converter (Fig. 7A-30)**
   - Drain fluid from torque converter.
   - Attach holding fixture to the transmission and set it on holding fixture base (Fig. 7A-31).
     Holding fixture: J-8763-02
     Fixture base: J-3289-20

NOTE:
Do not overtighten the tool, as case damage may result.

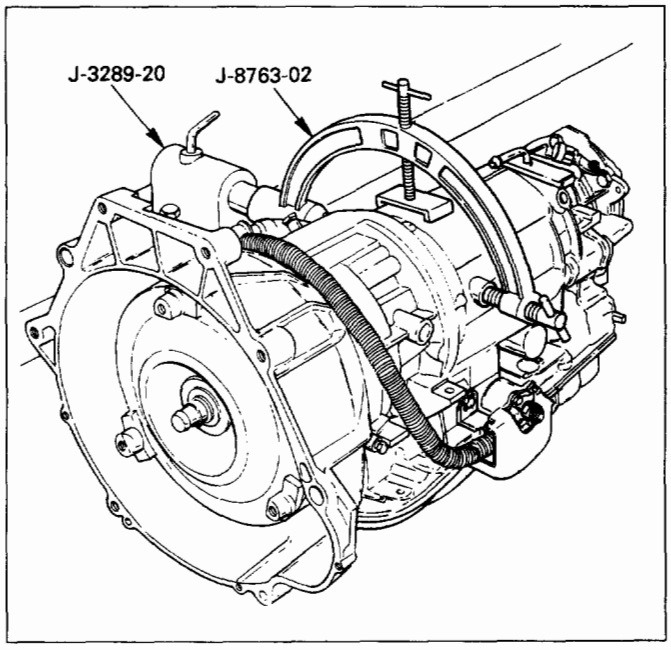

Fig. 7A-31

2. **O-ring (Fig. 7A-30)**
   - Remove O-ring from turbine shaft.
3. **Mode switch and transmission harness (Fig. 7A-30)**
   - Remove two 10mm screws, cover and mode switch.
   - Remove transmission harness.
4. **Adapter case oil pan (Fig. 7A-30)**
   - Remove twelve 10mm screws, adapter oil pan, and gasket.
   - Remove oil filler tube.
5. **Wiring harness (Fig. 7A-30)**
   - Disconnect electrical connections from solenoids. Pull on connectors only, not on wiring harness.
6. **Adapter case valve body (Fig. 7A-30)**
   - Seven 13mm screws, adapter case valve body assembly, transfer plate and two gaskets.
   - Remove wiring harness and 5 pin connector.
7. **Main case oil pan (Fig. 7A-30)**
   - Remove sixteen 10mm screws, main oil pan, magnet, and gasket.
8. **Oil filter (Fig. 7A-30)**
   - Remove three 13mm screws, oil filter.
9. **Manual detent (Fig. 7A-30)**
   - Remove two 13mm screws, roller & spring and manual detent.
10. **Wiring harness (Fig. 7A-30)**
    - Disconnect harness assembly from band apply solenoid, shift solenoids and main case 4 pin connector.
    - Remove 4 pin connector.
11. **Servo cover (Fig. 7A-30)**
    - Remove four 13mm screws, servo cover and gasket.
12. **Main case valve body (Fig. 7A-30)**
    - Remove seven 13mm valve body screws.
    - Remove main valve body assembly with manual valve link and transfer plate.

NOTE:
Note the position of link, with the long end into valve, short end into range selector lever.

- Remove gasket transfer plate from main case.
- Remove two check balls from main case.

13. **Servo Piston (Fig. 7A-32)**
    - Turn transmission to vertical position to drain fluid. Return back to horizontal position when drained.
    - Install servo piston spring compressor with offset to the rear of case.
    - Compress servo piston assembly.
    - Remove servo piston retaining ring.
    - Slowly release servo piston assembly.
    - Remove tool.
    - Remove servo piston assembly, return spring, and servo apply rod.
    Servo piston spring compressor: J-23075

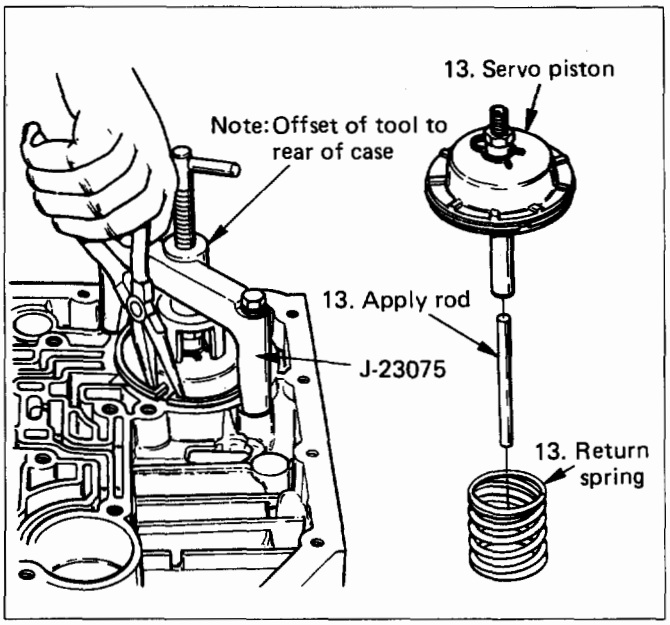

Fig. 7A-32

14. Speed sensor (Fig. 7A-33)
- Rotate transmission to horizontal position, pan side down.
- Remove one 10mm screw, and speed sensor with "O" ring.

15. Extension housing (Fig. 7A-33)
- Remove seven 8mm hexagon socket head screws, extension assembly, and gasket.
- Remove retaining ring.

NOTE:
Use extra long nose pliers.
- Remove speed wheel.
- Remove wheel parking lock (with seal ring).

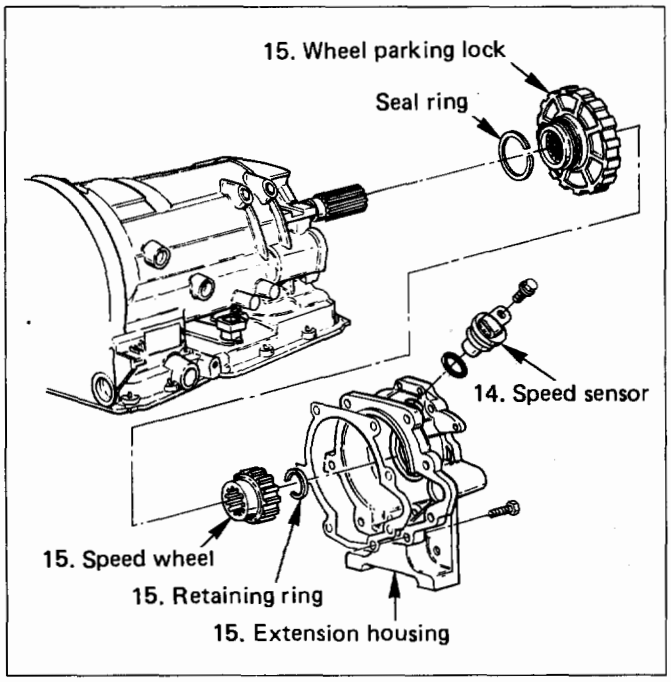

Fig. 7A-33

16. Converter housing and oil pump assembly (Fig. 7A-34)
- Rotate transmission to vertical position, converter housing up.
- Loosen, but not remove, five 13 mm inner screws if oil pump disassembly required.
- Remove seven outer screws.
- Remove converter housing and oil pump assembly.
- Remove gasket.
- Remove selective thrust washer.

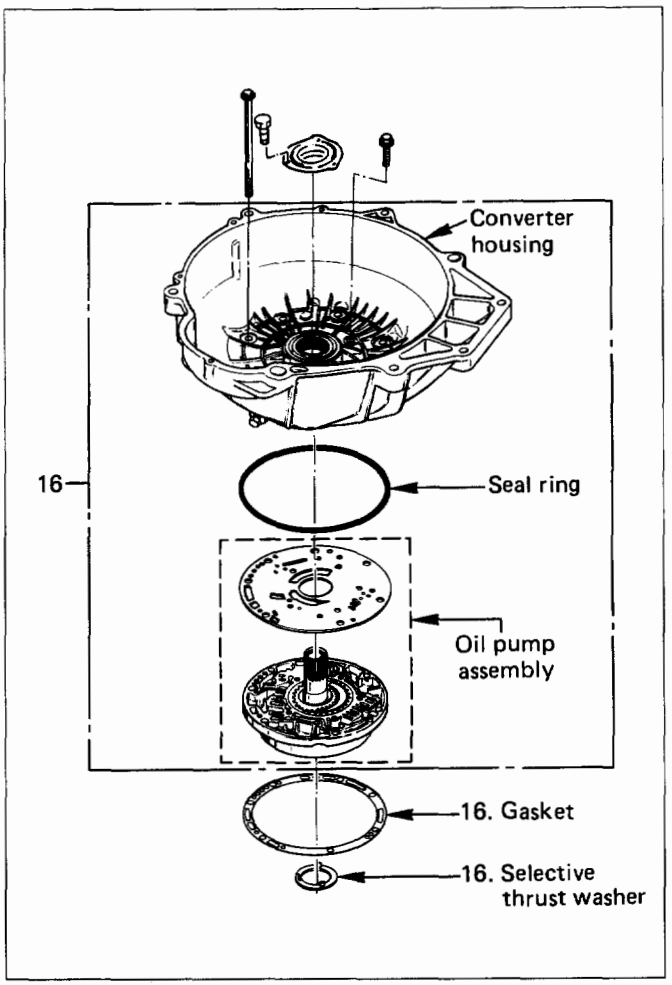

Fig. 7A-34

17. Fourth clutch retainer (Fig. 7A-35)
- Remove fourth clutch retainer.

18. Turbine shaft and clutch plates (Fig. 7A-35)
- Grasp turbine shaft and lift out the overrun clutch housing assembly and fourth clutch plates.

19. Thrust bearing assembly (Fig. 7A-35)
- Remove thrust bearing assembly.

20. Overdrive internal gear (Fig. 7A-35)
- Remove overdrive internal gear.

21. Thrust washer (Fig. 7A-35)
- Remove thrust washer.

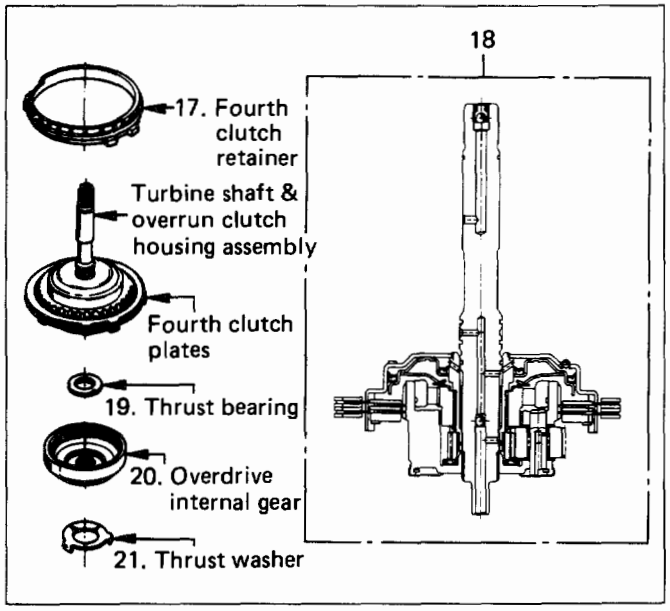

Fig. 7A-35

22. Adapter case and center support assembly. (Fig. 7A-36)
- Remove adapter case and center support assembly (with fourth clutch piston).
- Remove seal ring.
- Remove selective thrust washer and two O-ring seals from main case.

23. Fourth clutch spring retainer (Fig. 7A-36)
- Compress the fourth clutch spring retainer and springs.
- Release snap ring from groove.
- Remove clutch compressor and snap ring.
- Remove retainer and spring assembly.

Compressor: J-23327 and J-23327-90

24. Fourth clutch piston (Fig. 7A-36)
- Insert two converter housing/main case screws to hold adapter case while pulling out fourth clutch piston.
- Remove fourth clutch piston assembly.
- Remove converter housing/main case screws.

25. Second and third clutch assemblies (Fig. 7A-36)
- Grasp intermediate shaft, twist and pull out the second and third clutch drum assemblies with reverse clutch plates while holding onto output shaft.
- Separate second and third clutch assemblies.
- Remove thrust washer.
- Remove reverse clutch plates and reverse clutch pressure plate.

26. Planetary carrier assembly (Fig. 7A-36)
- Remove bearing and washer.
- Remove planetary carrier assembly.
- Remove thrust bearing.

27. Reaction sun gear (Fig. 7A-36)
- Remove reaction sun gear
- Remove needle bearing.

28. Brake drum
- Remove brake drum.

29. Brake band
- Remove brake band.
- Remove thrust bearing.

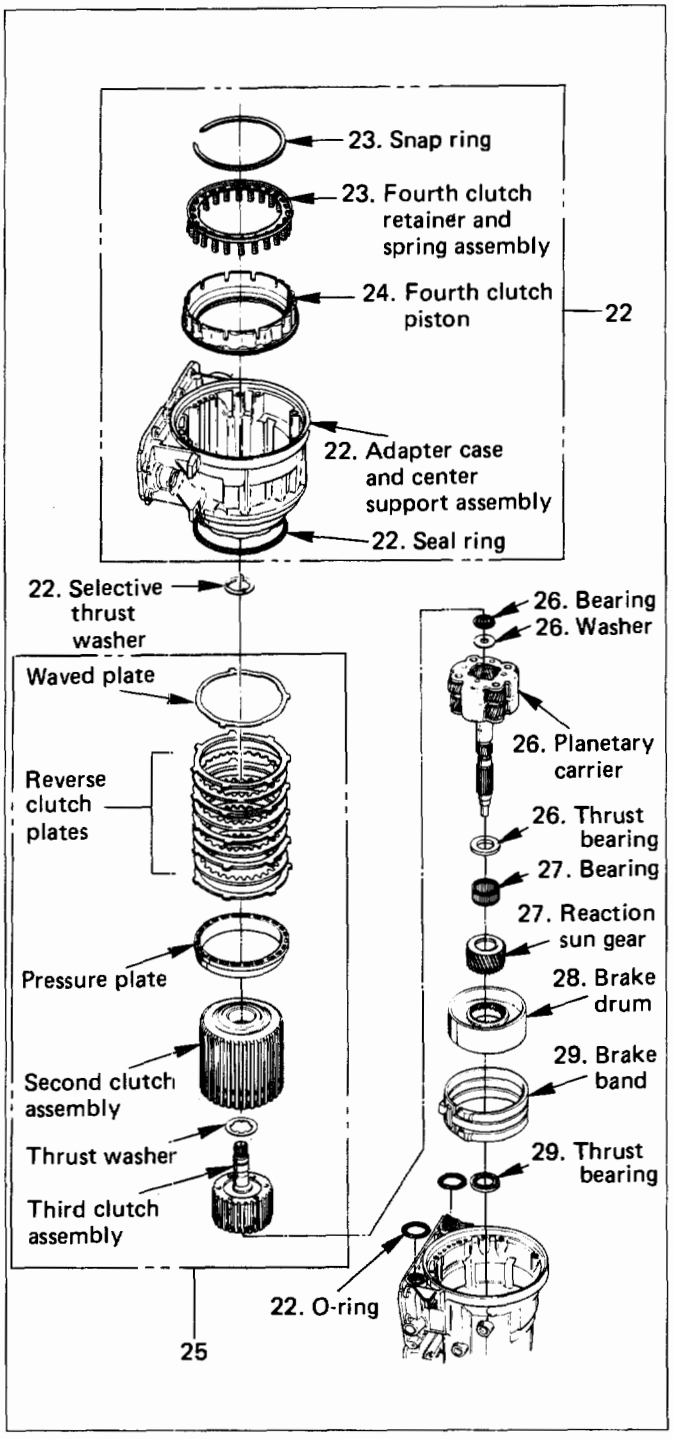

Fig. 7A-36

30. Parking lock and selector lever assembly (Fig. 7A-37)

- Rotate case to horizontal position, valve body side facing up.
- Remove spring pin, using cutting pliers.

NOTE:
Insert wire in the center of the spring pin to prevent it from collapsing during removal. Be aware of pin height. Protect machined face of main case.

- Remove parking lock and range selector lever 17 mm nut.
- Remove parking lock and range selector lever and actuator assembly.
- Remove selector shaft.

NOTE:
Inspect the shaft for burrs before removing to prevent damaging seal. If necessary, remove burrs by lightly sanding with an oilstone.

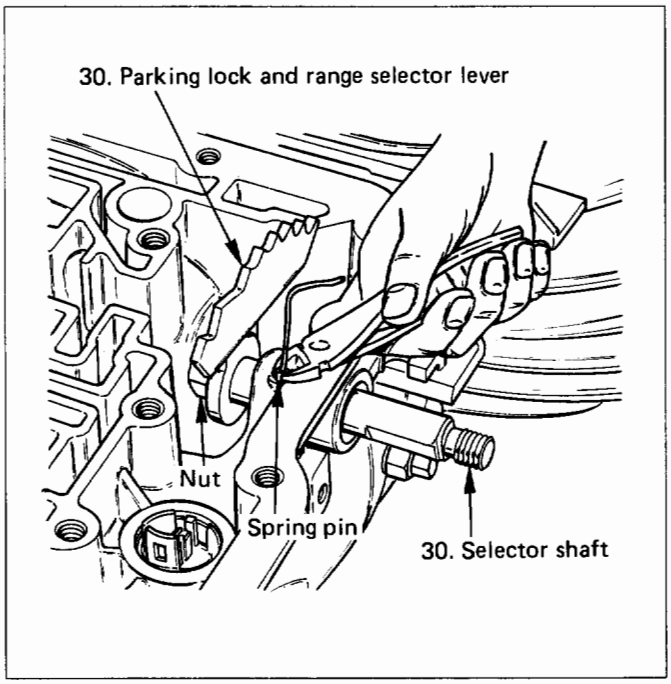

Fig. 7A-37

REASSEMBLY

30. Parking lock and selector lever assembly (Fig. 7A-38)

- Inspect selector shaft seal, replace if necessary.

NOTE:
Use a seal installer when replacing the seal.

- Install selector shaft.

NOTE:
Spring pin groove must be positioned inside the case.

- Install spring pin. Be sure the selector shaft can move freely.
  Do not push the pin flush with the case surface. Leave enough height for removal.
- Install actuator assembly.
- Install parking lock and range selector lever and new 17 mm nut.

Torque	N·m(lb·ft)	22 (16)

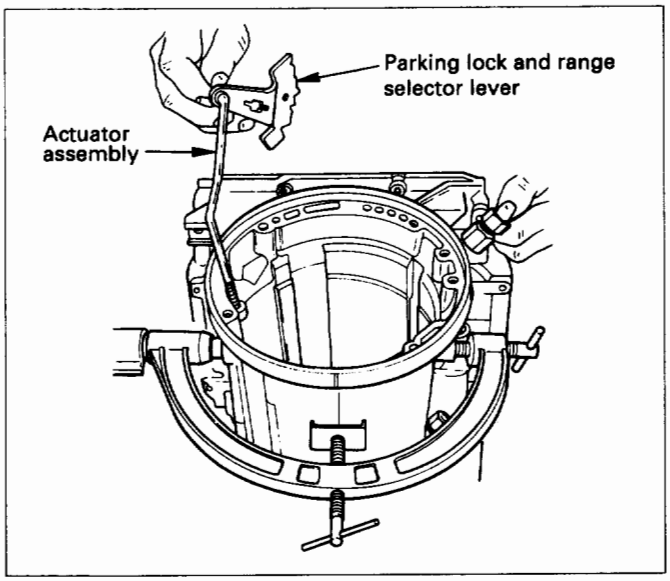

Fig. 7A-38

29. Brake band (Fig. 7A-39)

- Rotate main case to vertical position, extension end facing down.
- Install brake band assembly.

NOTE:
Be sure to align servo pin area with the servo hole.

- Install thrust bearing.

NOTE:
The case bushing acts as a guide for the thrust bearing.

28. Brake drum (Fig. 7A-39)
- Install brake drum.

27. Reaction sun gear (Fig. 7A-39)
- Install reaction sun gear.
- Install needle bearing.

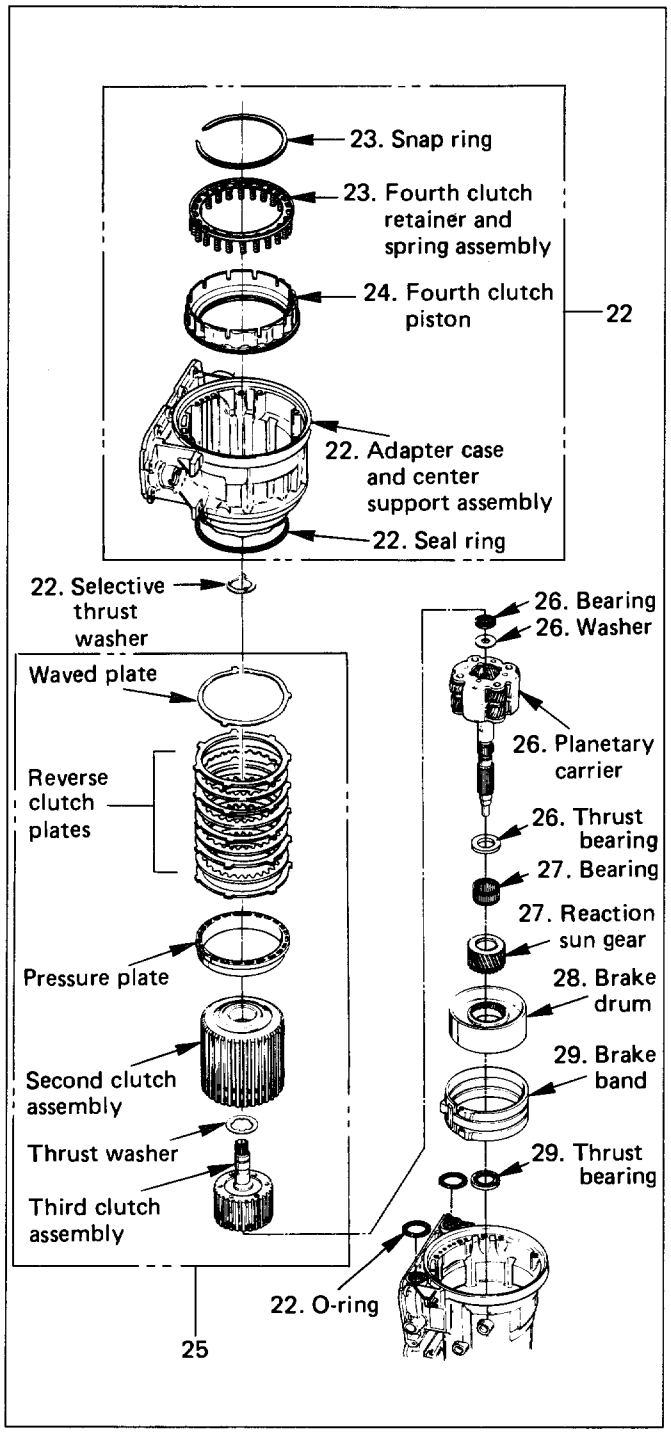

Fig. 7A-39

26. Planetary carrier assembly (Fig. 7A-39)
- Inspect planetary carrier assembly for wear and damage, if necessary renew.
- Measure pinion end play clearance (A) with a feeler gage (Fig. 7A-40).

Clearance (A) mm (in)	0.13–0.89 (0.005–0.035)

If clearance is outside specified value, replace planetary carrier assembly.

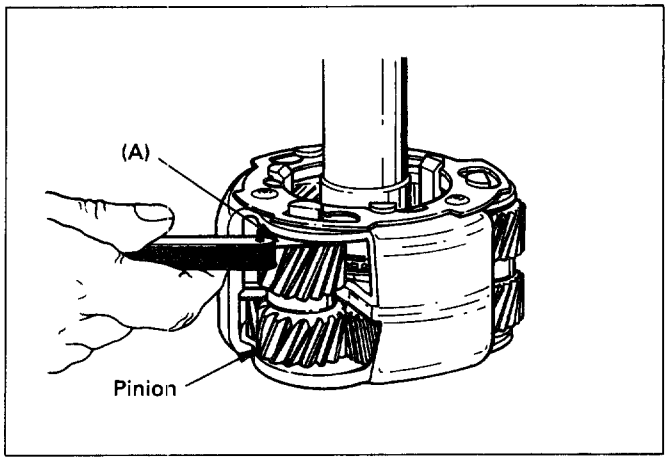

Fig. 7A-40

- Install the thrust bearing on the output shaft.

NOTE:
Use petroleum jelly to hold the thrust bearing in place.

- Align planetary pinions. Each planetary pinion is marked with double points to indicate the master tooth space and exactly opposite with a single point to indicate the master tooth. The markings on the planetary carrier consist of double lines which are to be lined-up with the double points on two opposite pinions; the single lines are to be lined-up with the single points on the other two pinions (Fig. 7A-41).
- After all four pinions are lined-up, slide on third clutch assembly. Rotate third clutch and check mark alignment. Considering that the ring gear tooth between the double points of one planetary pinion is tooth number 1, count the teeth to check that the single points on the two adjacent pinions are between teeth 23 and 24 of the ring gear, and that the ring gear tooth between the double points of the opposite pinion is tooth number 46.
  If it is not so, remove, realign and try again.
- Install planetary carrier with third clutch.

NOTE:
Do not force. When properly aligned, the parts will fit together easily.
- Remove the third clutch.
- Install bearing and washer.

NOTE:
Use petroleum jelly to hold the washer and bearing in place.

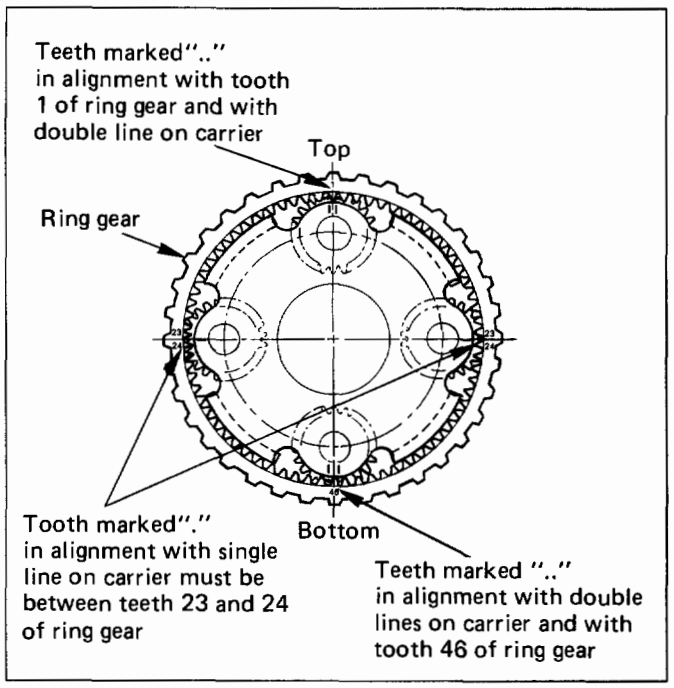

Fig. 7A-41

25. Second and third clutch assemblies (Fig. 7A-42 & Fig. 7A-43)

- Carefully align second clutch plates inner tangs.
- Install thrust washer, tangs pointing downward, locating tang positioned in slot on second clutch hub.

NOTE:
Use petroleum jelly to hold thrust washer in place.

- Install third clutch and intermediate shaft assembly into the second clutch drum.
- Install second and third clutch assemblies into the main case. Twist output shaft and clutch assemblies to insure proper fit.

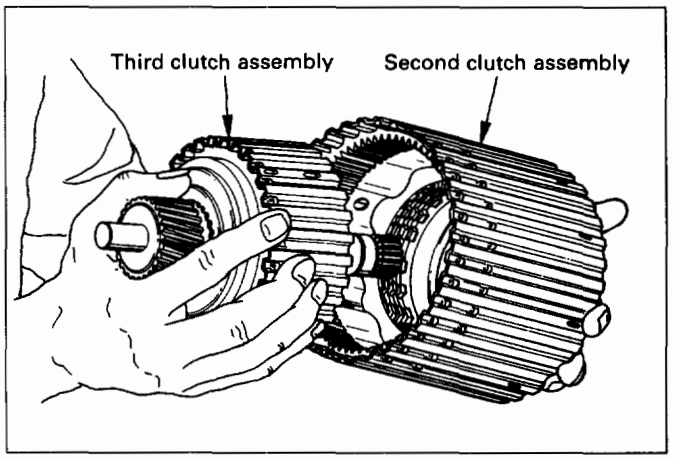

Fig. 7A-42

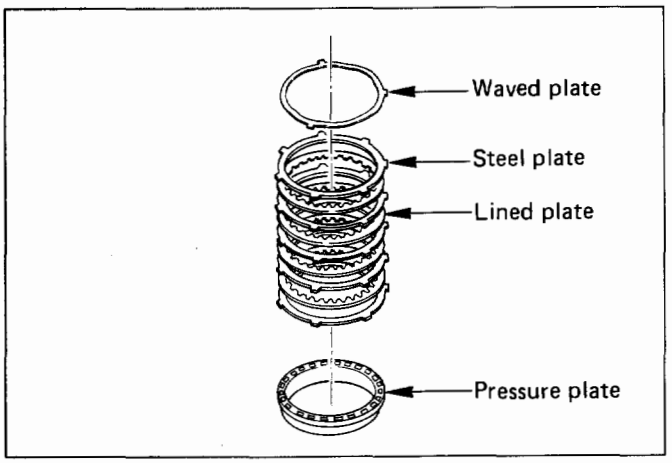

Fig. 7A-43

- Install pressure plate with lip side up, tang facing valve body face.
- Install reverse clutch plates. Start with a steel plate and alternate with lined plates.
- Install waved clutch plate, center tang facing valve body side.

Second clutch end play measurement (Fig. 7A-44 & 7A-45)

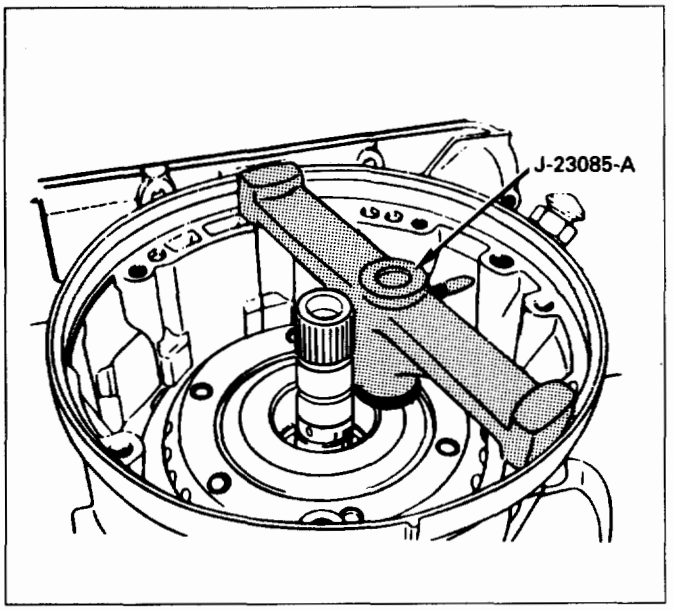

Fig. 7A-44

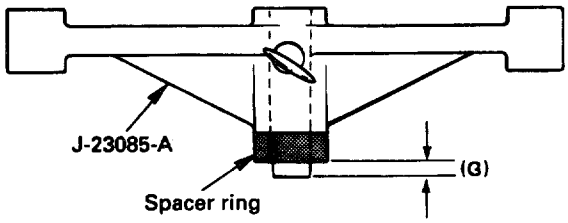

Selective Thrust Washer

DIM. "G" mm(in)	Color
1.53 - 1.63 (0.060 - 0.064)	YELLOW
1.72 - 1.82 (0.068 - 0.072)	RED
1.91 - 2.01 (0.075 - 0.079)	BLACK
2.10 - 2.20 (0.083 - 0.087)	NATURAL
2.29 - 2.39 (0.090 - 0.094)	GREEN
2.48 - 2.58 (0.098 - 0.102)	BLUE

FOLLOWING THE PROCEDURE SHOULD RESULT IN FINAL END-PLAY FROM 0.36mm TO 0.79 mm (.014" TO .031")

Fig. 7A-45

- Install the gaging tool on the case flange and against the intermediate shaft.
- Position the inner shaft of the gaging tool against the thrust surface of the second clutch hub.
- Tighten thumb screw. Remove the tool.
- Fit the spacer ring on the inner shaft of the tool.
- Measure gap ("G"). Select appropriate size washer as the chart (Fig. 7A-45) specified.

Selective washer gaging tool: J-23085-A

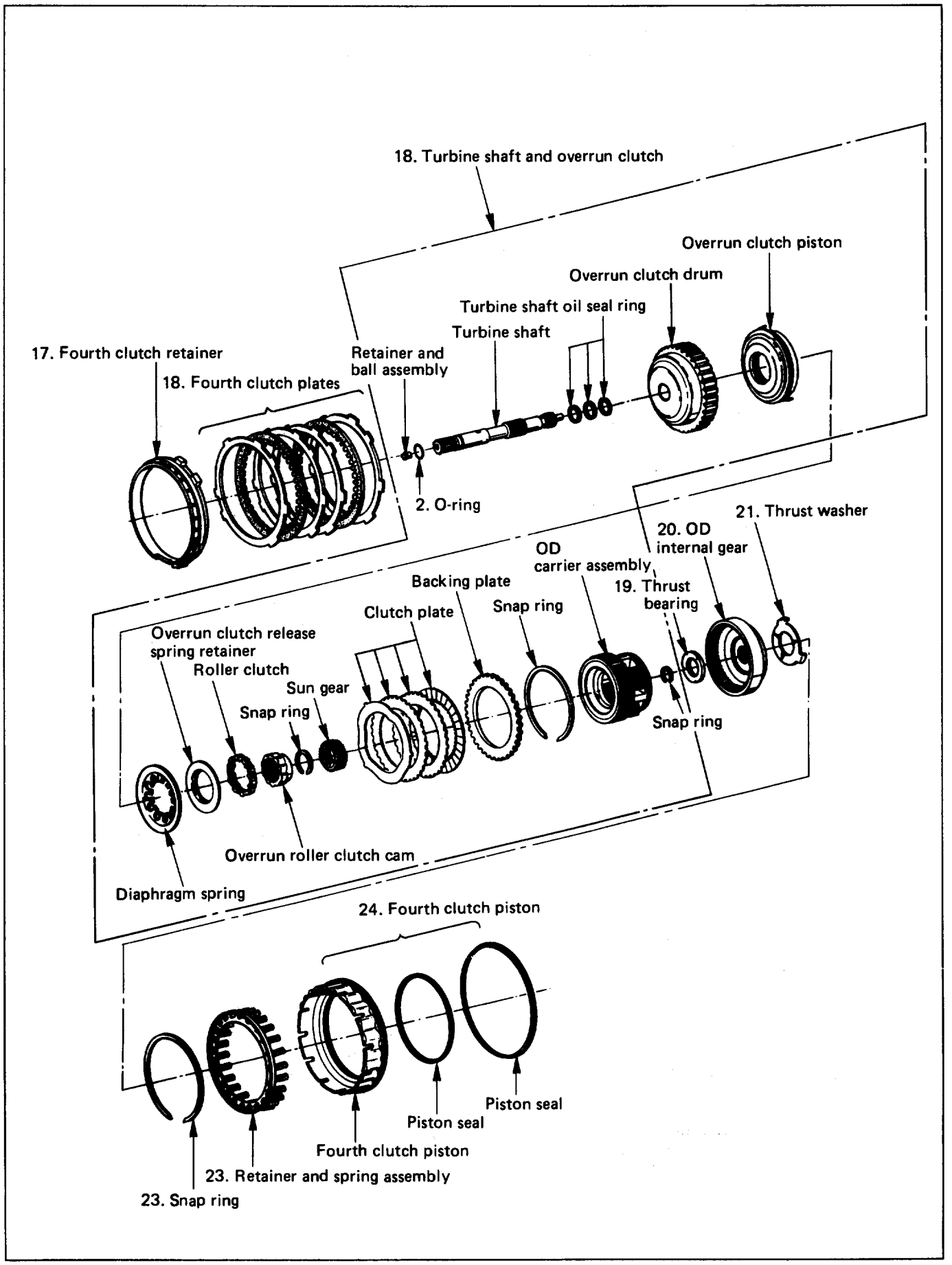
18. Turbine shaft and overrun clutch
Overrun clutch piston
Overrun clutch drum
Turbine shaft oil seal ring
Turbine shaft
17. Fourth clutch retainer
Retainer and ball assembly
18. Fourth clutch plates
2. O-ring
21. Thrust washer
20. OD internal gear
OD carrier assembly
19. Thrust bearing
Backing plate
Snap ring
Clutch plate
Overrun clutch release spring retainer
Roller clutch
Sun gear
Snap ring
Snap ring
Overrun roller clutch cam
Diaphragm spring
24. Fourth clutch piston
Piston seal
Piston seal
Fourth clutch piston
23. Retainer and spring assembly
23. Snap ring

Fig. 7A-46

24. Fourth clutch piston (Fig. 7A-47)
- Inspect piston seals and replace if necessary.
- Lubricate fitter and install on fourth clutch piston.
- Install fourth clutch piston in adapter case.
- Remove fitter.

Fourth clutch piston fitter: J-38554

23. Fourth clutch spring retainer (Fig. 7A-48)
- Install retainer and spring assembly.
- Install snap ring in adapter case.

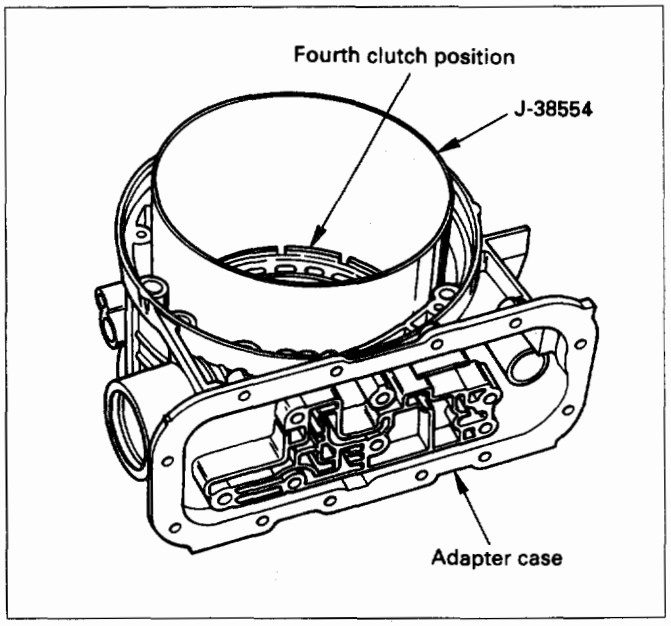

Fig. 7A-47

- Install compressor.
- Compress retainer and spring assembly.
- Seat snap ring in groove.
- Remove compressor.

Fourth clutch spring compressor: J-23327 and J-23327-90.

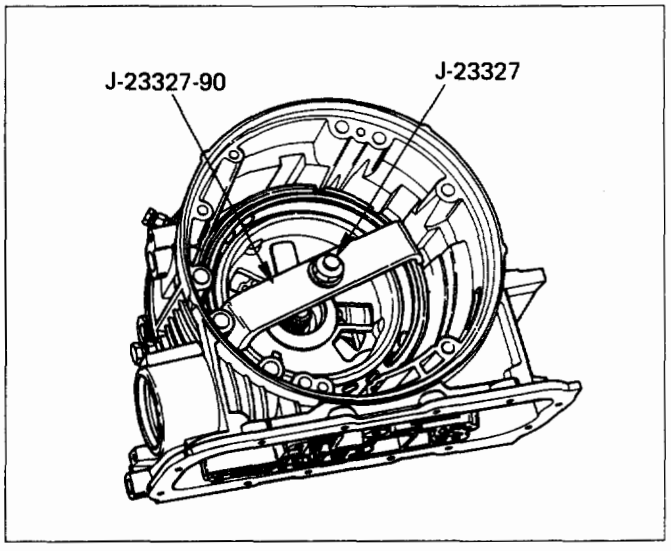

Fig. 7A-48

22. Adapter case and center support assembly (Fig. 7A-49)
- Install selective washer using petroleum jelly.
- Install two O-ring seals in main case and adapter case/main case seal ring.
- Install guide pins.
- Install adapter case complete to main case.

Guide pin: J-38588

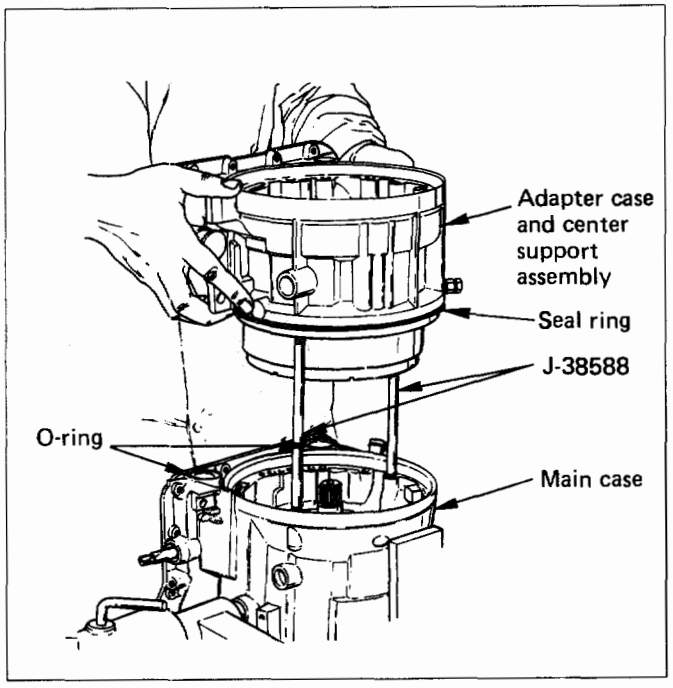

Fig. 7A-49

21. Thrust washer (Fig. 7A-50)
- Install thrust washer into adapter case, with tangs pointing downwards.

20. Overdrive internal gear (Fig. 7A-50)

19. Thrust bearing assembly (Fig. 7A-50)

18. Turbine shaft and fourth clutch plates (Fig. 7A-50)
- Preassemble overdrive internal gear and thrust bearing assembly onto the overrun clutch assembly complete.

NOTE
Install bearing assembly, black side up. Use petroleum jelly to keep assembly in place.
- Complete overdrive carrier and internal gear assembly into adapter case.
- Install fourth clutch plates in the following order. Steel, Lined, Steel, Steel, Lined, Steel. Steel plates go in with short tang facing towards valve body surface.

17. Fourth clutch retainer (Fig. 7A-50)
- Install fourth clutch retainer.
  Notch facing up and positioned towards valve body surface.

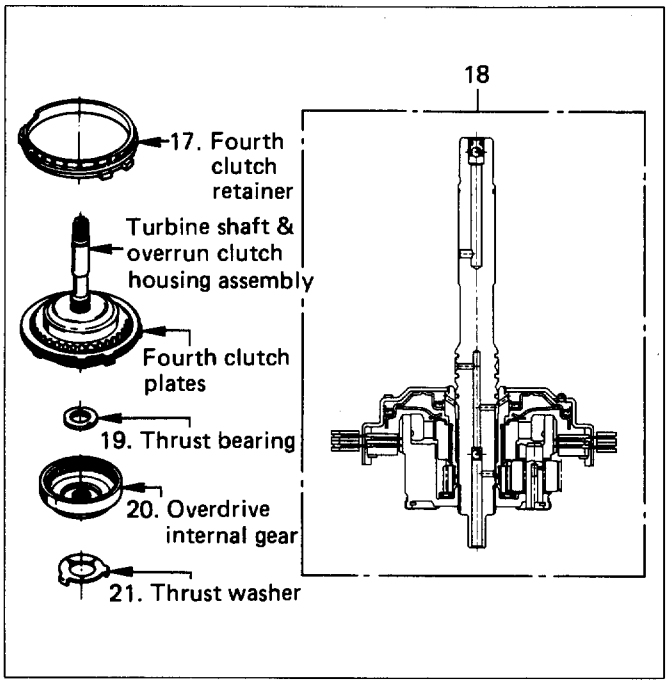

Fig. 7A-50

Overdrive clutch end play measurement (Fig. 7A-51 and Fig. 7A-52)

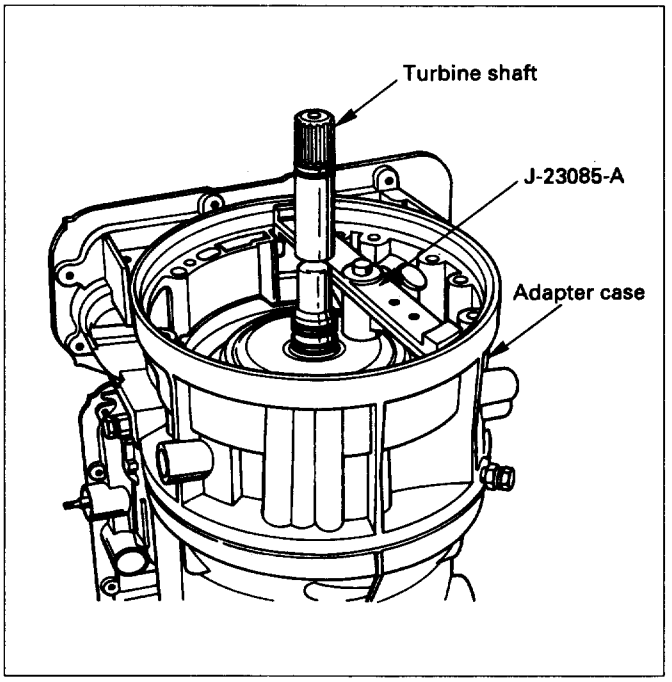

Fig. 7A-51

- Install the tool on the adapter case flange and against the input shaft.
- Position the inner shaft of the tool against the thrust surface of the overrun clutch housing.
- Tighten thumb screw. Remove the tool.
- Measure gap "G". Select appropriate size washer as the chart specifies.
- Set selective thrust washer aside.

Selective washer gaging tool: J-23085-A

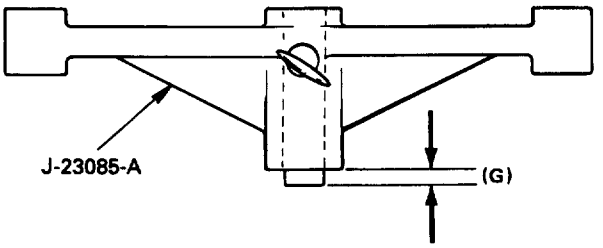

Selective Thrust Washer

Dim. "G" mm(in)	Color
1.53 - 1.63 (0.060 - 0.064)	Yellow
1.72 - 1.82 (0.068 - 0.072)	Red
1.91 - 2.01 (0.075 - 0.079)	Black
2.10 - 2.20 (0.083 - 0.087)	Natural
2.29 - 2.39 (0.090 - 0.094)	Green
2.48 - 2.58 (0.098 - 0.102)	Blue

FOLLOWING THE PROCEDURE SHOULD RESULT IN FINAL END-PLAY FROM 0.1 mm TO 0.8 mm (0.004" TO 0.03")

Fig. 7A-52

16. Converter housing and oil pump assembly (Fig. 7A-53)

- Install outer seal ring and gasket.
- Install selective washer.

NOTE:
Use petroleum jelly to hold selective washer in place.

- Install complete converter housing and oil pump assembly to adapter case.
- Fit and tighten seven outer 13 mm screws.

Torque N·m (lb·ft)	39 (29)

- Ensure free rotation of pump using rotation tool.
  Pump rotation tool: J-23082-01

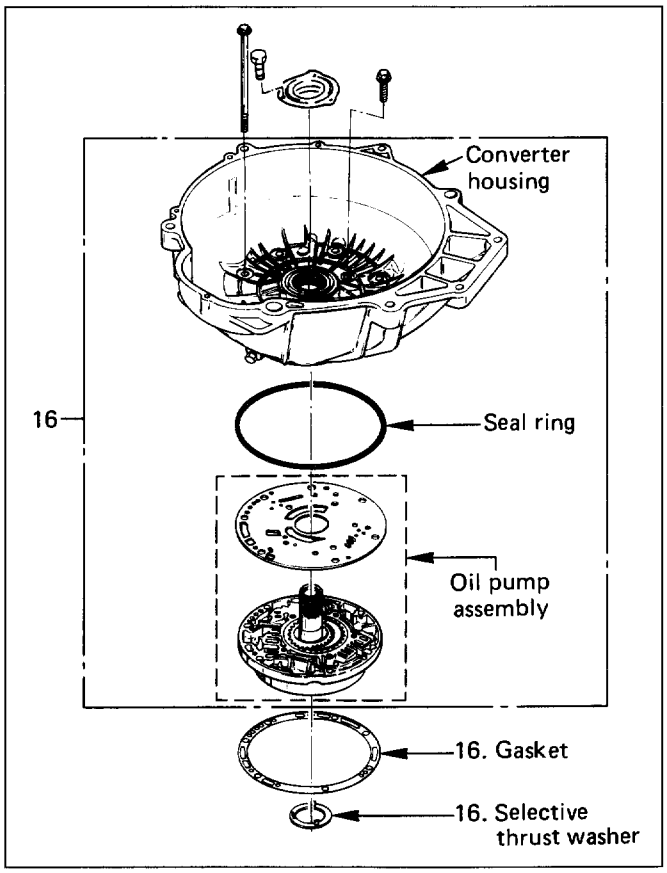

Fig. 7A-53

Overdrive end play measurement (Fig. 7A-54)

- Fit puller on turbine shaft.
- Position axial play checking tool on converter housing mating face.
- Pull turbine shaft upwards with puller until first resistance is met.
  (Due to weight of overdrive complete assembly)
  Maintain shaft in this position and set indicator to zero.
- Pull turbine shaft further upwards with puller. Read end play shown on indicator.

End play	mm (in)	0.1 – 0.8 (0.004 – 0.031)

- Remove axial play checking tool and puller.

NOTE:
If end play is not correct, repeat selective washer selection.

Turbine shaft puller: J-25022 and J-24773-1

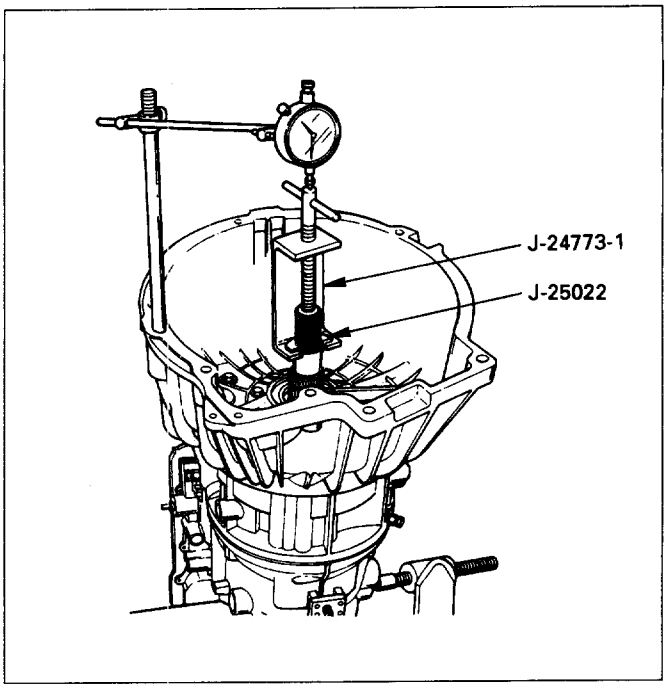

Fig. 7A-54

15. Extension housing (Fig. 7A-55)

- Inspect extension housing oil seal and replace if necessary (Fig. 7A-56).

Extension housing oil seal installer: J-36797

- Rotate transmission to horizontal position, with valve body side down.
- Inspect parking wheel seal ring. Replace if necessary.
- Install wheel parking lock assembly.
- Install speed wheel and snap ring.

NOTE:
Use extra long nose pliers.

- Install gasket onto extension assembly, using a thin coating of oil.
- Install extension housing assembly, and align parking pawl shaft.
- Install actuator assembly into extension assembly.
- Install seven 8 mm hexagon socket head screws.

Torque	N·m(lb·ft)	32 (24)

14. Speed sensor (Fig. 7A-55)

- Inspect speed sensor O-ring. Replace if necessary.
- Install speed sensor assembly and 10 mm screw.

Torque N·m(lb·in)	9 (78)

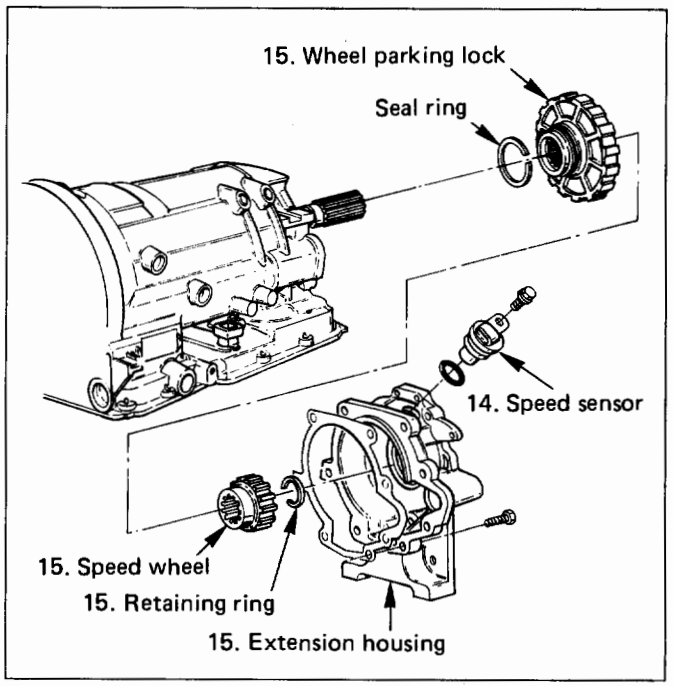

Fig. 7A-55

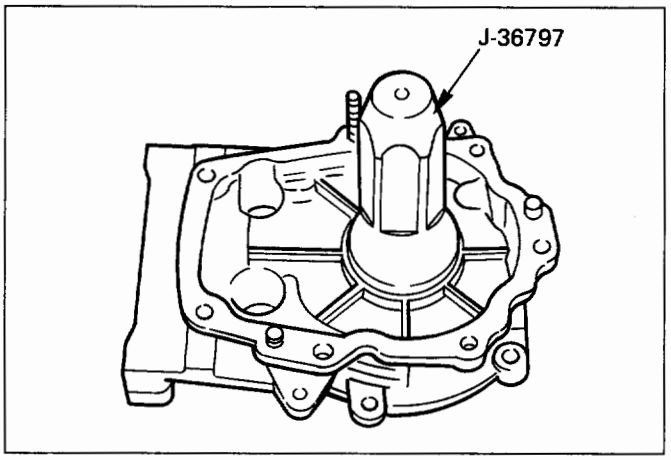

Fig. 7A-56

Main case end play measurement (Fig. 7A-57)

- Attach axial play checking tool on the extension housing and set indicator to zero on output shaft.
- Manually push output shaft upwards.

End play mm (in)	0.36 – 0.80 (0.014 – 0.031)

- Remove axial play checking tool.
- If end play is not correct, repeat selective washer selection.

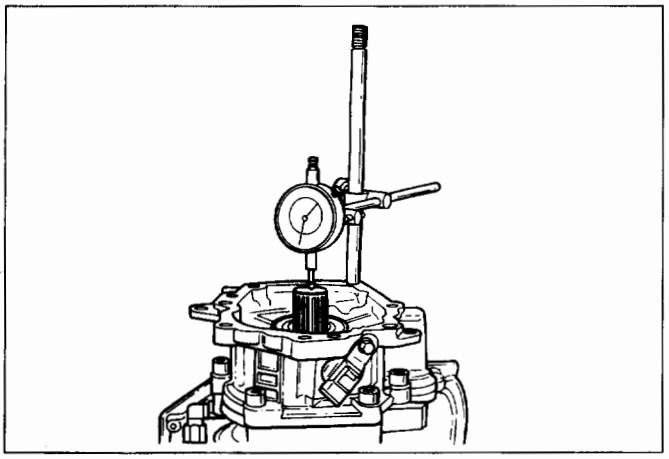

Fig. 7A-57

13. Servo piston (Fig. 7A-58)

- Inspect piston seal ring. Replace if necessary.
- Ensure brake band is correctly positioned. Rotate output shaft if necessary.
- Install servo piston fitter in servo bore.
- Install apply rod, round end toward band, return spring and piston assembly.
- Install the tool with offset to rear of case.
- Compress servo piston seal ring, using fitter while tightening the tool screw.
- Install servo piston retaining ring.
- Remove tool.
- Adjust the brake band by tightening the servo adjusting screw to 4.5 N·m torque. Be certain the lock nut is loose, then back-off the screw five turns exactly. Hold piston sleeve with wrench and tighten lock nut to 18.5 N·m torque. Be certain the adjusting screw does not turn.

Servo spring compressor: J-23075
Servo piston fitter: J-38428

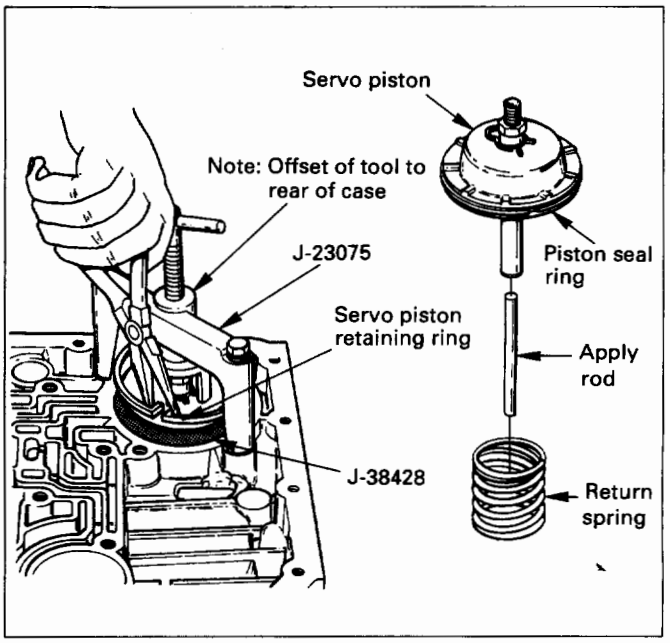

Fig. 7A-58

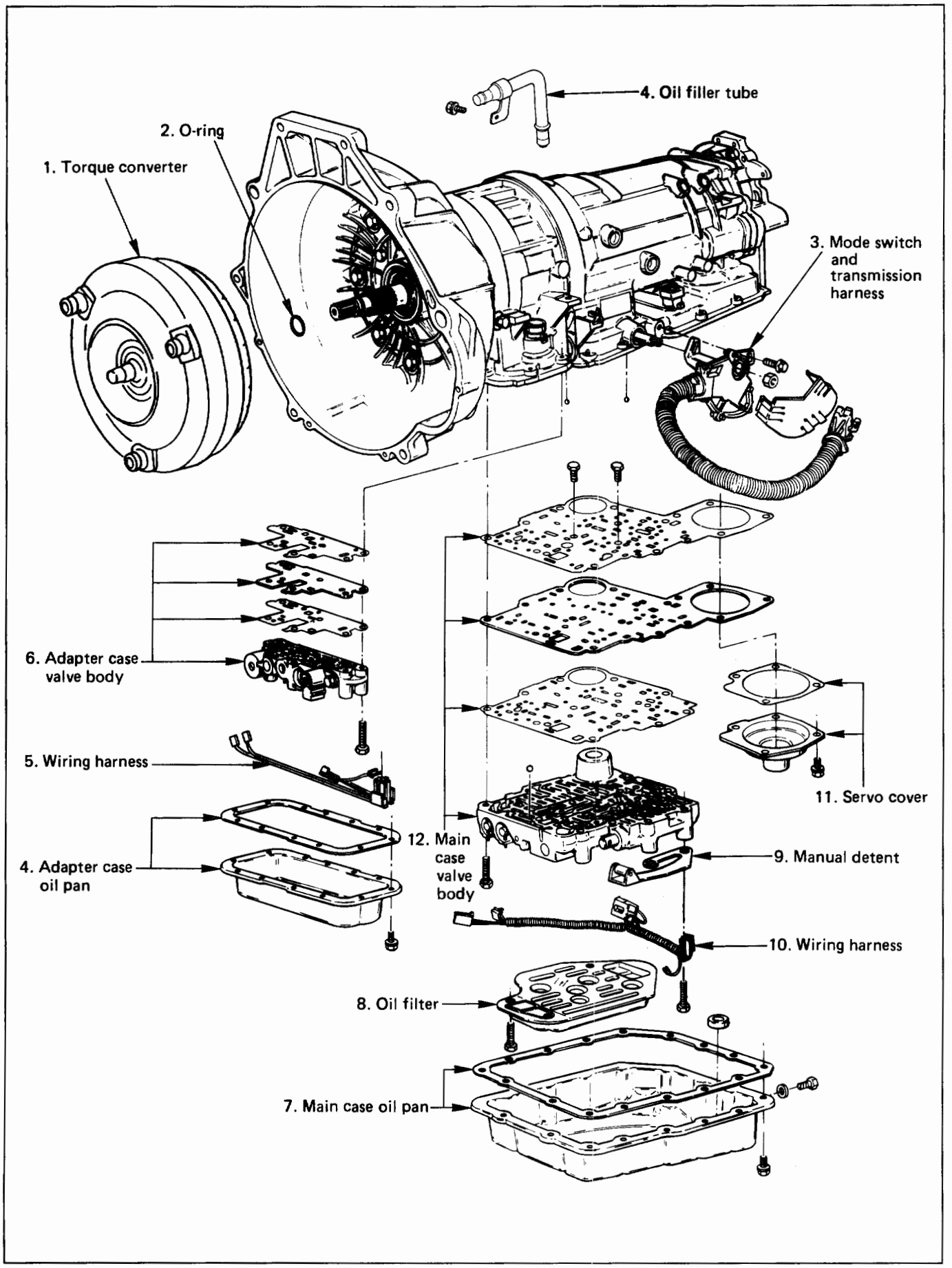
4. Oil filler tube
2. O-ring
1. Torque converter
3. Mode switch and transmission harness
6. Adapter case valve body
5. Wiring harness
4. Adapter case oil pan
12. Main case valve body
11. Servo cover
9. Manual detent
10. Wiring harness
8. Oil filter
7. Main case oil pan

Fig. 7A-59

12. Main case valve body (Fig. 7A-59)
- Install two check balls (Fig. 7A-60).
- Inspect electrical connector and seal, replace if necessary.
- Install electrical 4 pin connector/main case and wiring harness.
- Install two guide pins into main case.
  Guide pin: J-25025-B
- Install valve body complete assembly and manual valve link.

NOTE:
Valve must be extended as the short end of manual valve link is connected to the range selector lever. Long end of link goes into valve.

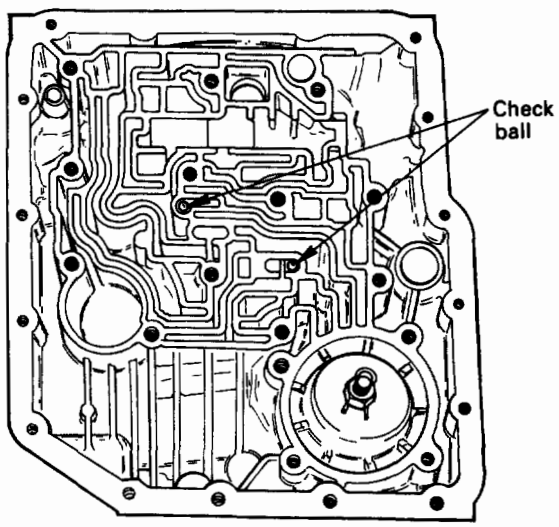

Fig. 7A-60

- Install seven 13 mm screws.

Torque	N·m(lb·ft)	20 (15)

- Remove two guide pins.

11. Servo cover (Fig. 7A-59)
- Install servo cover gasket, cover and four 13 mm screws.

Torque	N·m(lb·ft)	25 (18)

10. Wiring harness (Fig. 7A-59)
- Connect harness to band control and shift solenoids.

9. Manual detent (Fig. 7A-59)
- Install roller and spring assembly with clip. Install two 13 mm screws.

Torque	N·m(lb·ft)	20 (15)

8. Oil filter (Fig. 7A-59)
- Install oil filter, three 13 mm screws.

Torque	N·m(lb·ft)	20 (15)

7. Main case oil pan (Fig. 7A- 59)
- Install oil pan gasket, magnet, oil pan, sixteen 10 mm screws.

Torque	N·m(lb·in)	11 (96)

6. Adapter case valve body (Fig. 7A-59)
- Inspect electrical connector and seal. Replace if necessary.
  Install electrical five pin connector and harness assembly in bottom of adapter case.
  Install gasket, transfer plate, gasket.
- Install adapter case valve body complete and seven 13 mm screws.

Torque	N·m(lb·ft)	20 (15)

5. Wiring harness (Fig. 7A-59)
- Connect harness assembly to converter clutch solenoid, and force motor.

4. Adapter case oil pan (Fig. 7A-59)
- Install oil pan gasket, oil pan, twelve 10 mm screws.

Torque	N·m(lb·in)	11 (96)

- Rotate transmission, with bottom pan facing down.
- Install seal ring, oil filler tube, 10 mm screw.

Torque	N·m(lb·in)	13 (113)

3. Mode switch and transmission harness (Fig. 7A-61).
- Install transmission harness.
- Install mode switch, shield and two 10 mm screws.
- Adjust using setting tool.
  Refer to "MODE SWITCH" in this section.

Torque	N·m(lb·ft)
Selector shaft nut	23 (17)
10 mm screw	13 (113 lb·in)

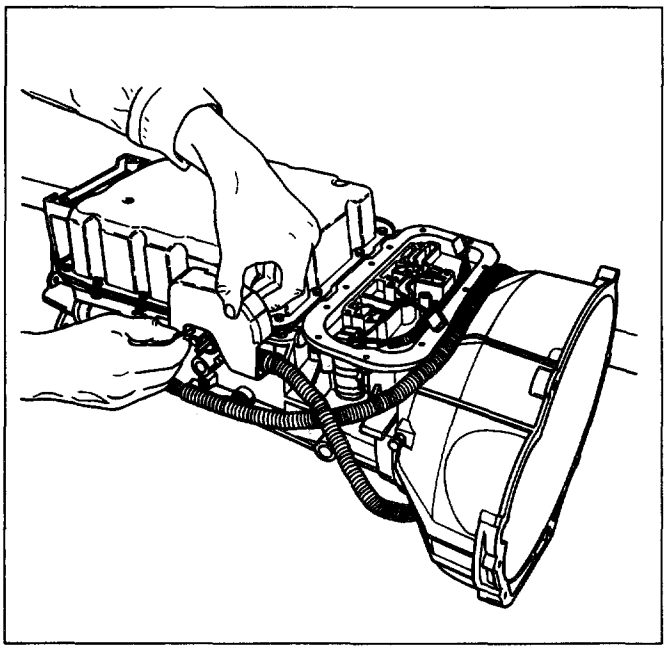

Fig. 7A-61

2. **O-ring (Fig. 7A-59)**
   - Install O-ring on turbine shaft.

1. **Torque converter (Fig. 7A-59)**

The converter assembly must be replaced under any of the following conditions:

a. Evidence of damage to the pump assembly
b. Metal particles are found after flushing the cooler lines
c. External leaks in hub weld area
d. Converter Pilot broken, damaged or poor fit into crankshaft
e. Converter hub scored or damaged
f. Internal failure in stator
g. Contamination from engine coolant
h. Excess end play.

- Install converter assembly.
  Rotate transmission, bell housing up. Spin converter to insure proper fit.
- Fill transmission through the oil filler tube, using DEXRON®-III Automatic transmission fluid.

CONVERTER HOUSING AND OIL PUMP ASSEMBLY

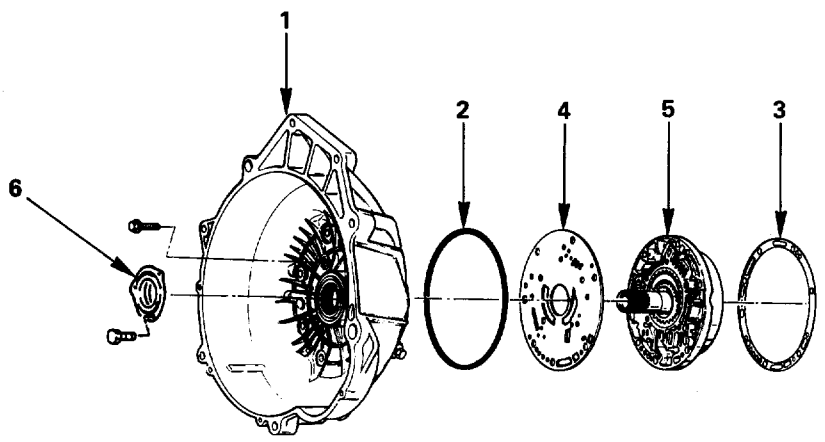

Disassembly steps
1. Converter housing
2. Outer seal ring
3. Gasket
4. Wear plate
5. Oil pump assembly
6. Oil seal ring

Reassembly steps
To reassemble, follow the disassembly steps in the reverse order.

Fig. 7A-62

DISASSEMBLY

1. **Converter housing**
   - Remove five bolts from converter housing.
2. **Outer seal ring**
3. **Gasket**
4. **Wear plate**
5. **Oil pump assembly**
6. **Oil seal ring**

INSPECTION AND REPAIR

Visual check
- If any damage, deformation or local wear is found in a converter housing, outer seal ring, wear plate or oil seal ring, replace it.

REASSEMBLY

6. **Oil seal ring**
   - Install oil seal ring using installer.

Torque N·m (lb·in)	3 (26)

5. **Oil pump assembly**
4. **Wear plate**
   - Install wear plate onto oil pump assembly.
3. **Gasket**
2. **Outer seal ring**
1. **Converter housing (Fig. 7A-63)**
   - Install converter housing onto complete oil pump assembly. Align with two short guide pins on outer bolt holes.
   - Loosely install five 13mm bolts.
   - Center converter housing using centering tool.
   - Tighten five inner 13mm bolts in an alternating pattern.

Torque N·m (lb·ft)	20 (15)

Guide pin: J-38588
Centering tool: J-38557

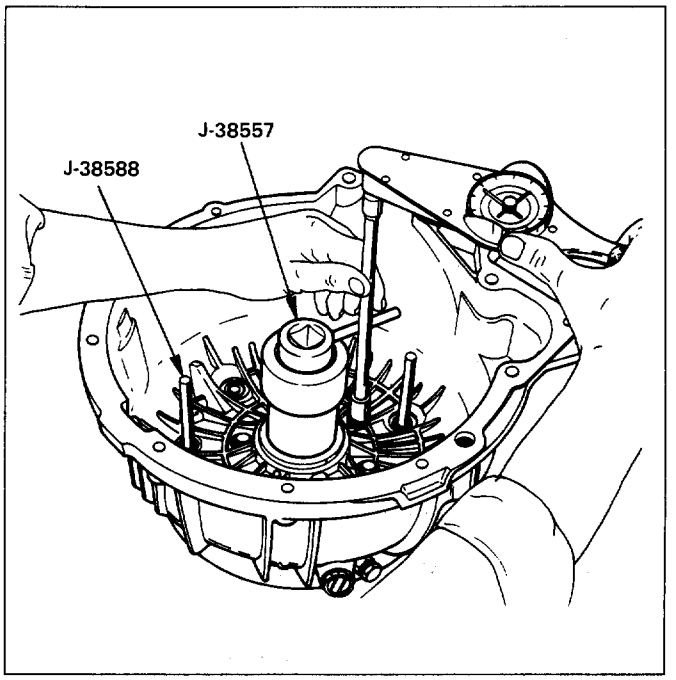

Fig. 7A-63

OIL PUMP

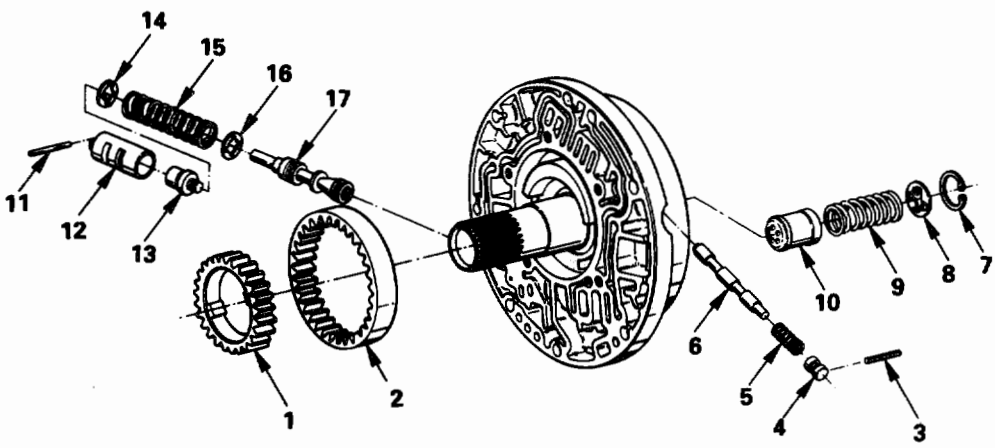

Disassembly steps

1. Oil pump drive gear
2. Oil pump driven gear
3. Pin
4. Plug
5. Spring
6. Converter clutch control valve
7. Snap ring
8. Spring seat
9. Spring
10. Throttle signal accumulator piston
11. Sleeve pin
12. Sleeve
13. Boost valve
14. Spring seat
15. Valve spring
16. Spring seat
17. Pressure regulator valve

Reassembly steps

To reassemble, follow the disassembly steps in the reverse order.

Fig. 7A-64

DISASSEMBLY

1. **Oil pump drive gear**
2. **Oil pump driven gear**
3. **Pin**
4. **Plug**
5. **Spring**
6. **Converter clutch control valve**
7. **Snap ring**
8. **Spring seat**
9. **Spring**
10. **Throttle signal accumulator piston**
11. **Sleeve pin**
12. **Sleeve**
13. **Boost valve**
14. **Spring seat**
15. **Valve spring**
16. **Spring seat**
17. **Pressure regulator valve**

INSPECTION AND REPAIR

Visual check

- If any damage, deformation or local wear is found in a snap ring, spring, spring retainer valve, gear or oil pump, replace it.

REASSEMBLY

17. **Pressure regulator valve**
16. **Spring seat**
    - Lubricate and preinstall pressure regulator spring seat on valve, with the flat side against shoulder.
15. **Valve spring**
14. **Spring seat**
13. **Boost valve**
12. **Sleeve**
11. **Sleeve pin**
10. **Throttle signal accumulator piston**
9. **Spring**
8. **Spring seat**
    - Install throttle signal accumulator piston, spring, and spring seat, with the flat side away from the spring and snap ring.
7. **Snap ring**
6. **Converter clutch control valve**
5. **Spring**
4. **Plug**
3. **Pin**
2. **Oil pump driven gear**
1. **Oil pump drive gear**

MAIN CASE VALVE BODY

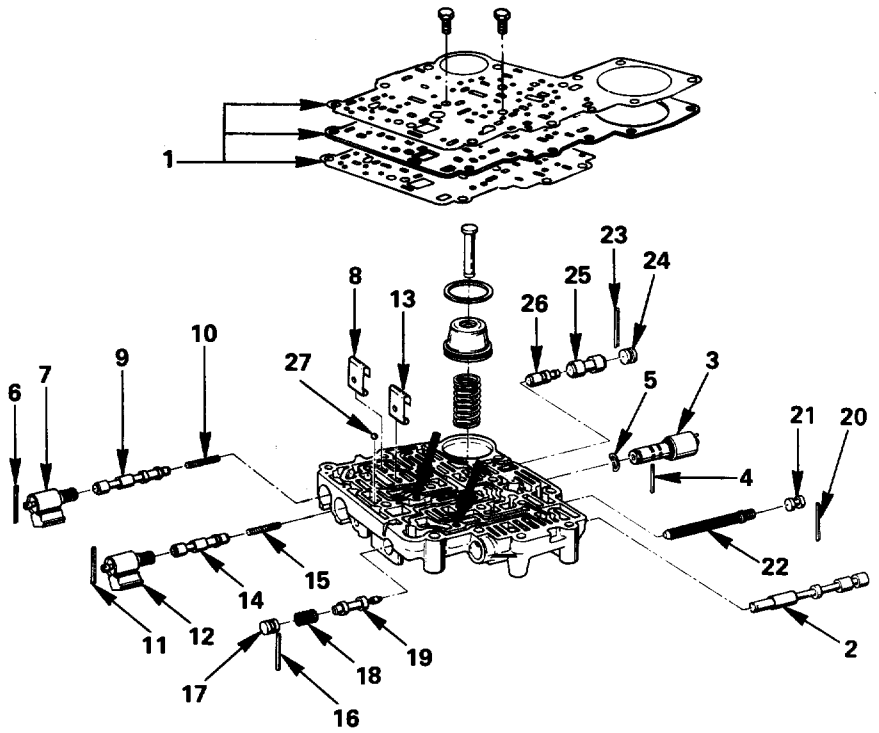

Disassembly steps

1. Gaskets and transfer plate
2. Manual valve
3. Band control solenoid
4. Pin
5. Waved washer
6. Spring pin
7. 1-2/3-4 solenoid
8. Retainer
9. 1-2/3-4 shift valve
10. Spring
11. Spring pin
12. 2-3 solenoid
13. Retainer
14. 2-3 shift valve
15. Spring
16. Spring pin
17. Plug
18. Spring
19. Low pressure control valve
20. Spring pin
21. Plug
22. Band control screen assembly
23. Spring pin
24. Plug
25. 1-2 accumulator valve
26. 1-2 accumulator control valve
27. Check ball

Reassembly steps

To reassemble, follow the disassembly steps in the reverse order.

Fig. 7A-65

DISASSEMBLY

1. **Gaskets and transfer plate**
   - Remove two 11mm bolts from valve body.
2. **Manual valve**
3. **Band control solenoid**
4. **Pin**
5. **Waved washer**
6. **Spring pin**
7. **1-2/3-4 solenoid**
   - Remove solenoids by grasping the metal tip. Do not grasp the connector housing.
8. **Retainer**
9. **1-2/3-4 shift valve**
10. **Spring**
11. **Spring pin**
12. **2-3 solenoid**
    - Remove solenoids by grasping the metal tip. Do not grasp the connector housing.
13. **Retainer**
14. **2-3 shift valve**
15. **Spring**
16. **Spring pin**
17. **Plug**
18. **Spring**
19. **Low pressure control valve**
20. **Spring pin**
21. **Plug**
22. **Band control screen assembly**
23. **Spring pin**
24. **Plug**
25. **1-2 accumulator valve**
26. **1-2 accumulator control valve**
27. **Check ball**
    - Remove 1 check ball from valve body.

INSPECTION AND REPAIR

Inspect for the following and replace any damaged or worn parts:

- Damage or wear to each valve.
- Damage in oil passeges.
- Cracks or damage to valve body.
- Valve operations.
- Spring fatigue.

REASSEMBLY

27. **Check ball**
    - Install 1 check ball to valve body
26. **1-2 accumulator control valve**
25. **1-2 accumulator valve**
24. **Plug**
23. **Spring pin**
22. **Band control screen assembly**
21. **Plug**
20. **Spring pin**
19. **Low pressure control valve**
18. **Spring**
17. **Plug**
16. **Spring pin**
15. **Spring**
14. **2-3 shift valve**
13. **Retainer**
12. **2-3 solenoid**
11. **Spring pin**
10. **Spring**
9. **1-2/3-4 shift valve**
8. **Retainer**
7. **1-2/3-4 solenoid**
6. **Spring pin**
5. **Waved washer**
4. **Pin**
3. **Band control solenoid**
2. **Manual valve**
1. **Gaskets and transfer plate**
    - Install gasket (valve body/transfer plate) and transfer plate, using two guide pins (Fig. 7A-66).
    - Install two 11mm bolts.

Torque N·m (lb·in)	13 (113)

- Install gasket (transfer plate/main case).
  Guide pins : J-3387-2

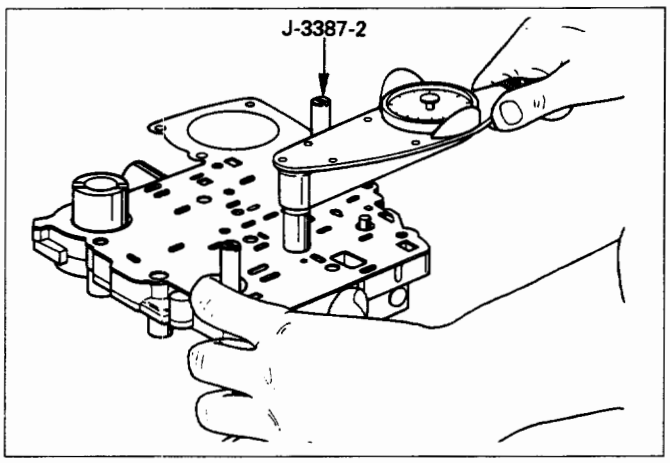

Fig. 7A-66

ADAPTER CASE VALVE BODY

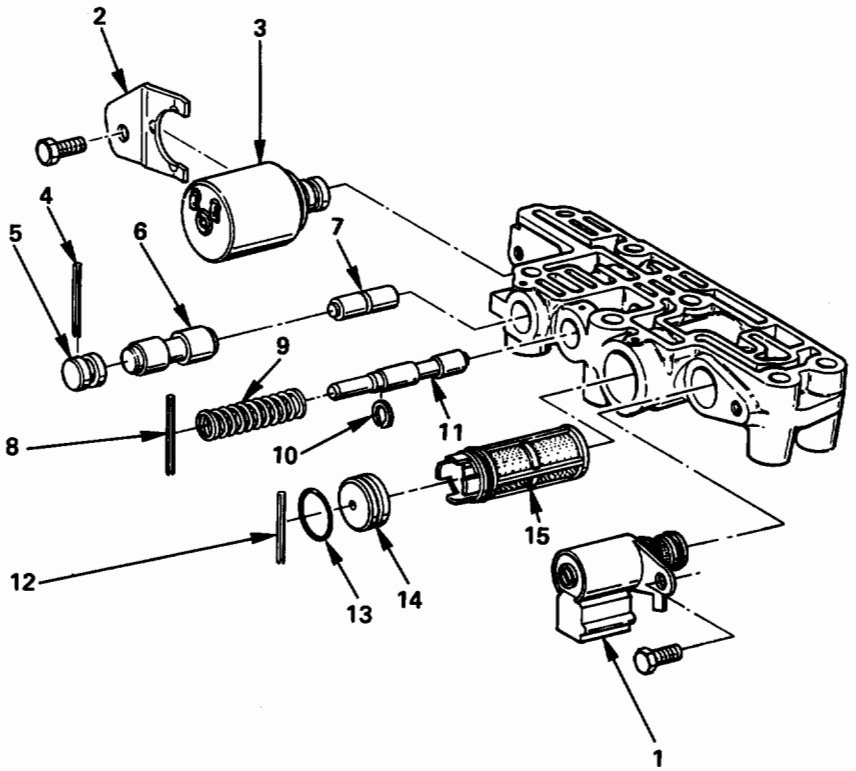

Disassembly steps

1. Converter clutch solenoid
2. Retainer
3. Force motor solenoid
4. Spring pin
5. Plug
6. 3/4 accumulator valve
7. 3/4 accumulator control valve
8. Spring pin
9. Spring
10. Retaining ring
11. Feed limit valve
12. Spring pin
13. O-ring
14. Plug
15. Force motor screen assembly

Reassembly steps

To reassemble, follow the disassembly steps in the reverse order.

Fig. 7A-67

DISASSEMBLY

1. **Converter clutch solenoid**
   - Remove 11mm bolt from valve body.
   - Remove converter control solenoid assembly with two O-ring.
2. **Retainer**
   - Remove 11mm bolt and retainer from valve body.
3. **Force motor solenoid**
4. **Spring pin**
5. **Plug**
6. **3/4 accumulator valve**
7. **3/4 accumulator control valve**
8. **Spring pin**
9. **Spring**
10. **Retaining ring**
11. **Feed limit valve**
12. **Spring pin**
13. **O-ring**
14. **Plug**
15. **Force motor screen assembly**
    - Use 5mm bolt to pull plug.

INSPECTION AND REPAIR

Inspect for the following and replace any damaged or worn parts:

- Damage or wear to each valve.
- Damage in oil passeges.
- Cracks or damage to valve body.
- Valve operations.
- Spring fatigue

REASSEMBLY

15. **Force motor screen assembly**
14. **Plug**
13. **O-ring**
12. **Spring pin**
11. **Feed limit valve**
10. **Retaining ring**
9. **Spring**
8. **Spring pin**
7. **3/4 accumulator control valve**
6. **3/4 accumulator valve**
5. **Plug**
4. **Spring pin**
3. **Force motor solenoid**
2. **Retainer**
   - Place solenoid terminals pointing towards mating face.
   - Install retainer and bolt.

Torque N·m (lb·in)	10 (87)

1. **Converter clutch solenoid**
   - Install converter clutch solenoid assembly with two O-rings to valve body.
   - Install bolt.

Torque N·m (lb·in)	10 (87)

THIRD CLUTCH AND SPRAG UNIT

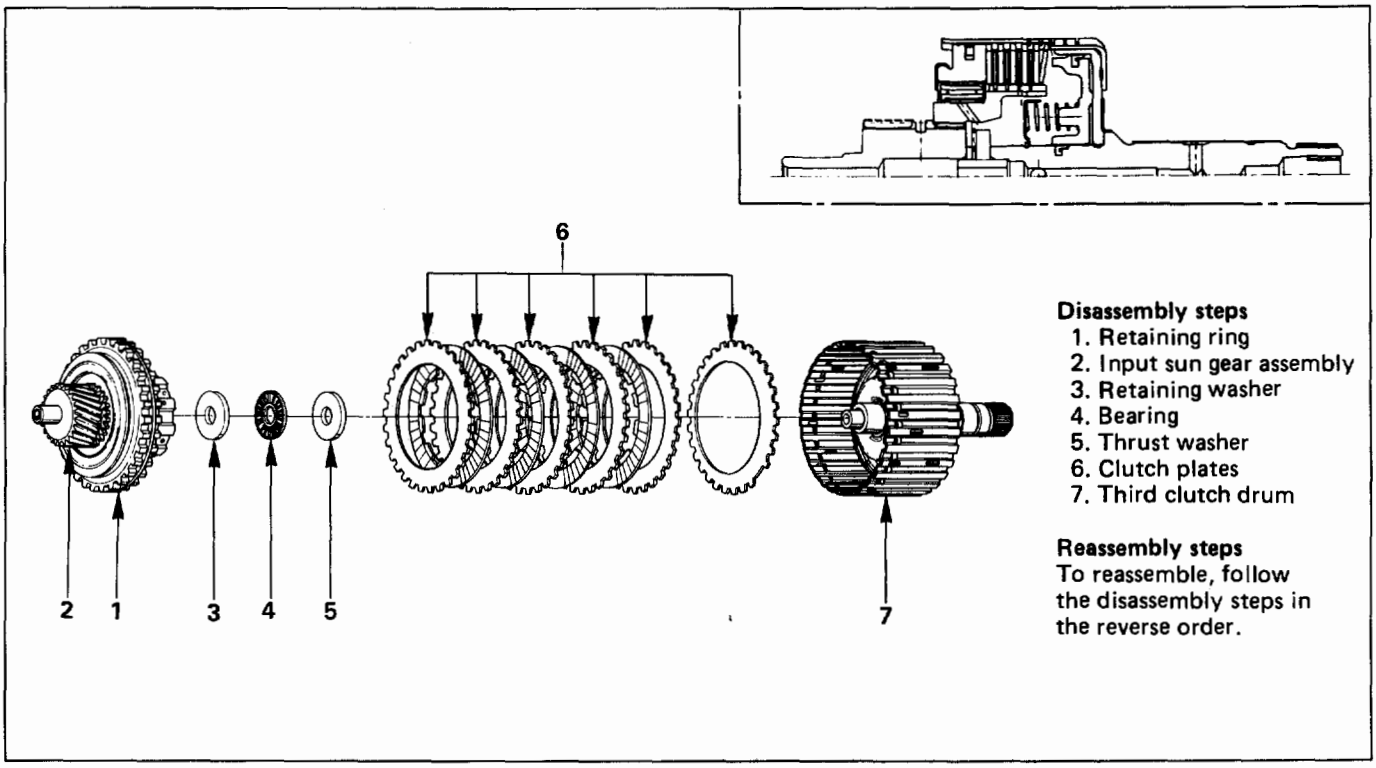

Fig. 7A-68

DISASSEMBLY

1. **Retaining ring (Fig. 7A-69)**
   - Place the third clutch housing and intermediate shaft assembly upright, using the overdrive internal gear as a support.
   - Locate the end of the sprag retaining ring. Compress near the end, using a screwdriver through the side slot and slide one tool blade between ring and housing to hold the ring clear of the groove.
   - Repeat with a second tool blade near the other end of the retaining ring.
   - Repeat with a third tool blade opposite the first two.
   - Repeat with two further blades equally spaced apart.

Third clutch retaining ring compressor: J-38450

2. **Input sun gear assembly**
   - Pull the input sun gear assembly unit until the sprag retaining ring clears the ring groove.
3. **Retaining washer**
4. **Bearing**
5. **Thrust washer**
6. **Clutch plates**
7. **Third clutch drum**

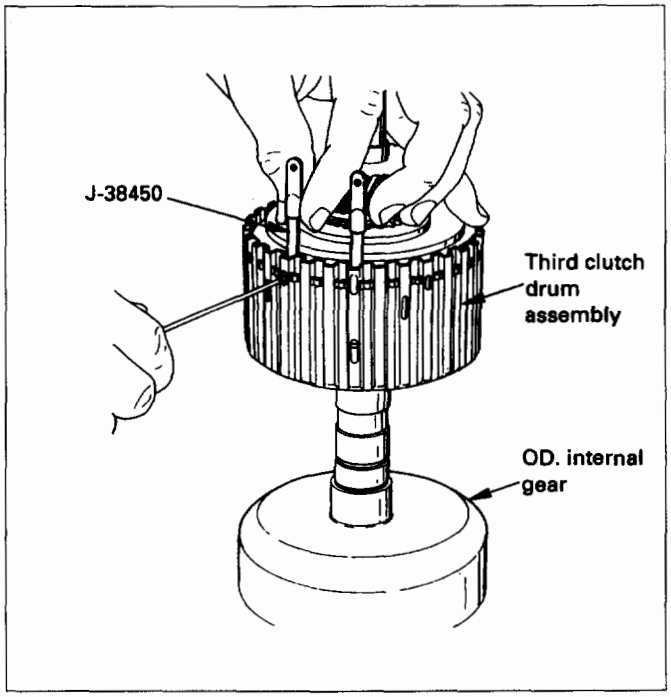

Fig. 7A-69

INSPECTION AND REPAIR

Visual check

- If any damage, deformation or local wear is found in a bearing, thrust washer, clutch plates or third clutch drum, replace it.

REASSEMBLY

7. **Third clutch drum**
6. **Clutch plates**
   - Place third clutch housing and intermediate shaft assembly upright, using the overdrive internal gear as a support.
   - Install third clutch spring cushion plate, bevel face down.
   - Install third clutch plates into clutch housing. Start with the steel clutch plate and alternate with lined plates.
5. **Thrust washer**
4. **Bearing**
3. **Retaining washer**
2. **Input sun gear assembly (Fig. 7A-70)**
1. **Retaining ring**
   - Fully engage the sprag assembly hub splines into the third clutch inner tangs. Simultaneously rotate the outer sprag race to engage into the third clutch housing.
   - Install a tool blade at each extremity of the retaining ring.
   - Compress the retaining ring with a screwdriver opposite the tool blades while pushing down on the outer sprag race.
   - Engage retaining ring into groove.
   - Remove tool blades.

Third clutch retaining ring compressor: J-38450

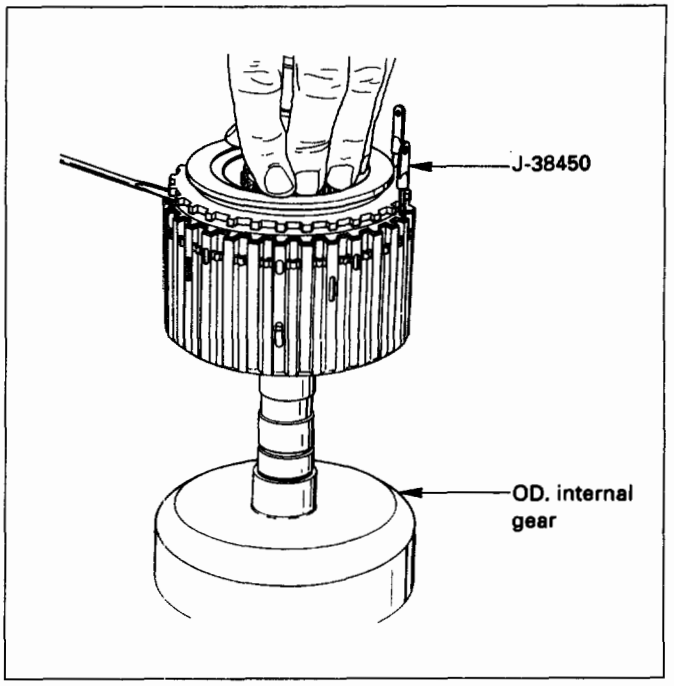

Fig. 7A-70

THIRD CLUTCH

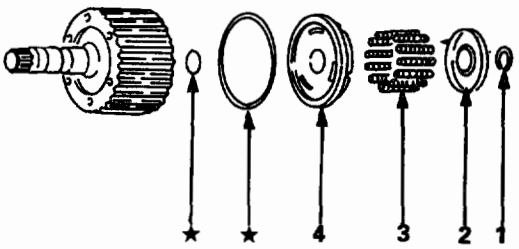

Disassembly steps
1. Retaining ring
2. Spring seat
3. Springs
4. Piston

Reassembly steps
To reassemble, follow the disassembly steps in the reverse order.
★; **Repair kit**

Fig. 7A-71

DISASSEMBLY

1. Retaining ring (Fig. 7A-72)

- Compress spring seat using the tool.

NOTE:
Do not over-stress the springs and seat. This will cause damage to the spring seat.

- Remove retaining ring.
- Release the spring seat.

NOTE:
Do not let the spring seat catch in the ring groove.
Spring compressor: J-23075
Adapter: J-23075-12

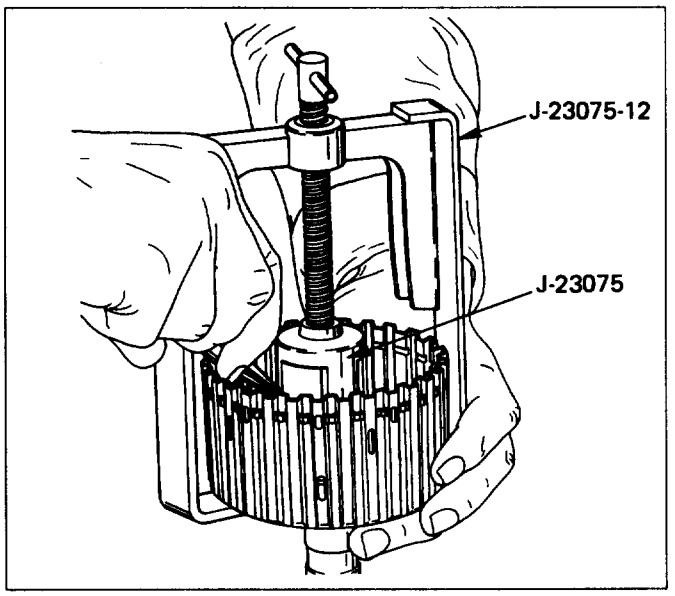

Fig. 7A-72

2. Spring seat
3. Springs
4. Piston

INSPECTION AND REPAIR

Visual check

- If any damage, deformation or local wear is found in a retaining ring, return spring, piston seals or spring seat, replace it.

Operation check

- Shake piston and listen for check ball movement. Replace piston if check ball is missing or falls out.

REASSEMBLY

4. Piston (Fig. 7A-73)

- The lip of the seals must point toward the front of the transmission. Lubricate the lip seal with transmission fluid.
- Install piston assembly into the third clutch drum. Use installer to protect the outer seal during installation.
  Third clutch piston installer: J-23084

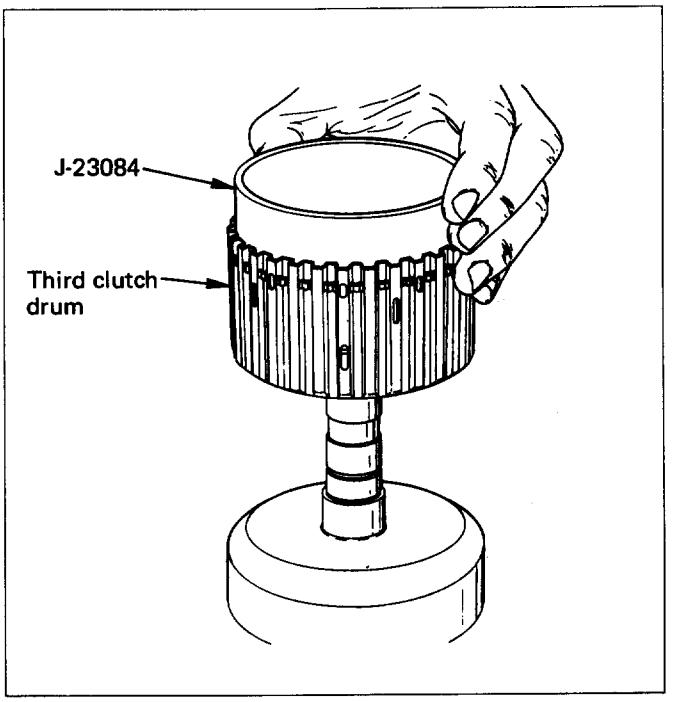

Fig. 7A-73

3. Springs
2. Spring seat
1. Retaining ring

- Place retaining ring onto spring seat.
- Compress the piston springs, using the piston spring compressor.

CAUTION:
Do not over-stress the springs and seat. Do not let the spring seat catch in the ring groove. This may cause damage to the spring seat.

- Install spring seat retaining ring.
- Remove the piston spring compressor.
  Spring compressor: J-23075
  Adapter: J-23075-12

SPRAG UNIT

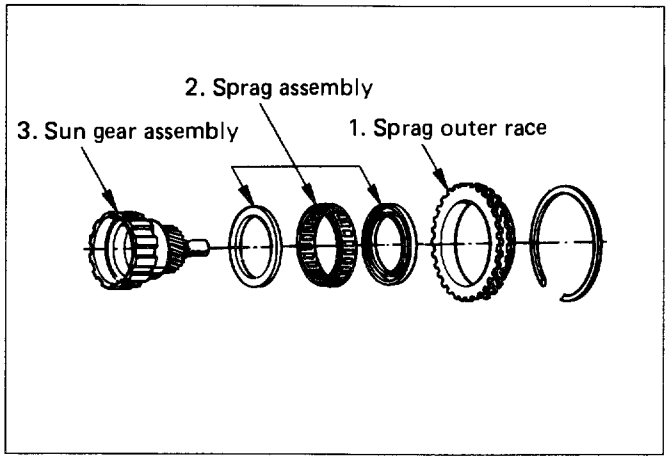

Fig. 7A-74

DISASSEMBLY

1. **Sprag outer race**
2. **Sprag assembly**
   - Remove sprag outer race and sprag assembly from third clutch hub and sun gear assembly.
3. **Sun gear assembly**

INSPECTION AND REPAIR

Visual check

- If any damage, deformation or local wear is found in a sun gear, sprag assembly or sprag outer race, replace it.

REASSEMBLY

3. **Sun gear assembly**
2. **Sprag assembly**
   - Install sprag assembly onto the sun gear.

NOTE:
Flared shoulder of the sprag cage faces the sun gear.
This procedure must be followed exactly to be sure that the sprag assembly is installed properly.

1. **Sprag outer race (Fig. 7A-75)**
   - Install outer sprag race assembly over the sprag cage assembly.
   - Place third clutch hub and sun gear assembly on a flat surface, sun gear facing up. Place sprag outer race and sprag assembly over the sun gear assembly, push down and turn the input sun counterclockwise at the same time.

NOTE:
Check correct rotation by holding the sun gear in your left hand and turning the outer race. The outer sprag race should turn freely towards you and lock turning away from you.

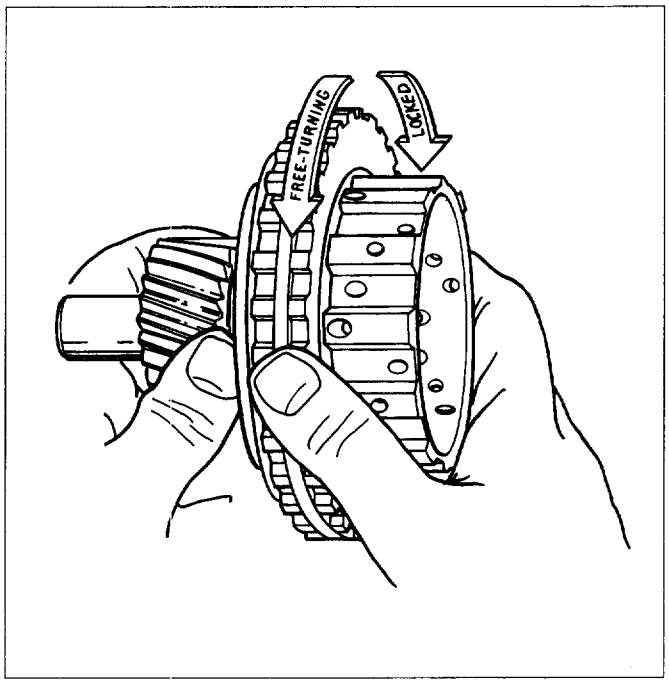

Fig. 7A-75

SECOND CLUTCH

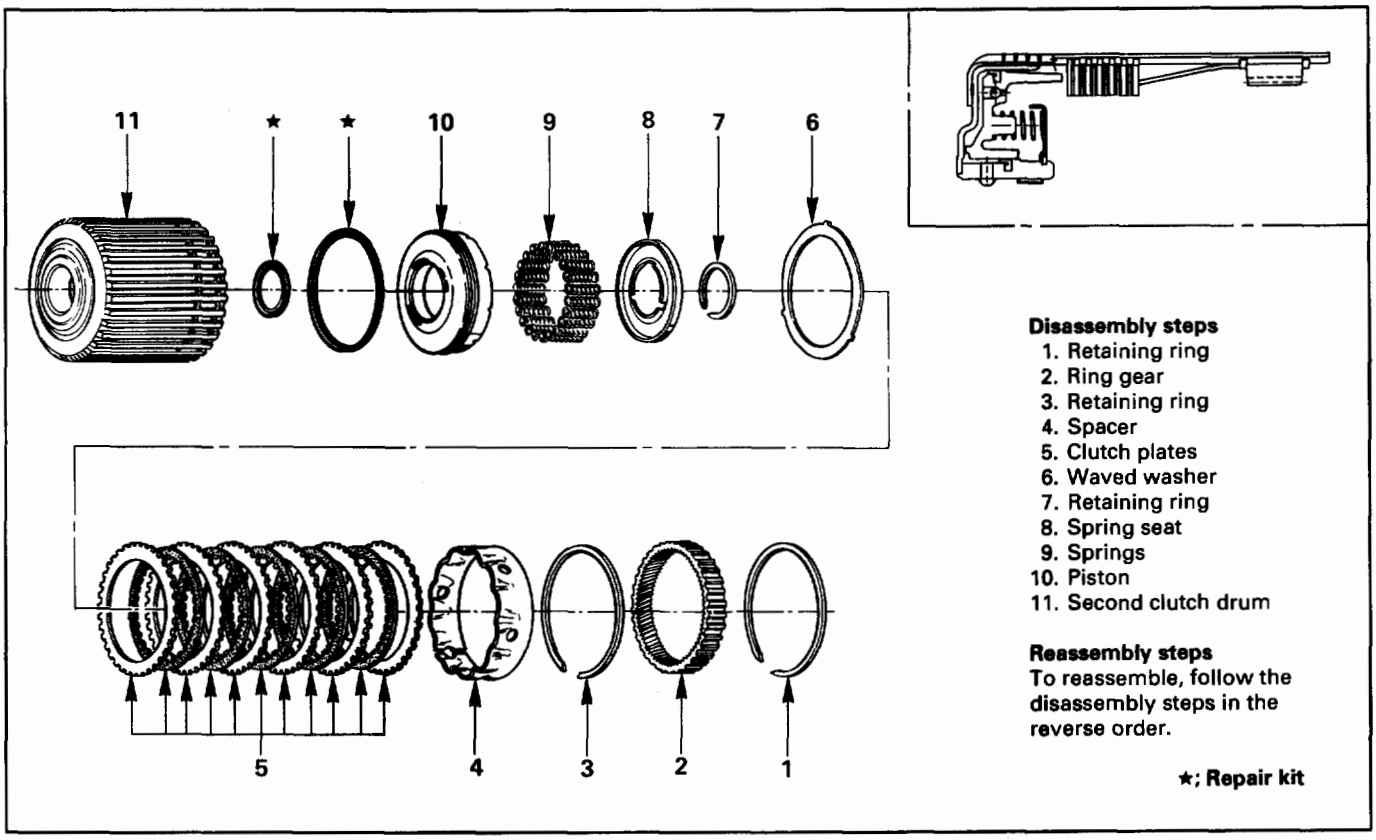

Fig. 7A-76

DISASSEMBLY

1. **Retaining ring**
2. **Ring gear**
3. **Retaining ring**
4. **Spacer**
5. **Clutch plates**
6. **Waved washer**
7. **Retaining ring (Fig. 7A-77)**
   - Compress the spring seat. Compressor: J-23327

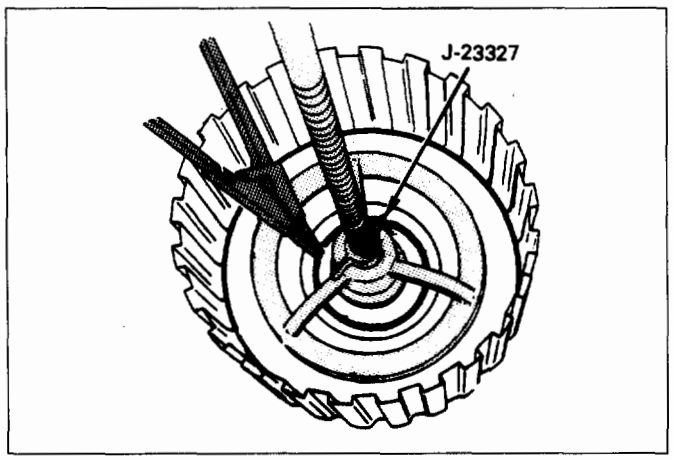

Fig. 7A-77

8. **Spring seat**
9. **Springs**
10. **Piston**
11. **Second clutch drum**

INSPECTION AND REPAIR

Visual check

- If any damage, deformation or local wear is found in a retaining ring, ring gear, spacer, clutch plates, piston seals, return spring or spring seat, replace it.

Operation check

- Shake piston and listen for check ball movement. Movement indicates proper check ball operation. Replace piston if check ball is missing or falls out.

REASSEMBLY

11. Second clutch drum

10. Piston (Fig. 7A-78)

- Install piston assembly into the second clutch drum. Lubricate the lip seal with liberal amounts of transmission fluid. Use the installer to protect the outer piston lip seal.

NOTE:
Lip of the seals point toward front of transmission.
Second clutch piston installer: J-23080-A

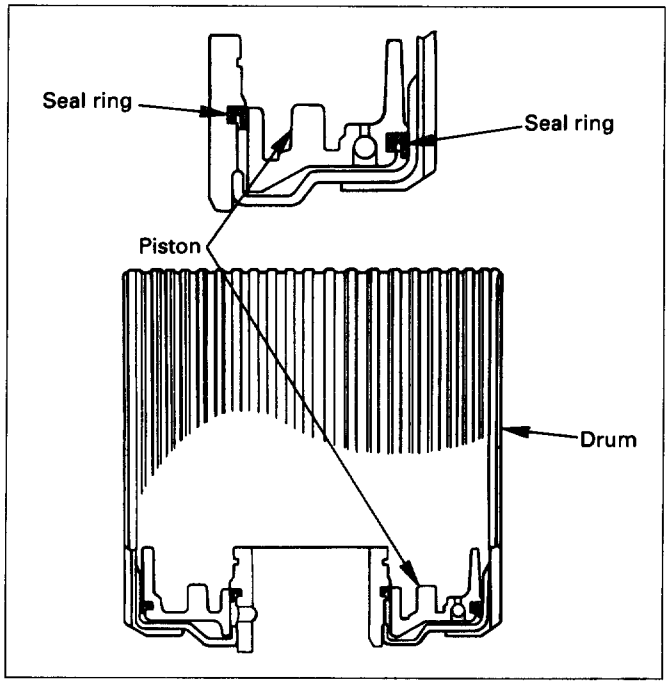

Fig. 7A-78

9. Springs

8. Spring seat

7. Retaining ring

- Install twenty-two piston springs and spring seat on the second clutch piston. Place retaining ring onto spring seat.
- Use the compressor to compress the piston springs.
  Compressor: J-23327

NOTE:
Do not let spring seat catch in ring groove.

6. Waved plate

5. Clutch plates

- Install clutch plates. Start with a steel plate and alternate with lined plates.

Align second clutch inner tangs.

4. Spacer

- Install spacer, with the fluted end toward clutch plates.

3. Retaining ring

2. Ring gear

1. Retaining ring

3-4 ACCUMULATOR PISTON

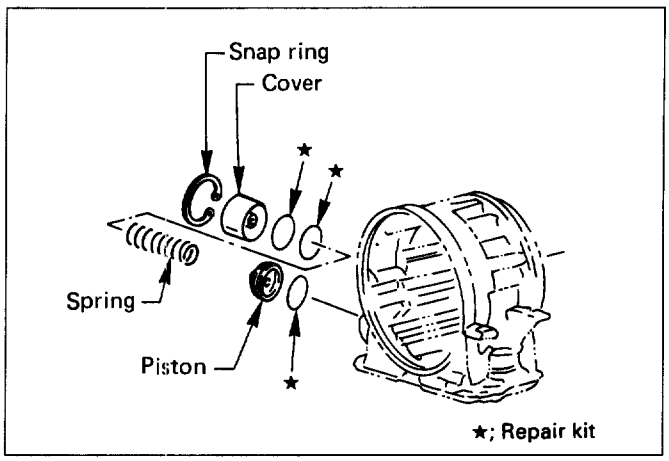

Fig. 7A-79

DISASSEMBLY

1. Snap ring (Fig. 7A-80)

- Install cover compressor on adapter case. Compress piston cover. Remove snap ring.
  Compressor: J-38559-A

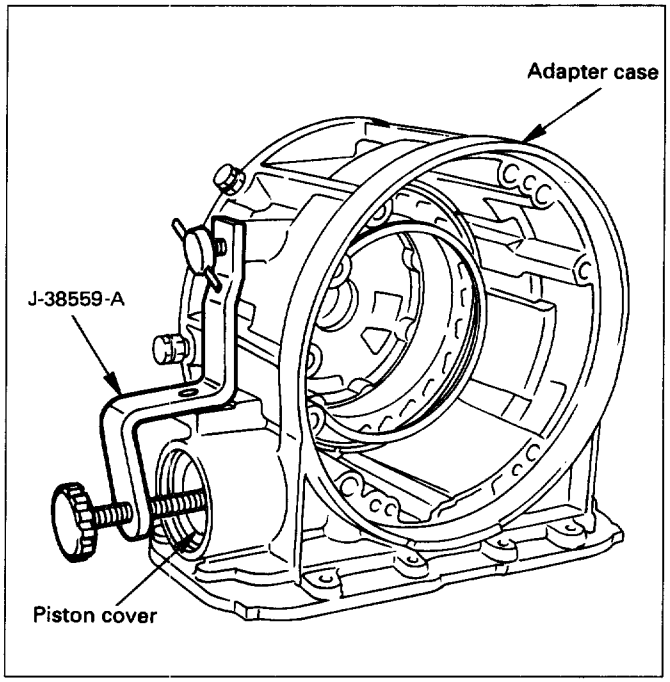

Fig. 7A-80

2. Cover (Fig. 7A-81)

- Install cover remover to center hole of cover.
  Use slide hammer to remove cover.
  Cover remover : J-41096
  Adapter : J-38584
  Slide hammer : J-23907

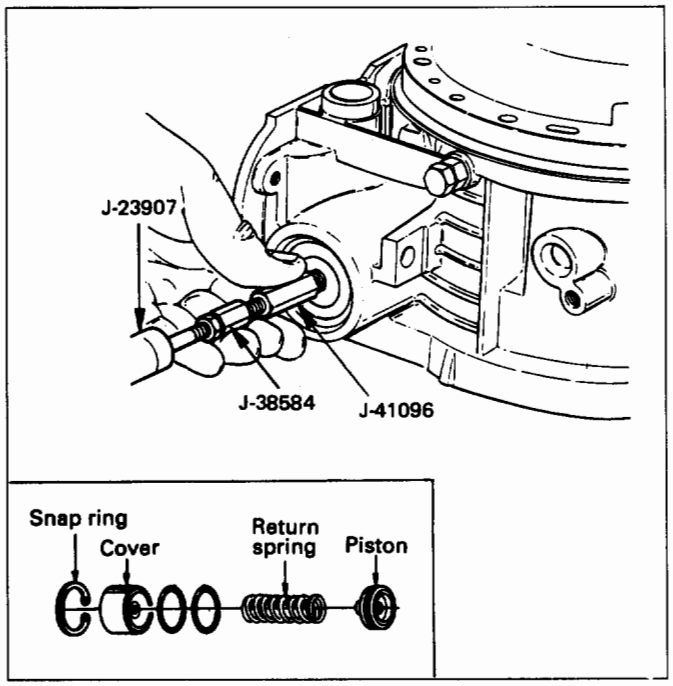

Fig. 7A-81

3. Spring

4. Piston

INSPECTION AND REPAIR

Visual Check

- If any damage, deformation or wear is found in a return spring, piston or piston cover, replace it.

REASSEMBLY

4. Piston (Fig. 7A-82)

- Place the fitter into adaptor case and push the piston into position, using suitable diameter tube.
  Piston fitter: J-38553

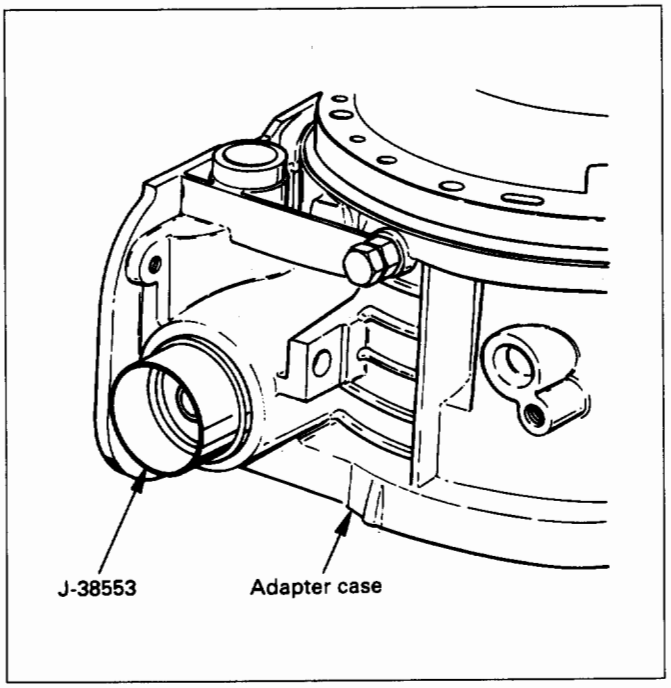

Fig. 7A-82

3. Spring

2. Cover (Fig. 7A-83)

- Install cover, using compressor tool.
  Compressor: J-38559-A

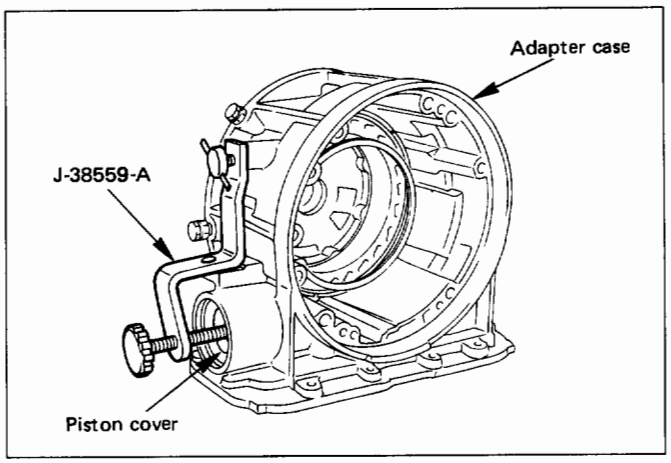

Fig. 7A-83

1. Snap ring

- Install snap ring in groove.

REVERSE CLUTCH PISTON AND CENTER SUPPORT

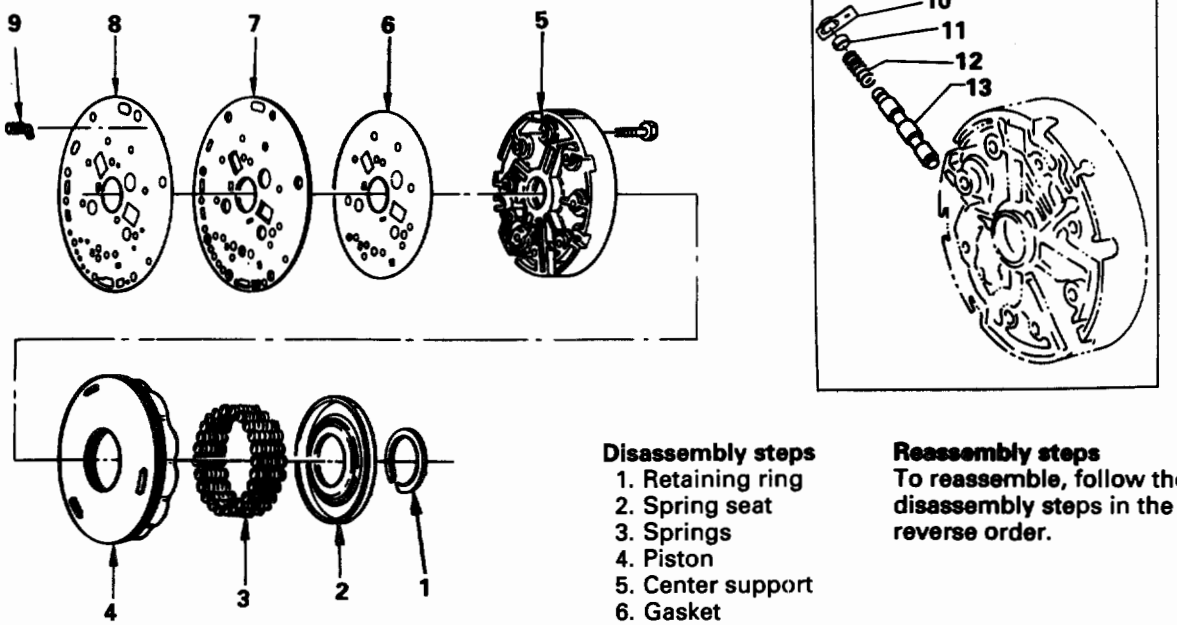

Disassembly steps
1. Retaining ring
2. Spring seat
3. Springs
4. Piston
5. Center support
6. Gasket
7. Transfer plate
8. Gasket
9. Restrictor
10. Retainer plate
11. Plug
12. Spring
13. Overrun lock out valve

Reassembly steps
To reassemble, follow the disassembly steps in the reverse order.

Fig. 7A-84

DISASSEMBLY

1. **Retaining ring (Fig. 7A-85)**
   - Install the tool on spring seat.
   - Compress the spring seat.
     Compressor: J-23327

NOTE:
Do not over-stress the springs and seat, as this will cause damage to the spring seat.

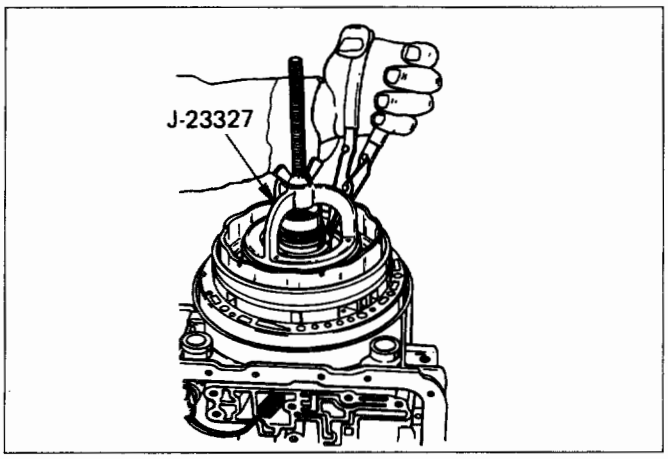

Fig. 7A-85

2. **Spring seat**
3. **Springs**
4. **Piston**
5. **Center support**
   - Remove 8 bolts from center support. Remove center support from adapter case.
6. **Gasket**
7. **Transfer plate**
8. **Gasket**
9. **Restrictor**
10. **Retainer plate**
11. **Plug**
12. **Spring**
13. **Overrun lock out valve**

INSPECTION AND REPAIR

Visual check
- If any damage, deformation or local wear is found in a retaining ring, return spring, spring retainer, piston or center support, replace it.

REASSEMBLY

13. Overrun lock out valve

12. Spring

- Install overrun lock out valve and spring.

NOTE:
Ensure correct assembly of valve. The spring should be located over the long small diameter end.

11. Plug

10. Pin

9. Restrictor (Fig. 7A-86)

- Place in the lube overdrive channel in the adapter case housing.

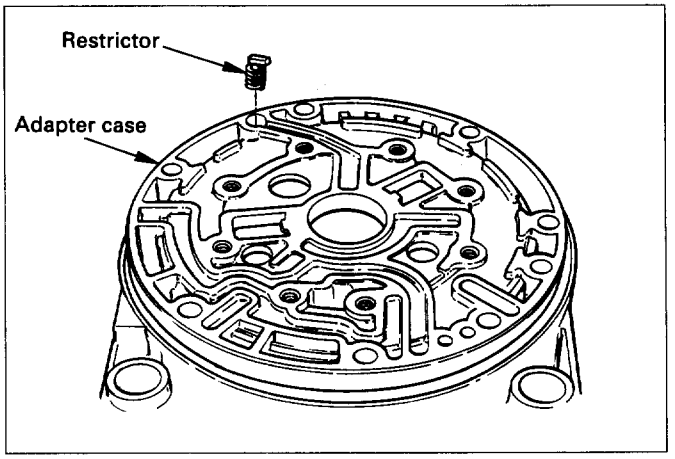

Fig. 7A-86

8. Gasket

7. Transfer plate

6. Gasket

5. Center support

- Install center support with 8 bolts.

Torque N·m (lb·ft)	25 (18)

4. Piston

3. Springs

2. Spring seat

1. Retaining ring

- Install twenty four springs, spring seat and retaining ring.
- Install the tool.
- Compress retaining ring and springs.
- Seat snap ring in groove.
  Compressor: J-23327

OVERRUN CLUTCH AND TURBINE SHAFT

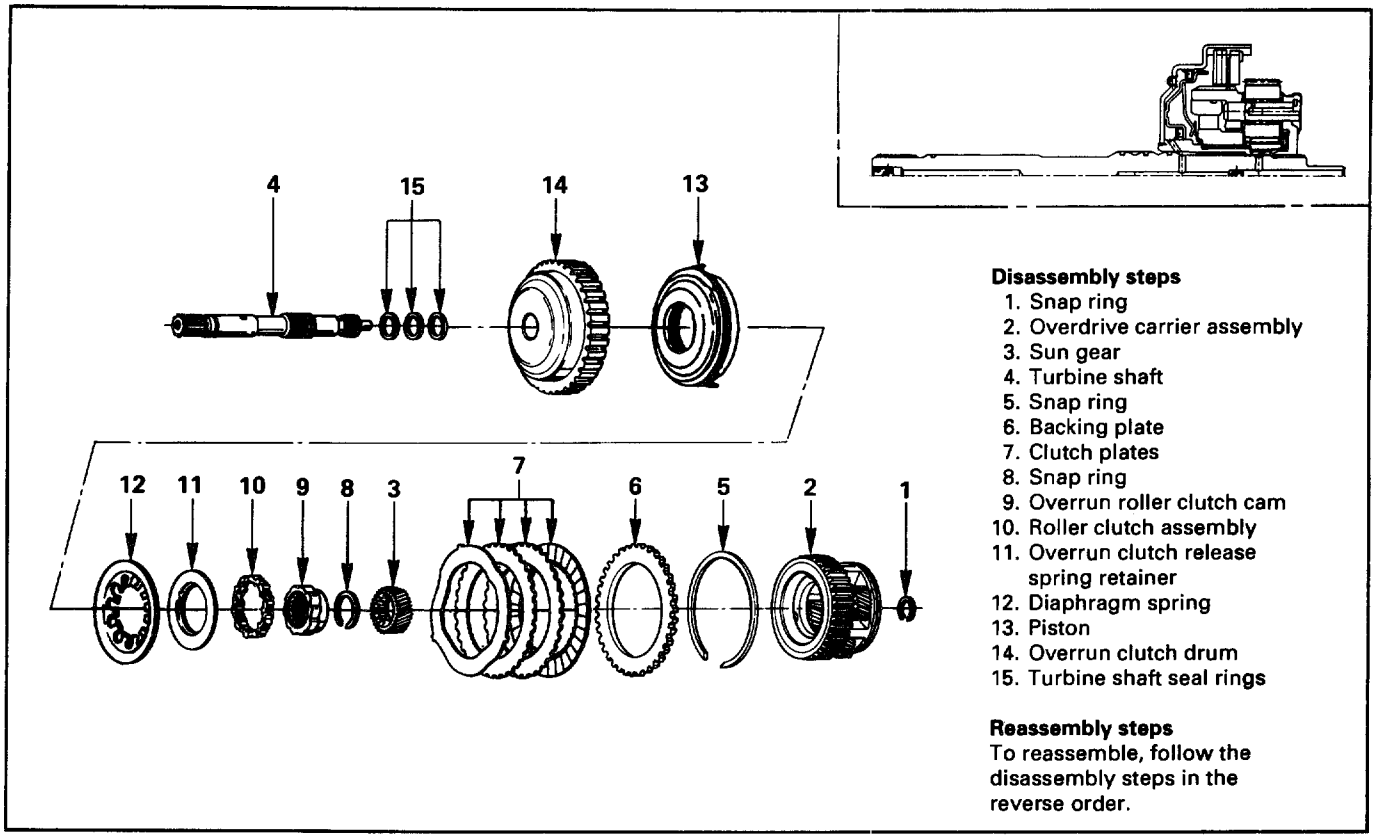

Fig. 7A-87

DISASSEMBLY

1. **Snap ring (Fig. 7A-88)**
   - Position overrun clutch assembly upright, using the overdrive internal gear as a support.
   - Remove snap ring.

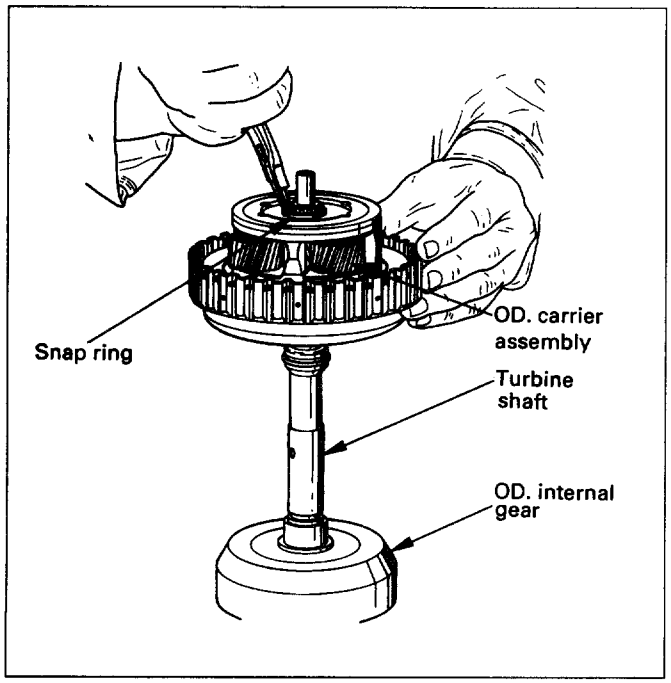

Fig. 7A-88

2. **Overdrive carrier assembly**
3. **Sun gear**
4. **Turbine shaft**
5. **Snap ring**
6. **Backing plate**
7. **Clutch plates**
8. **Snap ring (Fig. 7A-89)**
   - Compress piston return spring with compressor.

Compressor: J-23327-91

9. **Overrun roller clutch cam**
10. **Roller clutch assembly**
11. **Overrun clutch release spring retainer**
12. **Diaphragm spring**
13. **Piston**
14. **Overrun clutch drum**
15. **Turbine shaft seal rings**

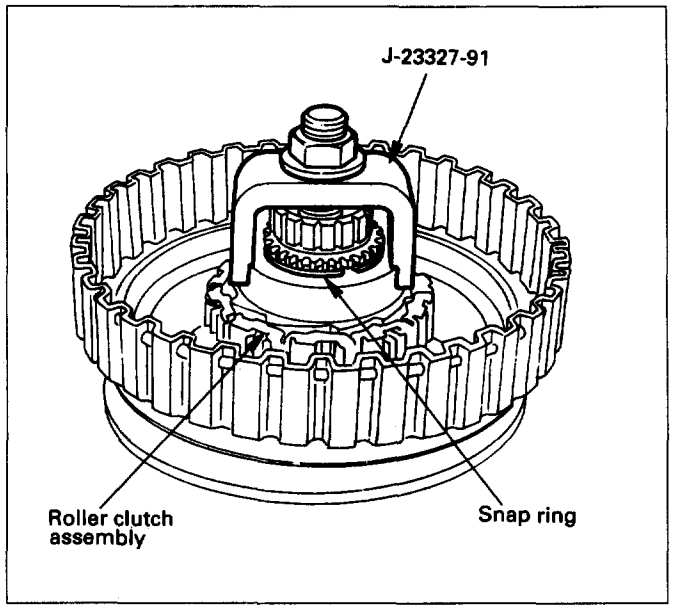

Fig. 7A-89

INSPECTION AND REPAIR

Overdrive carrier check (Fig. 7A-90)

- Check pinion end play with a feeler gage.

Clearance mm (in)	0.24-0.64 (0.0094-0.025)

If clearance is outside specified value, replace overdrive carrier assembly.

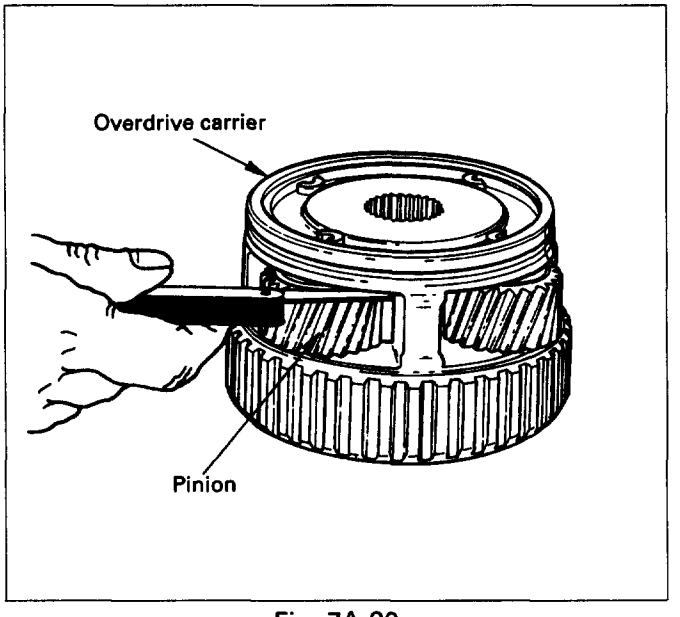

Fig. 7A-90

Visual check

- If any damage, deformation or local wear is found in a snap ring, diaphragm spring, or spring retainer, roller clutch assembly, turbine shaft, piston or clutch plates, replace it.

REASSEMBLY

15. Turbine shaft seal rings (Fig. 7A-91)

- Install seals with grease (petroleum jelly).

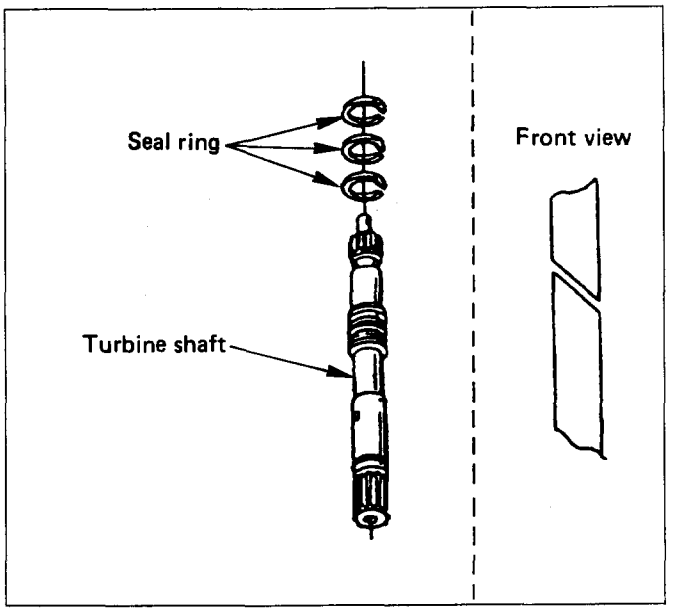

Fig. 7A-91

14. Overrun clutch drum

13. Piston (Fig. 7A-92, 7A-93)

- Install the inner installer on the drum.
- Pre-install piston into outer installer.
- Install overrun clutch piston assembly. Use the outer installer while pushing piston into drum. Installer: J-38555

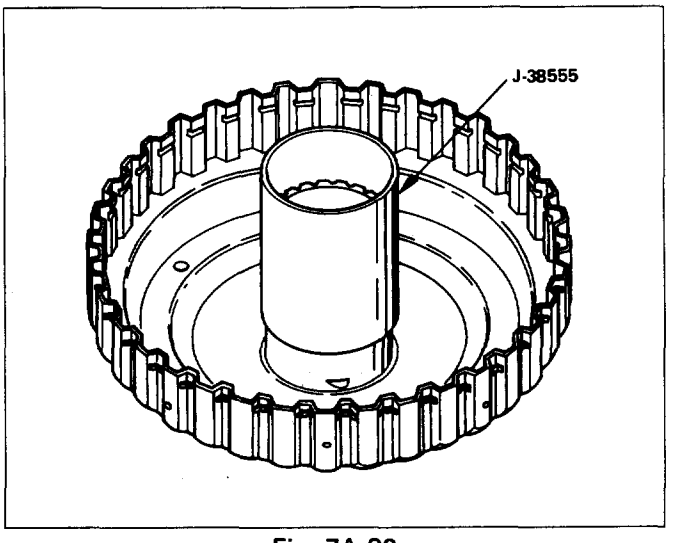

Fig. 7A-92

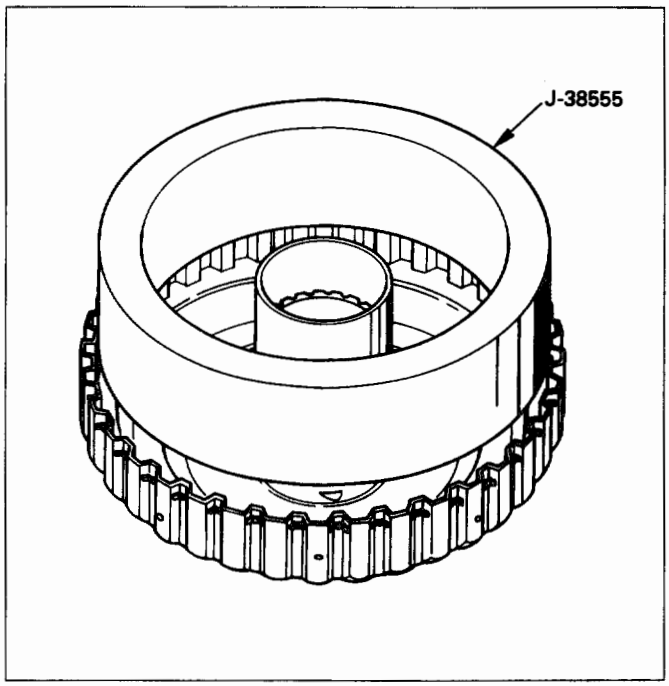

Fig. 7A-93

12. **Diaphragm spring**
11. **Overrun clutch release spring retainer**
10. **Roller clutch assembly**
9. **Overrun roller clutch cam**
8. **Snap ring**
   - Place snap ring loosely on spring retainer.
   - Hold the compressor in a vise. Compress piston return spring with compressor.
   - Set snap ring in ring groove.
     Compressor: J-23327-91
7. **Clutch plates**
   - Install clutch plates, start with steel plate and alternate with lined plates.
6. **Backing plate**
5. **Snap ring**
4. **Turbine shaft**
3. **Sun gear**
   - Overdrive sun gear, countersink pointing downwards.
2. **Overdrive carrier assembly**
   - Complete overdrive carrier assembly.

NOTE:
Turn the assembly in a counter-clockwise direction only until roller clutch enters the outer race. After assembly, rotate the assembly and listen for loose rollers.

1. **Snap ring**

MAIN DATA AND SPECIFICATIONS

GENERAL SPECIFICATIONS

				Remarks
Model			THM 4L30-E	
Engine			V6 3.2L 6VD1	DOHC & SOHC
Type			Automatic four speed overdrive in 4th gear lock-up clutch torque converter	
Control systems	Shift control		Hydraulic	
	Shift pattern		Electronic	
	Shift quality		Electronic	
	Lock-up clutch		Electronic	
Gear ratio	1st		2.856	
	2nd		1.618	
	3rd		1.000	
	4th (O/D)		0.723	
	Reverse		2.000	
Gear set			Noiseless, high torque capability	
Oil used	Name		ATF DEXRON®-III	
	Q'ty	liter (qt)	8.6 (9.1)	
Torque converter			2150 ± 150 (SOHC) 2200 ± 150 (DOHC)	Stall speed (rpm)
Reverse clutch		RC	4	Number of discs
Second clutch		C2	5	
Third clutch		C3	5	
Brake band			Double wrap	
Fourth clutch		C4	2	Number of discs
Overrun clutch		OC	2	
Overdrive		OFW	10	Number of rollers
Principal		PFW	26	Number of sprags
Ravigneaux	Input sun gear		30	Number of teeth
	Pinion gear		19	
	Long pinion		23	
	Ring gear		90	
	Long pinion		19	
	Output sun gear		46	
Overdrive	Sun gear		31	
	Pinion gear		24	
	Ring gear		81	

TORQUE SPECIFICATIONS

N·m (lb·ft)

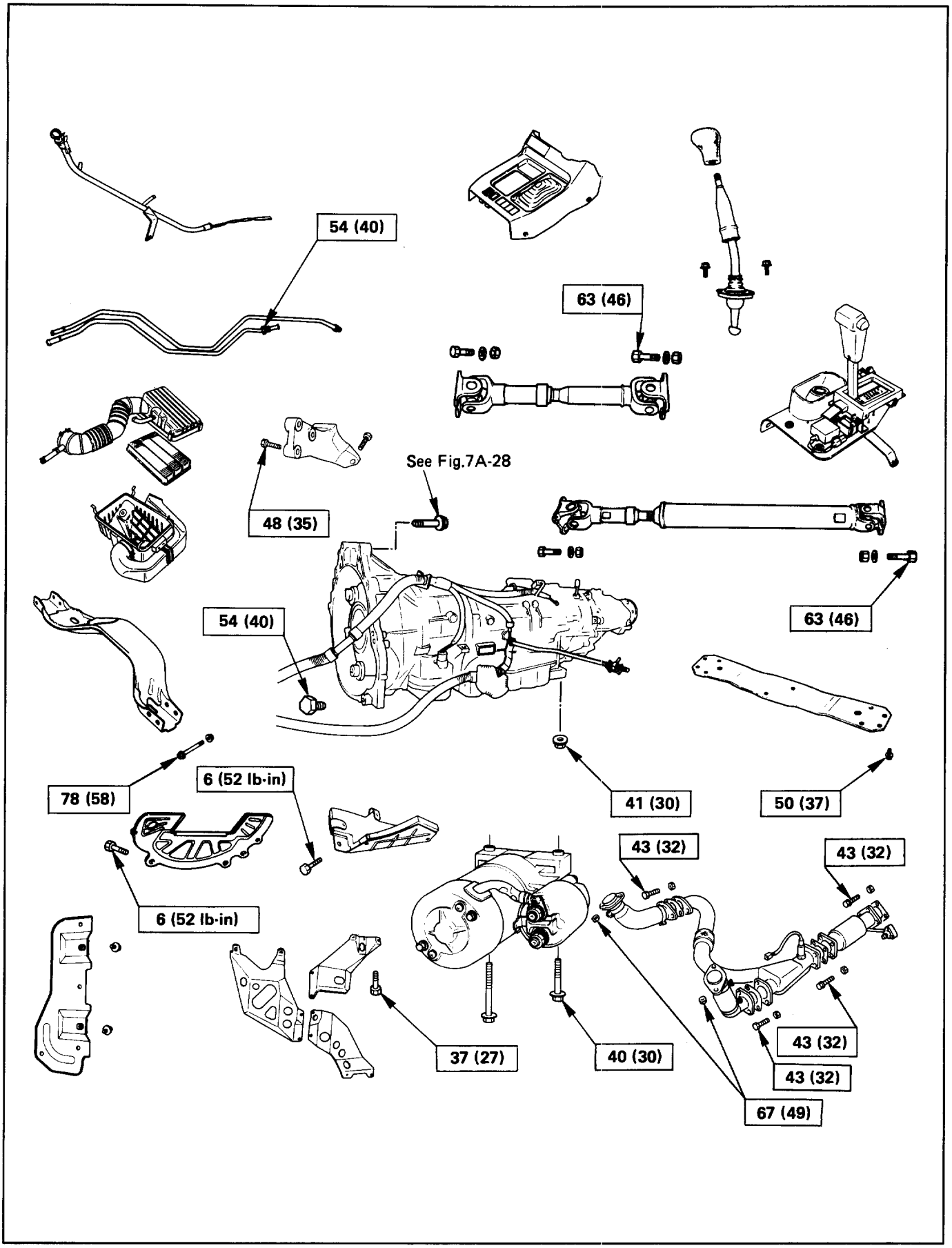

Fig. 7A-94

TORQUE SPECIFICATIONS (Cont'd)

N·m (lb·ft)

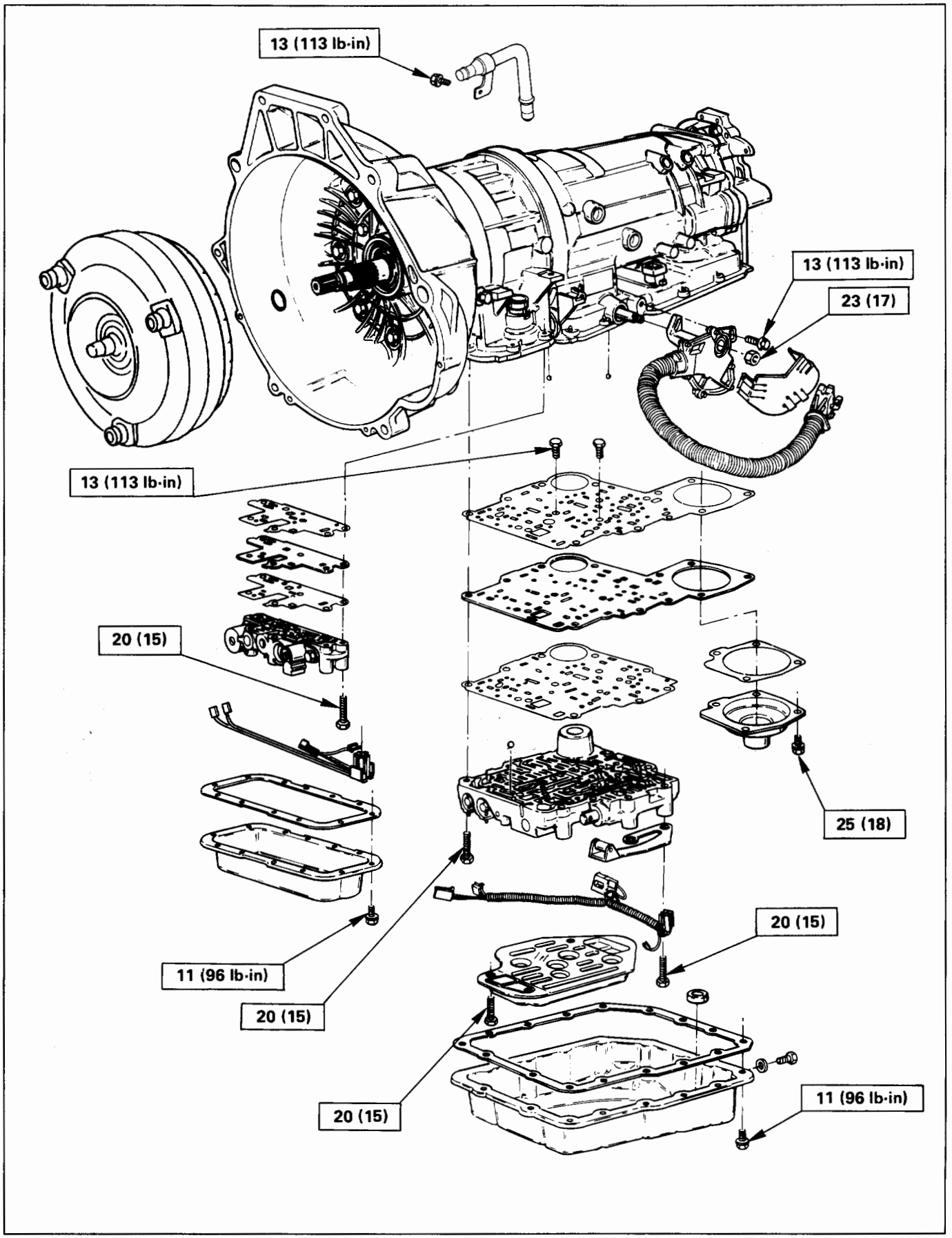

Fig. 7A-95

TORQUE SPECIFICATIONS (Cont'd)

N·m (lb·ft)

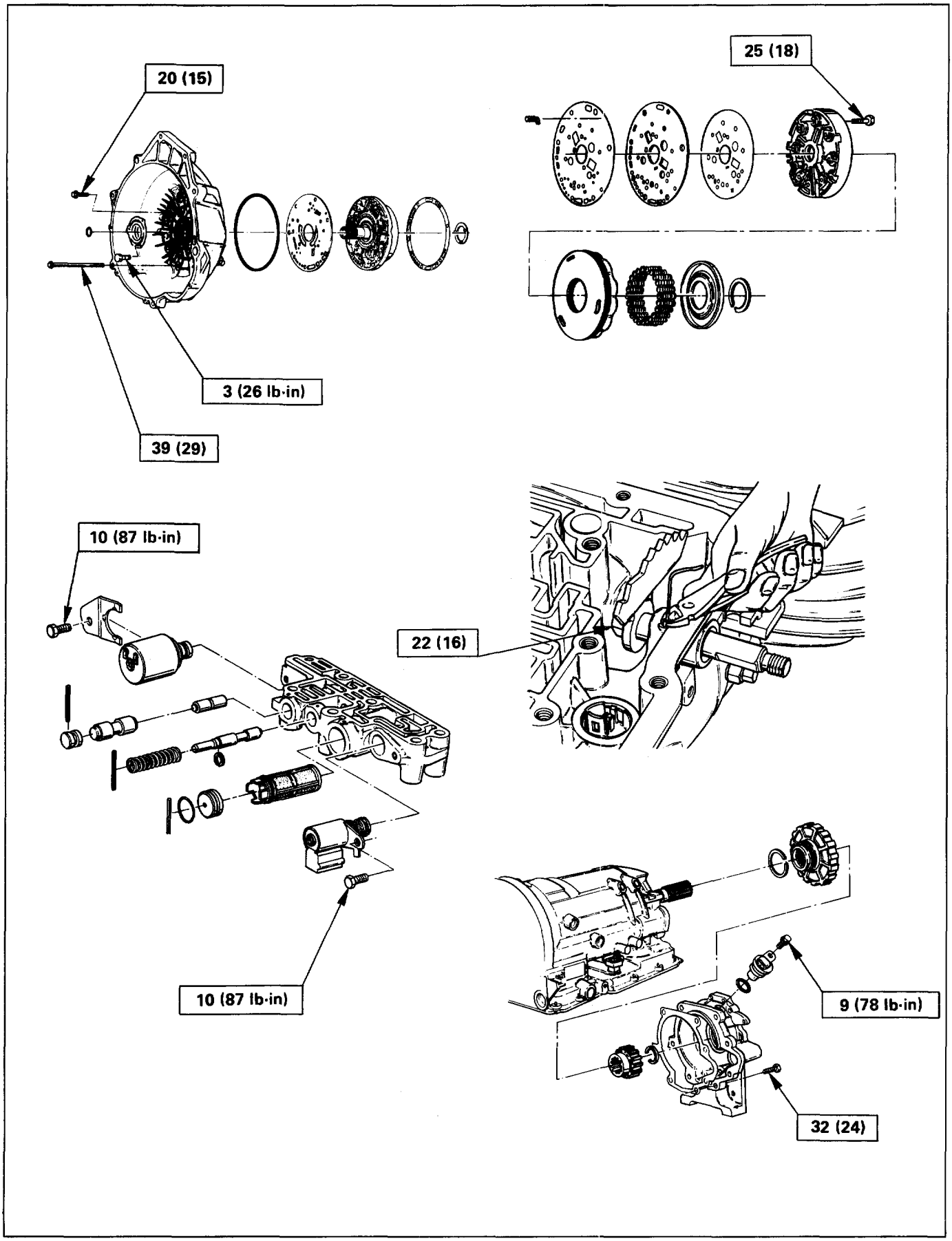

Fig. 7A-96

SPECIAL TOOLS

ILLUSTRATION	TOOL NO. TOOL NAME
	J-23075 Spring compressor (For servo piston)
	J-38450 Third clutch snap ring compressor
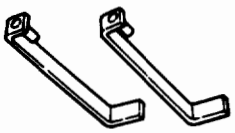	**J-23075-12** Third clutch spring compressor adapter (Use with J-23075)
	J-23084 Third clutch piston installer
	J-23327 Third clutch spring compressor
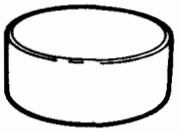	**J-23080-A** Second clutch piston installer
	J-23085-A Selective washer gaging tool
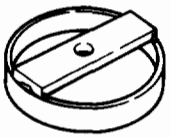	**J-23327-90** Fourth clutch spring compressor (Use with J-23327)
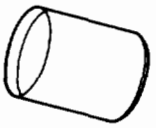	**J-38553** 3/4 Accumulator piston fitter
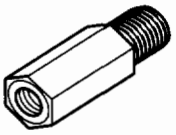	**J-41096** Cover remover (Use with J-38584)

ILLUSTRATION	TOOL NO. TOOL NAME
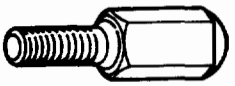	**J-38584** Slide hammer adapter (Use with J-23907)
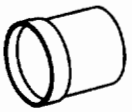	**J-38554** Fourth clutch piston fitter
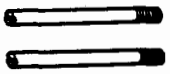	**J-38588** Guide pins: adapter case to main case
	J-38555 Overrun clutch piston seal installer set
	J-3387-2 Guide pins: gasket and transfer plate to valve body
	J-25022 Turbine shaft puller (Use with J-24773-1)
	J-23129 Oil seal remover (Use with J-23907 and J-38584)
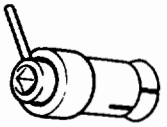	**J-38557** Oil pump centering tool
	J-23082-01 Oil pump rotation tool
	J-25025-B Guide pins: valve body to main case

ILLUSTRATION	TOOL NO. TOOL NAME
	J-38438 Servo piston fitter
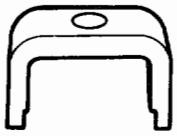	**J-23327-91** Overrun clutch spring compressor
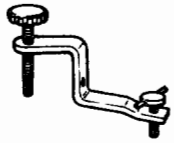	**J-38559-A** 3/4 Accumulator piston cover compressor
	J-8763-02 Holding fixture
	J-36797 A/T extension housing oil seal installer (Inside)
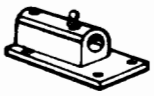	**J-3289-20** Holding fixture base
	J-29770-A Pressure gauge
	J-24773-1 End play fixture (Use with J-25022)
	J-23907 Slide hammer

ILLUSTRATION	TOOL NO. TOOL NAME
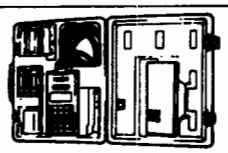	**J-38770-1** TECH1 (KIT)
	TK02500B-1 Transmission cartridge
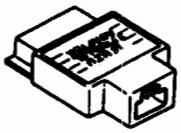	**TA02279-B** Adapter
	J-38770-4 Battery cable adapter

4L30-E PARTS LIST

CASE AND ASSOCIATED PARTS

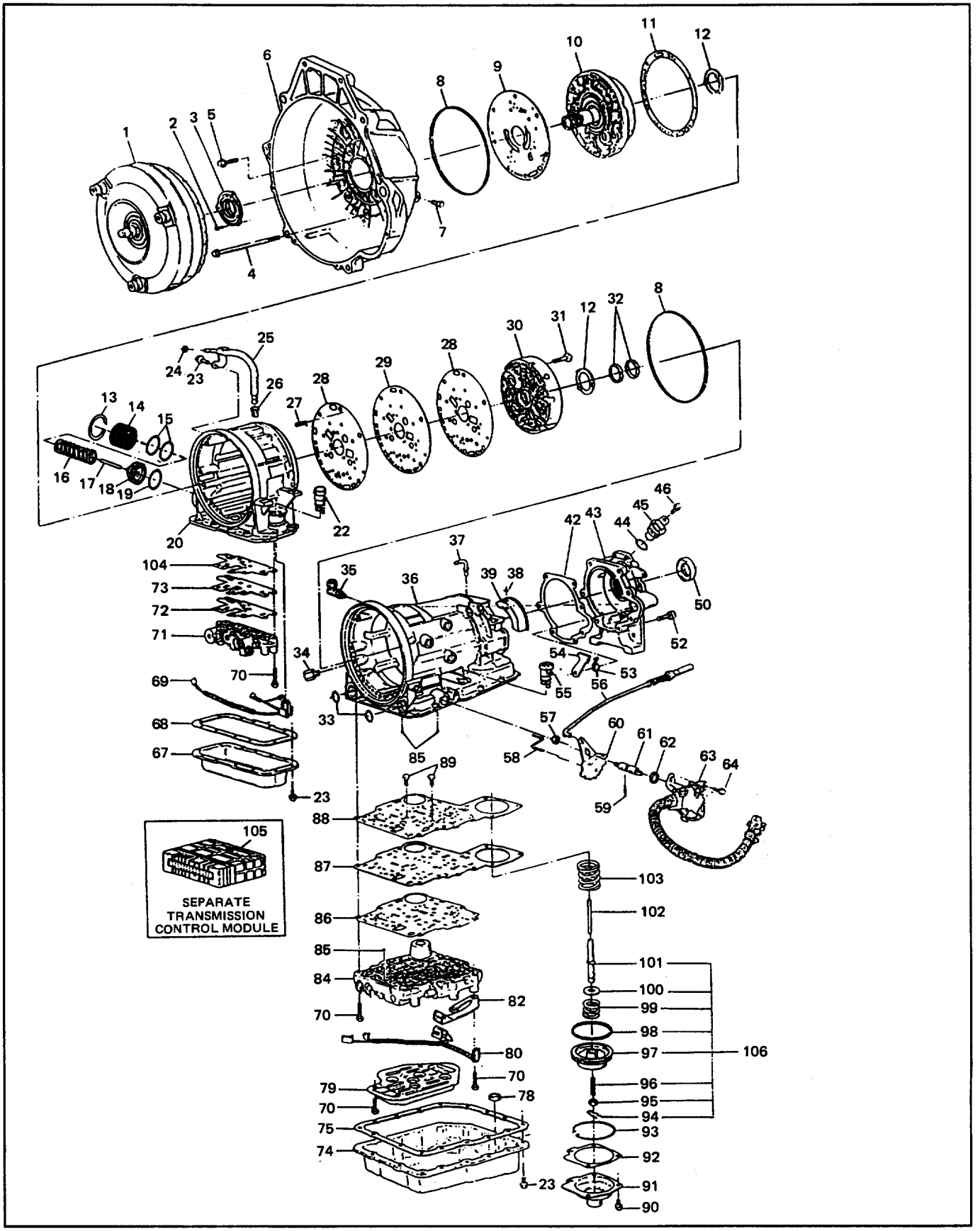

Fig. 7A-97

CASE AND ASSOCIATED PARTS

1	Torque converter	36	Case, main	72	Gasket, adapter valve body
2	Screw, seal ring assembly	37	Breather, pipe	73	Plate, adapter valve body/transfer
3	Seal ring assembly, converter housing	38	Seal, O-ring	74	Pan, bottom/main case
4	Screw, converter housing/main case	39	Reservoir	75	Gasket, bottom pan/main case
5	Screw, converter housing/oil pump	42	Gasket, extension case	78	Magnet, chip collector
6	Housing, converter	43	Extension assembly	79	Filter oil
7	Plug, converter housing	44	Seal, O-ring/speed sensor	80	Harness assembly, main case
8	Seal, O-ring	45	Sensor assembly, speed	82	Roller & spring assembly, manual detent
9	Wear plate, oil pump body	46	Screw, speed sensor		
10	Pump assembly, oil			84	Valve body assembly, main case
11	Gasket			85	Ball, check
12	Washer, thrust selective			86	Gasket, main V.B./Transfer plate
13	Ring, snap	50	Seal, extension assembly	87	Plate, main V.B./Transfer
14	Cover, 3-4 accumulator piston			88	Gasket, transfer/main case
15	Seal, O-ring, 3-4 accumulator	52	Screw, extension/main case	89	Screw, transfer plate on V.B.
16	Spring, 3-4 accumulator piston	53	Spring, parking pawl lock	90	Screw, servo cover
17	Pin, 3-4 accumulator piston	54	Pawl, parking lock	91	Cover, servo piston
18	Piston, 3-4 accumulator	55	Connector, electrical/main case	92	Gasket, cover/servo piston
19	Ring, 3-4, accumulator piston	56	Actuator assembly, parking lock	93	Ring, retaining servo piston
20	Case, adapter	57	Nut, parking lock lever	94	Clip, servo piston
22	Connector, electrical/adapter case	58	Link, manual valve	95	Nut, servo screw
23	Screw & conical washer assembly	59	Pin, spring	96	Screw, servo piston
24	Seal O-ring, filler tube	60	Lever, parking lock & range selelector	97	Piston, servo
25	Tube assembly, fluid filler			98	Seal, ring/servo piston
26	Seal, filler tube	61	Shaft, selector	99	Spring, cushion/servo piston
27	Restrictor, oil	62	Seal, selector shaft	100	Seat, cushion spring
28	Gasket, Transfer plate/adapter	63	Mode switch assembly	101	Sleeve, servo piston adjust
29	Plate, transfer adapter/center support	64	Screw & conical washer assembly	102	Rod, apply/servo piston
30	Support assembly, center	65	Shield, mode switch	103	Spring, return/servo piston
31	Screw, center support	67	Pan, Bottom/Adapter case	104	Gasket, adapter case/transfer plate
32	Ring, oil seal	68	Gasket, bottom pan/adapter case	105	Transmission control module
33	Seal, O-ring main case	69	Harness assembly, adapter case	106	Servo piston assembly
34	Fitting, cooler	70	Screw, valve body		
35	Fitting assembly, cooler	71	Valve body assembly, adapter case		

PUMP ASSEMBLY

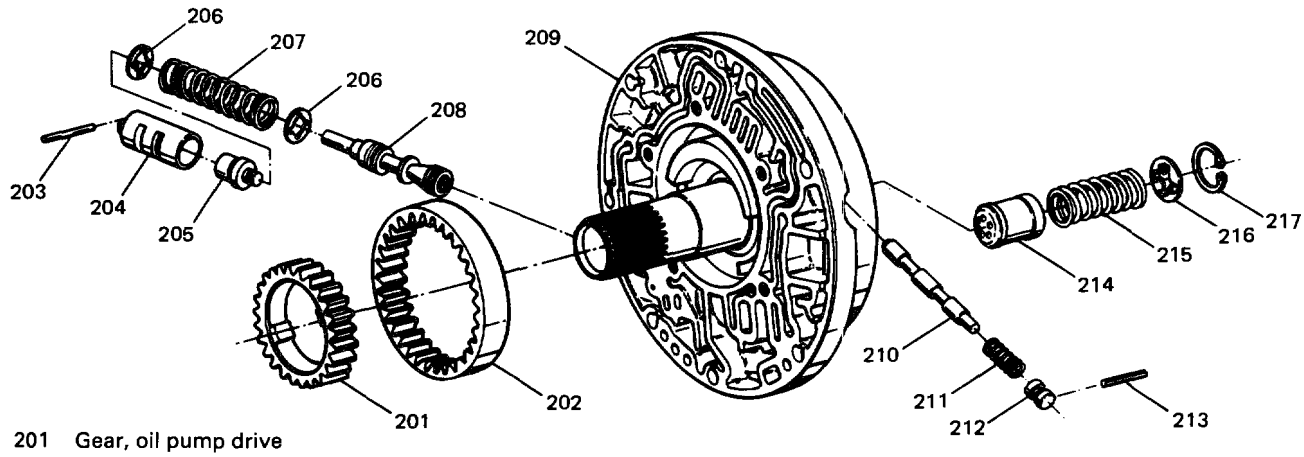

201	Gear, oil pump drive	210	Valve, converter clutch control
202	Gear, oil pump driven	211	Spring, converter clutch control valve
203	Pin, boost valve sleeve	212	Plug, converter clutch control valve
204	Sleeve, boost valve	213	Pin, spring
205	Valve, boost	214	Piston, throttle signal accumulator
206	Seat, spring/pressure regulator valve	215	Spring, throttle signal accumulator
207	Spring, pressure regulator valve	216	Seat, spring/throttle signal accumulator
208	Valve, pressure regulator	217	Ring, snap/throttle signal accumulator
209	Pump assembly, oil		

Fig. 7A-98

VALVE BODY ASSEMBLIES

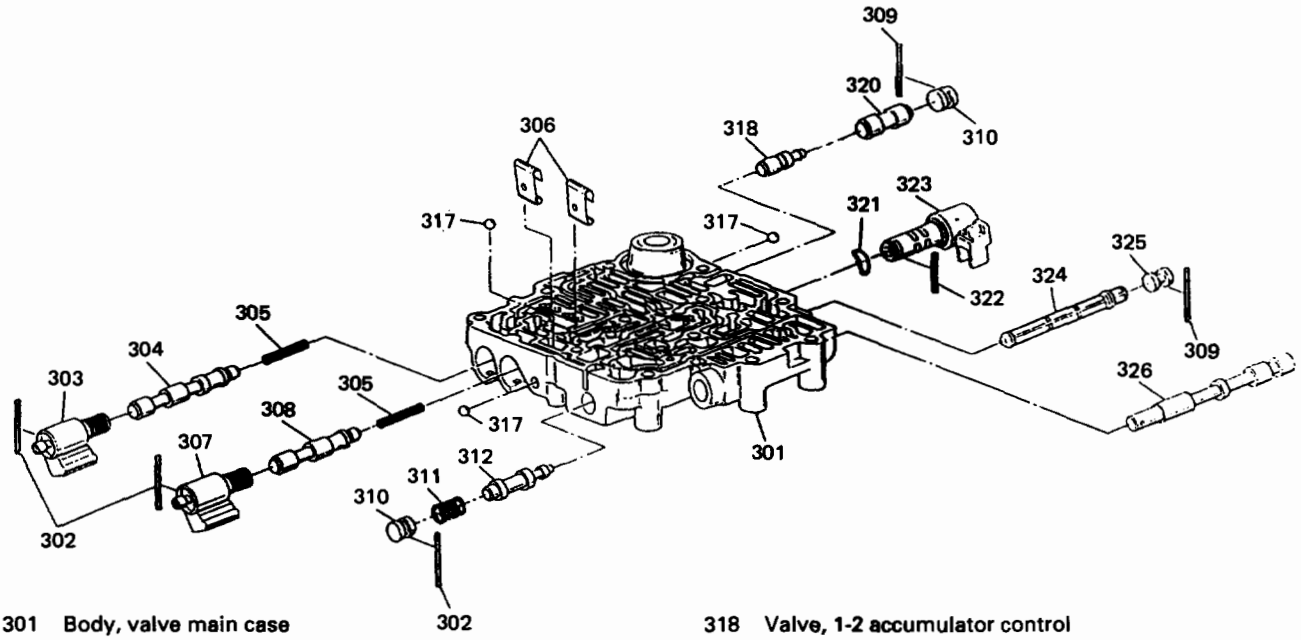

301 Body, valve main case
302 Pin, spring
303 Solenoid assembly, on/off N.C.
304 Valve, 1-2 & 3-4 shift
305 Spring, 1-2 & 3-4 (2-3) shift
306 Retainer, valve
307 Solenoid assembly, ON/OFF N.O.
308 Valve, 2-3 shift
309 Pin, spring
310 Plug, valve bore
311 Spring, valve low pressure control
312 Valve, low pressure control
317 Ball, check
318 Valve, 1-2 accumulator control
320 Valve, 1-2 accumulator
321 Washer, waved PWM solenoid
322 Pin, solenoid PWM
323 Solenoid assembly, band control PWM
324 Screen assembly, PWM solenoid
325 Plug, screen
326 Valve, manual

Fig. 7A-99

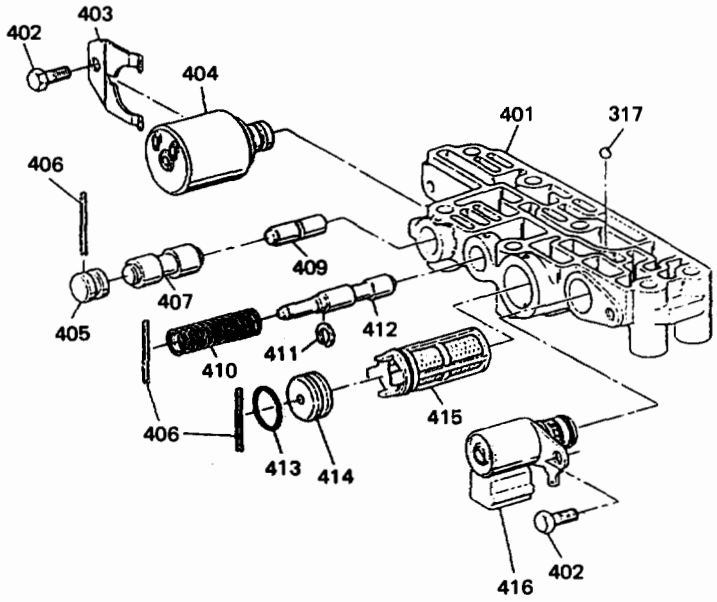

317 Ball, check
401 Body, valve/adapter case
402 Screw, solenoid force motor
403 Retainer, force motor
404 Solenoid, force motor
405 Plug, 3-4 accumulator
406 Pin, spring
407 Valve, 3-4 accumulator
409 Valve, 3-4 accumulator control
410 Spring, feed limit valve
411 Ring, retainer
412 Valve, feed limit
413 Seal, O-ring plug filter
414 Plug, screen
415 Screen assembly, force motor
416 Solenoid, torque conv. clutch on/off N.C.

Fig. 7A-100

OVERDRIVE INTERNAL COMPONENTS

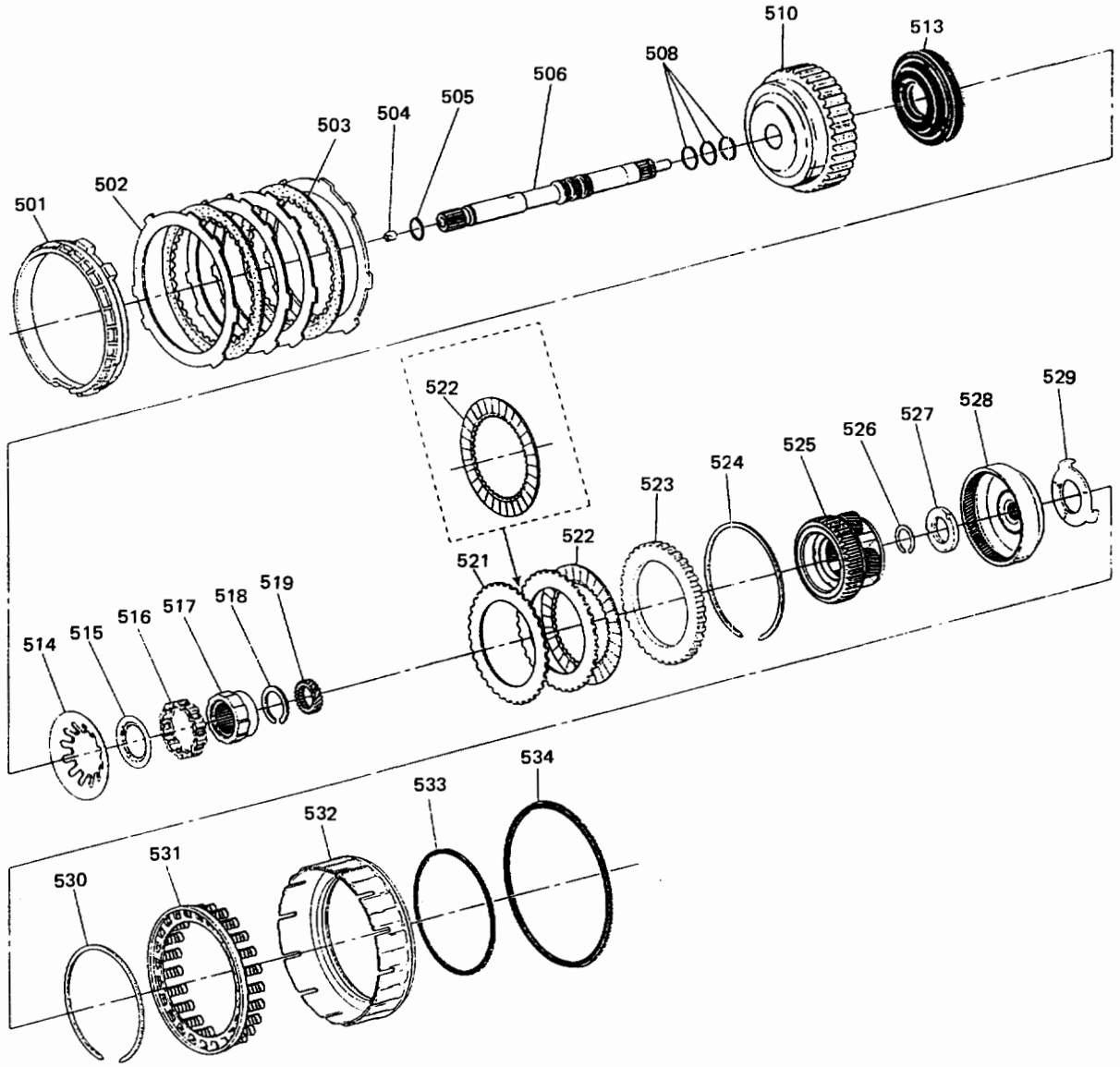

501 Retainer, 4th clutch
502 Plate, 4th clutch (steel)
503 Plate assembly, 4th clutch (lined)
504 Retainer & ball assembly, check valve
505 Seal, O-ring/turbine shaft
506 Shaft, turbine
508 Ring, oil seal/turbine shaft
510 Housing, overrun clutch
513 Piston, overrun clutch
514 Spring, overrun clutch release
515 Retainer, release spring/overrun clutch
516 Roller assembly, overdrive clutch
517 Cam, overdrive roller clutch
518 Ring, snap/overrun clutch hub
519 Gear, overdrive sun
521 Plate, overrun clutch (steel)
522 Plate assembly, overrun clutch (lined)
523 Plate, backing/overrun clutch
524 Ring, snap/overrun clutch housing
525 Carrier assembly, overdrive complete
526 Ring, snap/turbine shaft/carrier
527 Bearing assembly, thrust
528 Gear, overdrive internal
529 Washer, thrust/internal gear/support
530 Ring, snap/adapter/4th clutch spring
531 Retainer & spring assembly, 4th clutch
532 Piston, 4th clutch
533 Seal, 4th clutch piston (inner)
534 Seal, 4th clutch piston (outer)

Fig. 7A-101

INTERNAL COMPONENTS

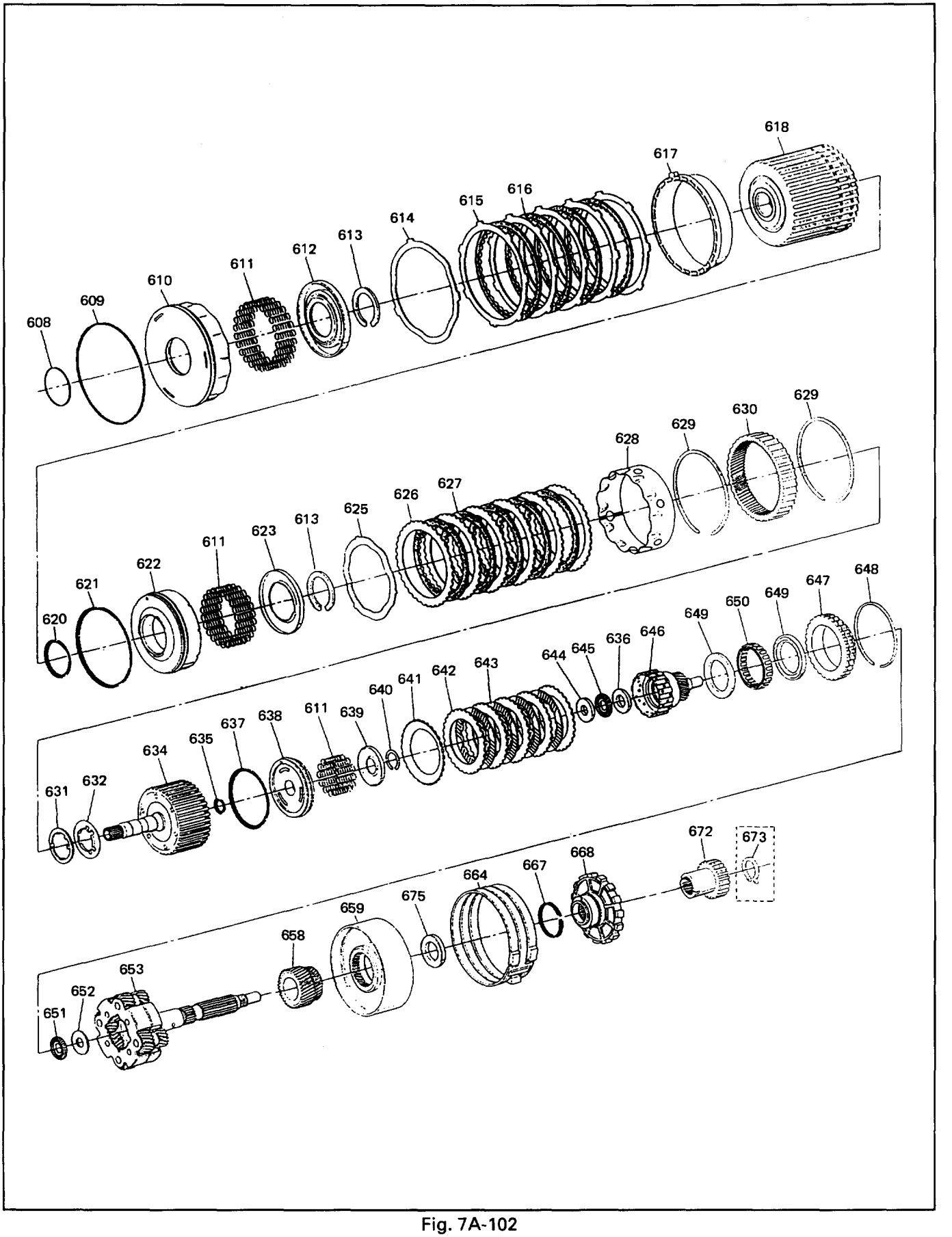

Fig. 7A-102

INTERNAL COMPONENTS

608 Seal, reverse clutch piston (inner)
609 Seal, reverse clutch piston (outer)
610 Piston, reverse clutch
611 Spring, piston clutch
612 Seat, spring/reverse clutch
613 Ring, Retaining
614 Plate, waved/reverse clutch
615 Plate, reverse clutch (steel)
616 Plate assembly, reverse clutch (lined)
617 Plate, reverse clutch pressure/selective
618 Drum assembly, 2nd clutch
620 Seal, 2nd clutch piston (Inner)
621 Seal, 2nd clutch piston (Outer)
622 Piston, 2nd clutch
623 Seat, spring/2nd clutch
625 Plate, waved/2nd clutch
626 Plate, 2nd clutch (Steel)
627 Plate assembly, 2nd clutch (Lined)
628 Spacer, 2nd clutch
629 Ring, retaining
630 Gear, ring
631 Washer, thrust/2nd clutch/3rd clutch
632 Thrust washer, clutch hub
634 Drum assembly, 3rd clutch
635 Seal, 3rd clutch piston (Inner)
636 Washer, retaining
637 Seal, 3rd clutch piston (Outer)
638 Piston 3rd clutch
639 Seat, spring/3rd clutch
640 Ring, retaining
641 Plate, spring cushion/3rd clutch
642 Plate, 3rd clutch (Steel)
643 Plate assembly, 3rd clutch (Lined)
644 Washer, thrust/input sun
645 Bearing, input shaft/gear assembly
646 Gear assembly, input sun
647 Race assembly, sprag
648 Ring, retaining/sprag
649 Ring, retaining
650 Cage assembly, sprag
651 Bearing, output shaft/input sun
652 Washer, output shaft/input sun
653 Carrier assembly, planetary
658 Gear, reaction sun
659 Drum, reaction sun
664 Band assembly, brake
667 Seal, ring/wheel parking lock
668 Wheel, parking lock
672 Wheel, speedo
673 Ring, retaining
675 Bearing, thrust assembly

CENTER SUPPORT ASSEMBLY

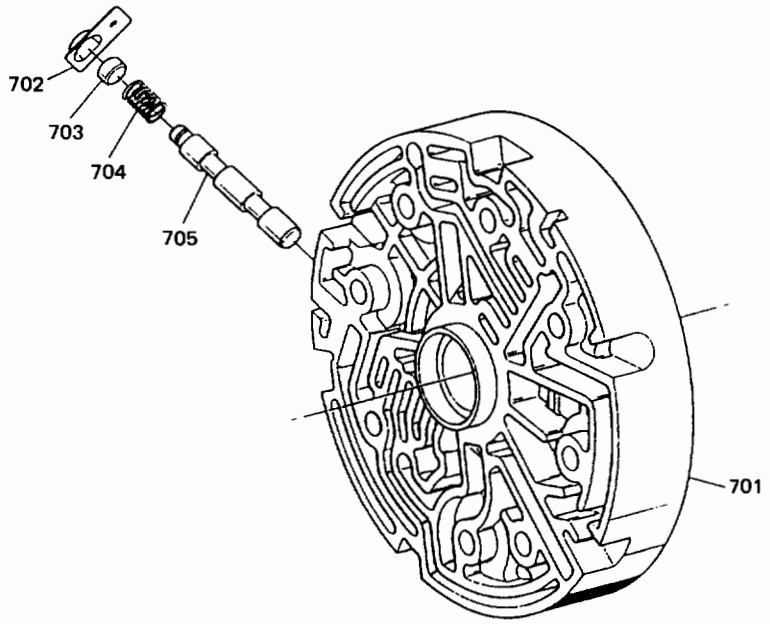

701 Center support
702 Retainer plate
703 Plug, lockout
704 Spring, overrun lockout
705 Valve, overrun lockout

Fig. 7A-103

SECTION 7B

MANUAL TRANSMISSION

CAUTION
When fasteners are removed, always reinstall them at the same location from which they were removed. If a fastener needs to be replaced, use the correct part number fastener for that application. If the correct part number fastener is not available, a fastener of equal size and strength (or stronger) may be used. Fasteners that are not reused, and those requiring thread locking compound, will be called out. The correct torque values must be used when installing fasteners that require torque. If the above conditions are not followed, parts or system damage could result.

CONTENTS

General Description 7B-1
Construction 7B-2
Diagnosis 7B-3
On-Vehicle Service 7B-4
Transmission 7B-4
Gear Control Box Assembly 7B-10
Unit Repair 7B-12
Transmission Case And Transfer Case 7B-12
Intermediate Plate With Gear Assembly Detent, Shift Arm, And Interlock Pin ... 7B-18
Reverse Gear And 5th Gear 7B-22
Top Gear Shaft, Main Gear Shaft And Counter Gear Shaft 7B-29
Main Data And Specifications 7B-39
General Specifications 7B-39
Torque Specifications 7B-40
Special Tools 7B-43

GENERAL DESCRIPTION

The MUA5C is a constant mesh transmission, synchronized in all speeds. The transmission is designed for ease of shifting and the quietest possible operation.

Principle parts of the transmission are the integral clutch housing, intermediate plate, the transfer case, the rear cover, and the gears.
The transmission control box and transfer control box are built into the transfer case.

CONSTRUCTION

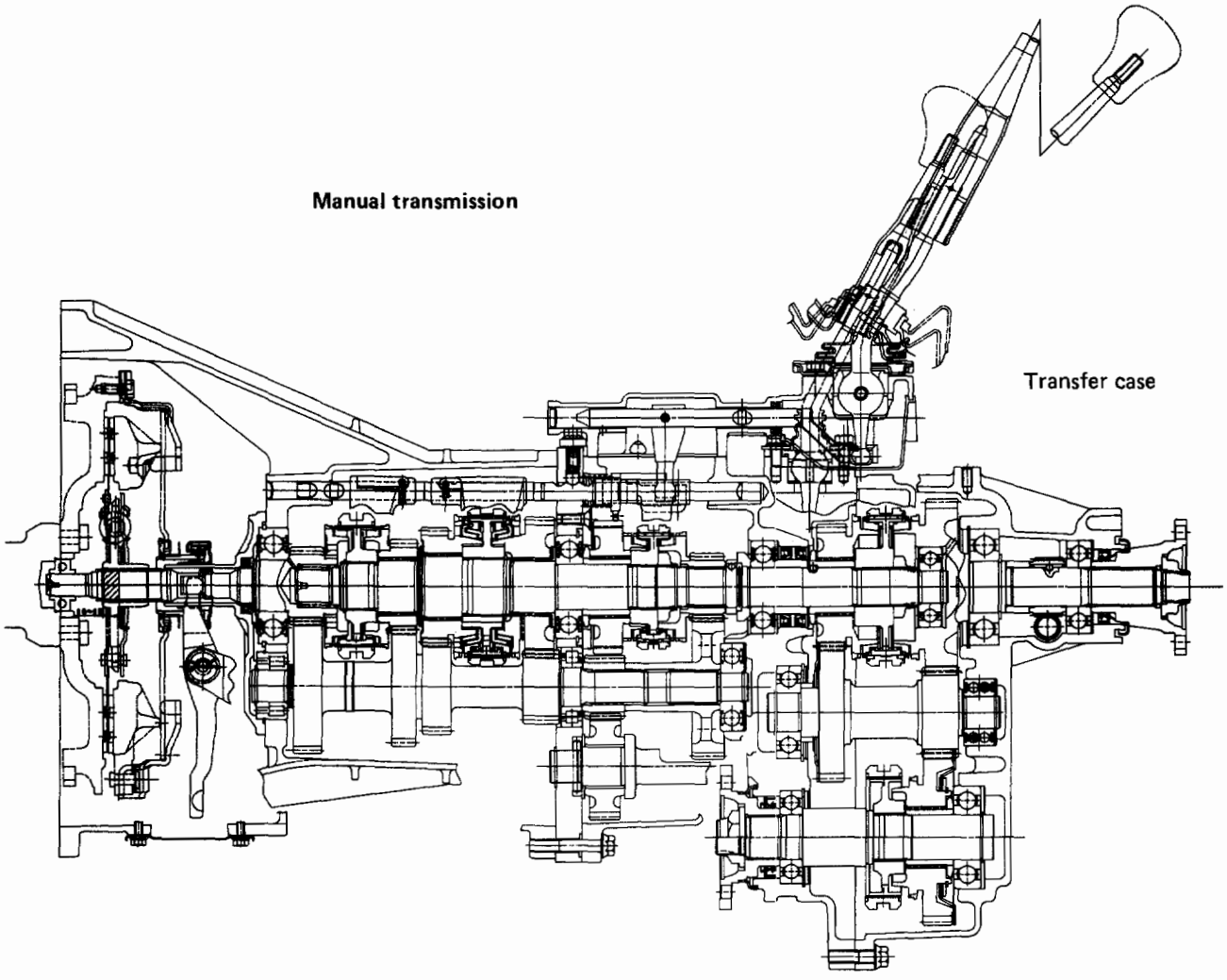

Fig. 7B-1

DIAGNOSIS

Problem	Possible cause	Correction
Abnormal noise	• Flywheel pilot bearing worn	Replace
	• Bearings worn or broken (Mainshaft, counter shaft, and transfer shaft)	Replace
	• Gear tooth contact surfaces worn or scuffed (Mainshaft, counter shaft, reverse idler gear and transfer gears)	Replace
	• Splines worn (Mainshaft, synchronizer clutch hub)	Replace
	• Gear or bearing thrust face seized	Replace
	• Lack of backlash between meshing gears	Replace
Hard Shifting	• Improper clutch pedal free play	Readjust
	• Change lever sliding portions worn	Repair or replace Regrease
	• Shift block, shift rod and/or control box sliding faces worn	Replace
	• Shift arm and synchronizer sleeve groove worn	Replace worn parts
	• Thrust washer, collar, and/or gear thrust faces worn (Mainshaft and counter shaft thrust play)	Replace worn parts
	• Synchronizer parts worn	Replace
Walking or Jumping out of gear	• Detent ball worn	Replace
	• Detent spring weakened or broken	Replace
	• Shift rod and/or control box sliding faces worn	Replace
	• Shift arm and synchronizer sleeve groove worn	Replace worn parts
	• Thrust washer, collar, and/or gear thrust faces worn (Mainshaft and counter shaft thrust play)	Replace worn parts
	• Bearings worn or broken	Replace
	• Splines worn (Mainshaft, synchronizer hub)	Replace
	• Synchronizer spring weakened or broken	Replace
Oil leakage	• Loose drain plug(s) and/or filler plug(s)	Tighten Replenish oil
	• Defective or improperly installed gasket(s)	Replace
	• Oil seal worn or scratched	Replace

ON-VEHICLE SERVICE

TRANSMISSION

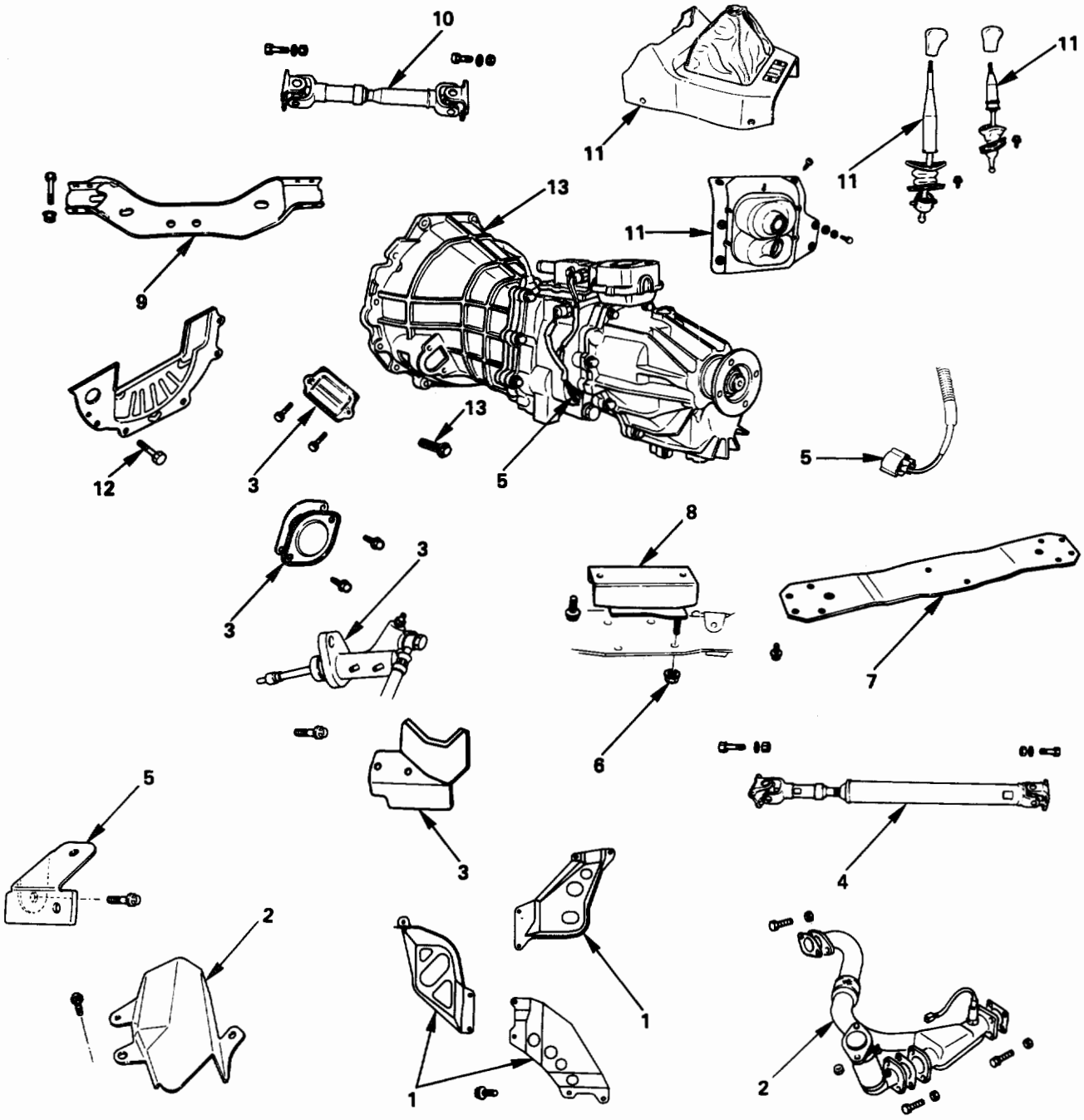

Removal steps

1. Exhaust and transfer protectors
2. Exhaust pipe and heat protector
3. Slave cylinder, heat protector, dust cover (1) and (2)
4. Rear propeller shaft
5. Transmission harness connectors
6. Engine rear mount nuts
7. 3rd crossmember
8. Engine rear mount
9. Front crossmember
10. Front propeller shaft
11. Gear control lever
12. Flywheel under cover bolts
13. Transmission assembly

Installation steps

To install, follow the removal steps in the reverse order.

Fig. 7B-2

REMOVAL

Preparation:

- Remove engine hood.
- Disconnect battery negative(–) cable.

1. **Exhaust and transfer protectors**
   - Remove three exhaust and transfer protectors.
2. **Exhaust pipe and heat protector**
   - Disconnect oxygen sensor connector from the transmission harness (Fig. 7B-3).
   - Remove the center and left front exhaust pipe.
   - Remove the harness heat protector.

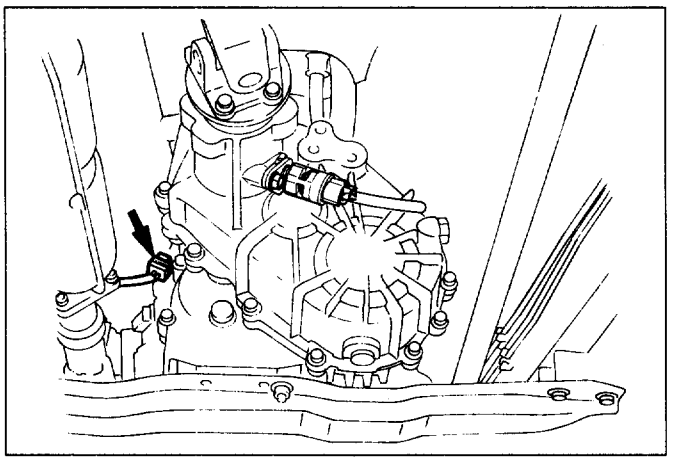

Fig. 7B-3

3. **Slave cylinder, heat protector, dust cover (1) and (2) (Fig. 7B-4)**
   - Remove the heat protector.
   - Remove the slave cylinder.
   - Remove the dust cover (1) and (2).
4. **Rear propeller shaft**
   - Remove the rear propeller shaft (Fig. 7B-5).

NOTE:
Apply alignment marks on the flange at the both front and rear side.

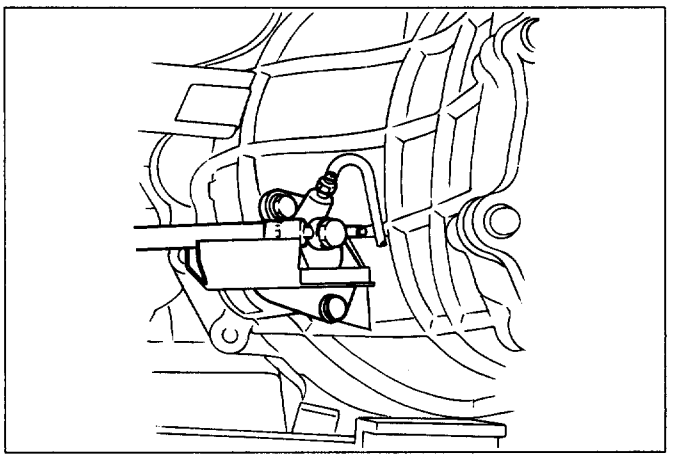

Fig. 7B-4

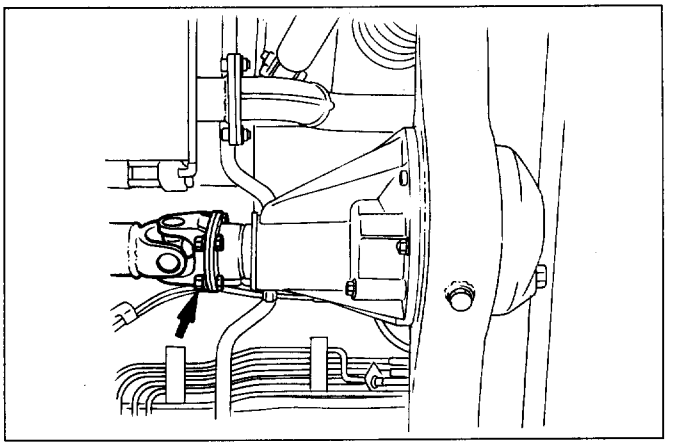

Fig. 7B-5

5. **Transmission harness connectors**
   - Disconnect the reverse lamp switch, 4WD indicator switch, 1-2 and 3-4 indicator switch harness connectors.
   - Disconnect the speed sensor harness connector (Fig. 7B-6).
   - Remove two transmission harness clamps from the transmission case and bracket (Fig. 7B-7).

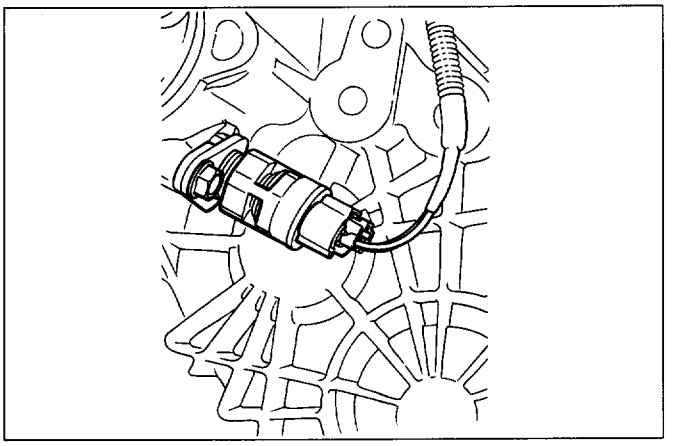

Fig. 7B-6

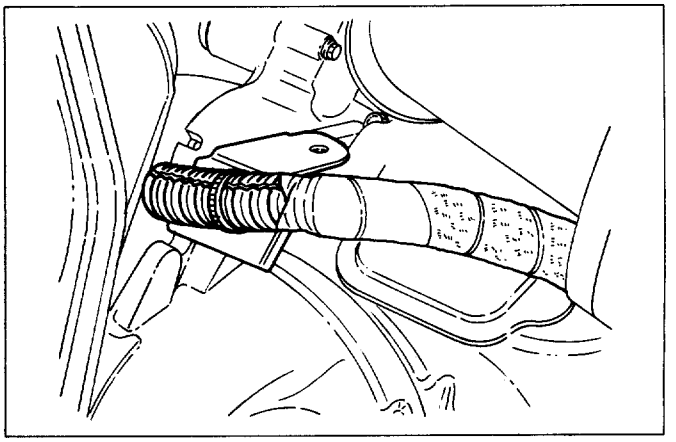

Fig. 7B-7

6. **Engine rear mount nuts**
   - Support the transfer case with a jack.
   - Remove two engine rear mount nuts (Fig. 7B-8).
7. **Third crossmember**
   - Remove eight third crossmember bolts.
8. **Engine rear mount**
   - Remove two engine rear mount bolts.
   - Remove the rear mount from the transmission.
9. **Front crossmember**
   - Remove four front crossmember bolts.
   - Remove the front crossmember from the frame.
10. **Front propeller shaft**
    - Remove the front propeller shaft (Fig. 7B-9).

NOTE:
Apply alignment marks on the flange at both the front and rear sides.

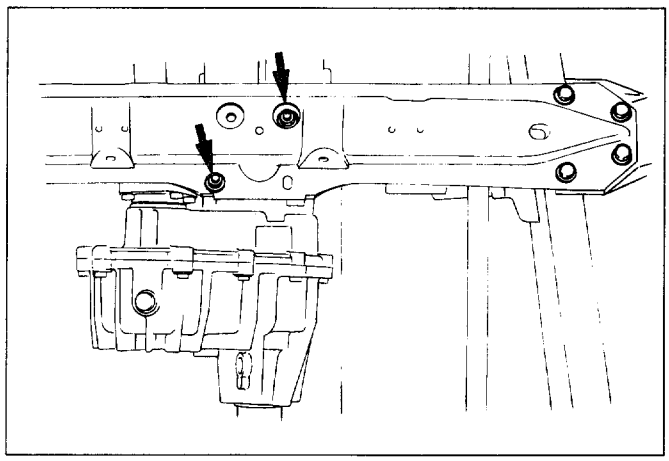

Fig. 7B-8

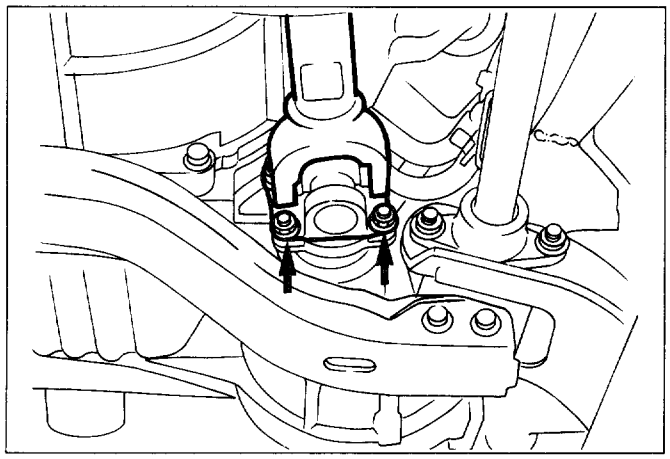

Fig. 7B-9

11. **Gear control lever (Fig. 7B-10)**
    - Remove the gear control lever knob.
    - Remove the front console assembly.
    - Remove the grommet assembly.
    - Remove the transmission control lever and transfer control lever.
    - Support the transmission with a transmission jack and then remove jack from the transfer case side (Fig. 7B-11).
12. **Flywheel under cover bolts**
    - Remove three flywheel under cover bolts.

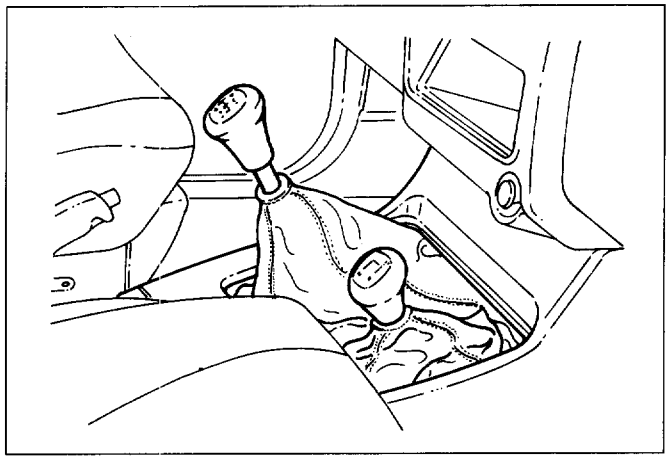

Fig. 7B-10

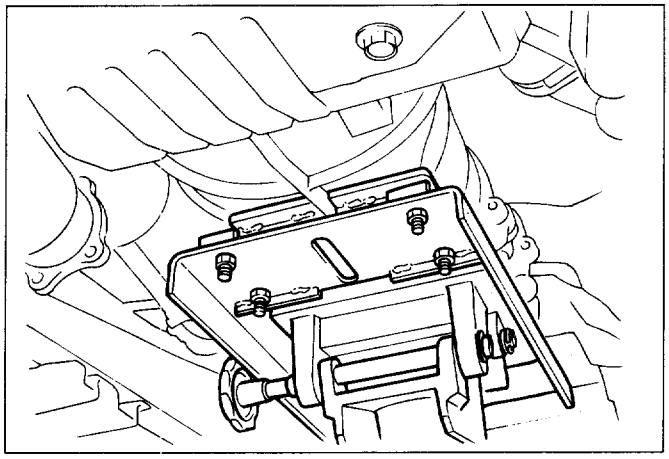

Fig. 7B-11

13. **Transmission assembly**
    - Use the remover for disconnect the clutch release bearing from the clutch pressure plate (Fig. 7B-12).
      Clutch release bearing remover: J-39207

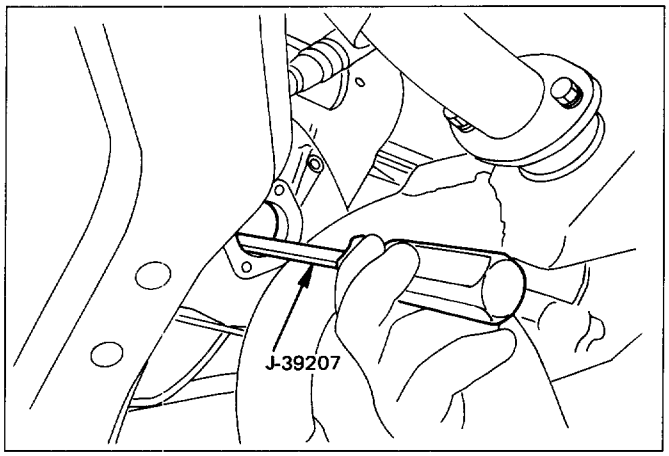

Fig. 7B-12

Release bearing disconnection
(Fig. 7B-12a & 7B-12b)

① Pull the shift fork toward the transmission to press the clutch release bearing against the clutch.
② Insert the clutch release bearing remover between the wedge collar and the release bearing.
③ Turn the remover to separate the release bearing.

NOTE:
Be sure not to insert the remover between the wedge collar and the clutch.

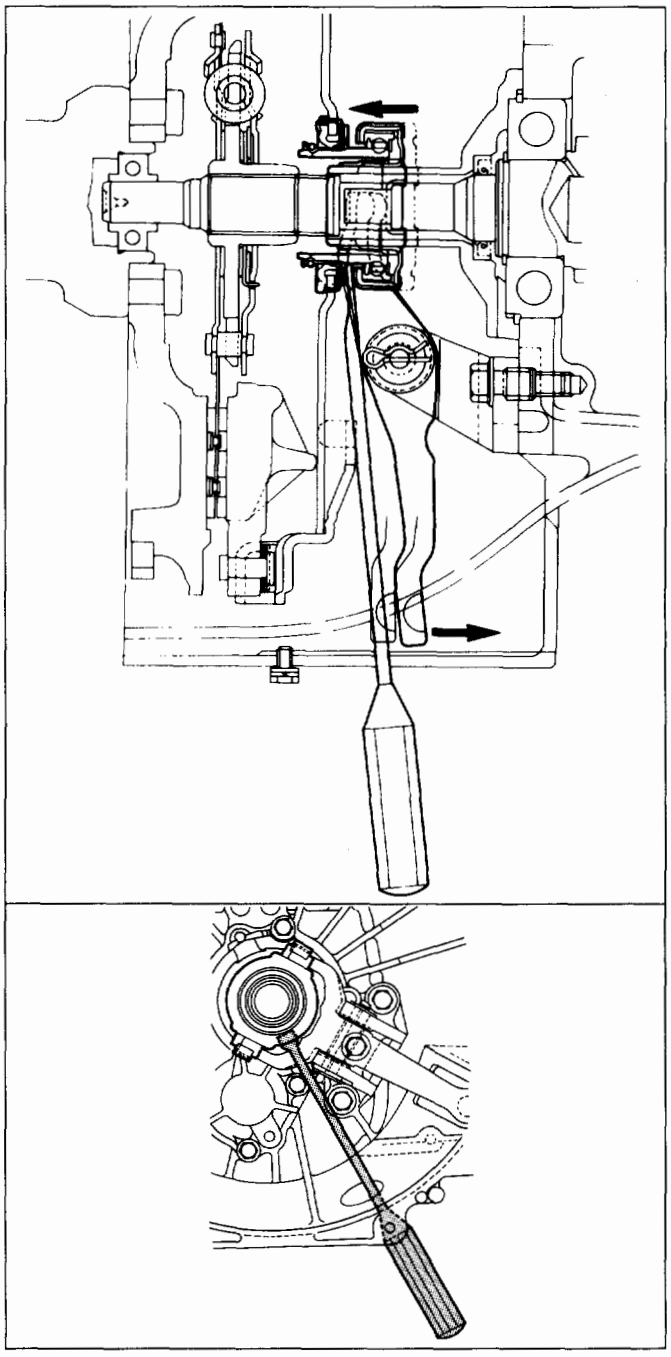

Fig. 7B-12a

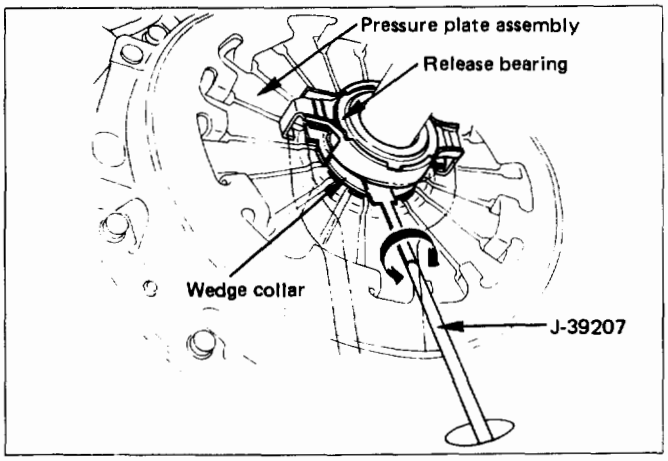

Fig. 7B-12b

- Remove the transmission retaining nuts and bolts.
- Remove the transmission from the vehicle.

INSTALLATION

To install, follow the removal steps in the reverse order, noting the following points:

13. Transmission assembly

- Apply a thin coat of molybdenum disulfide grease to the top gear shaft spline.
- Slowly operate the transmission jack until the front of transmission is aligned with the rear of the engine.
  The slope of the engine and the transmission must be the same.
- Align the top gear shaft spline with the clutch driven plate spline (Fig. 7B-13).
- Install the transmission to the engine.
  Tighten the transmission nuts and bolts (Fig. 7B-14).

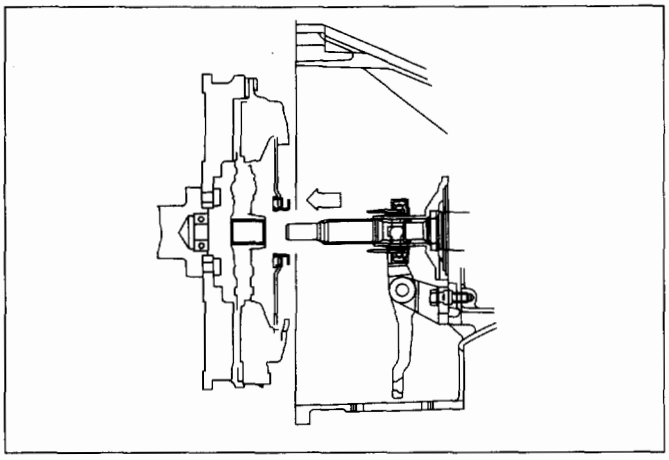

Fig. 7B-13

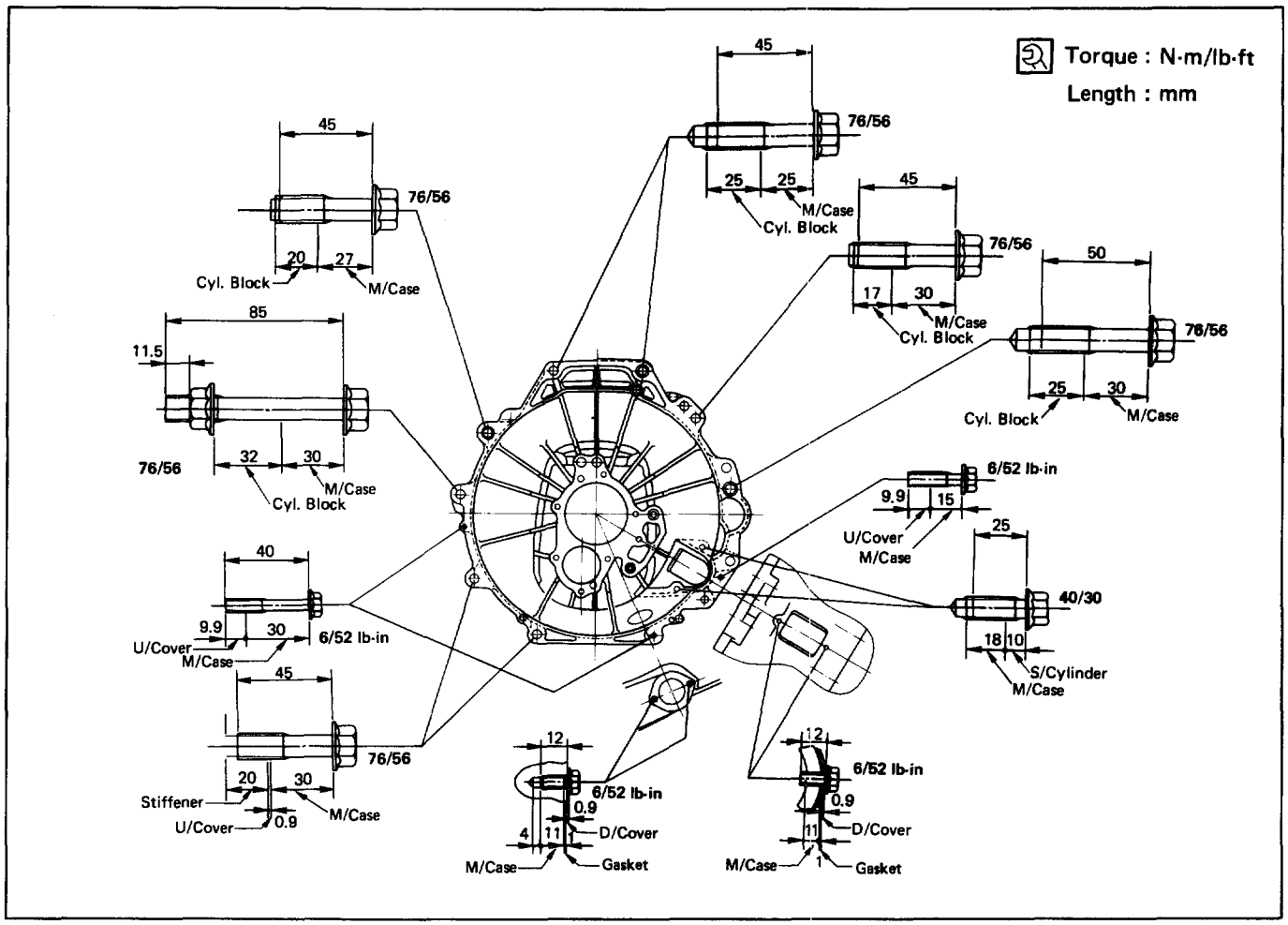

Fig. 7B-14

- Apply a force of 59-78N (13.2 - 17.6lb) to the tip of the shift fork in the direction of the transmission to engage the clutch pressure plate and release bearing (Fig. 7B-15).

NOTE:
A click sound is heard when the release bearing and the tip of the diaphragm spring engage each other.
Check to see if they are securely engaged by pushing the tip of the shift fork toward the engine while applying a force of about 25N (5.5 lb). If the shift fork will not move, then they are securely engaged.

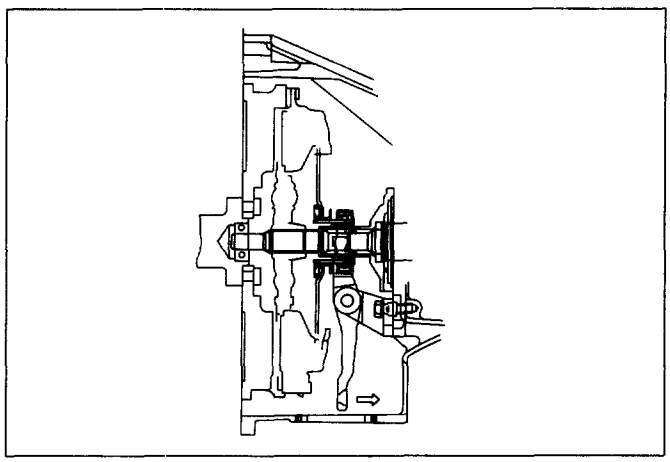

Fig. 7B-15

12. Flywheel under cover bolts
- Install three flywheel under cover bolts.

11. Gear control lever
- Install the transmission control lever and transfer control lever.
- Install the grommet assembly.
- Install the front console assembly.
- Install the gear control lever knob.
- Support the transfer case with a jack and then remove the transmission jack from transmission side.

10. Front propeller shaft
- Install the front propeller shaft.

Torque	N·m (lb·ft)	63 (46)

9. Front crossmember
- Install the front crossmember.

Torque	N·m (lb·ft)	78 (58)

8. Engine rear mount
- Install the engine rear mount.

Torque	N·m (lb·ft)	41 (30)

7. 3rd crossmember
- Install the 3rd crossmember.

Torque	N·m (lb·ft)	50 (37)

6. Engine rear mount nuts

Torque	N·m (lb·ft)	50 (37)

- Remove the transmission jack.

5. Transmission harness connectors
- Install bracket and two transmission harness clamps to the transmission case (Fig. 7B-15a).
- Connect the speed sensor harness connector.
- Connect the reverse lamp switch, 4WD indicator switch, 1-2 and 3-4 indicator switch harness connectors.

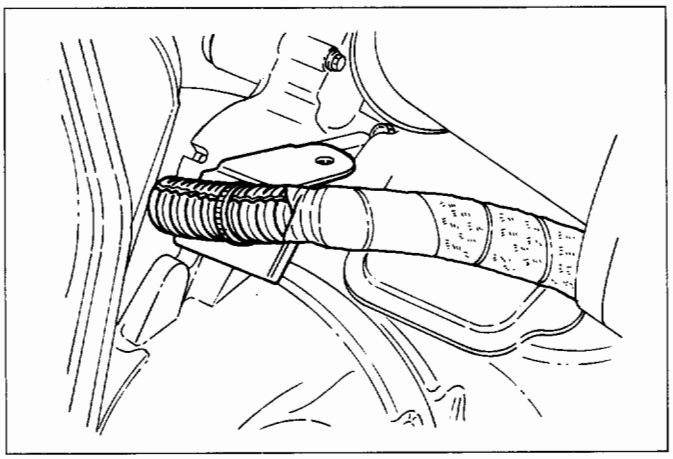

Fig. 7B-15a

4. Rear propeller shaft
- Install the rear propeller shaft.

Torque	N·m (lb·ft)	63 (46)

3. Slave cylinder, heat protector, dust cover (1) and (2) (Fig. 7B-16)
- Apply the grease to top hole portion of the shift fork.
- Install the slave cylinder.

Torque	N·m (lb·ft)	43 (32)

- Install the clutch dust cover (1) and (2) to the clutch housing.

Torque	N·m (lb·in)	6 (52)

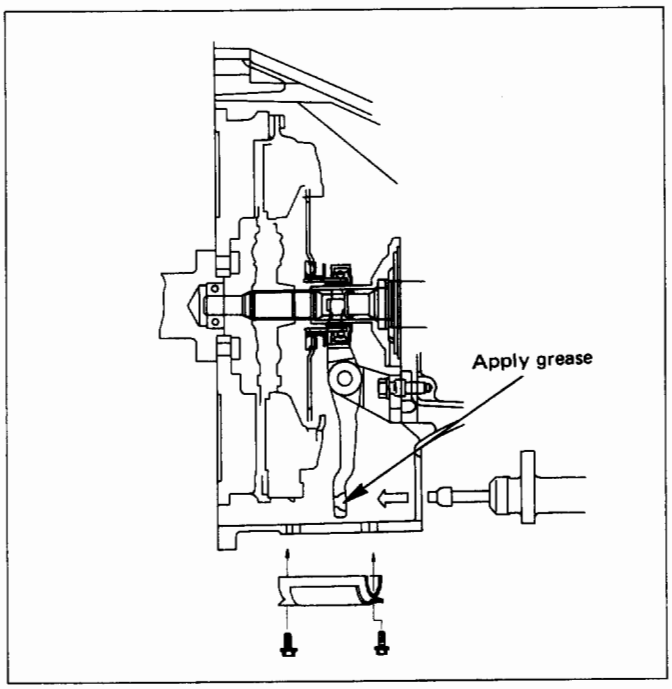

Fig. 7B-16

- Install the slave cylinder heat protector to the slave cylinder.

2. Exhaust pipe and heat protector
- Install the harness heat protector.
- Install the center and left front exhaust pipes.

Torque	N·m (lb·ft)
Exh.pipe-exh.manifold	67 (49)
Center pipe flange bolt	43 (32)

- Connect oxygen sensor connector to the transmission harness.

1. Exhaust and transfer protectors

Torque	N·m (lb·ft)	37 (27)

- Connect battery negative (–) cable.
- Install engine hood.

GEAR CONTROL BOX ASSEMBLY

REMOVAL

Preparation:

- Disconnect battery negative (—) cable.

1. **Knob**
   - Remove knobs of the transmission control lever and transfer control lever.
2. **Front console assembly**
   - Remove front console assembly.
   - Disconnect harness connector.
   - Remove rear heater duct.
3. **Grommet assembly**
   - Remove grommet assembly.
4. **Transmission control lever and transfer control lever**
   - Remove transmission control lever and transfer control lever.
5. **Gear control box assembly (Fig. 7B-16a)**
   - Disconnect neutral switch harness connector.
   - Remove neutral switch.
   - Remove four gear control box bolts and harness clips.
   - Remove gear control box assembly and gasket from the transmission case.

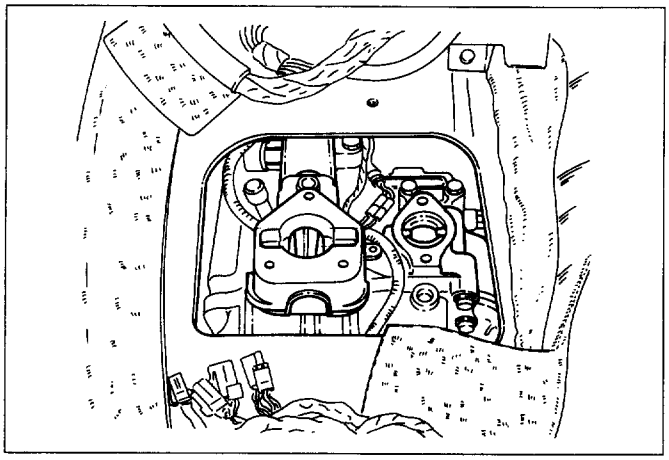

Fig. 7B-16a

INSTALLATION

To install, follow the removal steps in the reverse order, noting the following points:

5. **Gear control box assembly**
   - Install a new gasket.
   - Install four harness clips and then tighten four new control box bolts to the specified torque (Fig. 7B-16b).

Torque N·m (lb·ft)	20 (14)

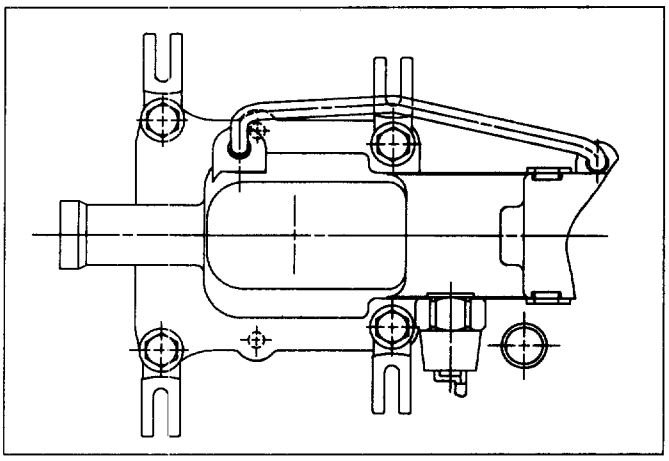

Fig. 7B-16b

   - Install neutral switch and connect harness connector.
4. **Transmission control lever and transfer control lever**
   - Install transmission control lever and transfer control lever.
3. **Grommet assembly**
   - Install grommet assembly.
2. **Front console assembly**
   - Install rear heater duct.
   - Connect harness connector.
   - Install front console assembly.
1. **Knob**
   - Install knobs of the transmission control lever and transfer control lever.
   - Connect battery negative (—) cable.

MEMO

UNIT REPAIR

TRANSMISSION CASE AND TRANSFER CASE

MAJOR COMPONENT

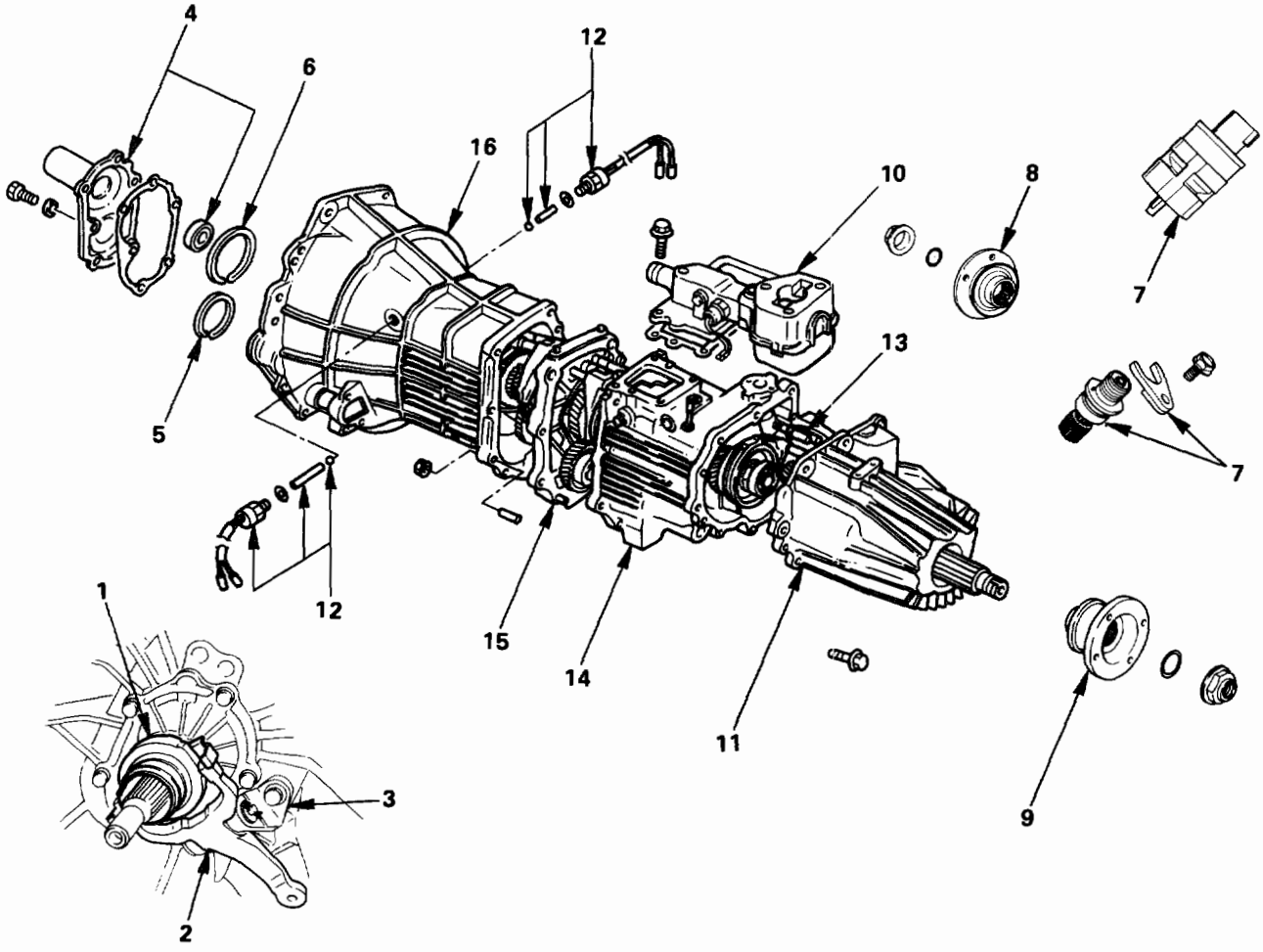

Disassembly steps

1. Clutch release bearing
2. Shift fork
3. Fulcrum bridge
4. Front cover (with oil seal)
5. Snap ring ; counter front bearing
6. Snap ring ; top gear bearing
7. Speedometer sensor and speedometer driven gear
8. Front companion flange
9. Rear companion flange
10. Gear control box assembly
11. Transfer rear case assembly
12. 1-2 and 3-4 indicator switch, pin, and ball
13. Detent, shift arm, and interlock pin (Transfer case assembly)
14. Transfer case assembly
15. Intermediate plate with gear assembly
16. Transmission case

Reassembly steps

To reassemble, follow the disassembly steps in the reverse order.

Fig. 7B-17

DISASSEMBLY

Preparation:

- Clean the exterior of the unit with solvent.
- Remove the drain plug from the transmission case and transfer case and drain the lubricant.

1. **Clutch release bearing**
   - Remove the clutch release bearing from the transmission case (Fig. 7B-18).

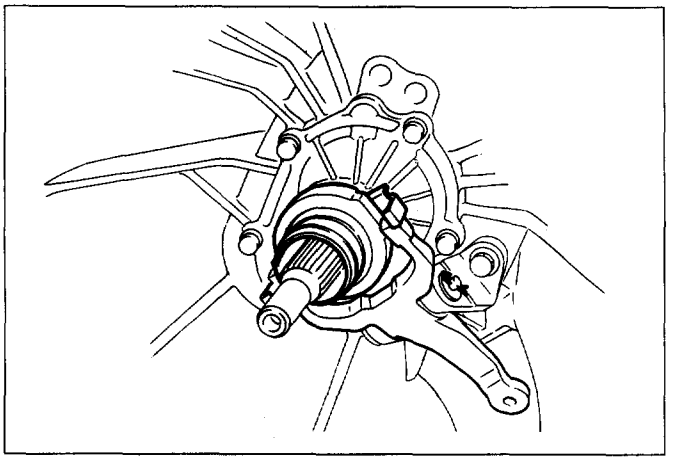

Fig. 7B-18

2. **Shift fork**
   - Remove the snap pin.
   - Remove the shift fork pin and shift fork from the fulcrum bridge (Fig. 7B-19).

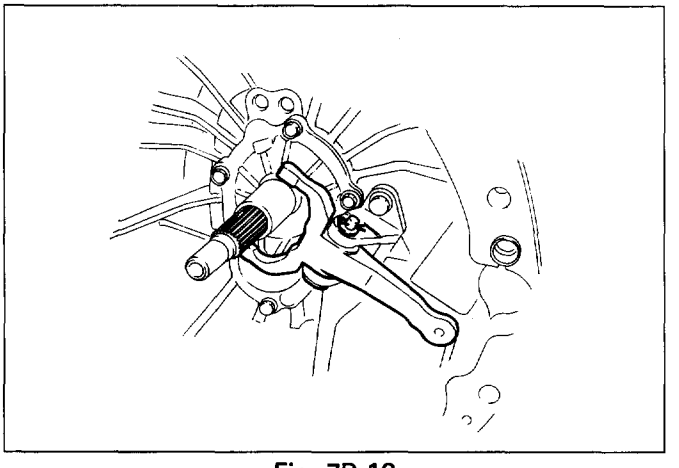

Fig. 7B-19

3. **Fulcrum bridge**
   - Remove the fulcrum bridge bolts.
   - Remove the fulcrum bridge from the transmission case (Fig. 7B-20).
4. **Front cover (with oil seal)**
   - Remove the front cover and gasket from the transmission case (Fig. 7B-20).

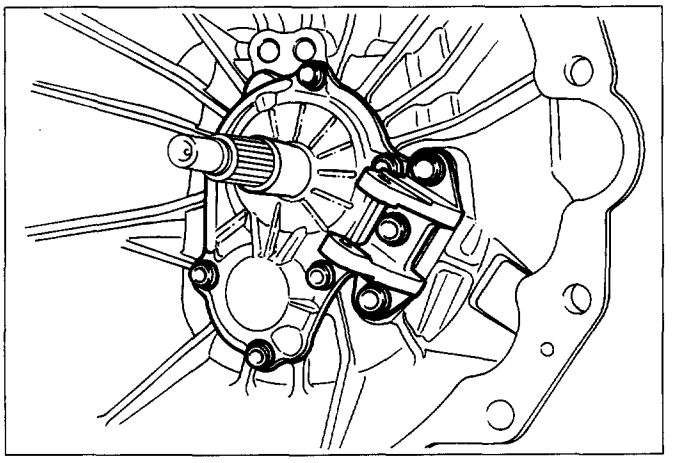

Fig. 7B-20

5. **Snap ring; counter front bearing**
6. **Snap ring; top gear bearing**
   - Use a pair of snap ring pliers to remove the snap ring (Fig. 7B-21).

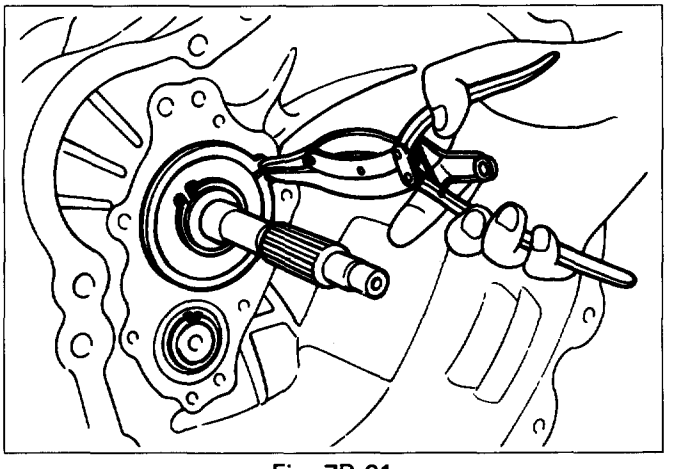

Fig. 7B-21

7. **Speedometer sensor and speedometer driven gear.**
   - Remove the speedometer sensor.
   - Remove the plate.
   - Remove the driven gear bushing and driven gear.

NOTE:
Apply a reference mark to the driven gear bushing before removal.

8. **Front companion flange**
9. **Rear companion flange**
   - Use the flange holder to remove the end nut (Fig. 7B-22).

     Flange holder: J-37221
   - Remove the front and rear companion flange.
10. **Gear control box assembly**

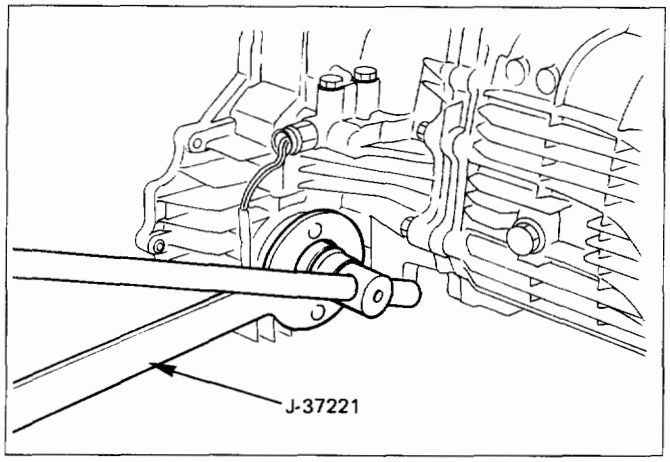

Fig. 7B-22

11. Transfer rear case assembly
- Remove the transfer rear case assembly from the transfer case.
- Refer to "SECTION 7D TRANSFER CASE" for repair of transfer rear case assembly.

12. 1-2 and 3-4 indicator switch, pin and ball

13. Detent, shift arm, and interlock pin (Transfer case assembly)
- Refer to "SECTION 7D TRANSFER CASE" for repair of detent, shift arm, and interlock pin (transfer case assembly).

14. Transfer case assembly
- Refer to "SECTION 7D TRANSFER CASE" for repair of transfer case assembly.
- Remove the transfer case together with intermediate plate with gear assembly from the transmission case.

15. Intermediate plate with gear assembly

16. Transmission case

REASSEMBLY

To reassemble, follow the disassembly steps in the reverse order, noting the following points:

16. Transmission case

15. Intermediate plate with gear assembly

14. Transfer case assembly
- Refer to "SECTION 7D TRANSFER CASE" for repair of transfer case assembly.
- Apply recommended liquid gasket (LOCTITE FMD 127) or its equivalent to the transmission case, intermediate plate and transfer case fitting surfaces.
- Install the transfer case together with intermediate plate with gear assembly to the transmission case.
- Pull out the top gear shaft until the ball bearing snap ring groove protrudes from the transmission case front cover fitting face. Avoid subjecting the mainshaft to sudden shock or stress.
- Tighten the seven transmission-transfer case bolts to the specified torque.

Torque N·m (lb·ft)	37 (27)

13. Detent, shift arm, and interlock pin (Transfer case assembly)
- Refer to "SECTION 7D TRANSFER CASE" for repair of detent, shift arm, and interlock pin (transfer case assembly).

12. 1-2 and 3-4 indicator switch, pin and ball

11. Transfer rear case assembly
- Apply recommended liquid gasket (LOCTITE FMD 127) or its equivalent to the transfer rear case fitting faces (Fig. 7B-23).
- Perform the following steps before fitting the transfer rear case.
  (1) Shift the High-Low shift to the 4H side.
  (2) Turn the select rod counterclockwise so that the select block projection Ⓐ may enter into the 2WD-4WD shift block (Fig. 7B-24).

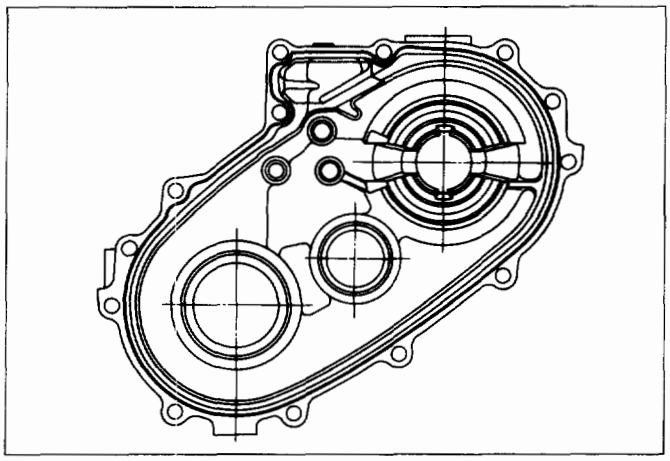

Fig. 7B-23

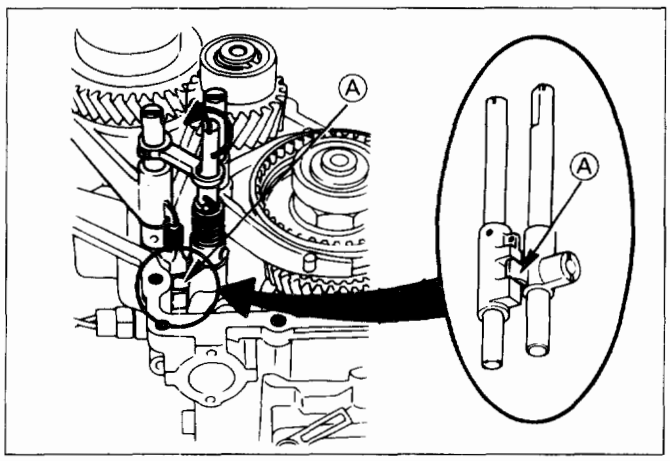

Fig. 7B-24

(3) The cut-away portion of select rod head Ⓑ should align with that of the rear case hole's stopper © (Fig. 7B-25).

- Tighten the eleven transfer rear case bolts to the specified torque.

Torque N·m (lb·ft)	37 (27)

NOTE:
Notes when tightening the bolt:
- After cleaning the bolt hole, dry it thoroughly with air.
- After cleaning the screw face of a removed bolt or new one, dry it thoroughly. Apply recommended liquid gasket (LOCTITE 242) or its equivalent before tightening it.

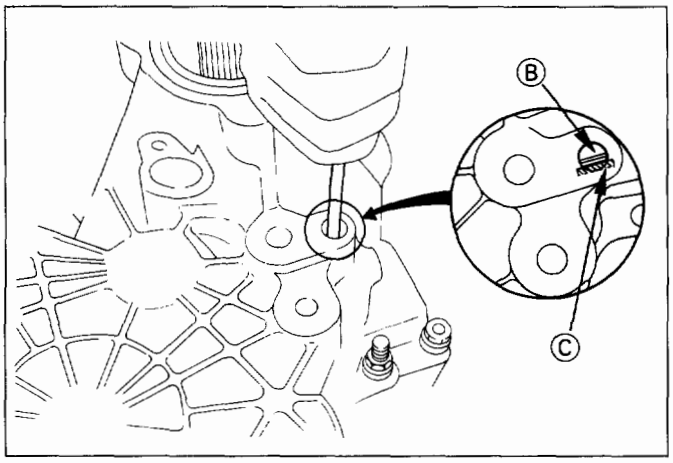

Fig. 7B-25

10. Gear control box assembly
- Install a new gasket.
- Install the harness clip and then tighten four new gear control box bolts to the specified torque (Fig. 7B-26).

Torque N·m (lb·ft)	20 (14)

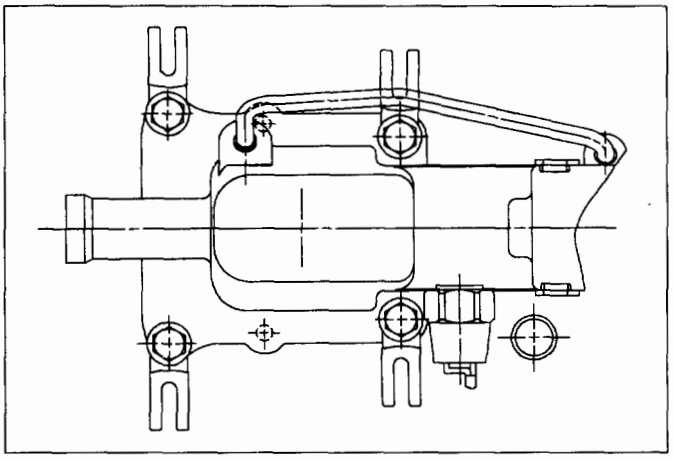

Fig. 7B-26

9. Rear companion flange
8. Front companion flange
- Install the rear and front companion flange.
- Install the O-ring.
- Use the flange holder to tighten the flange nuts to the transfer case (Fig. 7B-27).
  Flange holder : J-37221
- Tighten new transfer flange nuts to the specified torque.

Torque	N·m (lb·ft)
Rear companion flange	167 (123)
Front companion flange	137 (101)

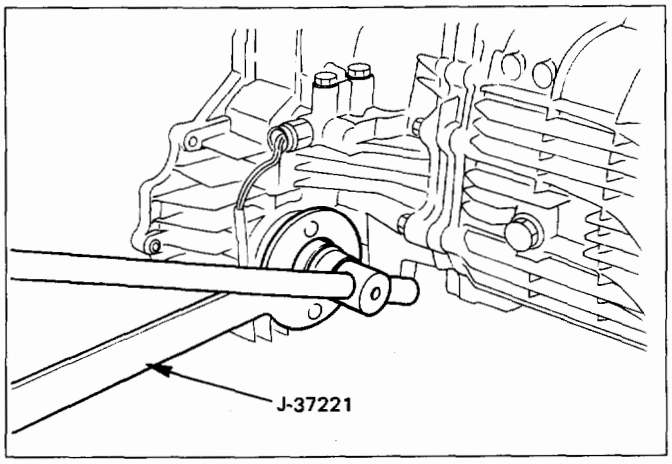

Fig. 7B-27

- Use the punch to stake the rear companion flange nut at two spots (Fig. 7B-28, 7B-29).
  Punch: J-39209
- Stake the front companion flange nut at one spot.

NOTE:
Be sure to confirm that there is no crack at the staked portion of the flange nut after staking.

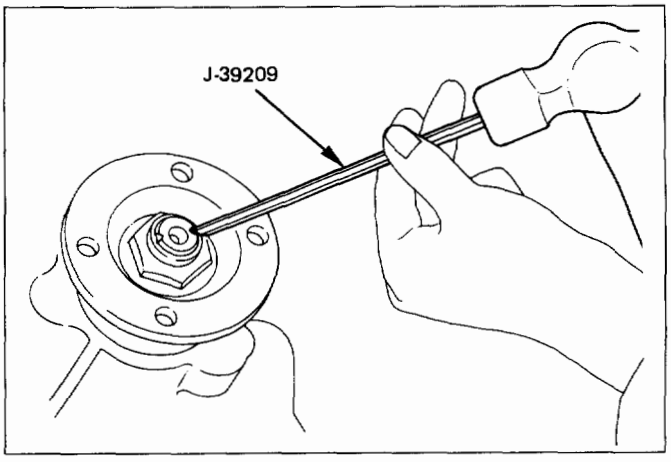

Fig. 7B-28

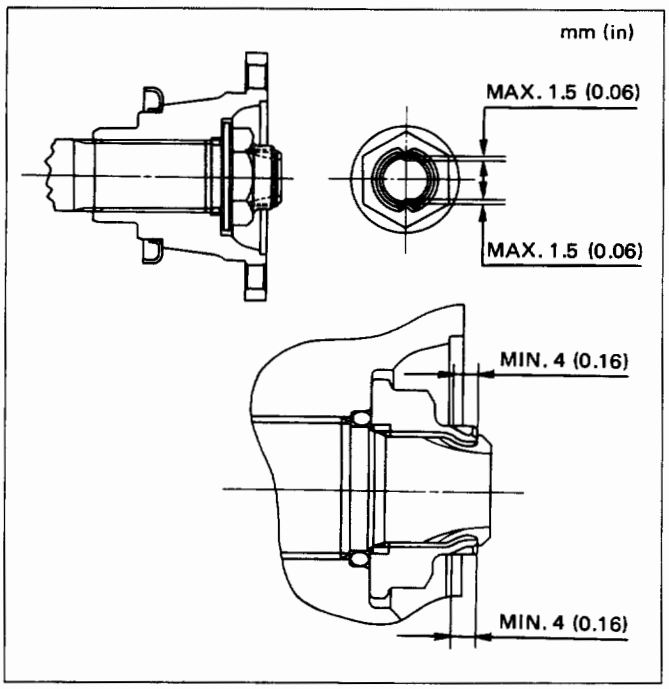

Fig. 7B-29

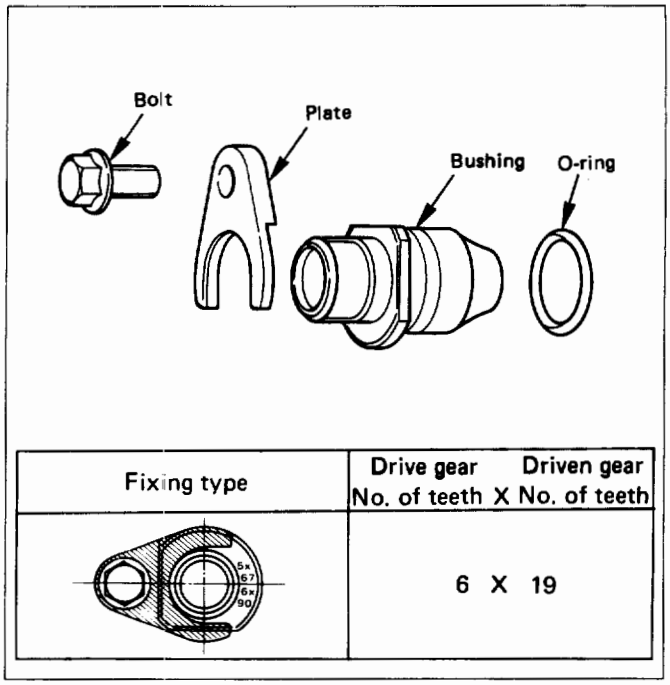

Fig. 7B-30

7. **Speedometer driven gear and Speedometer sensor**
   - Install the O-ring to the speedometer driven gear bushing.
   - Install the driven gear to the speedometer driven gear bushing.
   - Install the speedometer driven gear assembly to the transfer rear cover (Fig. 7B-30).
   - Install the plate to the transfer rear cover.

Torque N·m (lb·ft)	15 (11)

   - Install the speedometer sensor.

Torque N·m (lb·ft)	27 (20)

6. **Snap ring; top gear bearing**
5. **Snap ring; counter front bearing**
   - Use a pair of snap ring pliers to install the snap rings to the mainshaft.
   - The snap rings must be fully inserted into the bearing snap ring groove.
4. **Front cover (with oil seal)**

   Oil seal replacement
   - Remove the oil seal from the front cover.
   - Apply engine oil to the oil seal outer circumference.
   - Apply recommended grease to the oil seal lip.
   - Use the oil seal installer to install the rear seal to the front cover (Fig. 7B-31).

   Oil seal installer: J-29769
   - Install a new gasket and front cover to the transmission case.

NOTE:
Take care not to damage the oil seal.

Notes when tightening the bolt:
- After cleaning the bolt hole, dry it thoroughly with air.
- After cleaning the screw face of a removed bolt or new one, dry it thoroughly. Apply recommended liquid gasket (LOCTITE 242) or its equivalent before tightening it.

Tighten six new front cover bolts to the specified torque.

Torque N·m (lb·ft)	25 (18)

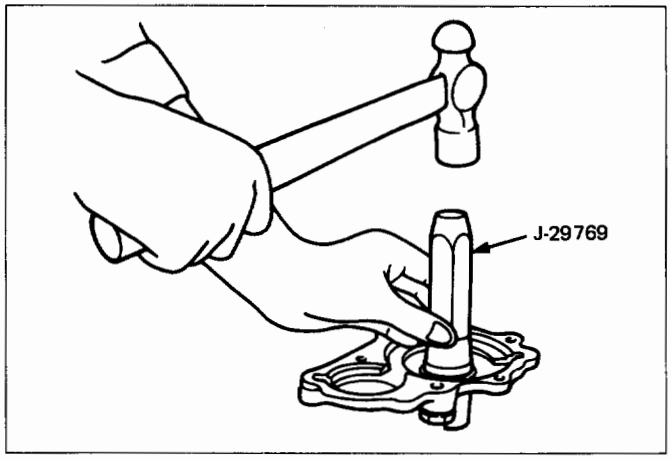

Fig. 7B-31

3. Fulcrum bridge

- Install the fulcrum bridge to the transmission case.
- Tighten three fulcrum bridge bolts to the specified torque (Fig. 7B-32).

Torque N·m (lb·ft)	38 (28)

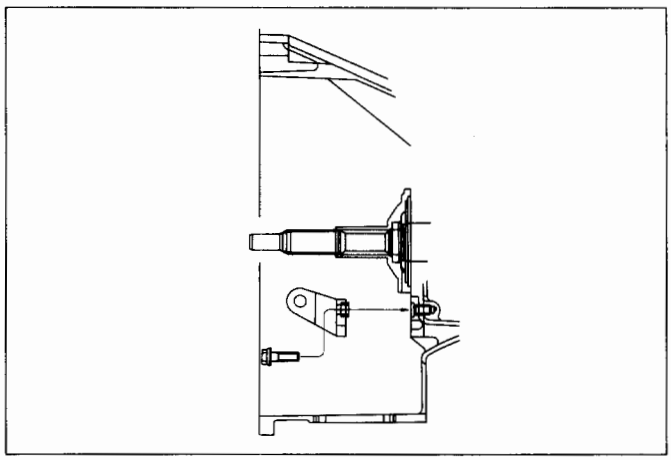

Fig. 7B-32

2. Shift fork (Fig. 7B-33)

- Apply grease to the pin hole inner circumferences and thrust surfaces.
- Attach the shift fork to the fulcrum bridge by inserting the shift fork pin from the bottom side of the fulcrum bridge.
- Install the washer and snap pin.

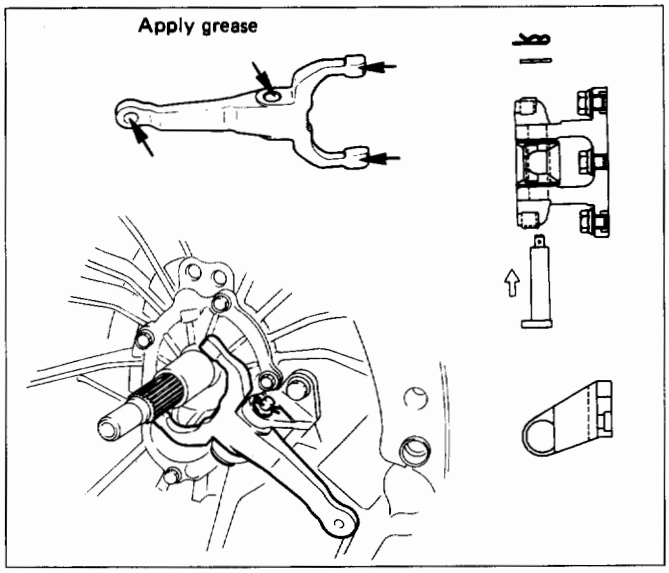

Fig. 7B-33

1. Release bearing

- Apply grease to the areas shown in Fig. 7B-34.
- Install the release bearing to the shift fork in the proper direction (Fig. 7B-35).

NOTE:
Ensure release bearing is properly positioned during installation, as shown in Fig. 7B-35.

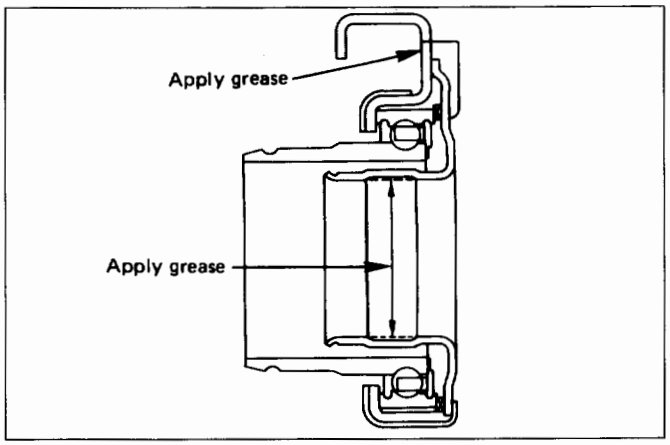

Fig. 7B-34

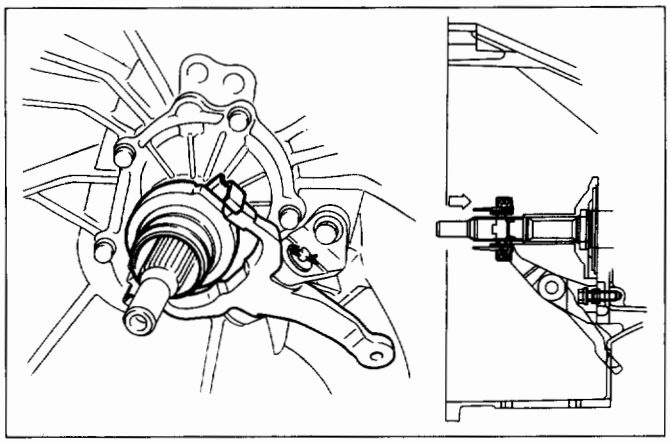

Fig. 7B-35

INTERMEDIATE PLATE WITH GEAR ASSEMBLY, DETENT, SHIFT ARM, AND INTERLOCK PIN

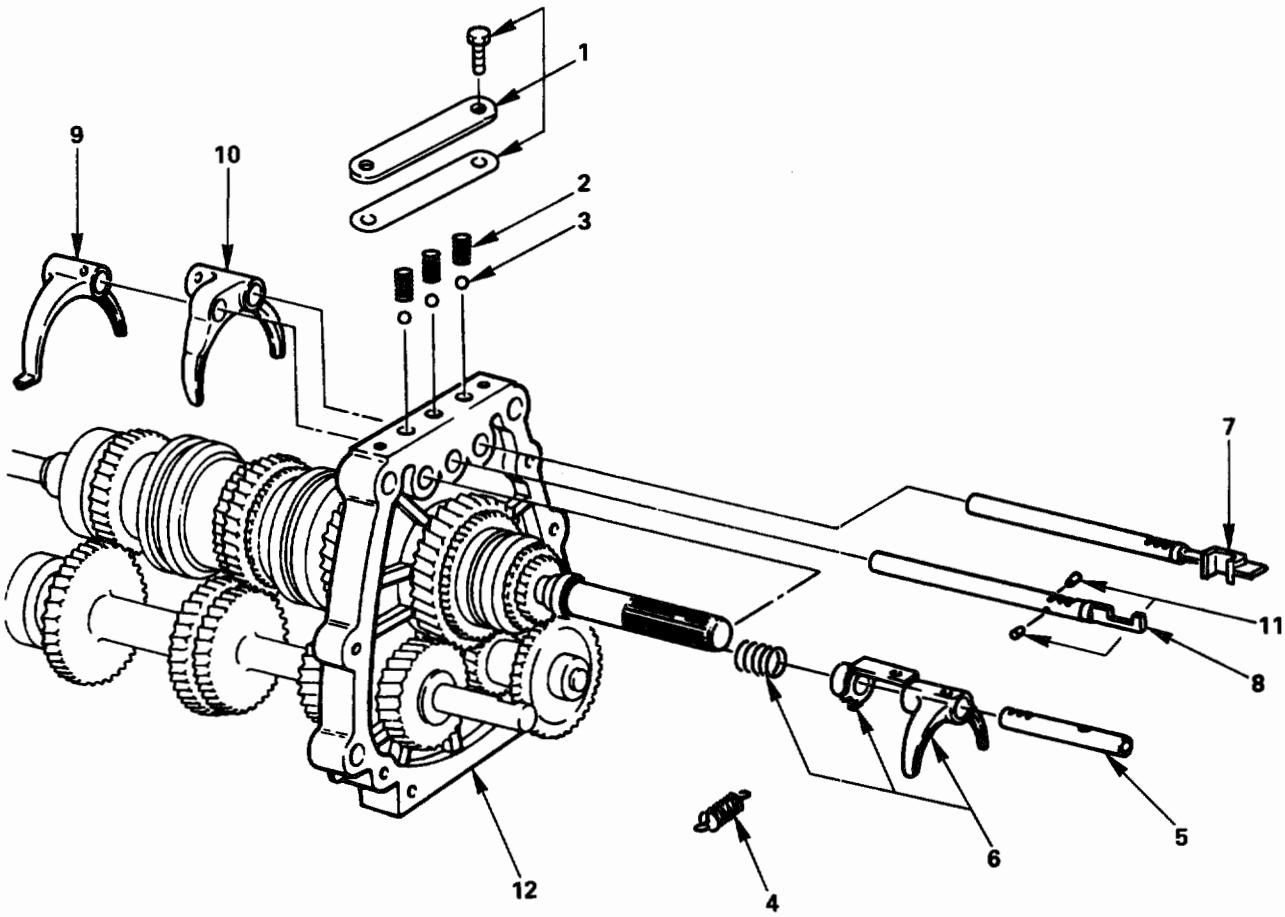

Disassembly steps

1. Detent spring plate and gasket
2. Detent spring
3. Detent ball
4. Spring
5. Rev-5th shift rod
6. Rev-5th shift arm and reverse inhibitor
7. 1st-2nd shift rod
8. 3rd-4th shift rod
9. 3rd-4th shift arm
10. 1st-2nd shift arm
11. Interlock pin
12. Intermediate plate and gear assembly

Reassembly steps

12. Intermediate plate and gear assembly
10. 1st-2nd shift arm
9. 3rd-4th shift arm
8. 3rd-4th shift rod
11. Interlock pin
7. 1st-2nd shift rod
6. Rev-5th shift arm and reverse inhibitor
5. Rev-5th shift rod
4. Spring
3. Detent ball
2. Detent spring
1. Detent spring plate and gasket

Fig. 7B-36

DISASSEMBLY

1. **Detent spring plate and gasket**
2. **Detent spring**
3. **Detent ball**
   - Use a magnetic hand to remove the detent balls from the intermediate plate (Fig. 7B-37).

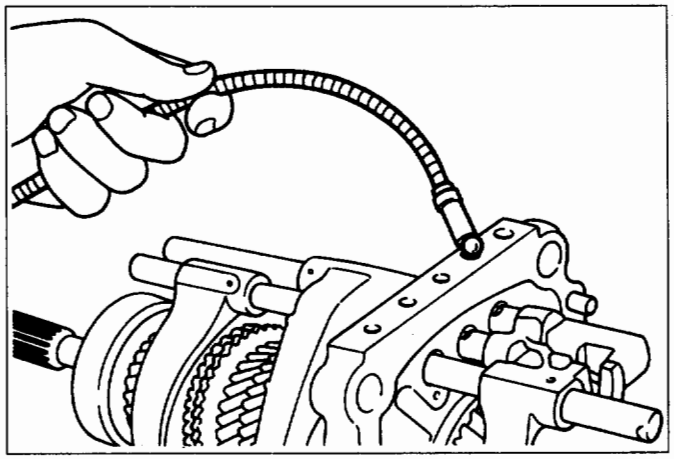

Fig. 7B-37

4. **Spring**
5. **Rev-5th shift rod**
6. **Rev-5th shift arm and reverse inhibitor**
7. **1st-2nd shift rod**
8. **3rd-4th shift rod**
9. **3rd-4th shift arm**
10. **1st-2nd shift arm**
    - Hold a round bar against the shift arm end (Fig. 7B-38).
    - Use a spring pin remover to remove the shift arm spring pin from the shift arm and the shift rod (Fig. 7B-39).
    - Move the 3rd-4th shift rod forward (Fig. 7B-40). Take care not to lose the interlock pins.

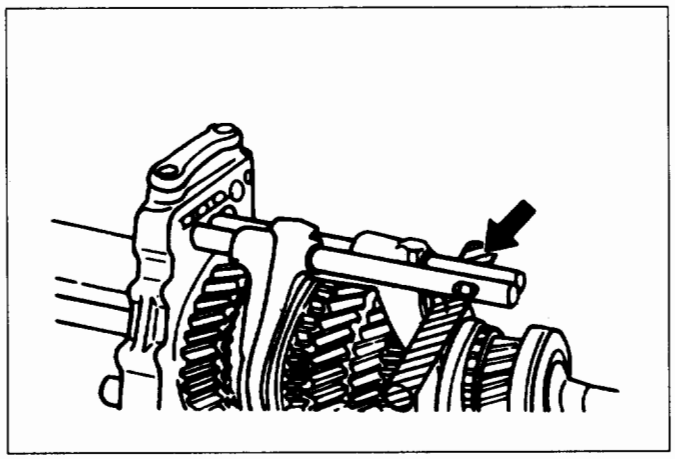

Fig. 7B-38

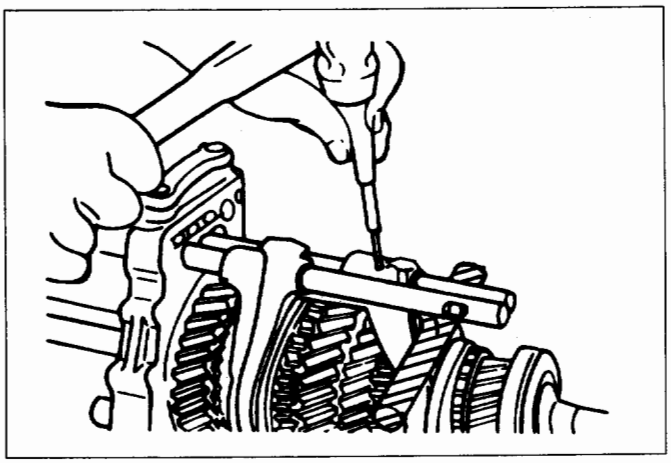

Fig. 7B-39

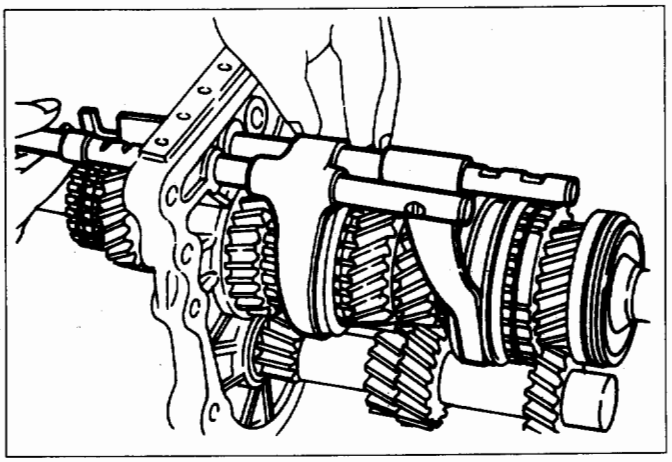

Fig. 7B-40

11. **Interlock pin**
    - Carefully remove the reverse shifter rod forward to avoid losing the interlock pins.

NOTE:
Remove the shifter rods carefully. Interlock pins are located between the shifter rod in the intermediate plate.

12. **Intermediate plate and gear assembly**

INSPECTION AND REPAIR

Make the necessary adjustments, and part replacements if excessive wear or damage is discovered during inspection.

SHIFT ARM THICKNESS

- Use a micrometer to measure the shift arm thickness (Fig. 7B-41).
  If the measured value is less than the specified limit, the shift arm must be replaced.

Shift arm thickness mm (in)

	Standard	Limit
1st-2nd	9.60-9.85 (0.378-0.388)	9.0 (0.354)
3rd-4th Rev.5th	9.60-9.80 (0.378-0.386)	

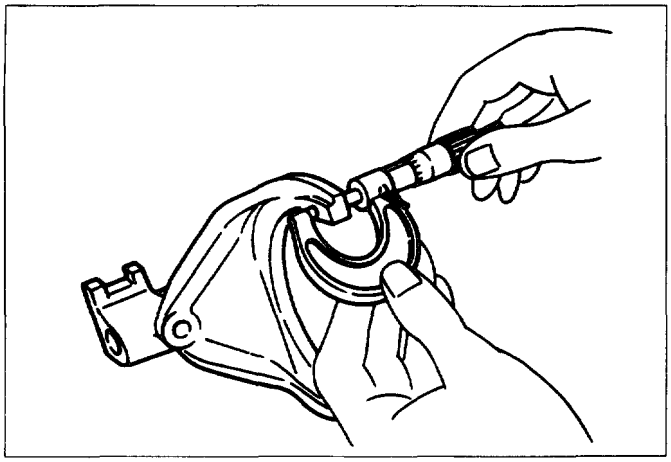

Fig. 7B-41

DETENT SPRING FREE LENGTH

- Use a vernier caliper to measure the detent spring free length (Fig. 7B-42).
  If the measured value is less than the specified limit, the detent spring must be replaced.

Detent spring free length mm (in)

Standard	Limit
26.8 (1.06)	26.2 (1.03)

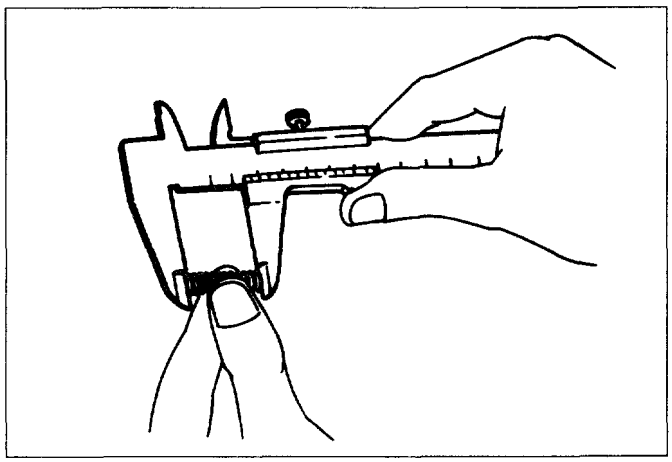

Fig. 7B-42

DETENT SPRING TENSION

- Use a spring tester to measure the valve spring tension (Fig. 7B-43).
  If the measured value is less than the specified limit, the valve spring must be replaced.

Valve spring tension N (lb)

Compressed height	Standard
20 mm (0.787 in)	87.2-97.1 (19.6 - 21.8)

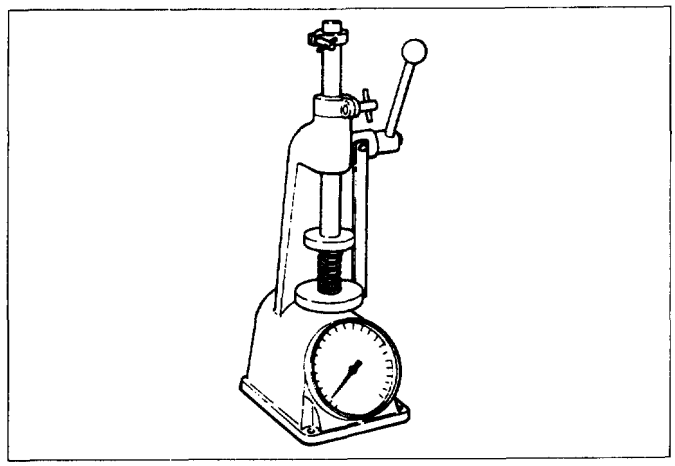

Fig. 7B-43

REASSEMBLY

12. Intermediate plate and gear assembly

10. 1st-2nd shift arm

9. 3rd-4th shift arm

- Hold a round bar against the shift rod end lower face to protect it against damage.
- Install a new spring pin.
  Discard the used spring pin.

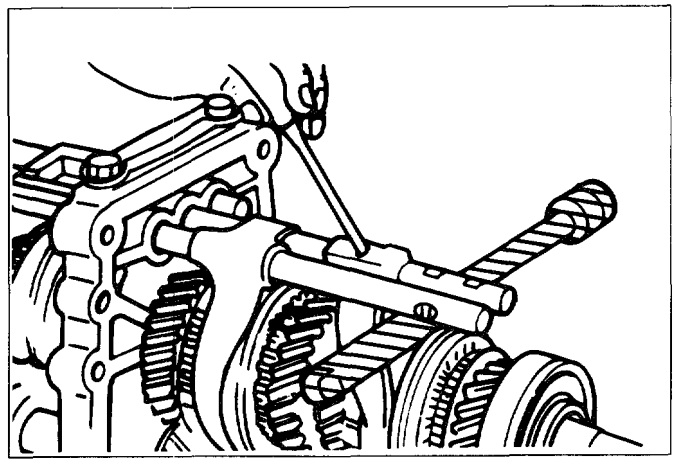

Fig. 7B-44

8. 3rd-4th shift rod

11. Interlock pin

- Install the interlock pin to the shift rod.
- Install the shift rod together with the interlock pin to the intermediate plate.
  Do not allow the interlock pin to fall from the shift rod.

7. 1st-2nd shift rod

6. Rev-5th shift arm and reverse inhibitor

- Apply oil to the reverse inhibitor inner surface.

5. Rev-5th shift rod

4. Spring

3. Detent ball

- Apply grease to the detent balls.

2. Detent spring

1. Detent spring plate and gasket

- Install a new detent spring plate and gasket.
- Install a new detent spring plate and gasket onto the transfer case into the correct direction (Fig. 7B-45).
- Tighten the detent spring plate bolts to the specified torque.

Torque N·m (lb·ft)	20 (14)

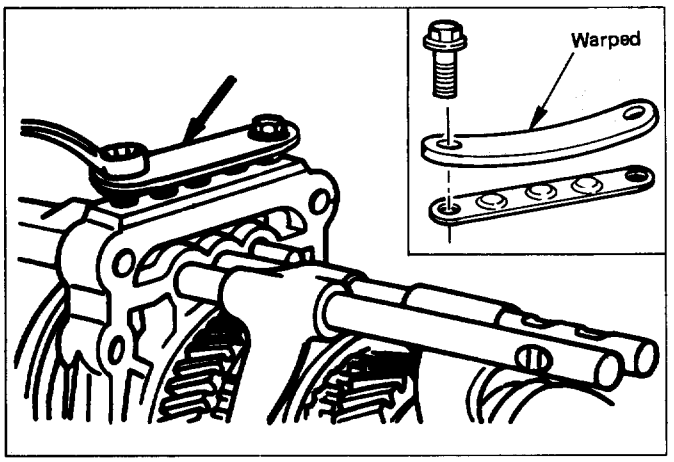

Fig. 7B-45

REVERSE GEAR AND 5TH GEAR

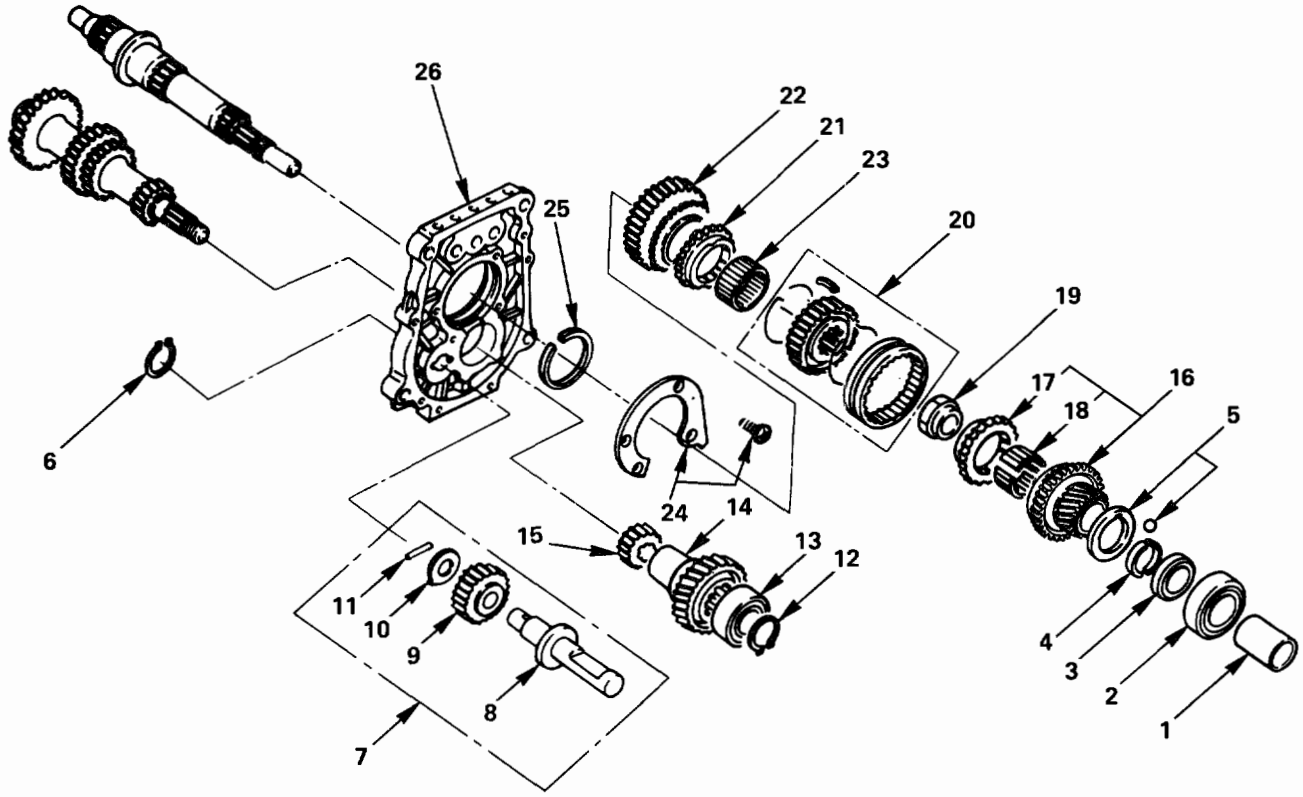

Disassembly steps

1. Oil seal collar
2. Ball bearing
3. Retainer
4. Thrust plate
5. Thrust washer and lock ball
6. Reverse idler gear snap ring
7. Reverse idler gear assembly
8. Reverse idler shaft
9. Reverse idler gear
10. Thrust washer
11. Idle shaft pin
12. Bearing snap ring
13. Ball bearing
14. Counter 5th gear
15. Counter reverse gear
16. 5th gear
17. 5th block ring
18. Needle bearing
19. Mainshaft nut
20. Rev-5th synchronizer assembly
21. Reverse block ring
22. Reverse gear
23. Needle bearing
24. Bearing plate and screw
25. Bearing snap ring
26. Intermediate plate

Reassembly steps

To reassemble, follow the disassembly steps in the reverse order.

Fig. 7B-46

DISASSEMBLY

1. **Oil Seal Collar**
2. **Ball bearing**
3. **Retainer**
   - Set the retaining ring remover to the retainer and the mainshaft end (Fig. 7B-47).
   - Remove the retainer together with the bearing and the oil seal collar.

     The puller may be used in place of the retaining ring remover.

     Retainer Remover: J-37222

     Puller: J-8433

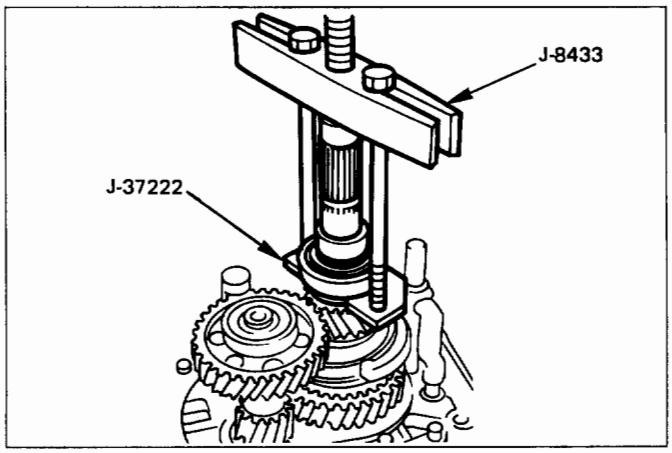

Fig. 7B-47

4. **Thrust plate**
5. **Thrust washer and lock ball**
6. **Reverse idler gear snap ring**
   - Use a pair of snap ring pliers to remove the snap ring (Fig. 7B-48).

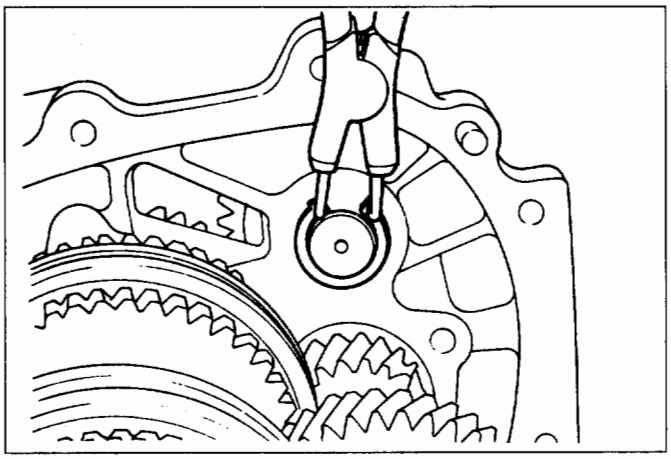

Fig. 7B-48

7. **Reverse idler gear assembly**
   - Remove the reverse idler gear assembly from the intermediate plate (Fig. 7B-48a).

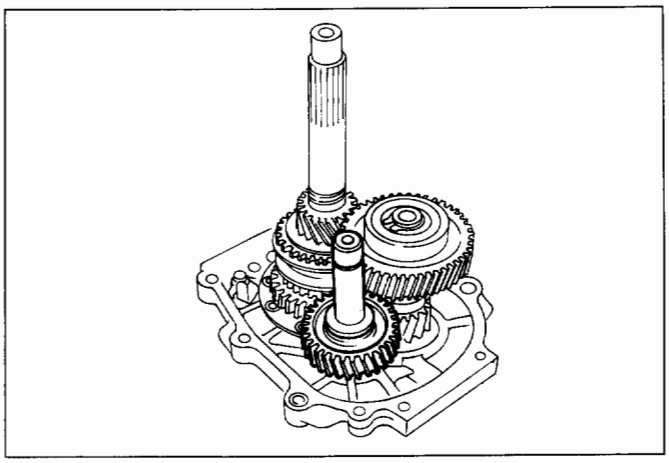

Fig. 7B-48a

8. **Reverse idler shaft**
9. **Reverse idler gear**
10. **Thrust washer**
11. **Idle shaft pin**
12. **Bearing snap ring**
    - Use a pair of snap ring pliers to remove the snap rings.
13. **Ball bearing**
14. **Counter 5th gear**
    - Engage the Rev. 5th synchronizer with the 5th gear.
    - Attach the puller to the counter gear shaft.
    - Pull the reverse shaft toward you and hold it.
    - Use the puller to remove the ball bearing and the counter 5th gear (Fig. 7B-49).

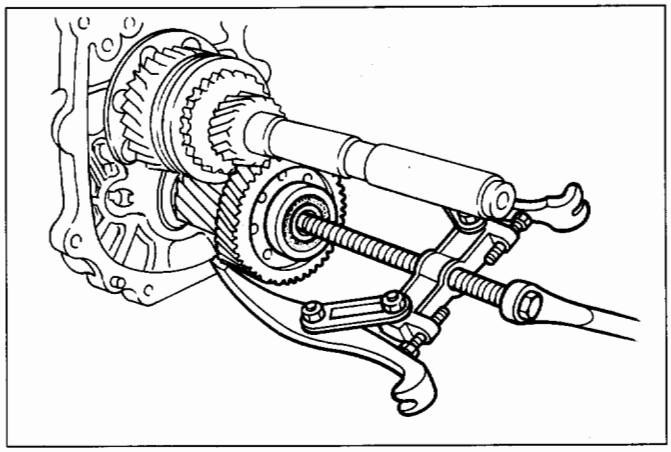

Fig. 7B-49

15. **Counter reverse gear**
16. **5th gear**
17. **5th block ring**
18. **Needle bearing**
    - Remove the needle bearing (2 piece type) (Fig. 7B-50).

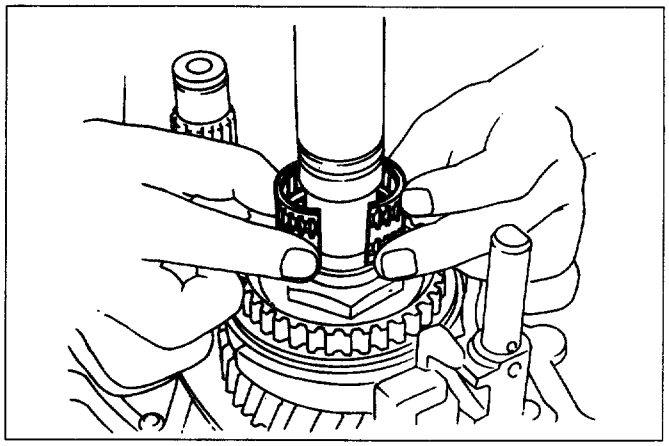

Fig. 7B-50

19. Mainshaft nut (Fig. 7B-51)

- Engage the 3rd-4th synchronizer with the 3rd gear.
- Engage the 1st-2nd synchronizer with the 1st gear.
- Attach the holding fixture to the mainshaft and the counter gear.

  Holding fixture: J-37224

  Base: J-3289-20
- Use the mainshaft nut wrench to remove the mainshaft nut (Fig. 7B-52).

  Wrench: J-37219

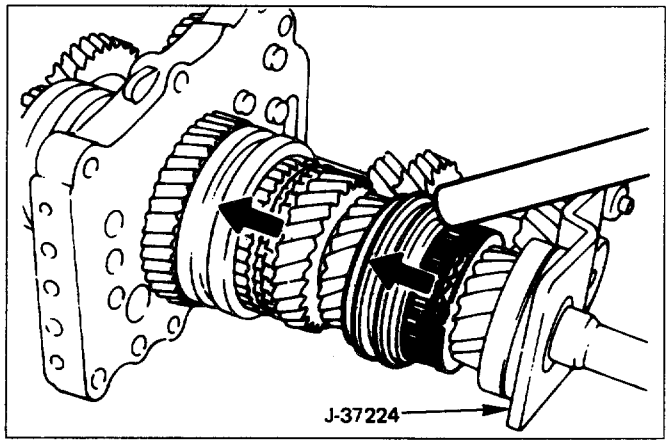

Fig. 7B-51

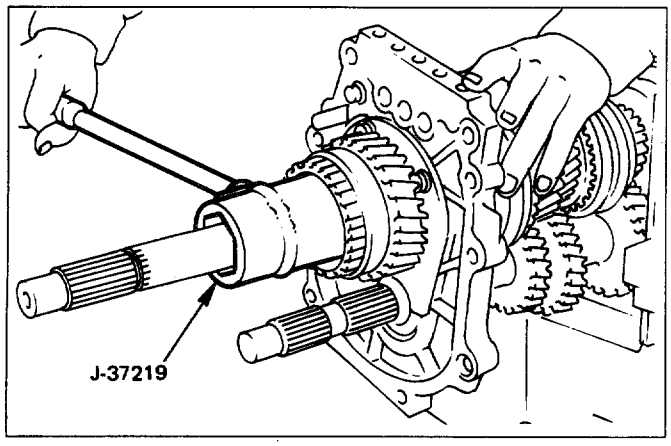

Fig. 7B-52

20. Rev-5th synchronizer assembly

21. Reverse block ring

22. Reverse gear

- Use screw drivers between the reverse gear and bearing plate to remove the Rev-5th synchronizer assembly together with reverse block ring and gear (Fig. 7B-53).

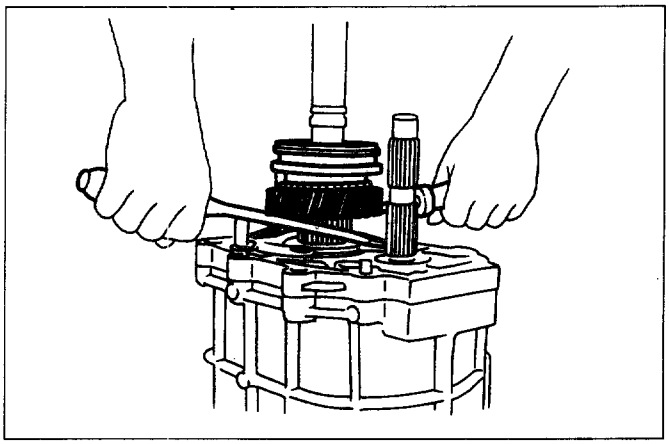

Fig. 7B-53

23. Needle bearing

24. Bearing plate and screw

- Use the torx bit wrench to remove the bearing plate screw from the intermediate plate (Fig. 7B-54).

  Torx bit wrench: J-37225 (T45).

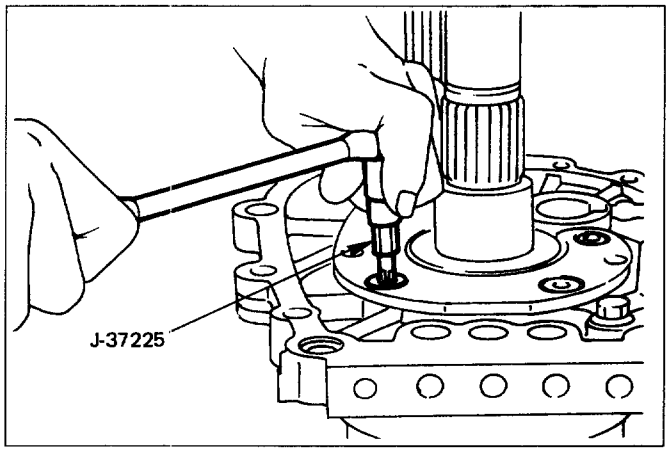

Fig. 7B-54

25. Bearing snap ring

26. Intermediate plate

- Use the snap ring pliers ② to remove the mainshaft bearing snap ring ① (Fig. 7B-55).
- Hold the snap ring open with the pliers.
- Push the intermediate plate toward the rear of the transmission to remove it.

  The bearing snap ring will come free.

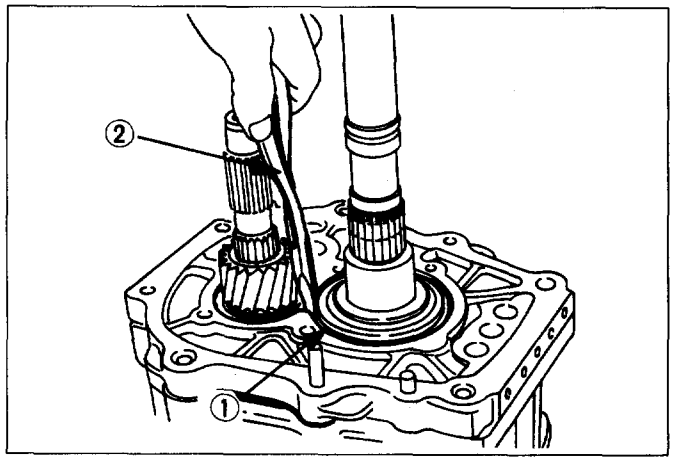

Fig. 7B-55

INSPECTION AND REPAIR

Refer to "TOP GEAR SHAFT, MAIN GEAR SHAFT, AND COUNTER GEAR" in this section for inspection and repair.

REASSEMBLY

26. Intermediate plate

- Mesh the counter gear with the mainshaft assembly.
- Install the holding fixture to the mainshaft and the counter gear (Fig. 7B-56).
  Holding fixture: J-37224
  Holding fixture base: J-3289-20
- Place the holding fixture (with the mainshaft and the counter shaft) in a vise.
- Install the intermediate plate.

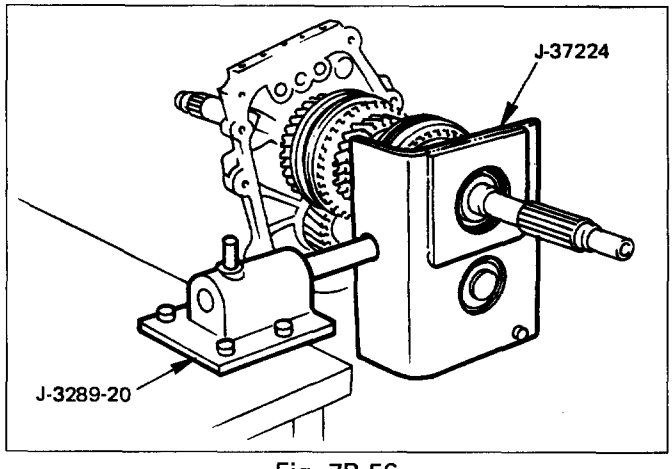

Fig. 7B-56

25. Bearing snap ring

24. Bearing plate and screw

- Apply recommended thread locking agents (LOCTITE 242) or its equivalent to each of the bearing plate screw threads.
  Refer to "RECOMMENDED THREAD LOCKING AGENTS" of the Section 0 in this manual.
- Tighten the screws to the specified torque (Fig. 7B-57).
  Torx bit wrench: J-37225 (T45)

Torque N·m (lb·ft)	15 (11)

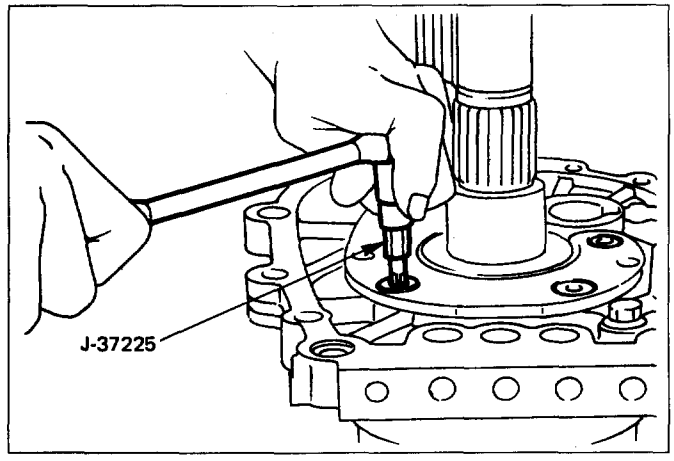

Fig. 7B-57

23. Needle bearing

22. Reverse gear

21. Reverse block ring

20. Rev-5th synchronizer assembly (Fig. 7B-58 & 7B-59)

1) Turn the clutch hub face ① toward the sleeve groove ② on the outer circumference.
2) Check that the inserts ③ fit snugly into the block ring insert grooves.
3) Check that the inserts springs ④ are fitted to the inserts as shown in the illustration.
4) Check that the clutch hub ⑤ and the sleeve ⑥ slide smoothly.
5) Install the synchronizer assembly to the mainshaft.
   The clutch hub face (with the heavy boss) must be facing the reverse gear side.

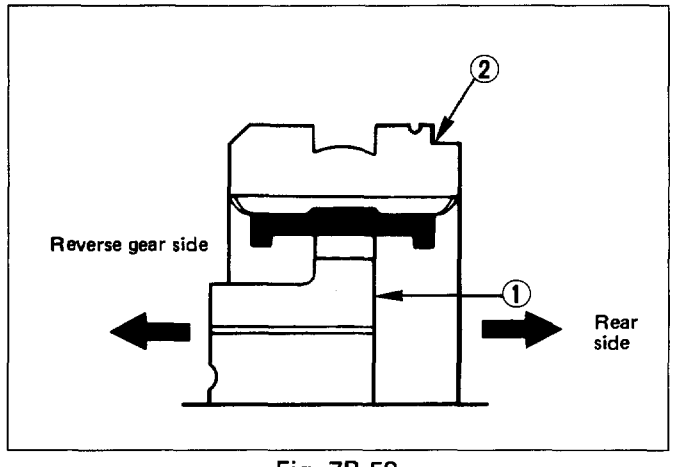

Fig. 7B-58

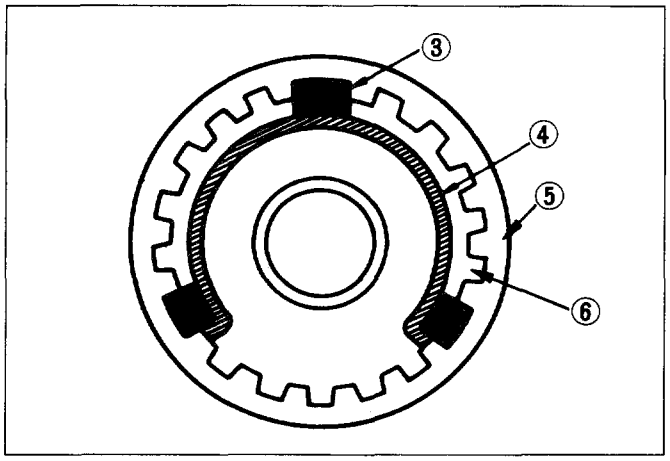

Fig. 7B-59

19. Mainshaft nut

1) Mesh the 1st-2nd synchronizer with both the 1st and 3rd gears (double engagement) (Fig. 7B-60).
   This will prevent the mainshaft from turning.
2) Install the new mainshaft hub nut.
3) Use the mainshaft nut wrench to tighten the mainshaft nut to the specified torque (Fig. 7B-61).
   Wrench: J-37219

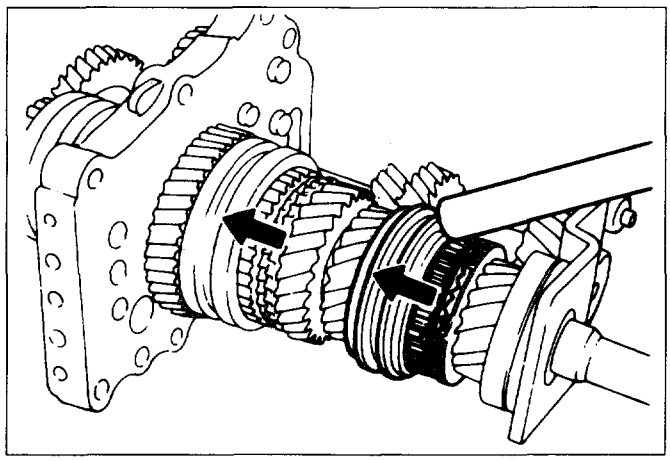

Fig. 7B-60

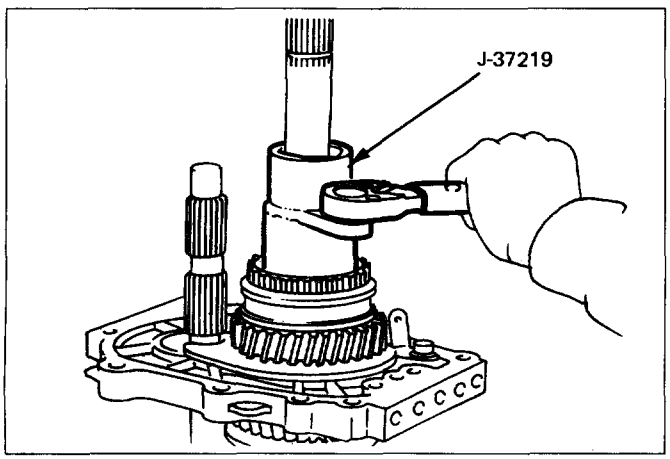

Fig. 7B-61

Torque N·m (lb·ft)	137 (101)

4) Use a punch to stake the mainshaft nut (Fig. 7B-62).

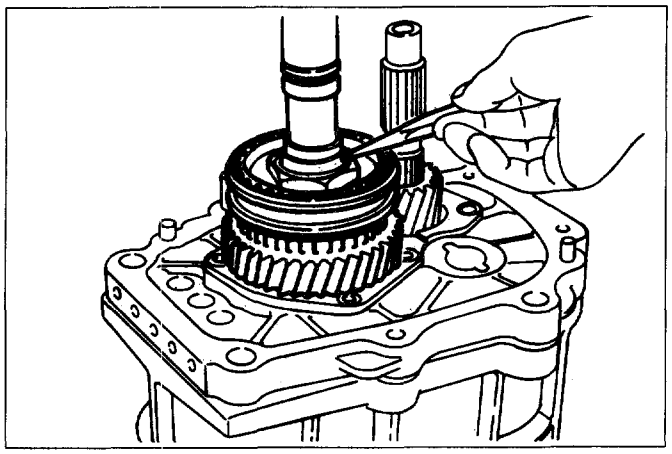

Fig. 7B-62

18. Needle bearing

17. 5th block ring

16. 5th gear

15. Counter reverse gear

- Apply engine oil to the counter reverse gear and the reverse gear.
- Install the counter reverse gear to the counter gear.
  The reverse gear projection must be facing the intermediate plate. (Fig. 7B-63).

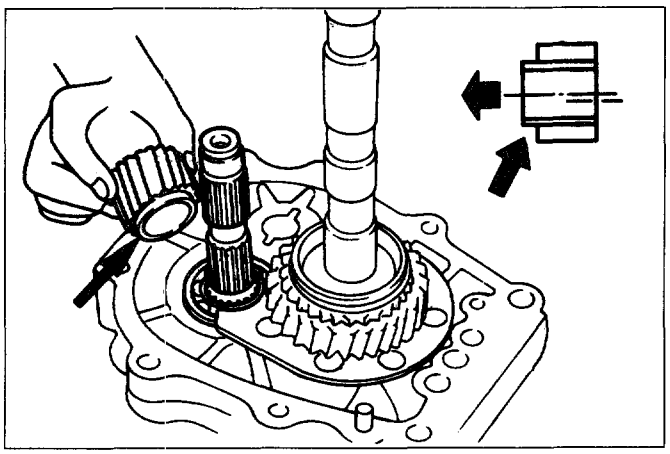

Fig. 7B-63

14. Counter 5th gear

- Install the counter 5th gear to the transmission (Fig. 7B-64).

13. Ball bearing

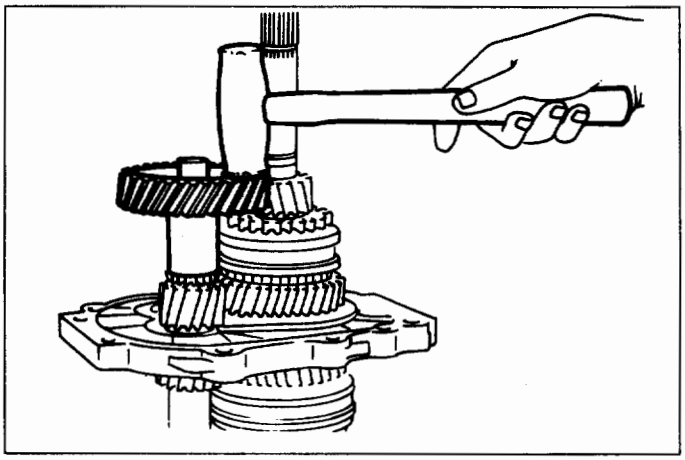

Fig. 7B-64

12. Bearing snap ring

- Select the snap ring which will provide the minimum clearance between the ball bearing and the snap ring (Fig. 7B-65).
- There are six snap ring sizes available. The snap rings are color-coded to indicate their thickness (Fig. 7B-66).

Ball bearing and snap ring clearance mm (in)

Standard
0-0.15 (0-0.0059)

Snap ring availability mm (in)

Thickness mm (in)	Color-coding
1.1 (0.043)	White
1.2 (0.047)	Yellow
1.3 (0.051)	Blue
1.4 (0.055)	Pink
1.5 (0.059)	Green
1.6 (0.063)	Brown

- Use a pair of snap ring pliers to install the snap ring to the counter gear shaft. The snap ring must be fully inserted into the counter gear shaft snap ring groove.

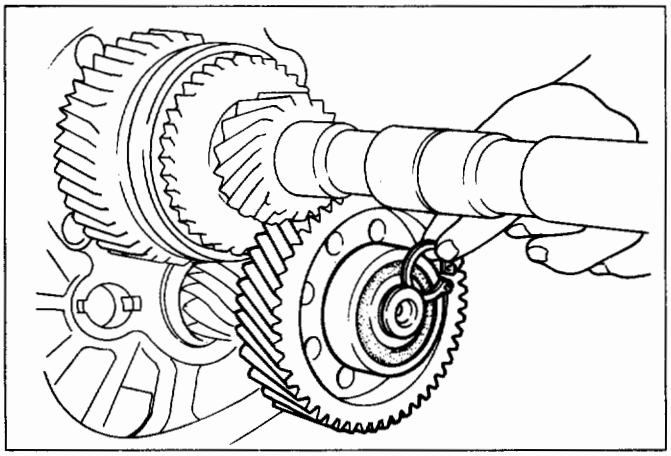

Fig. 7B-65

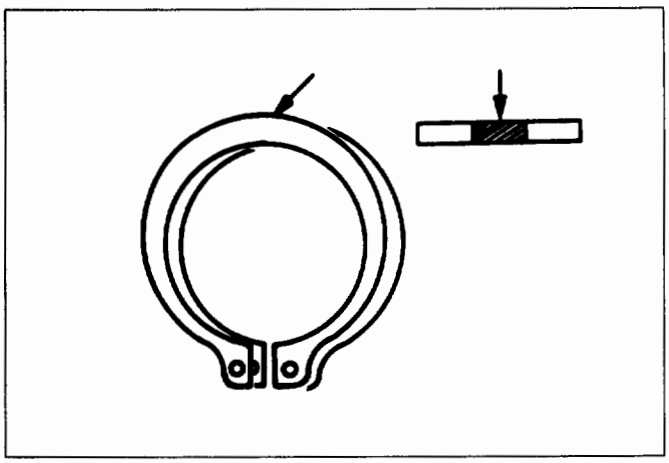

Fig. 7B-66

11. Idle shaft pin

10. Thrust washer

9. Reverse idler gear

8. Reverse idler shaft

7. Reverse idler gear assembly

6. Reverse idler gear snap ring

- Select the snap ring which will provide the minimum clearance between the intermediate plate and the snap ring (Fig. 7B-67).

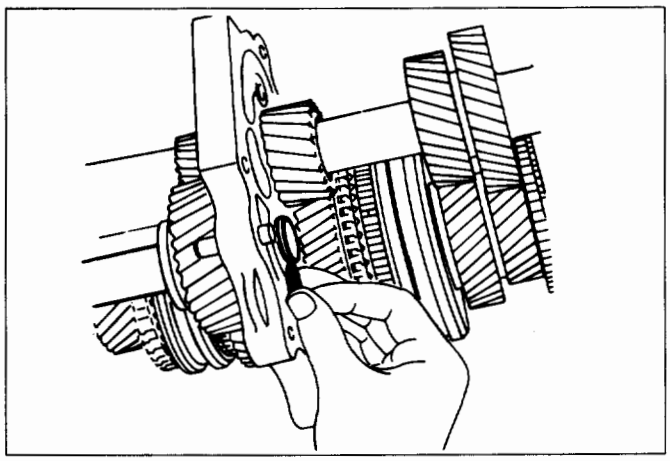

Fig. 7B-67

- There are three snap ring sizes available. The snap rings are color-coded to indicate their thickness (Fig. 7B-68).

Intermediate plate and snap ring clearance mm (in)

Standard
0-0.15 (0-0.0059)

Snap ring availability mm (in)

Thickness mm (in)	Color-coding
1.2 (0.047)	White
1.3 (0.051)	Yellow
1.4 (0.055)	Blue

- Use a pair of snap ring pliers to install the snap ring to the reverse idler shaft.
  The snap ring must be fully inserted into the reverse idler shaft snap ring groove.

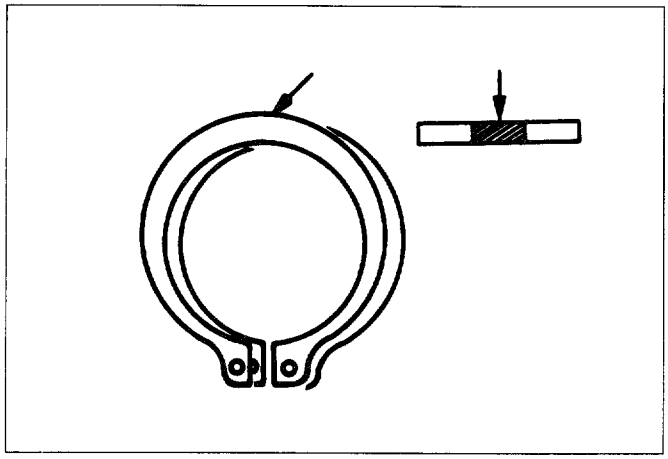

Fig. 7B-68

5. Thrust washer and lock ball

- Use a thickness gauge to measure the clearance between the 5th gear and the thrust washer.

5th gear and thrust washer clearance

Standard mm (in)	0.10-0.25 (0.004 - 0.010)

- Measure clearance "A" (Fig. 7B-69).

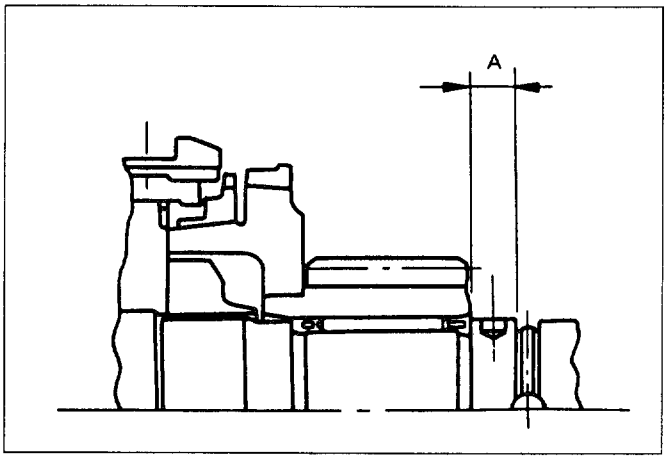

Fig. 7B-69

- Select appropriate thrust washer from chart.
- There are four thrust washer sizes available.
- The thrust washers are color-coded to indicate their thickness (Fig. 7B-70).

Thrust washer availability

Thickness mm (in)	Color-coding	A mm (in)	Clearance mm (in)
7.9 (0.311)	White	8.05-8.1 (0.317-0.319)	0.15-0.25 (0.006-0.010)
8.0 (0.315)	Yellow	8.1-8.2 (0.319-0.323)	0.1-0.25 (0.004-0.010)
8.1 (0.319)	Green	8.2 - 8.3 (0.323-0.327)	0.1 -0.25 (0.004-0.010)
8.2 (0.323)	Blue	8.3-8.36 (0.327-0.329)	0.1-0.21 (0.004-0.008)

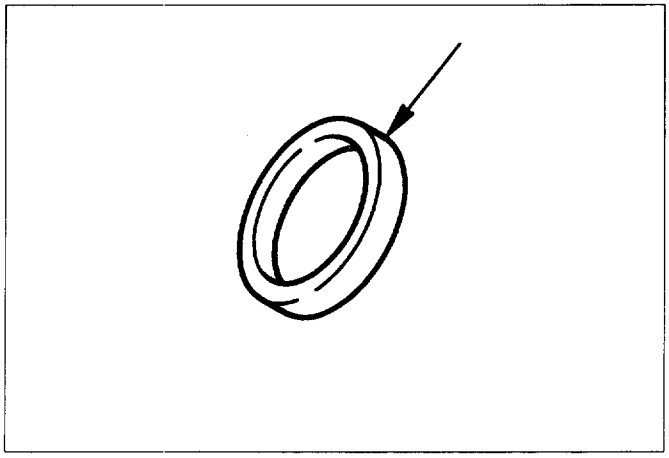

Fig. 7B-70

- Apply grease to the thrust washer and the lock ball.
- Install the thrust washer and the lock ball.

4. Thrust plate

3. Retainer

2. Ball bearing

- Apply engine oil to the bearing inner and outer circumference.
- Use the installer to install the ball bearing to the mainshaft in proper direction (Fig. 7B-71).
  Installer: J-37223

1. Oil seal collar

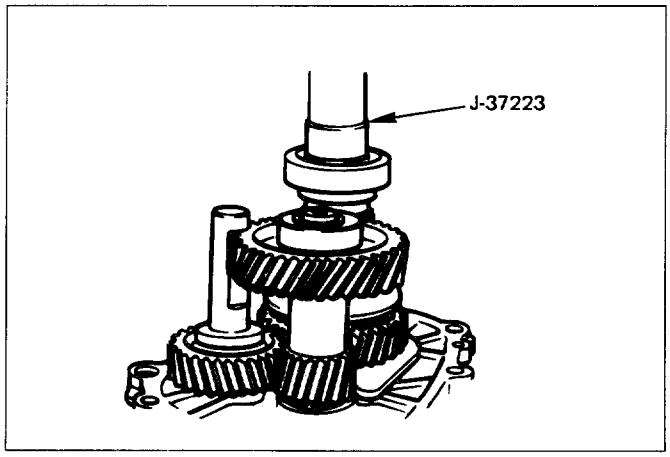

Fig. 7B-71

TOP GEAR SHAFT, MAIN GEAR SHAFT, AND COUNTER GEAR SHAFT

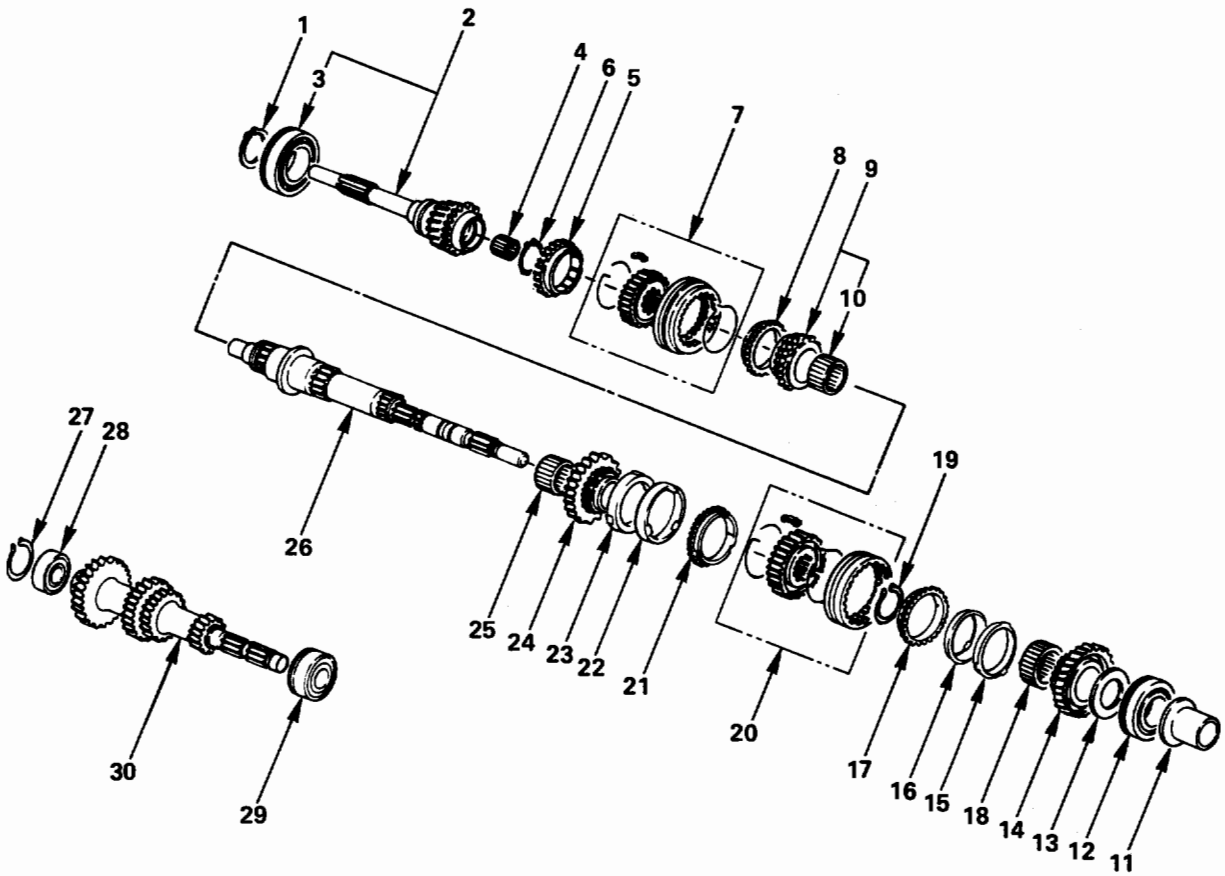

Disassembly steps

1. Top gear shaft snap ring
2. Top gear shaft
3. Ball bearing
4. Needle bearing
5. Top block ring
6. Mainshaft snap ring
7. 3rd-4th synchronizer assembly
8. 3rd block ring
9. 3rd gear
10. Needle bearing
11. Needle bearing collar
12. Mainshaft ball bearing
13. 1st gear thrust bearing
14. 1st gear
15. 1st inside ring
16. 1st outside ring
17. 1st block ring
18. Needle bearing
19. Clutch hub snap ring
20. 1st-2nd synchronizer assembly
21. 2nd block ring
22. 2nd outside ring
23. 2nd inside ring
24. 2nd gear
25. Needle bearing
26. Mainshaft
27. Bearing snap ring
28. Front roller bearing
29. Center roller bearing
30. Counter gear shaft

Reassembly steps

To reassemble, follow the disassembly steps in the reverse order.

Fig. 7B-72

DISASSEMBLY

1. **Top gear shaft snap ring**
   - Use a pair of snap ring pliers to remove the snap ring.
2. **Top gear shaft**
3. **Ball bearing**
   - Use a bench press and the bearing remover to remove the ball bearing (Fig. 7B-73).

     Bearing remover: J-22912-01

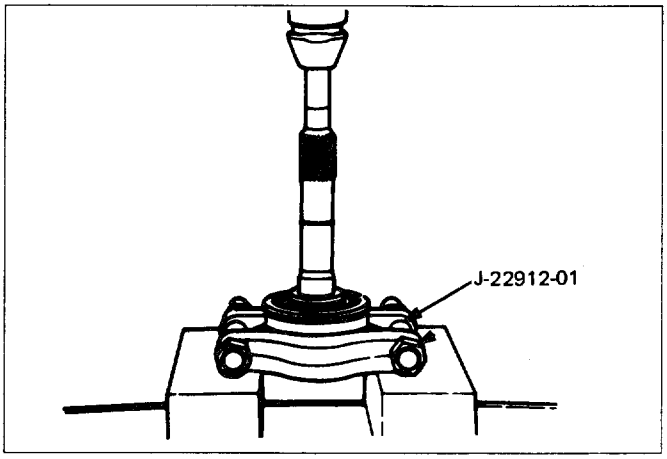

Fig. 7B-73

4. **Needle bearing**
5. **Top block ring**
6. **Mainshaft snap ring**
   - Use a pair of snap ring pliers to remove the snap ring (Fig. 7B-74).

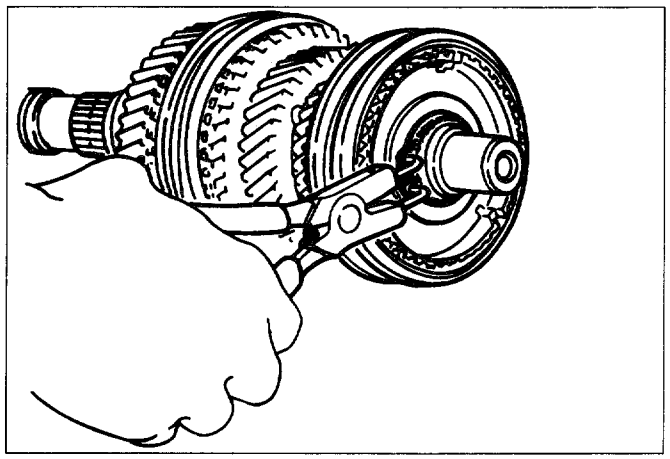

Fig. 7B-74

7. **3rd-4th synchronizer assembly**
   - Use a bench press and the bearing remover to remove the synchronizer assembly as a set (Fig. 7B-75).

     Bearing remover: J-22912-01
   - Disassemble the synchronizer assembly

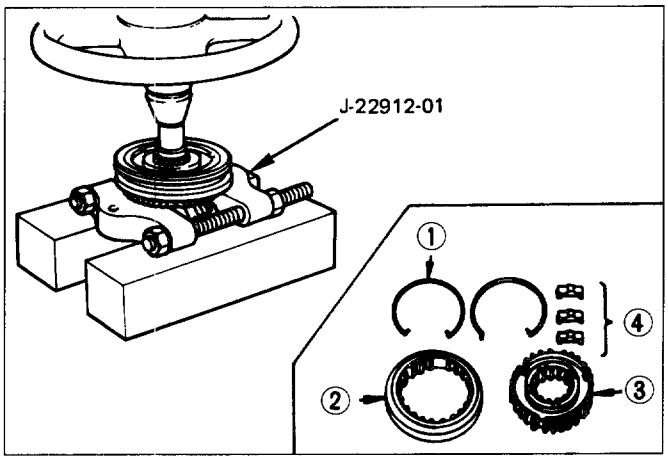

Fig. 7B-75

① Springs
② Sleeve
③ Clutch hub
④ Inserts

8. **3rd block ring**
9. **3rd gear**
10. **Needle bearing**
11. **Needle bearing collar**
12. **Mainshaft ball bearing**
13. **1st gear thrust bearing**
14. **1st gear**
    - Use a bench press and the bearing remover to remove the ball bearing (Fig. 7B-76).

      Bearing remover: J-22912-01

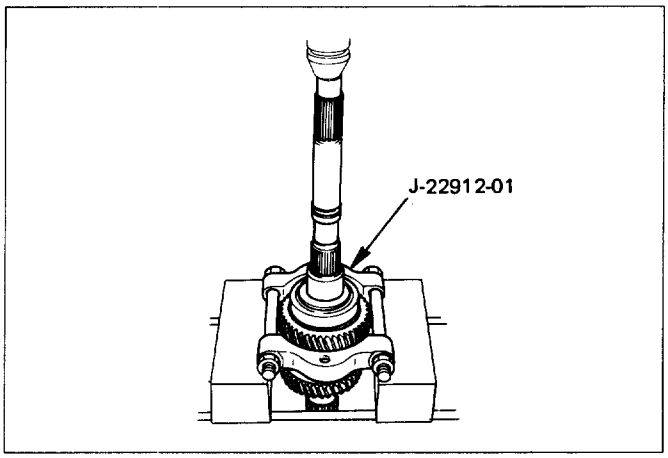

Fig. 7B-76

15. **1st inside ring**
16. **1st outside ring**
17. **1st block ring**
18. **Needle bearing**
19. **Clutch hub snap ring**
    - Use a pair of snap ring pliers to remove the snap ring (Fig. 7B-77).

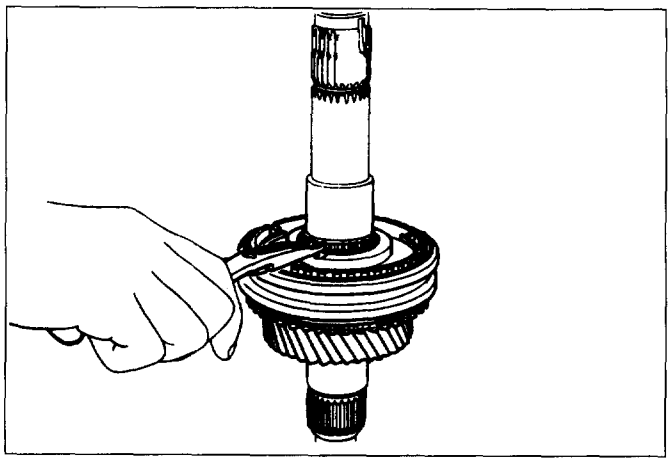

Fig. 7B-77

20. **1st-2nd synchronizer assembly**
21. **2nd block ring**
22. **2nd outside ring**
23. **2nd inside ring**
24. **2nd gear**
    - Use a bench press and the bearing remover to remove the 2nd gear together with synchronizer assembly (Fig. 7B-78).
      Bearing remover: J-22912-01

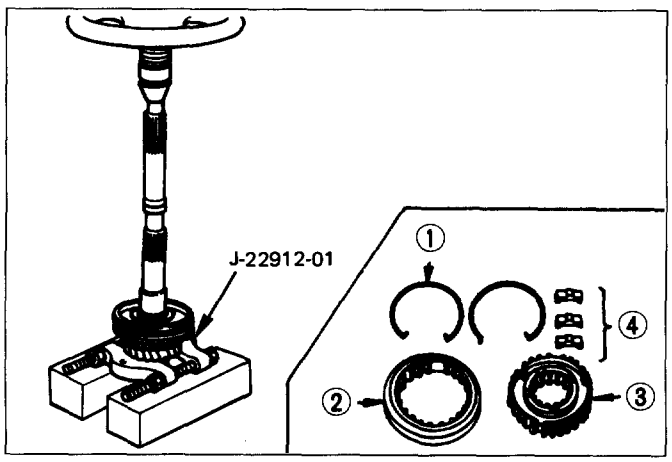

Fig. 7B-78

- Disassemble the synchronizer assembly
  ① Springs
  ② Sleeve
  ③ Clutch hub
  ④ Inserts

25. **Needle bearing**
26. **Mainshaft**
27. **Bearing snap ring**
28. **Front roller bearing**
    - Use a bench press and the bearing remover to remove the front roller bearings (Fig. 7B-79).
      Bearing remover: J-22912-01

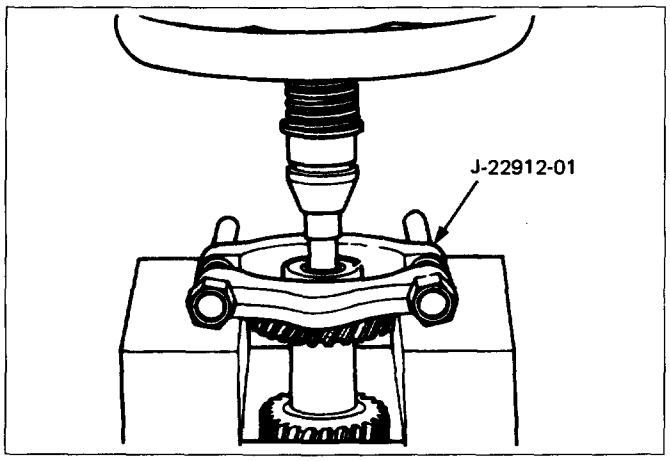

Fig. 7B-79

29. **Center roller bearing**
30. **Counter gear shaft**

INSPECTION AND REPAIR

Make the necessary adjustments, repairs, and part replacement if excessive wear or damage is discovered during inspection.

BLOCK RING AND DOG TEETH CLEARANCE

- Use a thickness gauge to measure the clearance between the block ring and the dog teeth (Fig. 7B-80).
  If the measured value exceeds the specified limit, the block ring must be replaced.

Block ring and dog teeth clearance mm (in)

Standard	Limit
1.5 (0.059)	0.8 (0.032)

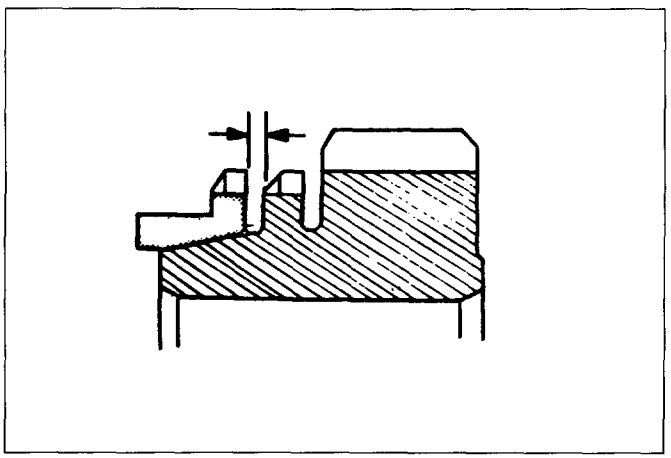

Fig. 7B-80

1ST-2ND SYNCHRONIZER (3-CONE)

- Use a thickness gauge to measure the clearance between the block ring and the dog teeth (Fig. 7B-81).
  If the measured value exceeds the specified limit, the 1st-2nd synchronizer assembly must be replaced.

Block ring and dog teeth clearance mm (in)

Standard	Limit
1.5 (0.059)	0.8 (0.032)

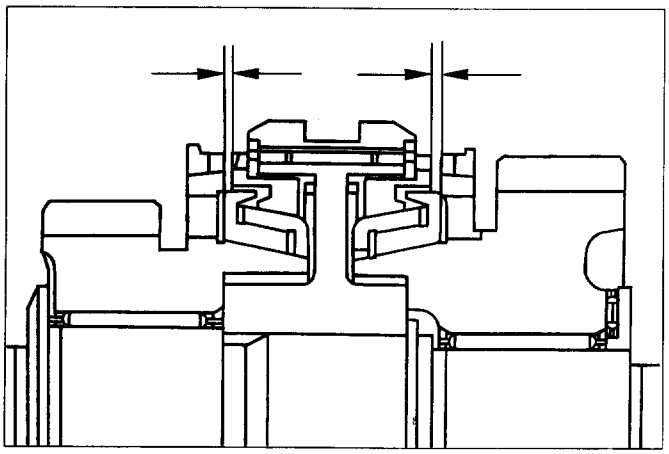

Fig. 7B-81

BLOCK RING AND INSERT CLEARANCE

- Use a vernier caliper or thickness gauge to measure the clearance between the block ring and the insert (Fig. 7B-82).
  If the measured value exceeds the specified limit, the block ring and the insert must be replaced.

Block ring and insert clearance mm (in)

	Standard	Limit
3rd-4th	3.46-3.74 (0.136-0.147)	4.0 (0.158)
1st-2nd	4.34-4.66 (0.171-0.183)	4.9 (0.193)
5th	3.59-3.91 (0.141-0.154)	4.1 (0.161)

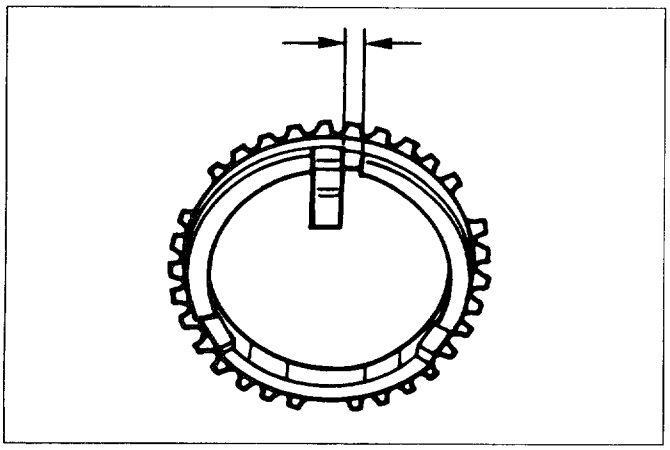

Fig. 7B-82

CLUTCH HUB AND INSERT CLEARANCE

- Use a thickness gauge to measure the clearance between the clutch hub and the insert ring (Fig. 7B-83).
  If the measured value exceeds the specified limit, the clutch hub and the insert must be replaced.

Clutch hub and insert clearance mm (in)

	Standard	Limit
3rd-4th	0.01-0.19 (0.0004-0.0075)	0.3 (0.012)
1st-2nd 5th	0.09-0.31 (0.0035-0.0122)	0.4 (0.016)

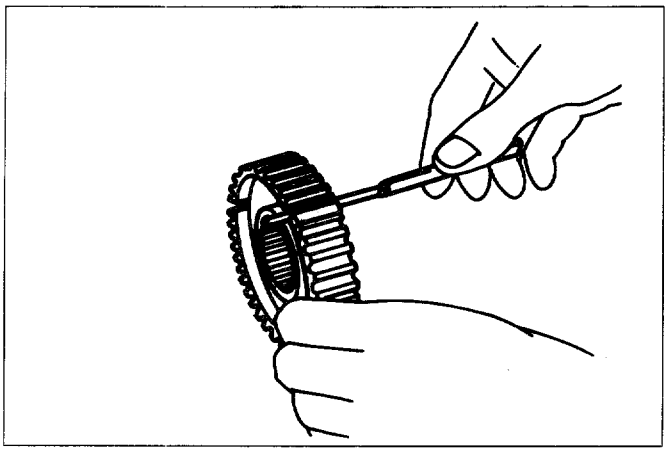

Fig. 7B-83

MAINSHAFT RUN-OUT

- Install the mainshaft to a grinding machine.
- Use a dial indicator to measure the mainshaft central portion run-out (Fig. 7B-84).
  If the measured mainshaft run-out exceeds the specified limit, the mainshaft must be replaced.

Mainshaft run-out mm (in)

Limit
0.05 (0.0020)

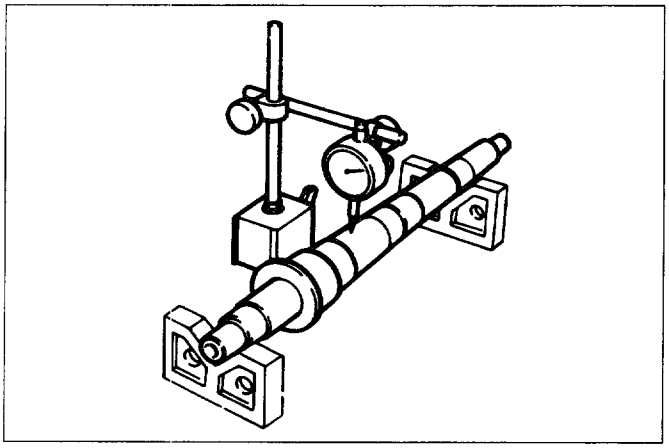

Fig. 7B-84

GEAR INSIDE DIAMETER

- Use an inside dial indicator to measure the gear inside diameter (Fig. 7B-85).
  If the measured value exceeds the specified limit, the gear must be replaced.

Gear inside diameter — mm (in)

	Standard	Limit
1st 3rd	45.000-45.013 (1.771-1.772)	45.100 (1.776)
2nd	52.000-52.013 (2.047-2.048)	52.100 (2.051)
Rev.	48.000-48.013 (1.889-1.890)	48.100 (1.894)
5th	32.000-32.013 (1.259-1.260)	32.100 (1.246)

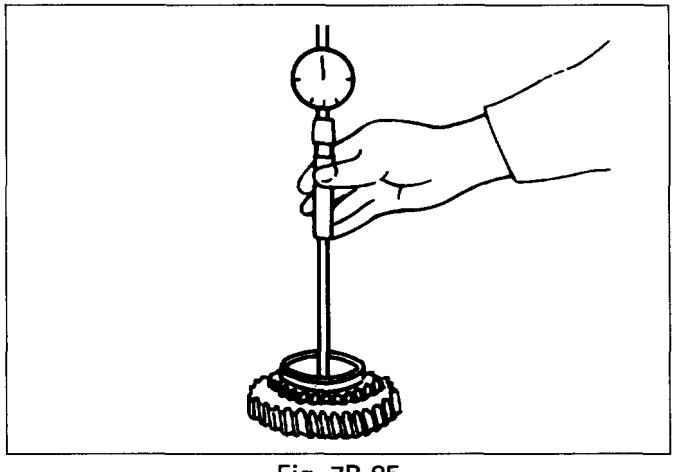

Fig. 7B-85

REVERSE IDLER GEAR AND IDLER GEAR SHAFT CLEARANCE

- Use a micrometer to measure the idler gear shaft diameter (Fig. 7B-86).
- Use an inside dial indicator to measure the idler gear inside diameter (Fig. 7B-86).
- Calculate the idler gear and idler gear shaft clearance.
  Idler gear inside diameter—idler gear shaft diameter = idle gear and idler gear shaft clearance.
  If the measured value exceeds the specified limit, the idle gear and/or the idler gear shaft must be replaced.

Idler gear and idler gear shaft clearance — mm (in)

Standard	Limit
0.041-0.074 (0.0016-0.0029)	0.150 (0.0059)

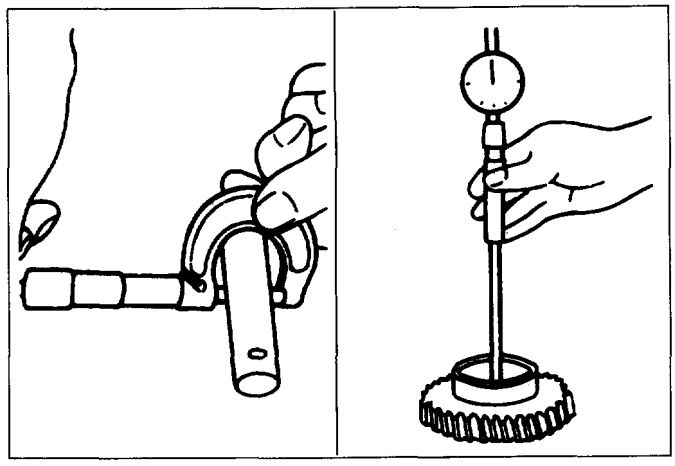

Fig. 7B-86

CLUTCH HUB SPLINE PLAY

- Set a dial indicator to the clutch hub to be measured (Fig. 7B-87).
- Move the clutch hub as far as possible to both the right and the left.
  Note the dial indicator reading.
  If the measured value exceeds the specified limit, the clutch hub must be replaced.

Clutch hub spline play — mm (in)

	Standard	Limit
1st-2nd 3rd-4th	0-0.1 (0-0.004)	0.2 (0.008)
Rev. 5th	0-0.2 (0-0.008)	0.3 (0.012)

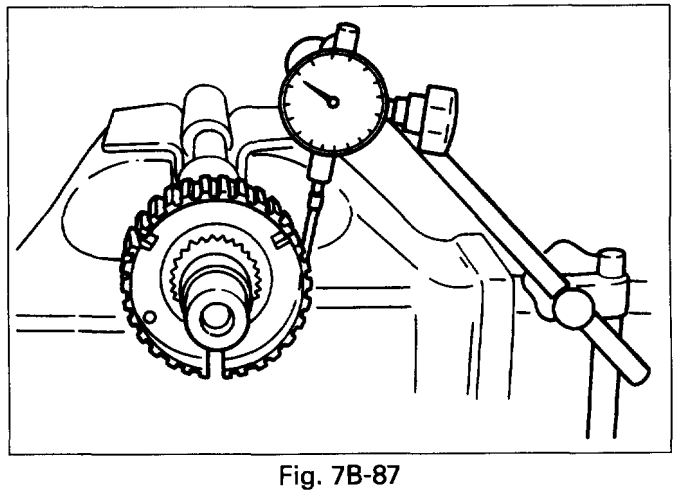

Fig. 7B-87

BALL BEARING PLAY

- Use a dial indicator to measure the ball bearing play (Fig. 7B-79).

Ball bearing play — mm (in)

Limit
0.2 (0.008)

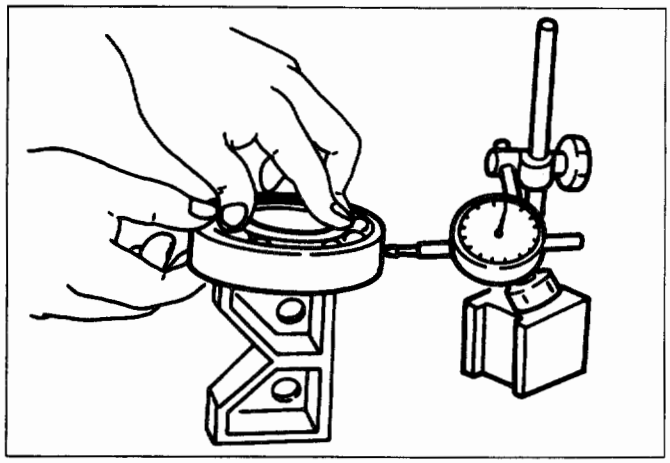

Fig. 7B-88

REASSEMBLY

30. Counter gear shaft

29. Center roller bearing

- Apply engine oil to the bearing inner and outer circumferences.
- Install the roller bearing in the proper direction (Fig. 7B-89).

NOTE:
Check that outer race moves only in the direction of arrow.

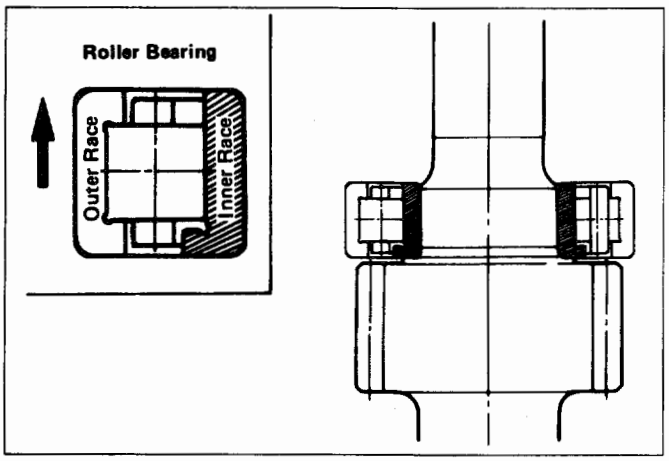

Fig. 7B-89

28. Front roller bearing (Fig. 7B-90)

- Use bearing installer to install the front roller bearing inner race to the counter gear shaft.
- Install the outer race and roller assembly. The snap ring groove must be facing the transmission front side.
- Use bearing installer to install the ring.
  Bearing installer: J-35283

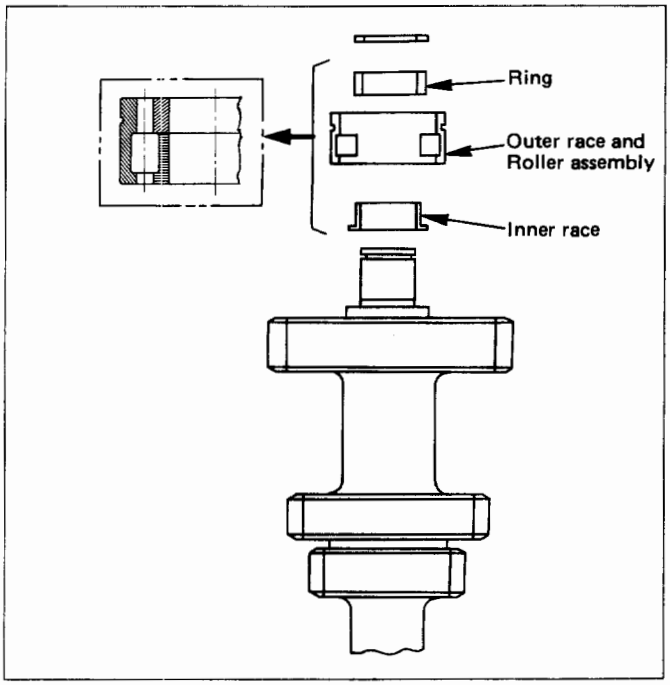

Fig. 7B-90

27. Bearing snap ring

26. Mainshaft

25. Needle bearing

24. 2nd gear

- Apply engine oil to the needle bearing and the 2nd gear thrust surfaces.
- Install the needle bearing and the 2nd gear to the mainshaft.
  The 2nd gear dog teeth must be facing the transmission rear side (Fig. 7B-91).

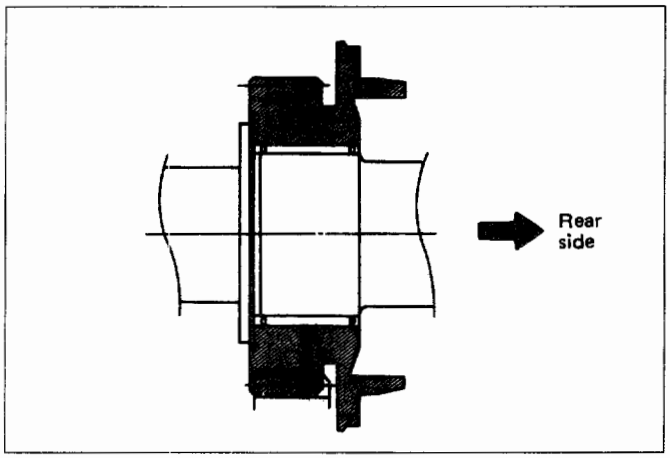

Fig. 7B-91

23. 2nd inside ring (Fig. 7B-92)

22. 2nd outside ring (Fig. 7B-92)

21. 2nd block ring (Fig. 7B-92)

- Apply engine oil to the synchronizer ring friction surfaces.

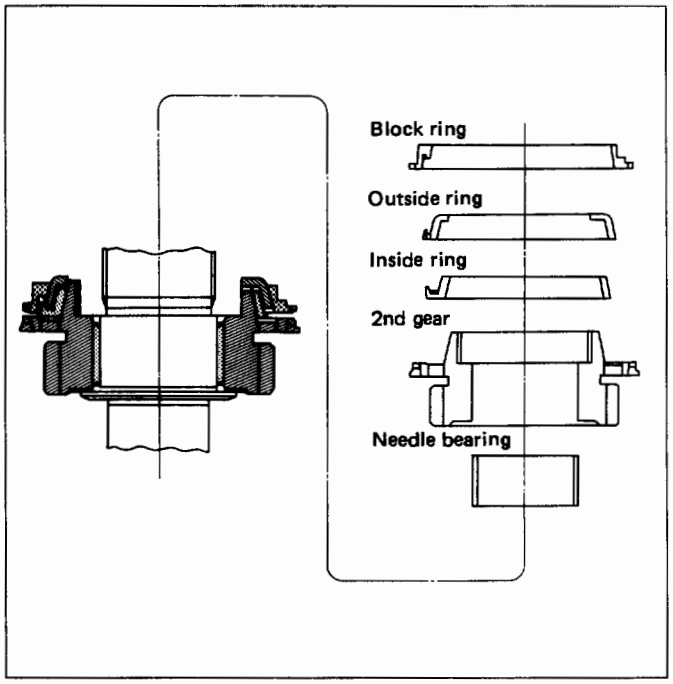

Fig. 7B-92

20. 1st-2nd synchronizer assembly (Fig. 7B-93, Fig. 7B-94)

1) Check that the inserts ③ fit snugly into the block ring insert grooves.
2) Check that the inserts springs ④ are fitted to the inserts as shown in the illustration.
3) Check that the clutch hub ⑤ and the sleeve ⑥ slide smoothly.
4) Install the synchronizer assembly to the mainshaft.
   The clutch hub face (with the heavy boss) must be facing the 2nd gear side.

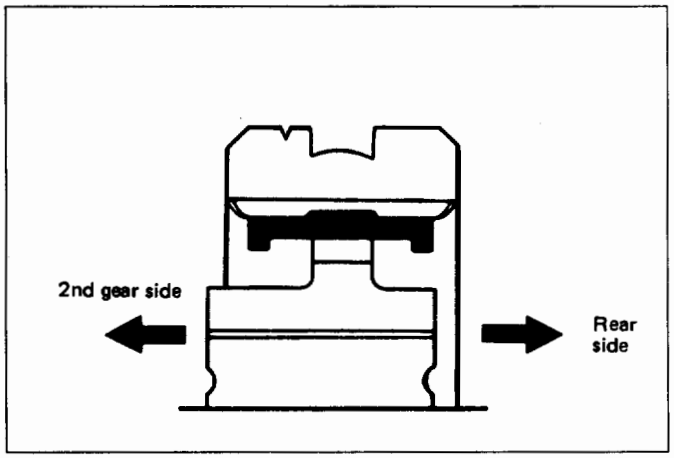

Fig. 7B-93

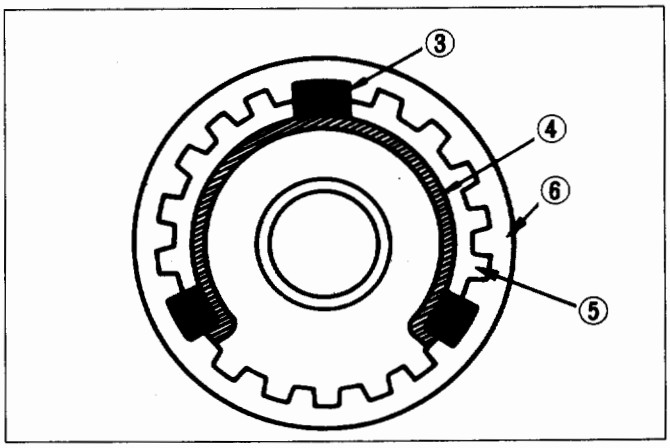

Fig. 7B-94

19. Clutch hub snap ring

- Select the snap ring which will provide the minimum clearance between the 1st-2nd clutch hub and the snap ring (Fig. 7B-95).
  There are three snap ring sizes available.
  The snap rings are color-coded to indicate their thickness (Fig. 7B-96).

Clutch hub and snap ring clearance mm (in)
Standard
0-0.1 (0-0.004)

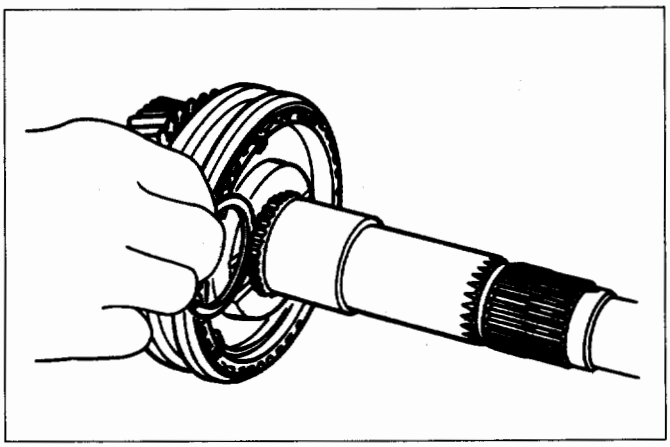

Fig. 7B-95

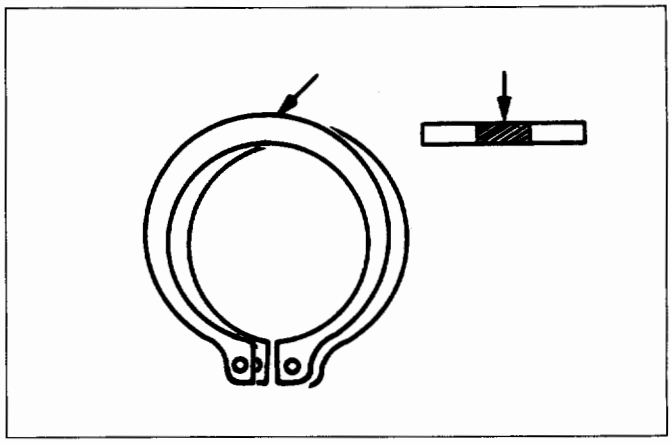

Fig. 7B-96

Snap ring availability mm (in)

Thickness	Color-coding
1.80 (0.071)	White
1.85 (0.073)	Yellow
1.90 (0.075)	Blue

- Use a pair of snap ring pliers to install the snap ring to the mainshaft (Fig. 7B-97).
  The snap ring must be fully inserted into the mainshaft snap ring groove.

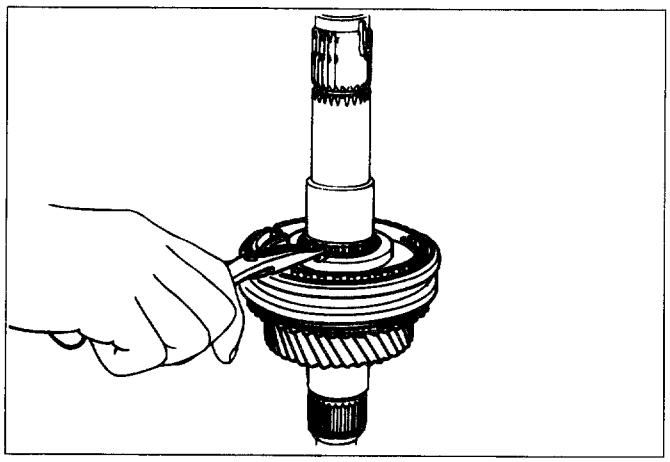

Fig. 7B-97

18. Needle bearing (Fig. 7B-98)

17. 1st block ring (Fig. 7B-98)

16. 1st outside ring (Fig. 7B-98)

15. 1st inside ring (Fig. 7B-98)

14. 1st gear (Fig. 7B-98)

- Apply engine oil to the needle bearing, 1st gear thrust surfaces and synchronizer ring friction surfaces.
- Install the needle bearing and the 1st gear to the mainshaft.
  The 1st gear dog teeth must be facing the transmission front side.

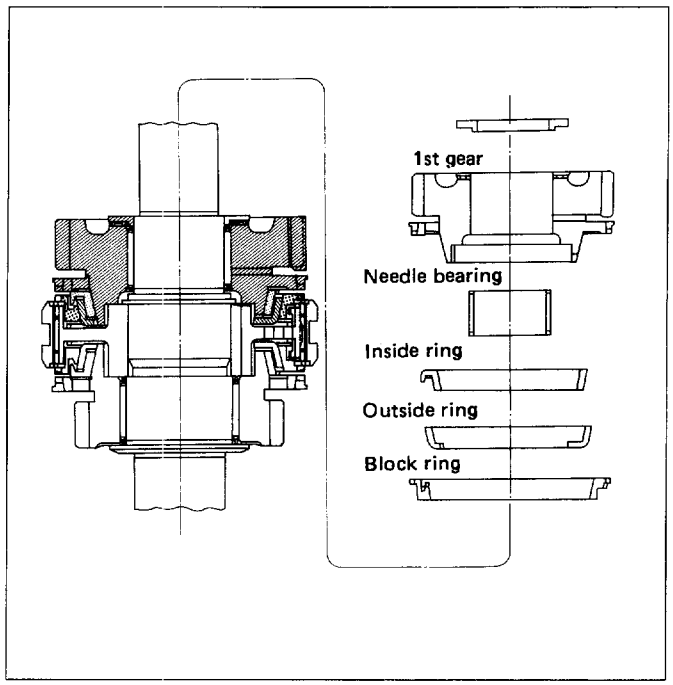

Fig. 7B-98

13. 1st gear thrust bearing

- Install the thrust bearing and the race to the mainshaft (Fig. 7B-99).
  The thrust bearing side must be facing the transmission front side.

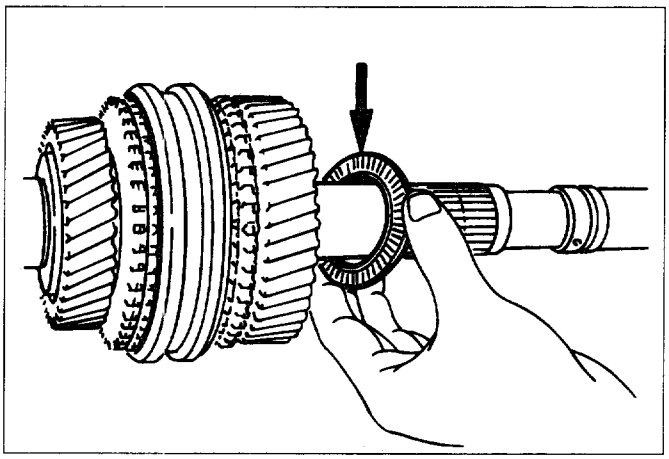

Fig. 7B-99

12. Mainshaft ball bearing

11. Needle bearing collar

- Apply engine oil to the ball bearing and the mainshaft.
- Install the ball bearing and collar to the mainshaft.
  The ball bearing snap ring groove must be facing the transmission rear side.
- Use a bench press to slowly force the collar into place (Fig. 7B-100).
  Installer: J-6133-01

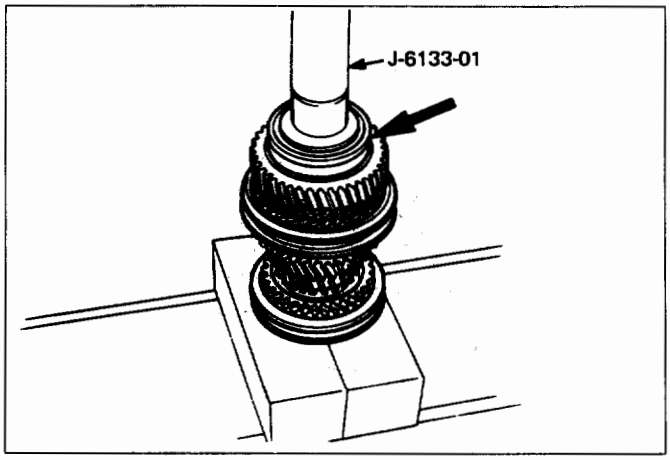

Fig. 7B-100

10. Needle bearing

9. 3rd gear

- Apply engine oil to the needle bearing and the 3rd gear thrust surfaces.
- Install the needle bearing and the 3rd gear to the mainshaft.
  The 3rd gear dog teeth must be facing the transmission front side (Fig. 7B-101).

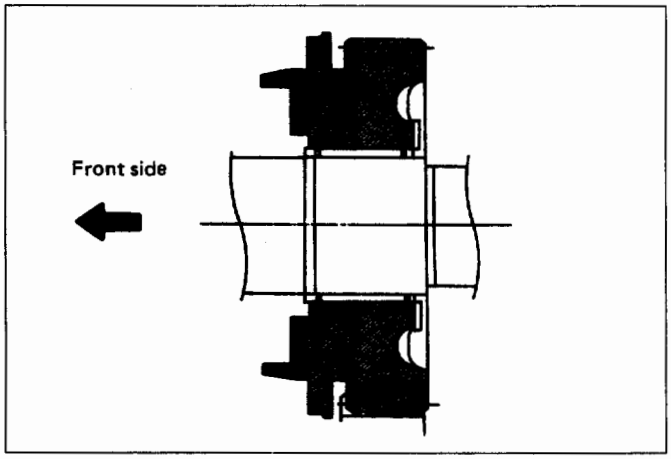

Fig. 7B-101

8. 3rd block ring

7. 3rd-4th synchronizer assembly (Fig. 7B-102, Fig. 7B-103)

1) Check that the inserts ③ fit snugly into the block ring insert grooves.
2) Check that the insert springs ④ are fitted to the inserts as shown in the illustration.
3) Check that the clutch hub ⑤ and the sleeve ⑥ slide smoothly.
4) Install the synchronizer assembly to the mainshaft.
   The clutch hub face (with the heavy boss) must be facing the 3rd gear side.

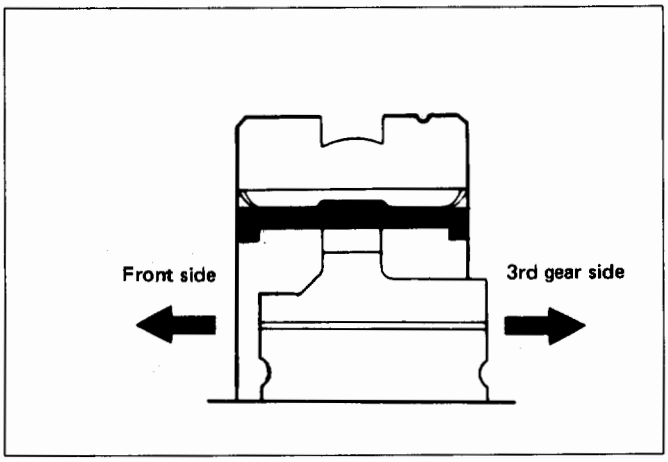

Fig. 7B-102

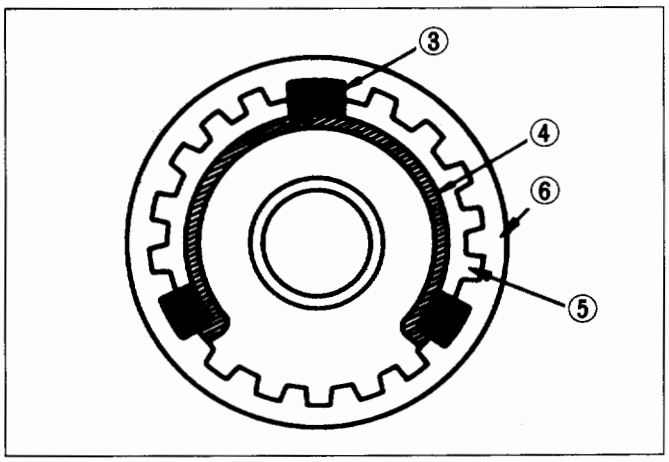

Fig. 7B-103

6. Mainshaft snap ring

- Select the snap ring which will provide the minimum clearance between the 3rd-4th clutch hub and the snap ring (Fig. 7B-104).
  There are three snap ring sizes available.
  The snap rings are color-coded to indicate their thickness (Fig. 7B-105).

Clutch hub and snap ring clearance mm (in)

Standard
0-0.1 (0-0.004)

Snap ring availability mm (in)

Thickness	Color-coding
1.80 (0.071)	White
1.85 (0.073)	Yellow
1.90 (0.075)	Blue

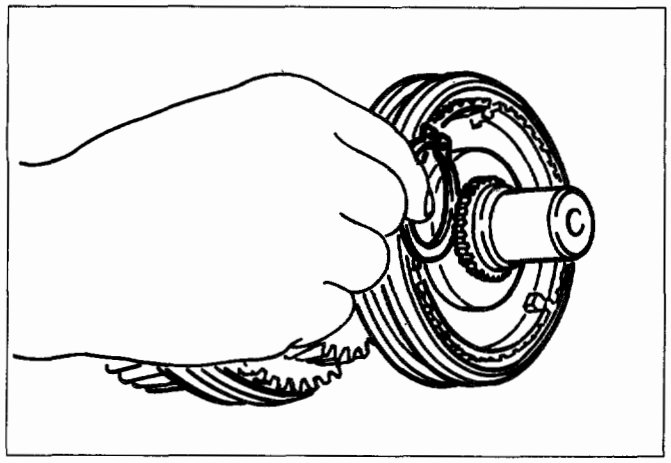

Fig. 7B-104

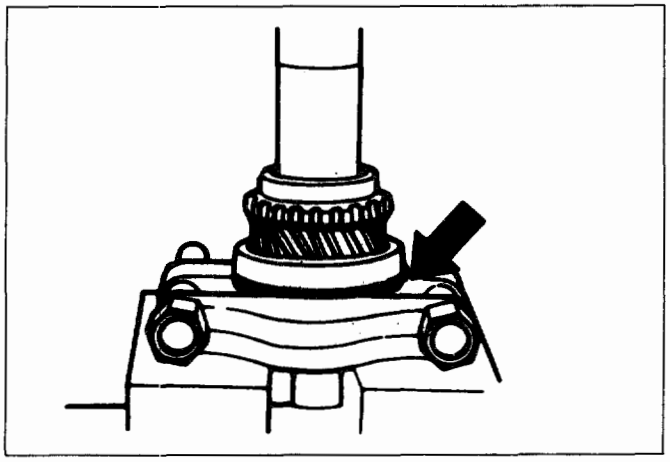

Fig. 7B-106

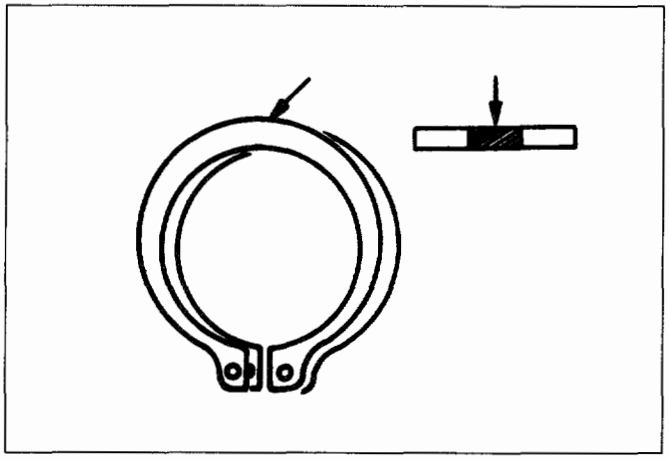

Fig. 7B-105

- Use a pair of snap ring pliers to install the snap ring to the mainshaft.
  The snap ring must be fully inserted into the mainshaft snap ring groove.

5. **Top block ring**
4. **Needle bearing**
   - Apply grease to the bearing inner and outer circumferences.
3. **Ball bearing**
2. **Top gear shaft**
1. **Top gear shaft snap ring**
   - Use a bench press to install the top gear shaft ball bearing to the mainshaft (Fig. 7B-106).
     The snap ring groove must be facing the transmission front side.
   - Use a pair of snap ring pliers to install the snap ring to the bearing.

MAIN DATA AND SPECIFICATIONS

GENERAL SPECIFICATIONS

Transmission type		Fully synchronized 5-forward gears
Transfer case		Constant mesh type gears shifting between the 2 and 4 wheel drive mode. Synchronized type gears between "low" and "high"
Control method		Remote control with the gear shift lever on the floor.
Gear ratio: Transmission	1st	3.767
	2nd	2.248
	3rd	1.404
	4th	1.000
	5th	0.809
	Rev.	3.873
: Transfer	High	1.000
	low	2.283
Transmission oil capacity	lit. (US qt)	2.95 (3.12)
Transfer oil capacity	lit. (US qt)	1.45 (1.53)
Type of lubricant		Engine oil Refer to chart in Section 0

TORQUE SPECIFICATIONS

N·m (lb·ft)

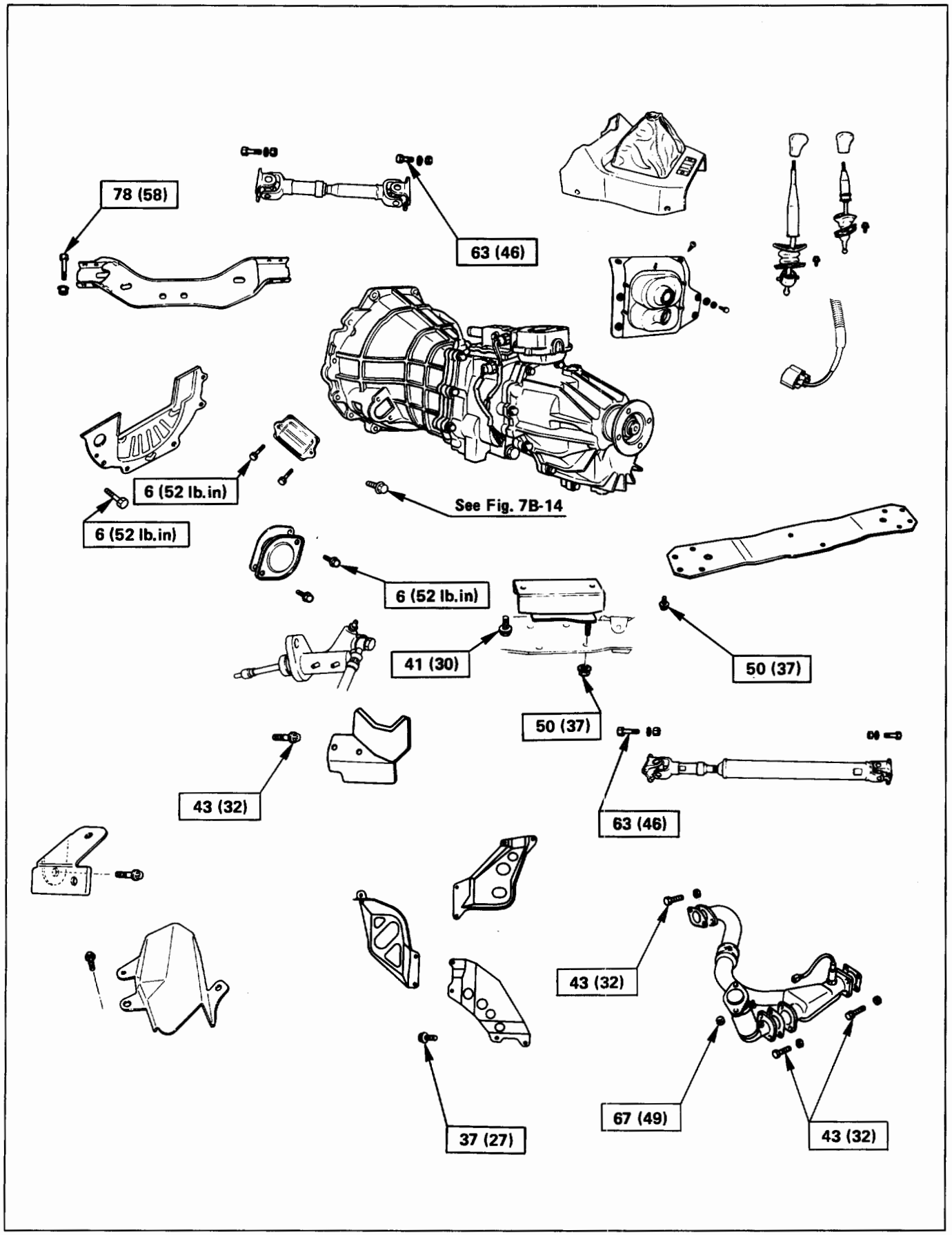

Fig. 7B-107

TORQUE SPECIFICATIONS (cont'd)

N·m (lb·ft)

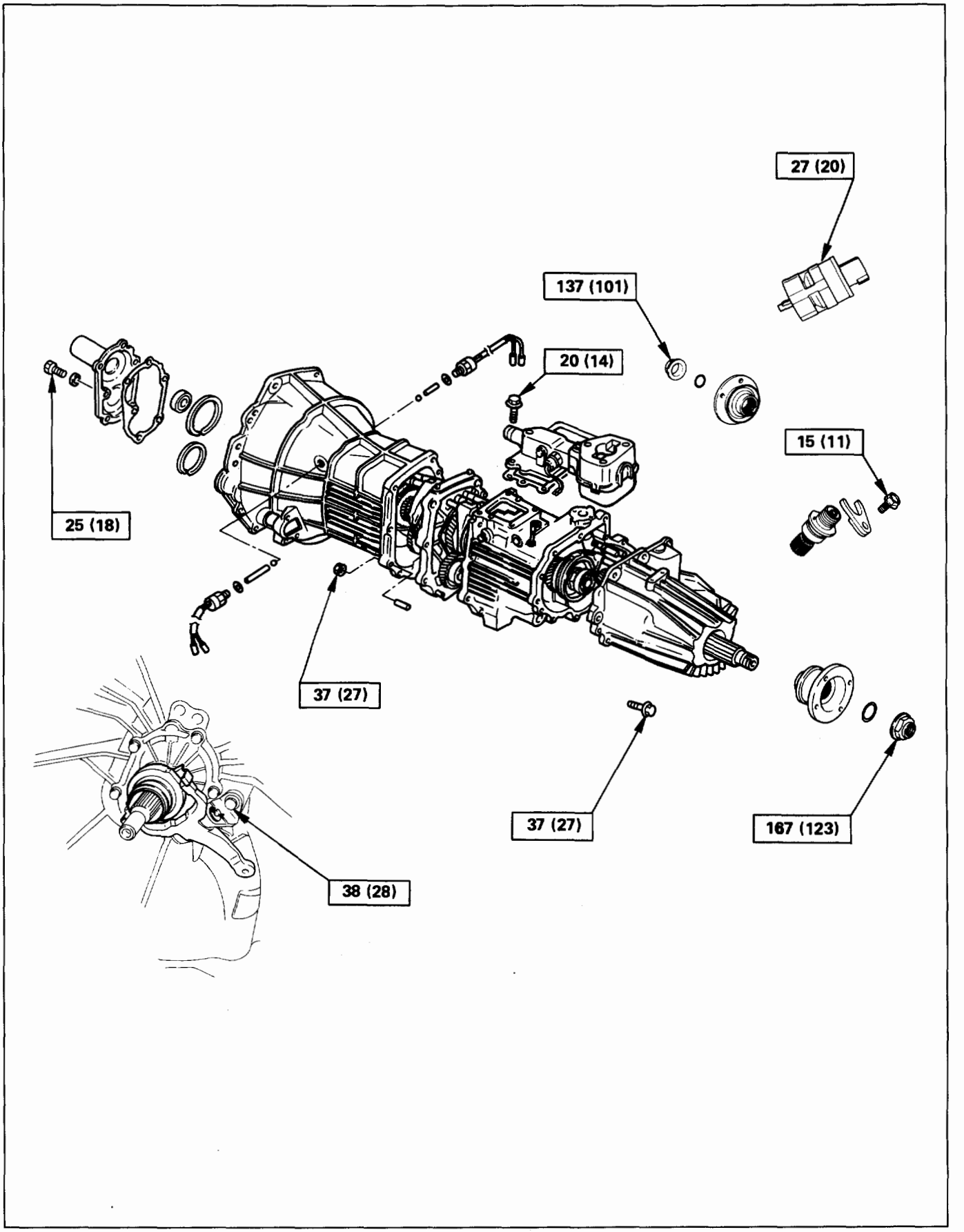

Fig. 7B-108

TORQUE SPECIFICATIONS (cont'd)

N·m (lb·ft)

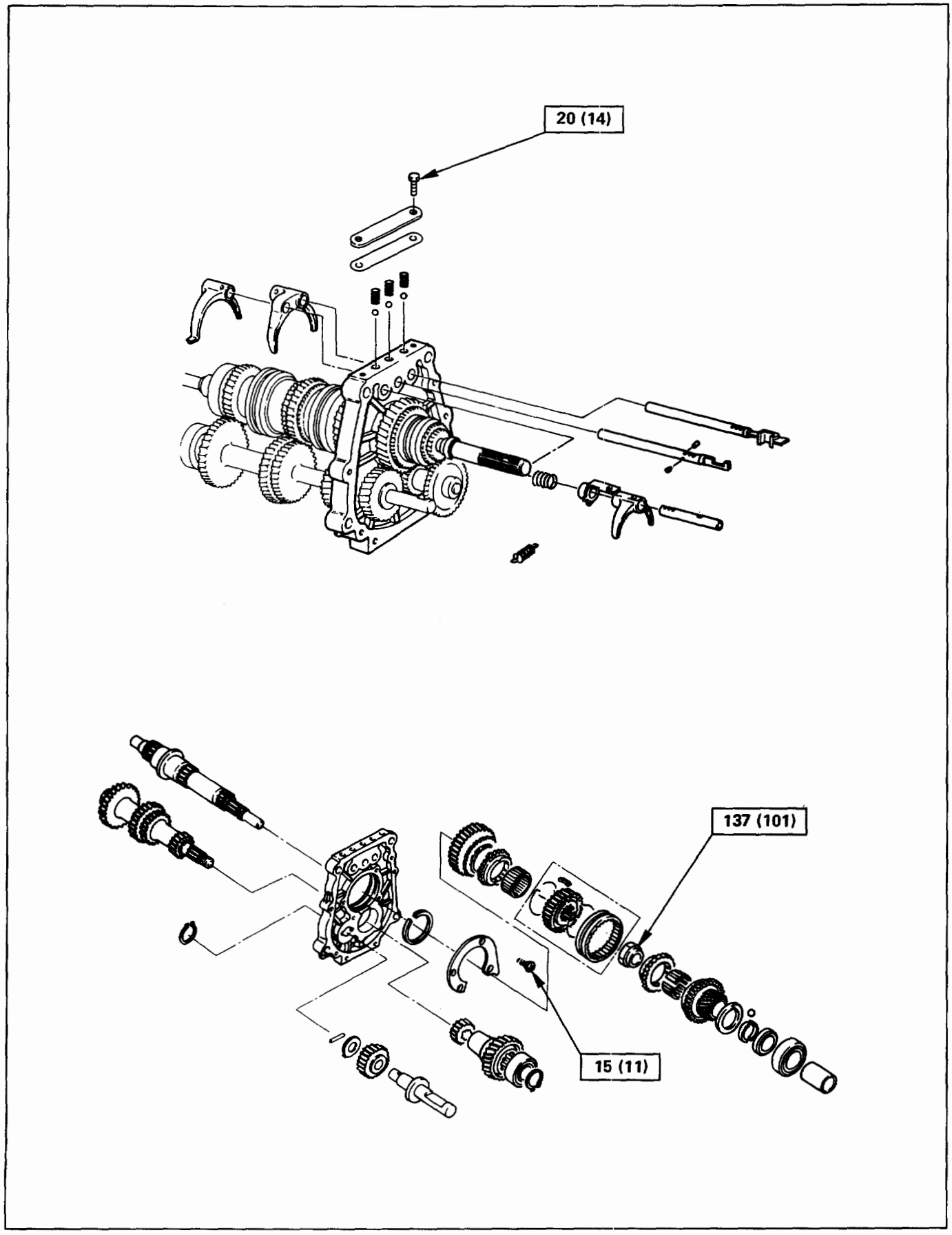

Fig. 7B-109

SPECIAL TOOLS

ILLUSTRATION	PART NO. PART NAME
	J-37222 Mainshaft collar remover
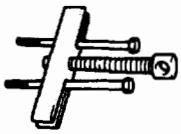	**J-8433** Puller
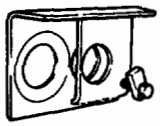	**J-37224** Holding fixture
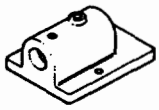	**J-3289-20** Holding fixture base
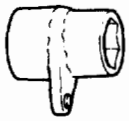	**J-37219** Wrench
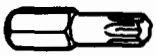	**J-37225** Torx bit wrench (T-45)
	J-37223 Mainshaft end bearing installer
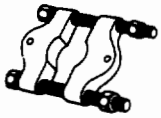	**J-22912-01** Bearing remover/installer
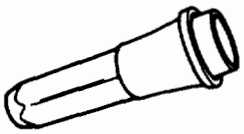	**J-29769** Front cover oil seal installer

ILLUSTRATION	PART NO. PART NAME
	J-6133-01 Mainshaft collar installer
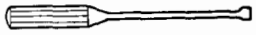	**J-39207** Remover: Clutch release bearing
	J-37221 Flange holder
	J-39209 Punch, end nut
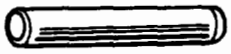	**J-35283** Counter shaft bearing installer

MEMO

SECTION 7C

CLUTCH

CAUTION:
When fasteners are removed, always reinstall them at the same location from which they were removed. If a fastener needs to be replaced, use the correct part number fastener for that application. If the correct part number fastener is not available, a fastener of equal size and strength (or stronger) may be used. Fasteners that are not reused, and those requiring thread locking compound, will be called out. The correct torque values must be used when installing fasteners that require torque. If the above conditions are not followed, parts or system damage could result.

CONTENTS

General Description 7C- 2
- **Clutch** 7C- 2
- **Master Cylinder** 7C- 3
- **Damper Cylinder** 7C- 3
- **Slave Cylinder** 7C- 3
- **Pressure Plate Assembly** 7C- 4
- **Driven Plate Assembly** 7C- 4

Diagnosis 7C- 5

On-Vehicle Service 7C- 6
- **Clutch Assembly** 7C- 6
- **Clutch Control** 7C-13
- **Master Cylinder** 7C-17
- **Slave Cylinder** 7C-18
- **Damper Cylinder** 7C-20

Main Data And Specifications 7C-21
- **General Specifications** 7C-21
- **Torque Specifications** 7C-22

Special Tools 7C-24

GENERAL DESCRIPTION

CLUTCH

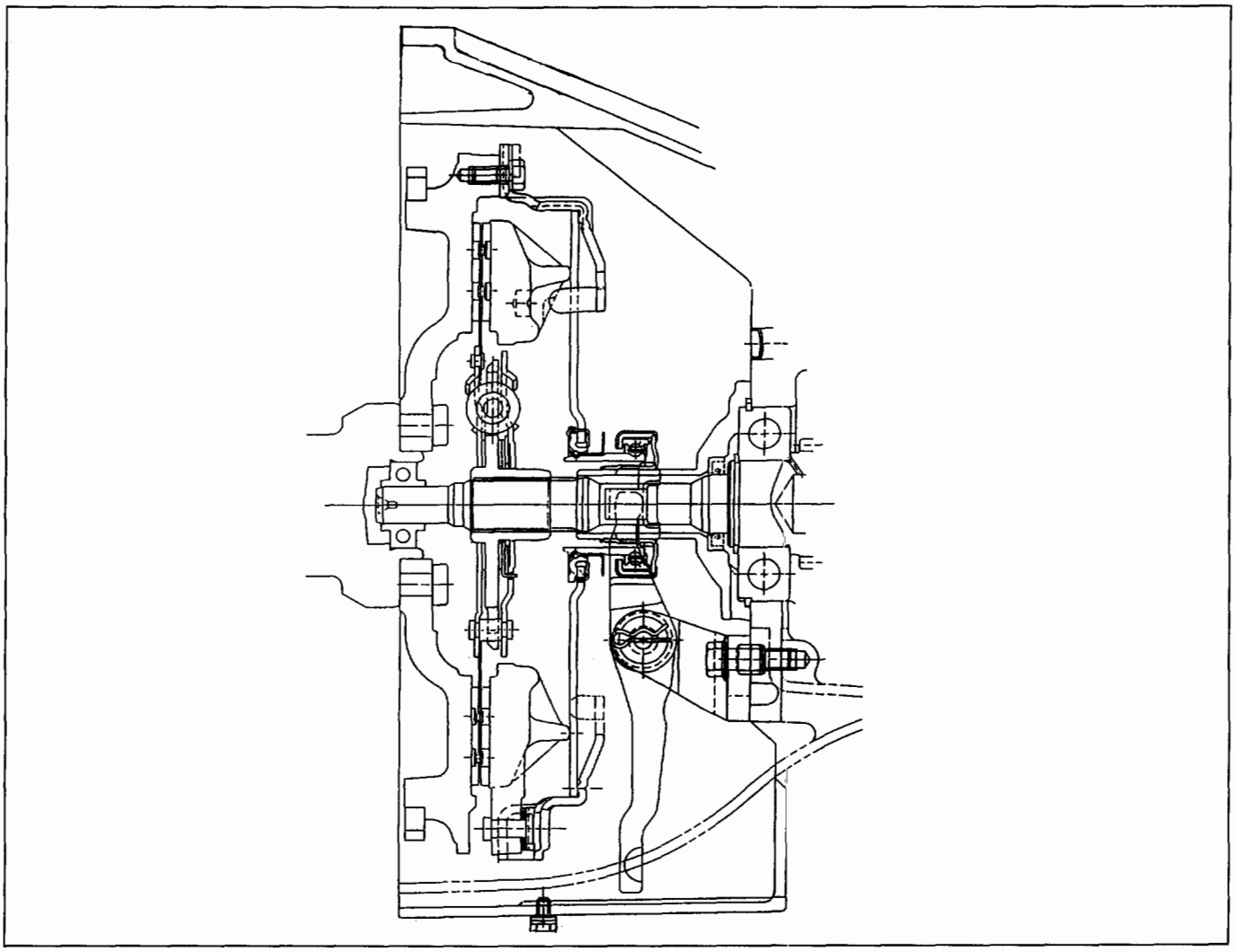

Fig. 7C-1

For 6VD1 (3.2L) engine model, the pull-type clutch is employed. The pull-type clutch is disengaged by pulling the release lever (release bearing) to disengage the pressure plate.

MASTER CYLINDER

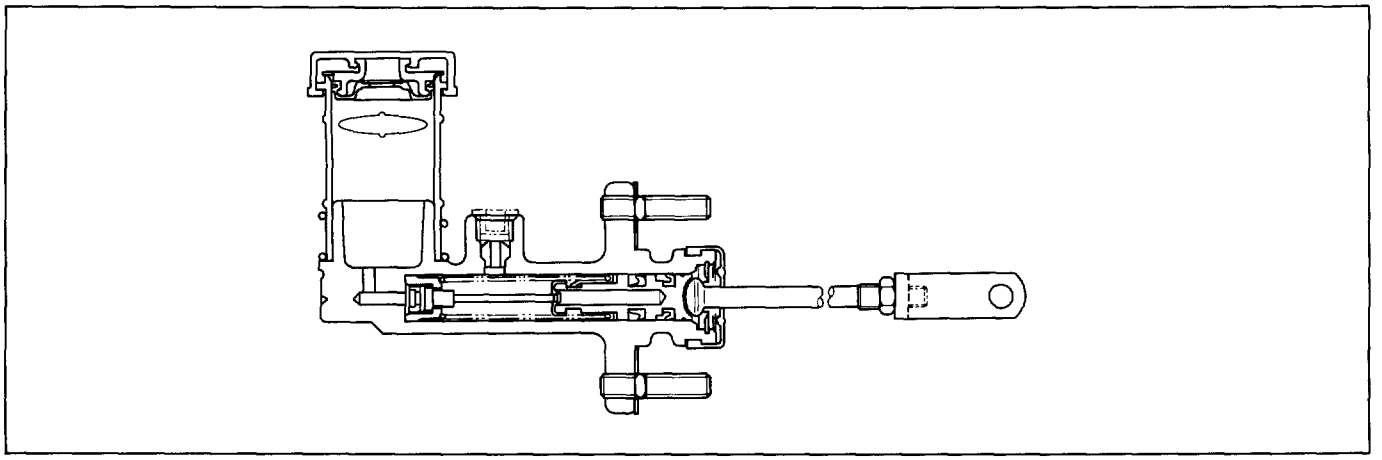

Fig. 7C-2

DAMPER CYLINDER

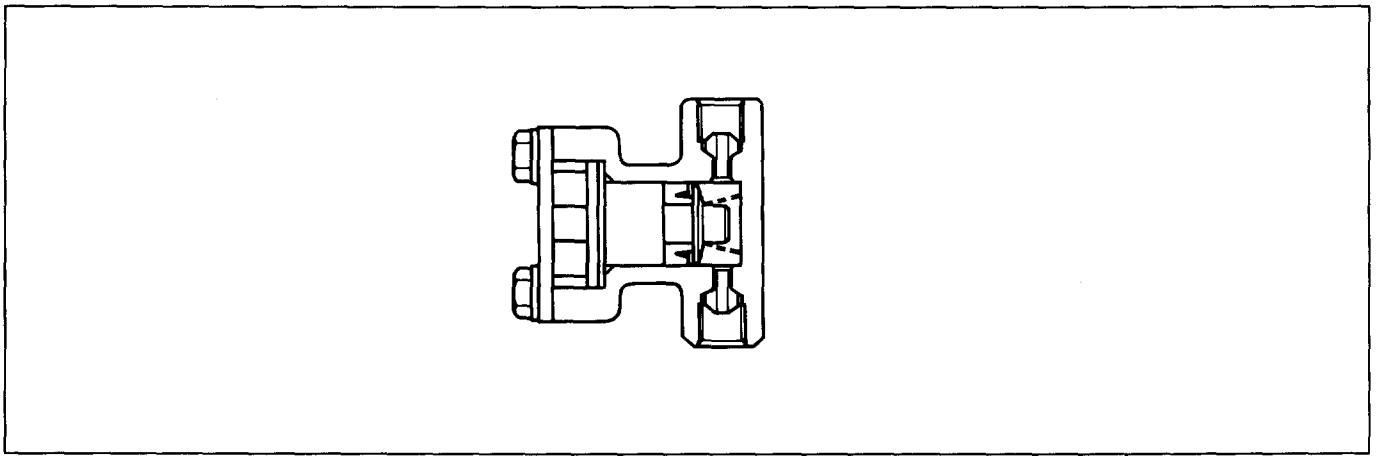

Fig. 7C-3

In order to reduce the occurrence of noises at the clutch hydraulic system, the damper cylinder is used in the clutch hydraulic line between the master cylinder and slave cylinder.

SLAVE CYLINDER

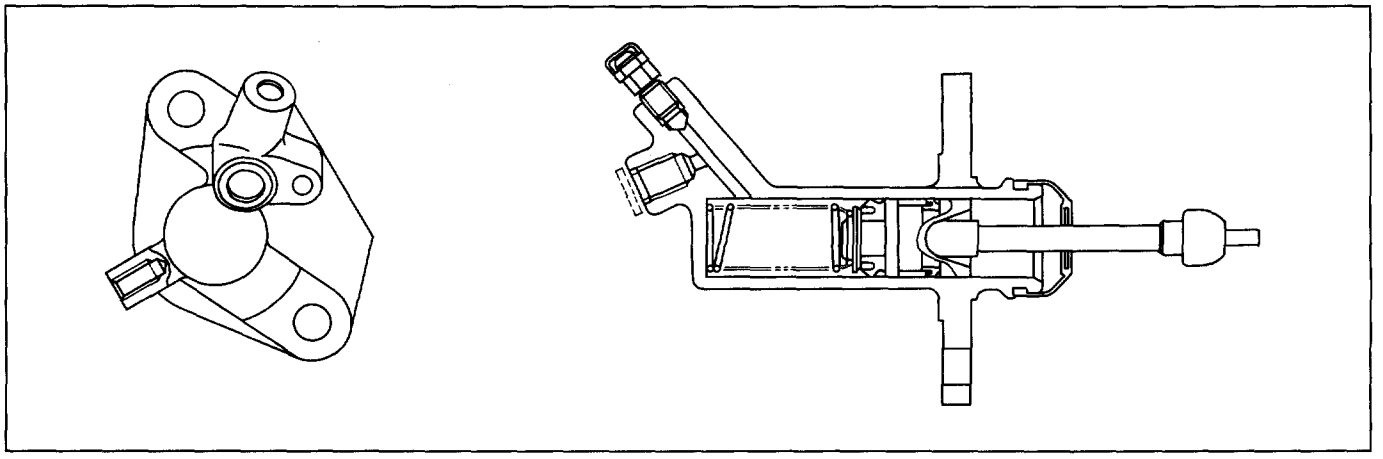

Fig. 7C-4

PRESSURE PLATE ASSEMBLY

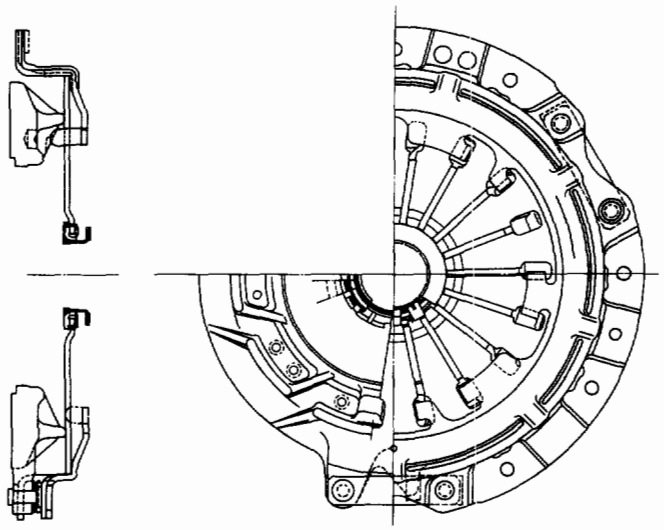

Fig. 7C-5

DRIVEN PLATE ASSEMBLY

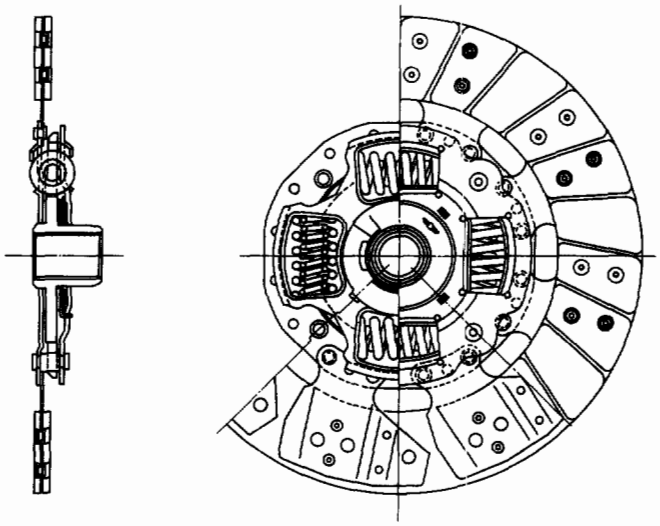

Fig. 7C-6

DIAGNOSIS

Problem	Possible cause	Correction
Dragging	• Fluid leakage. • Air in hydraulic line. • Master cylinder and slave cylinder seals worn. • Driven plate warped. • Diaphragm spring weakened or tip of fingers worn. • Driven plate sticking on splines. • Clutch spline worn. • Release bearing worn or damaged.	• Repair • Bleed • Replace seals. • Replace driven plate. • Replace pressure plate. • Lubricate with grease or replace. • Repair • Replace release bearing.
Slipping	• Driven plate facing worn or oil soaked. • Diaphragm spring weakened. • Pressure plate or flywheel warped. • Master cylinder and slave cylinder seals worn.	• Replace driven plate and check for leaks. • Replace pressure plate. • Correct or replace. • Replace seals.
Chattering	• Engine mounts loose or damaged. • Driven plate facing warped. • Surface of facing hardened. • Driven plate facing oil soaked. • Damper springs weakened or broken. • Pressure plate or flywheel warped.	• Tighten or replace. • Replace driven plate. • Replace driven plate • Replace driven plate and check for leaks. • Replace. • Correct or replace.
Noisy	• Replace bearing binding. • Replace bearing worn or damaged. • Release bearing poorly lubricated. • Pilot bearing worn. • Damper springs weakened or broken. • Rivets of driven plate exposed.	• Correct, or replace if damaged, and lubricate. • Replace release bearing. • Lubricate. • Replace pilot bearing. • Replace driven plate. • Replace driven plate.
Pedal is hard to push	• Hydraulic line blocked. • Master or slave cylinders binding.	• Clean out or replace. • Repair or replace as needed.

ON-VEHICLE SERVICE

CLUTCH ASSEMBLY

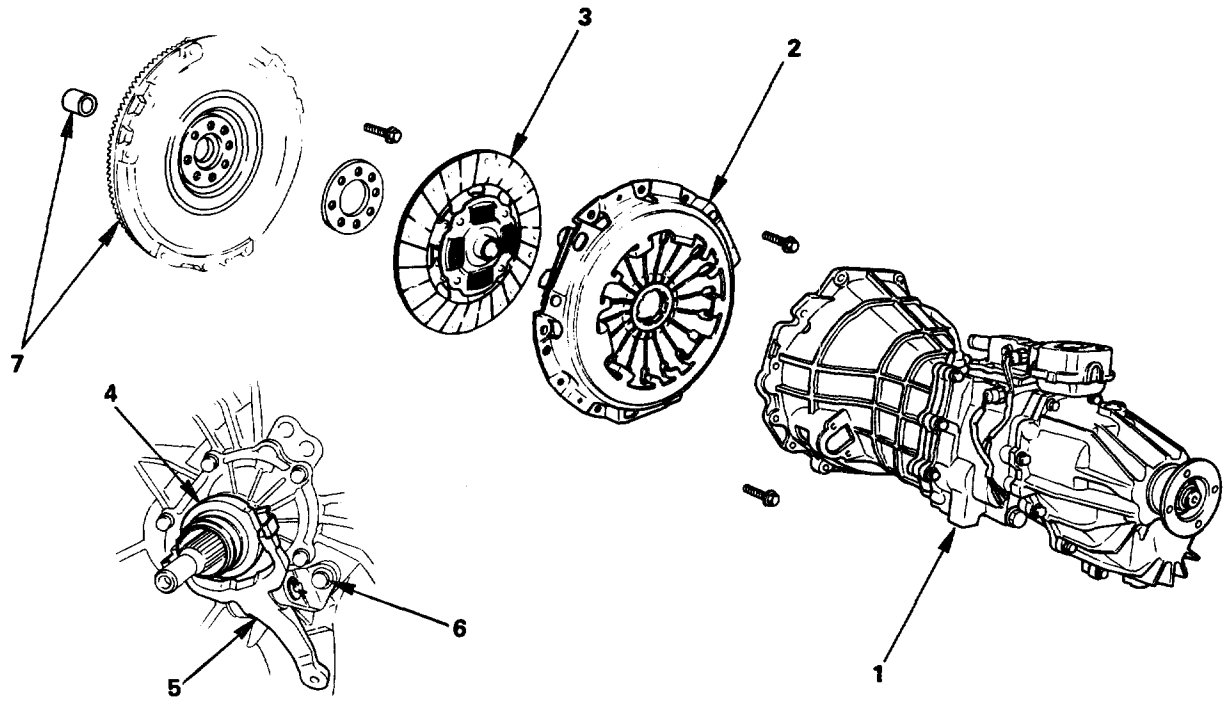

Removal steps
1. Transmission assembly
2. Pressure plate assembly
3. Driven plate assembly
4. Release bearing
5. Shift fork
6. Fulcrum bridge
7. Flywheel assembly and crankshaft bearing

Installation steps
To install, follow the removal steps in the reverse order.

Fig. 7C-7

REMOVAL

1. **Transmission assembly**
   Refer to "MANUAL TRANSMISSION" of Section 7B for "REMOVAL AND INSTALLATION" procedure.
2. **Pressure plate assembly**
3. **Driven plate assembly**
   - Use the pilot aligner to prevent the driven plate assembly from falling free (Fig. 7C-8).

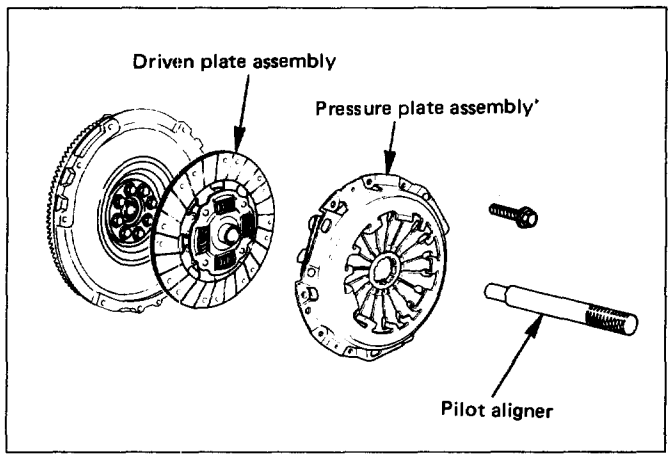

Fig. 7C-8

Pilot aligner: J-24547

- Mark the flywheel, clutch cover and pressure plate lug for alignment when installing.

4. **Release bearing**
   - Remove the release bearing from the transmission case (Fig. 7C-9).
5. **Shift fork**
   - Remove the snap pin.
   - Remove the shift fork pin and shift fork from the fulcrum bridge (Fig. 7C-10).

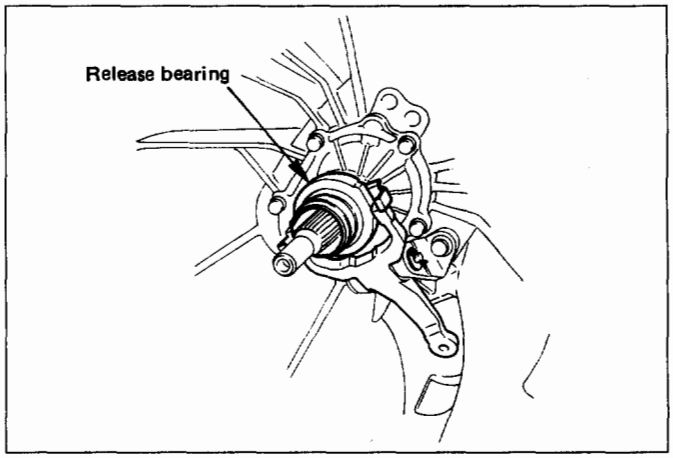

Fig. 7C-9

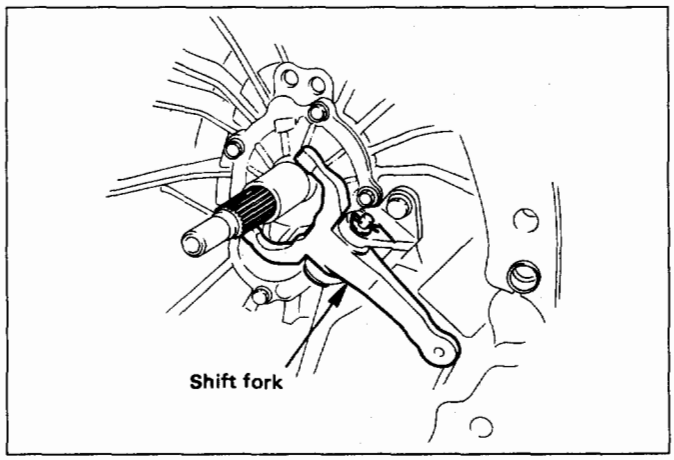

Fig. 7C-10

6. **Fulcrum bridge**
   - Remove the fulcrum bridge bolts.
   - Remove the fulcrum bridge from the transmission case (Fig. 7C-11).
7. **Flywheel assembly and crankshaft bearing**
   - Do not remove except for replacement.
   - Use the remover to remove the crankshaft bearing (Fig. 7C-12).

     Remover; J-5822
     Sliding hammer; J-23907

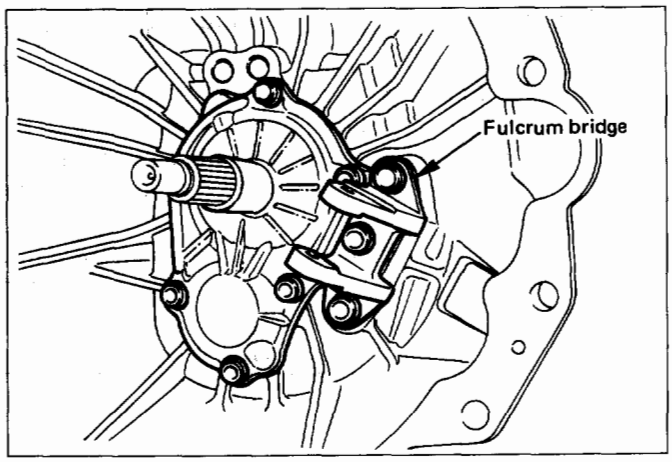

Fig. 7C-11

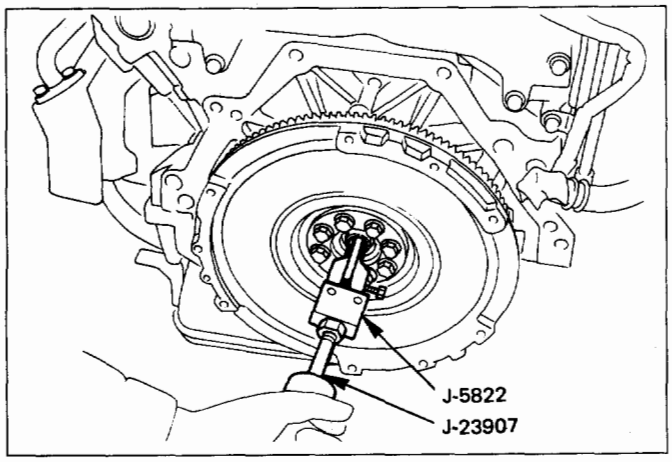

Fig. 7C-12

INSPECTION AND REPAIR

Make necessary correction or parts replacement if wear, damage, or any other abnormal condition are found through inspection.

Pressure plate assembly (Fig. 7C-13)

- Visually check the pressure plate friction surface for excessive wear and heat cracks. If excessive wear or deep heat cracks are present, the pressure plate must be replaced.

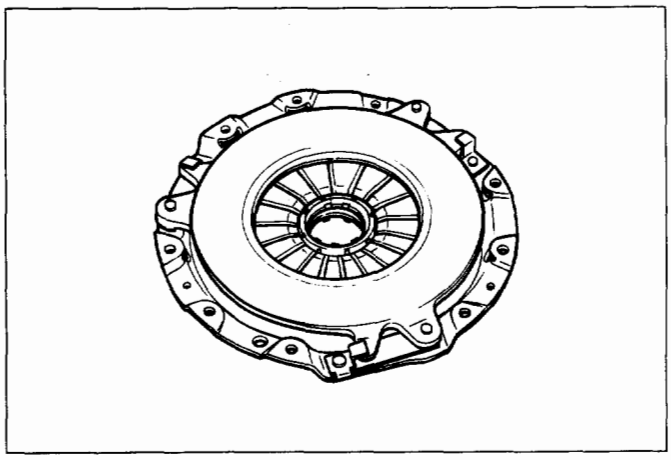

Fig. 7C-13

Pressure plate warpage (Fig. 7C-14)

- Use a straight edge and a feeler gauge to measure the pressure plate friction surface flatness in four directions.
  If any of the measured values exceeds the specified limit, the pressure plate must be replaced.

Pressure plate warpage	mm (in)
Limit	
0.3 (0.012)	

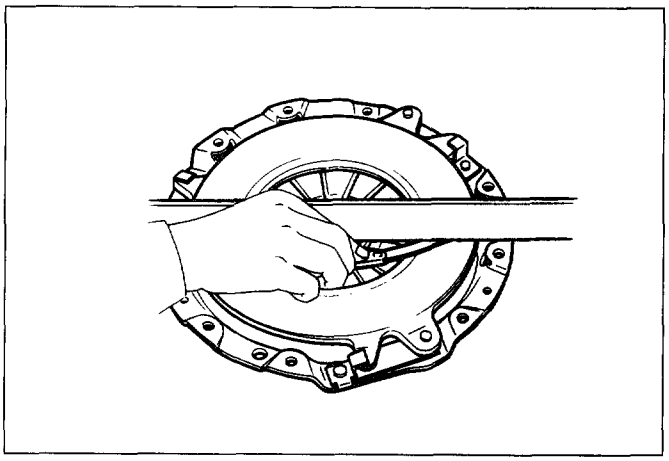

Fig. 7C-14

Clutch cover (Fig. 7C-15)

- Visually check the entire clutch cover for excessive wear, cracking, and other damage. The clutch cover must be replaced if any of these conditions are present.

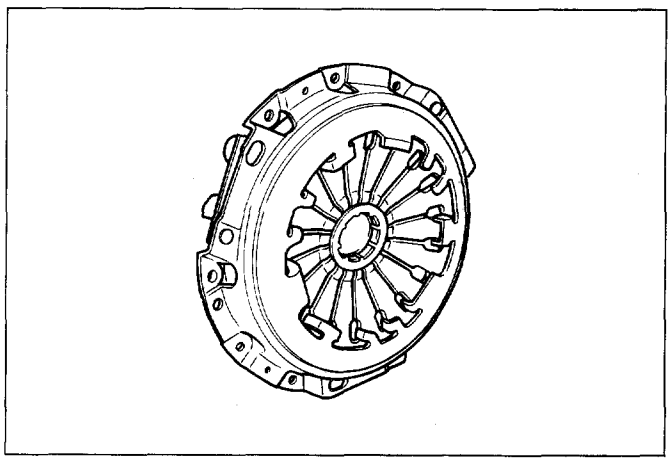

Fig. 7C-15

Clutch set force (Fig. 7C-16)

1. Invert the pressure plate assembly.
2. Place a new driven plate over the pressure plate.
   A metal sheet with Ⓐ thickness of 8.0 mm (0.315 in) may be used in place of the driven plate.
3. Compress the pressure plate assembly until the distance Ⓑ becomes 12 mm (0.472 in).
4. Note the pressure gauge reading.
   If the measured value is less than the specified limit, the pressure plate assembly must be replaced.

Clutch set force	N (lb)
Standard	Limit
7208 (1621)	6669 (1499)

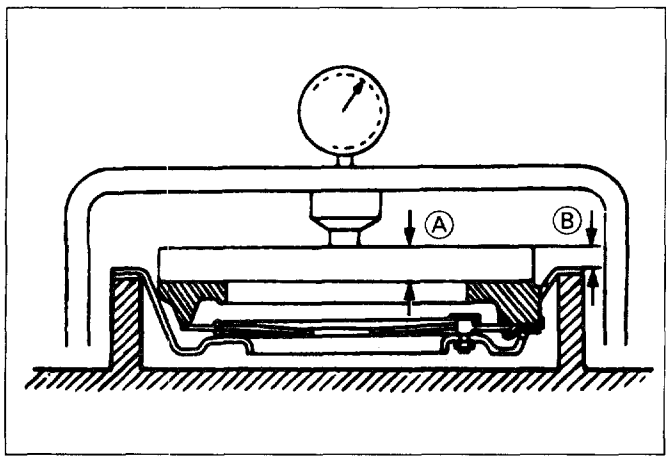

Fig. 7C-16

Diaphragm spring finger height (Fig. 7C-17)

1. Place a new driven plate or a 8.0 mm (0.315 in) spacer beneath the pressure plate.
2. Fully compress the pressure plate and diaphragm spring.
   There are two ways to do this.
   a. Use a bench press to press down on the assembly from the top.
   b. Tighten the fixing bolts.

NOTE:
Pre-Load on diaphragm spring finger must be 49-98N (11-22 lb) in direction of release, when clutch cover assembly is bolted to the flywheel.

3. Measure the spring height from base to spring tip Ⓐ.
   If the measured value exceeds the specified limit, the pressure plate assembly must be replaced.

Spring finger height	mm (in)
Standard	
49.9 - 51.9 (1.965 - 2.043))	

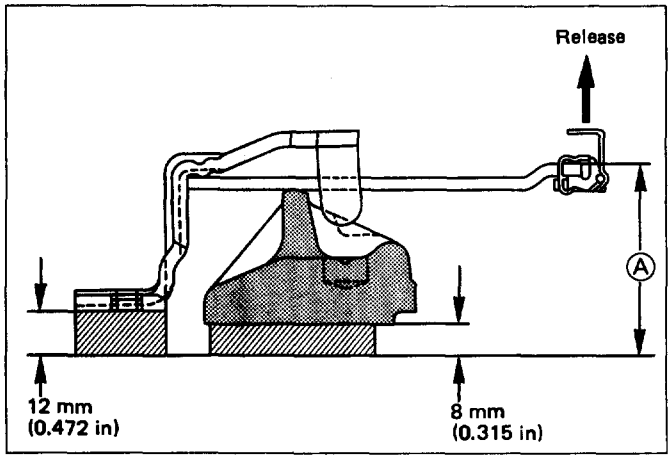

Fig. 7C-17

Driven plate assembly (Fig. 7C-18)

- Visually check the torsion spring for looseness, breakage, and weakening.
  If any of these conditions are discovered, the driven plate assembly must be replaced.
- Visually check the facing surfaces for cracking and excessive scorching.
  Visually inspect the facing surfaces for the presence of oil or grease.
  If any of these conditions are discovered, the facing must be cleaned or replaced.
- Check that the driven plate moves smoothly on the transmission top gear shaft spline.
  Minor ridges on the top gear shaft spline may be removed with an oil stone.

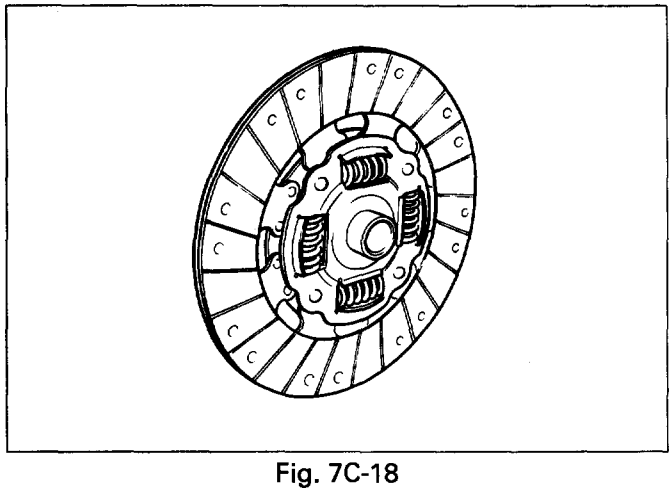

Fig. 7C-18

Driven plate warpage (Fig. 7C-19)

1. Insert the clutch pilot aligner into the driven plate splined hub.
   The clutch pilot aligner must be held perfectly horizontal.
   Clutch pilot aligner; J-24547
2. Set a dial indicator to the driven plate outside circumference.
3. Slowly turn the driven plate.
   Read the dial indicator as you turn the driven plate.
   If the measured value exceeds the specified limit, the driven plate assembly must be replaced.

Driven plate warpage mm (in)

Standard	Limit
0.7 (0.028)	1.0 (0.039)

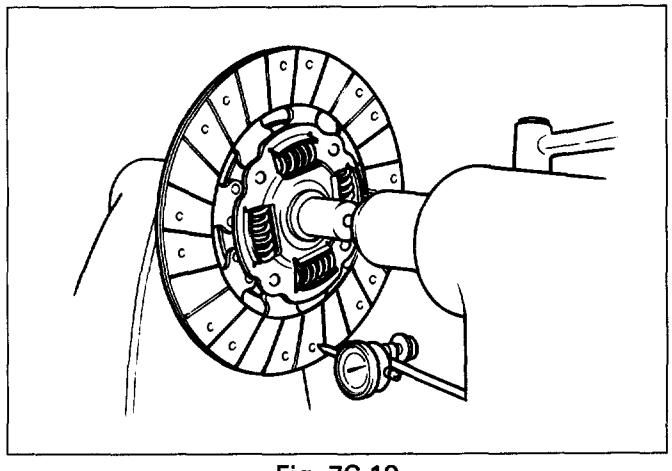

Fig. 7C-19

Driven plate splined hub spline wear (Fig. 7C-20)

1. Clean the driven plate splined hub.
2. Install the driven plate to the transmission top gear shaft spline.
3. Set a surface gauge to the driven plate outside circumference.
4. Slowly turn the driven plate counterclockwise.
   Measure the spline rotation play as you turn the driven plate.
   If the measured value exceeds the specified limit, the driven plate assembly must be replaced.

Driven plate splined hub spline wear mm (in)

Standard	Limit
0.5 (0.020)	1.0 (0.039)

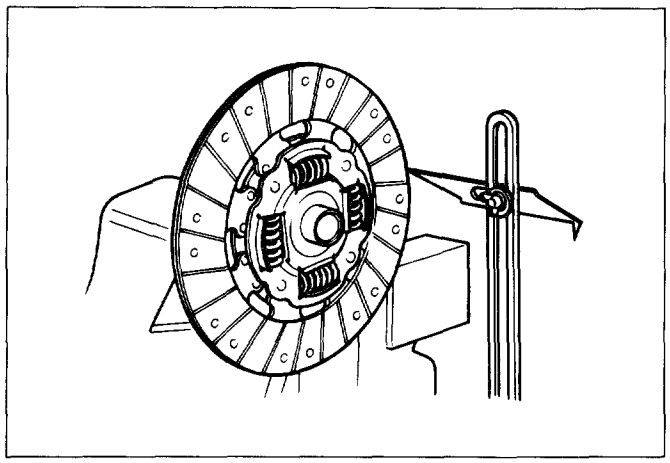

Fig. 7C-20

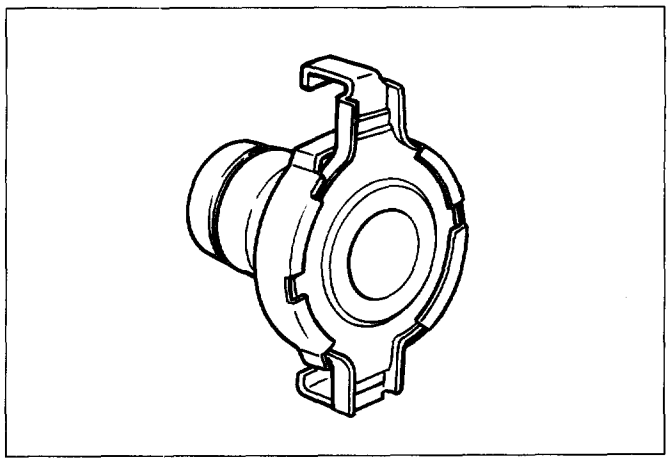

Fig. 7C-22

Rivet head depression (Fig. 7C-21)

- Use a depth gauge or a straight edge with steel rule to measure the rivet head depression ① from the facing surface ②.
- Be sure to measure the rivet head depression on both sides of the driven plate.
  If the measured value is less than the specified limit, the driven plate assembly must be replaced.

Rivet head depression mm (in)

Standard	Limit
1.6 (0.063)	0.2 (0.008)

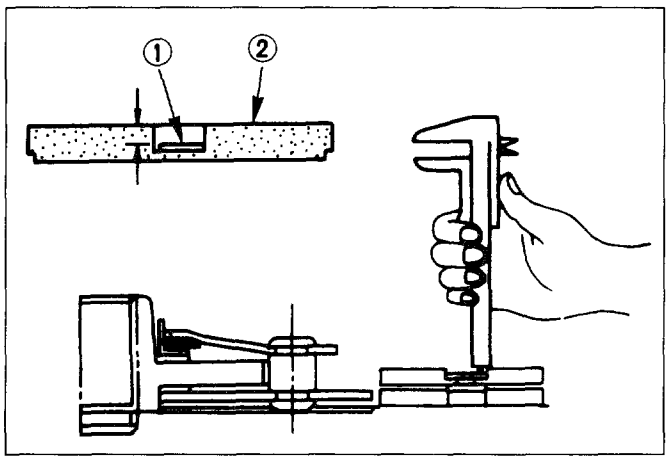

Fig. 7C-21

Release bearing (Fig. 7C-22)

- Visually check the release bearing for excessive play, noise and breakage.
  If any of these conditions are discovered, the release bearing must be replaced.
- When replacing the release bearing, replace both the wedge collar and wire ring at the same time (Fig. 7C-22a).

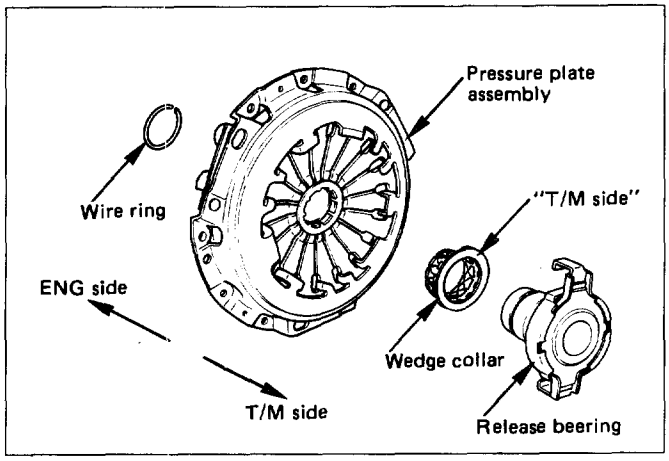

Fig. 7C-22a

Wedge collar (Fig. 7C-22b)

- Visually check the surfaces of the wedge collar making contact with the release bearing for excessive wear and damage.
- Replace any exhibiting excessive wear or damage.

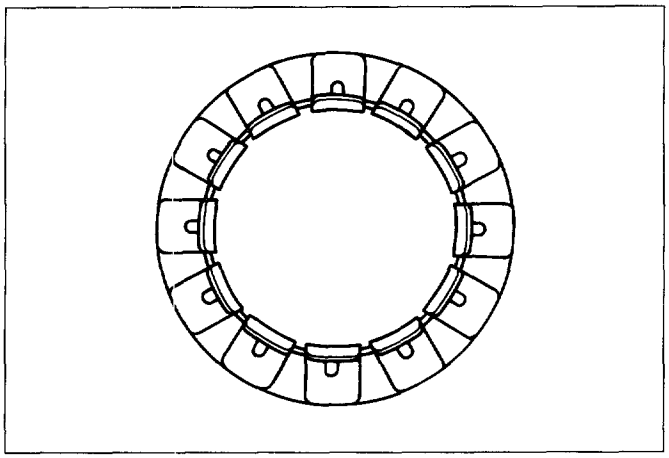

Fig. 7C-22b

Shift fork (Fig. 7C-23)

- Visually check the surfaces of the shift fork making contact with the release bearing for excessive wear and damage.
- Remove any minor stepping or abrasion from shift fork with an oil stone.
  Replace any exhibiting excessive wear or damage.

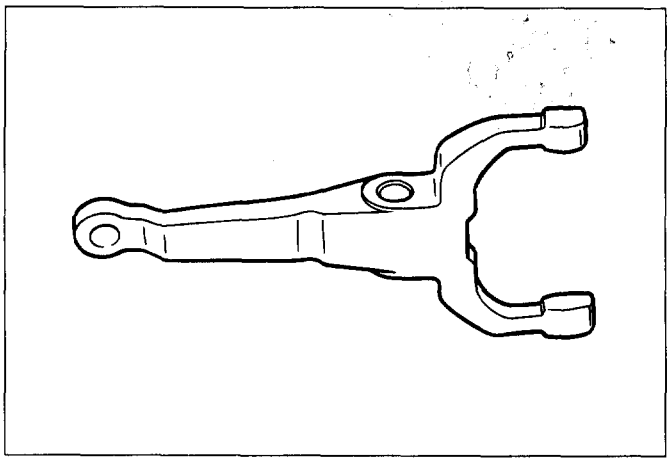

Fig. 7C-23

INSTALLATION

To install, follow the removal steps in the reverse order, noting the following points:

7. Flywheel assembly and crankshaft bearing

- Clean and lubricate with grease.
- Use the installer to install the crankshaft bearing (Fig. 7C-24).
  Installer: J-26516-A
  Driver handle: J-8092

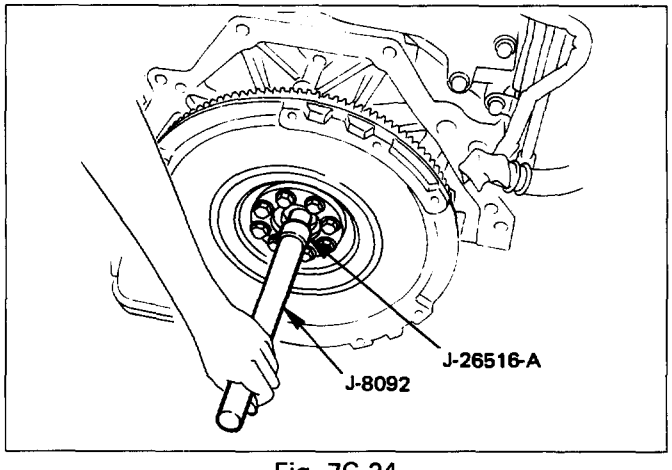

Fig. 7C-24

- **Bolts: flywheel fixing (Fig. 7C-25)**
- Install new bolts in the order illustrated and tighten them to the specified torque.

Torque N·m (lb·ft)	54 (40)

NOTE:
- Do not reuse the bolt.
- Do not apply oil or thread lock to the bolt.

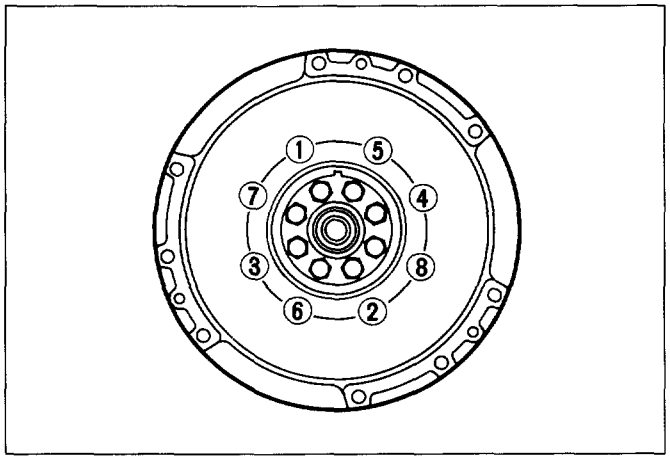

Fig. 7C-25

6. Fulcrum bridge (Fig. 7C-26)

- Install the fulcrum bridge to the transmission case.
- Tighten three fulcrum bridge bolts to the specified torque.

Torque N·m (lb·ft)	38 (28)

5. Shift fork (Fig. 7C-27)

- Apply molybednum disulfide contained type grease to the pin hole inner circumferences and thrust surfaces.
- Attach the shift fork to the fulcrum bridge and insert the pin from below of the fulcrum bridge.
- Install the washer and snap pin.

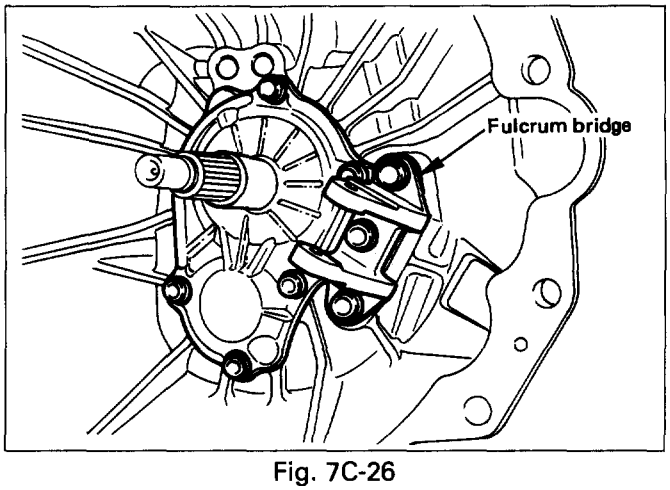

Fig. 7C-26

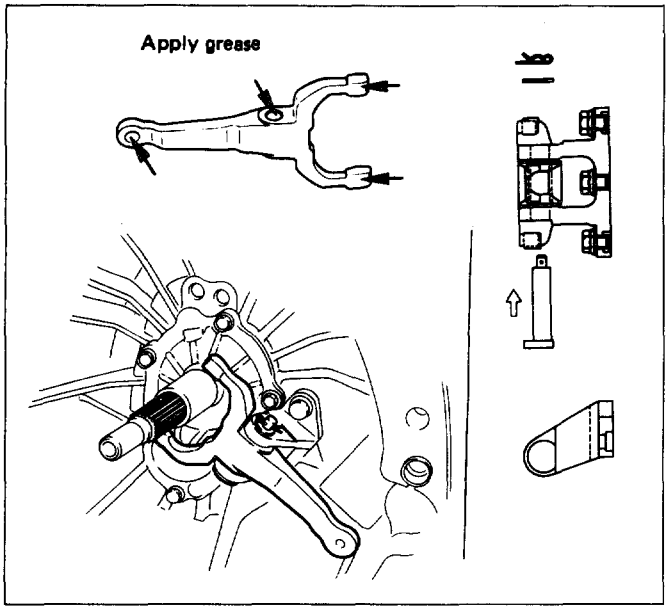

Fig. 7C-27

4. Release bearing

- Apply molybdenum disulfide contained type grease to the areas shown in Fig. 7C-28.
- Install the release bearing to the in the proper direction (Fig. 7C-29).

NOTE:
Ensure release bearing is properly positioned during installation, as shown in Fig. 7B-29.

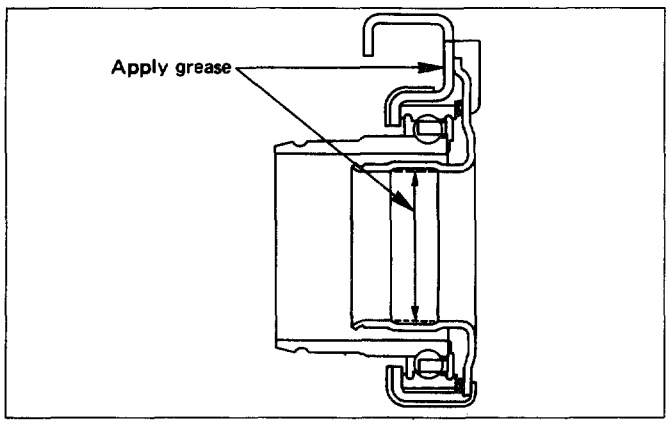

Fig. 7C-28

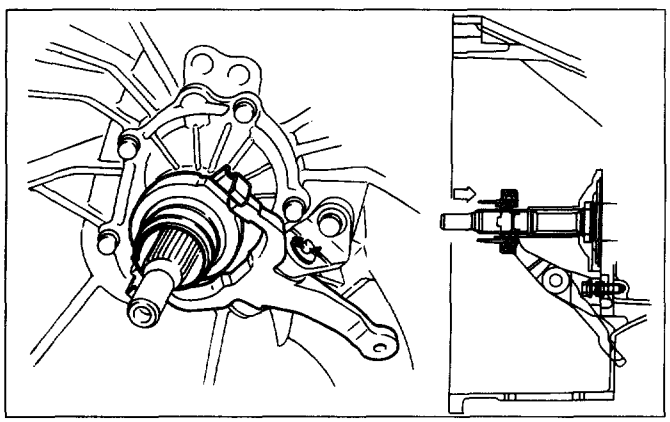

Fig. 7C-29

3. Driven plate assembly

- Use the pilot aligner to install the driven plate assembly (Fig. 7C-30).
  Pilot aligner; J-24547

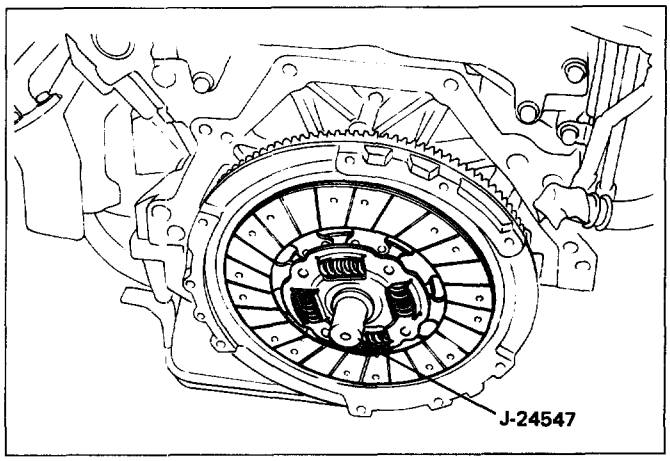

Fig. 7C-30

2. Pressure plate assembly

- Tighten the bolts holding the pressure plate assembly in the order shown in Fig. 7C-31.

Torque N·m (lb·ft)	18 (13)

- Remove the aligner.

NOTE:
Do not strike the aligner with a hammer to remove it.

1. Transmission assembly

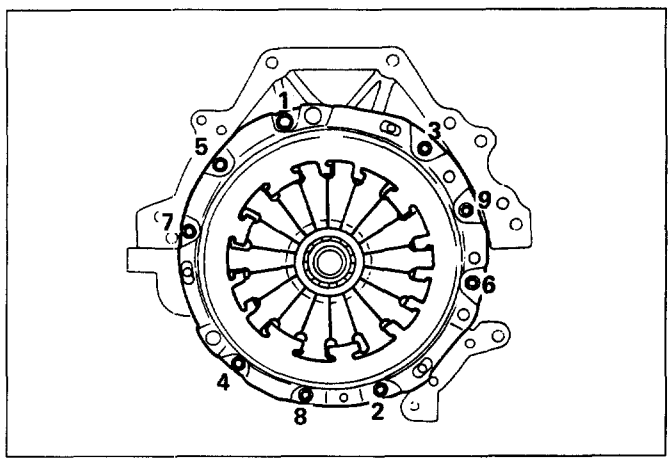

Fig. 7C-31

CLUTCH CONTROL

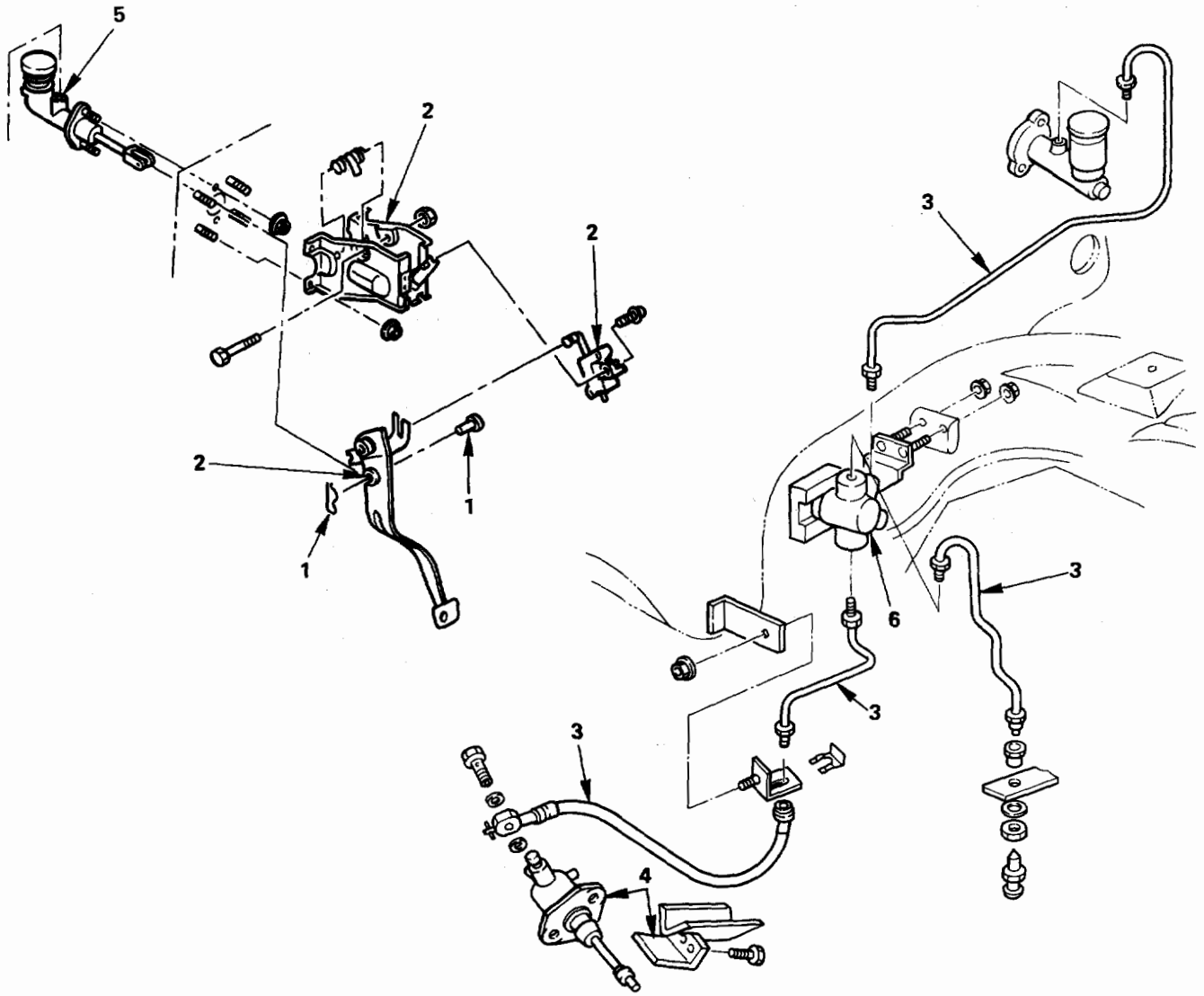

Removal steps

1. Pin & Jaw joint pin
2. Pedal assembly and switch
3. Oil line pipe
4. Slave cylinder assembly and heat protector
5. Master cylinder assembly
6. Damper cylinder assembly

Installation steps

To install, follow the removal steps in the reverse order.

Fig. 7C-32

REMOVAL

1. **Pin and jaw joint pin**
2. **Pedal assembly and switch**
3. **Oil line pipe**
4. **Slave cylinder assembly and heat protector**
5. **Master cylinder assembly**
6. **Damper cylinder assembly**

INSPECTION AND REPAIR

Make necessary adjustments, repairs, and part replacement if wear, damage or other problems are discovered during inspection.

INSTALLATION

To install, follow the removal steps in the reverse order, noting the following points:

1. **Clutch pedal adjustment**
   (1) With clutch switch (Fig. 7C-33)
   - Disconnect clutch switch connector.
   - Loosen lock nut, then turn switch out until there is a gap between the switch plunger and clutch pedal.

   (2) Loosen clutch master cylinder push rod lock nut. Turn push rod by hand to set clutch pedal height (H_2) to within specification (Fig. 7C-34).

Clutch pedal height (H_2)	mm (in)
218.5 – 228.5 (8.602 – 8.996)	

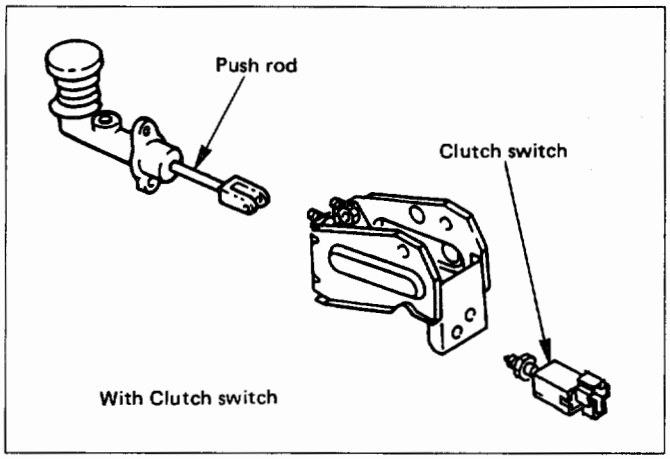

Fig. 7C-33

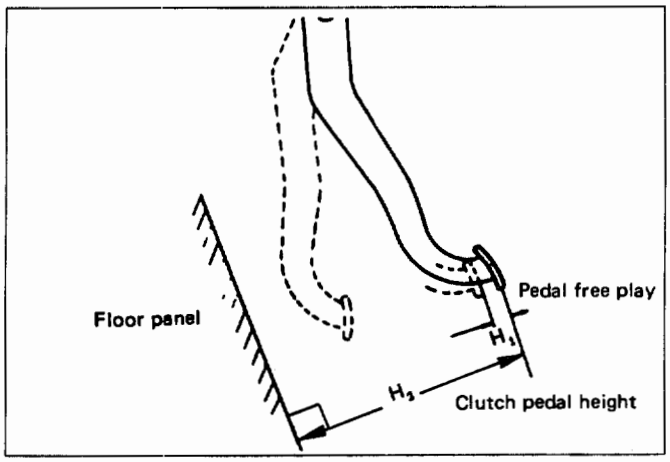

Fig. 7C-34

   (3) Tighten push rod lock nut.

   (4) With clutch switch
   - Turn the clutch switch until the switch bolt just touches the clutch pedal arm (Fig. 7C-35).
   - Adjust clutch switch by backing it out half a turn, and measure the clearance (δ) betweeen the clutch pedal arm and the clutch switch (Fig. 7C-36).
   - Lock the lock nut.
   - Connect clutch switch connector.

Clutch switch and clutch pedal clearance (δ)	mm (in)
0.5 – 1.5 (0.020 – 0.059)	

   (5) After adjusting the clutch pedal height, push the clutch pedal by hand rightly to check the clutch pedal free play (H_1) to within specification (Fig. 7C-34).

Pedal free play (H_1)	mm (in)
5 – 15 (0.20 – 0.59)	

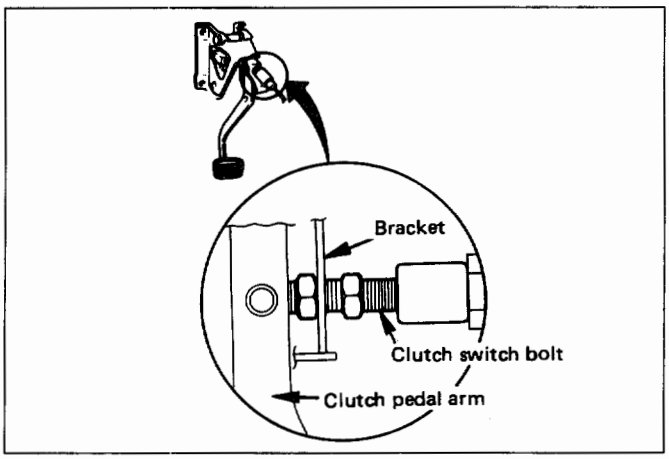

Fig. 7C-35

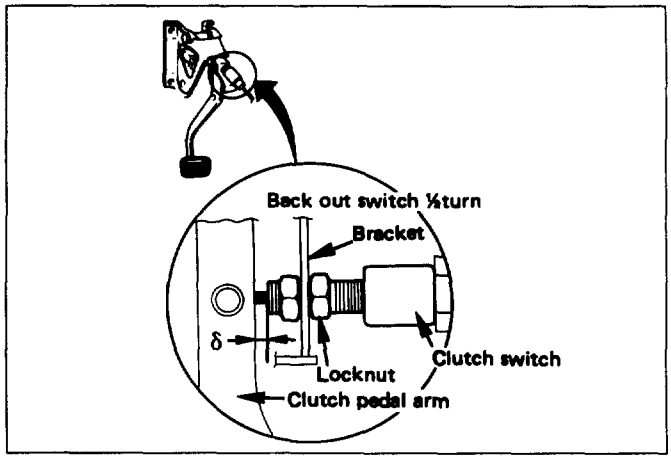

Fig. 7C-36

(6) Clutch pedal engagement height inspection (Fig. 7C-37)
  ① Operate the parking brake lever and block the wheels.
  ② Start the engine, fully step on the clutch pedal, and move the shift lever to 1st position.
  ③ With the engine idling, release the clutch pedal slowly and measure its stroke — just prior to its clutching position.

Clutch pedal engagement height (H_3) mm (in)
MIN. 30 (1.18)

If the measured value exceeds the specified limit, check the following points. Repair if necessary.
- Hydraulic circuit for fluid leakage or air in circuit.
- Clutch disc warped.
- Diaphragm spring weakened or tip of fingers worn.
- Driven plate sticking on sprines.
- Release bearing worn or damaged.
- Master cylinder and slave cylinder worn.

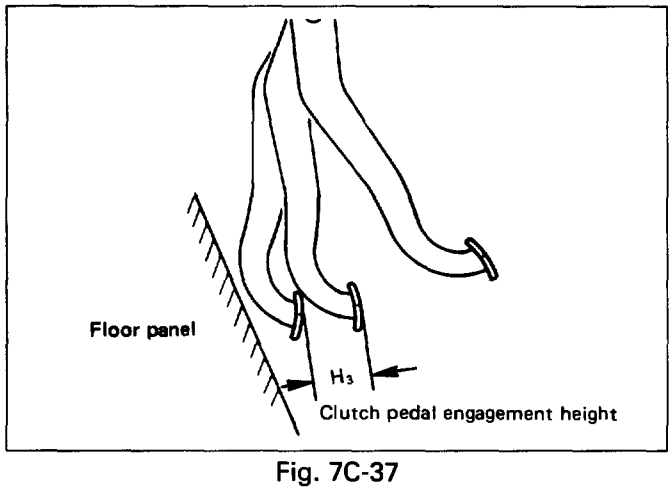

Fig. 7C-37

2. Torque

	N·m (lb·ft)
Master cylinder to dash panel	16 (12)
Clutch pedal to dash panel	21 (15)
Master cylinder push rod to yoke	17 (12)
Clutch pipe to master cylinder	20 (14)
Clutch pipe to damper cylinder	12 (104 lb·in)
Clutch pipe to flex, hose	20 (14)
Slave cylinder to case	43 (32)
Slave cylinder bleeder screw	8 (69 lb·in)
Clutch pipe to slave cylinder	20 (14)
Damper cylinder bleeder union nut	49 (36)
Damper cylinder bleeder pipe	15 (11)
Damper cylinder bleeder screw	8 (69 lb·in)

3. Bleeding

(1) Check the level of clutch fluid in the reservoir and replenish if necessary (Fig. 7C-38).

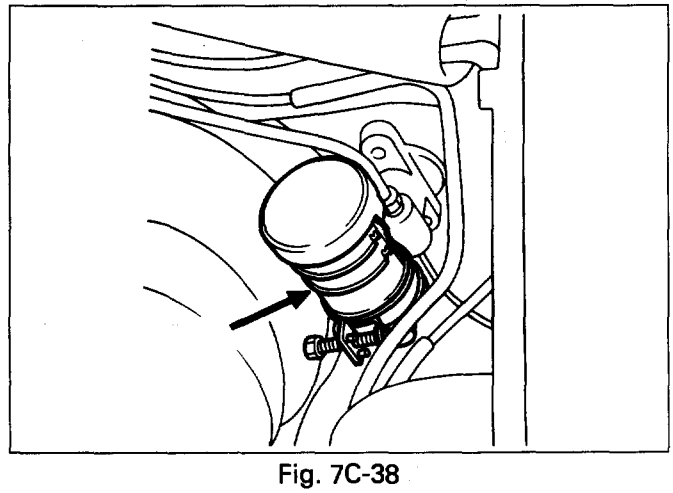

Fig. 7C-38

Bleeding the damper cylinder (Fig. 7C-39)

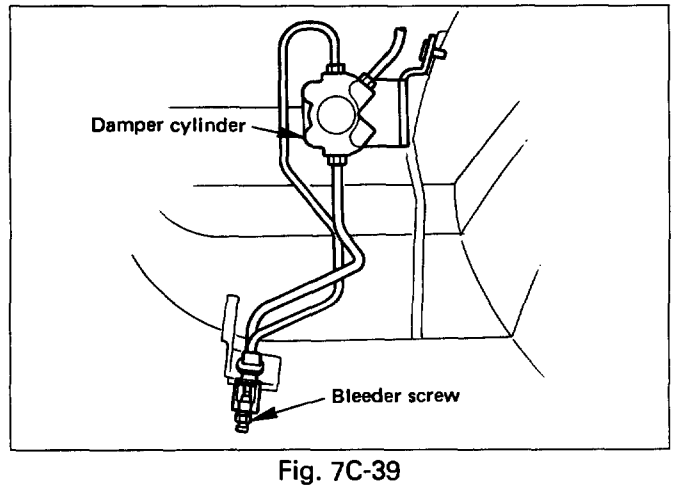

Fig. 7C-39

(2) Remove the rubber cap from the bleeder screw and wipe clean the bleeder screw. Connect a vinyl tube to the bleeder screw and insert the other end of the vinyl tube into a transparent container.
(3) Pump the clutch pedal repeatedly and hold it depressed (Fig. 7C-40).

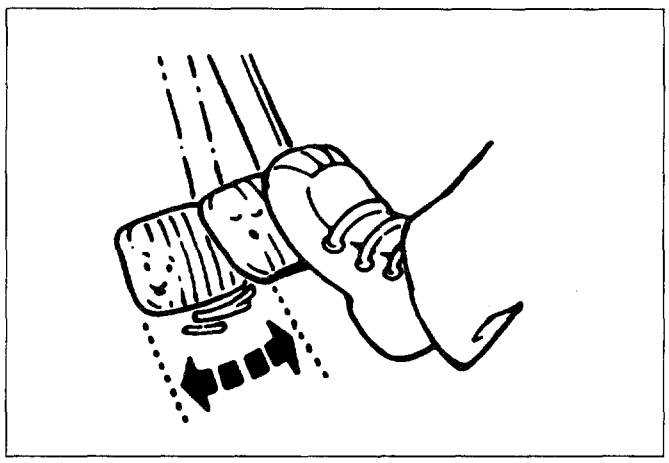

Fig. 7C-40

(4) Loosen the bleeder screw to release clutch fluid with air bubbles into the container, then tighten the bleeder screw immediately.
(5) Release the clutch pedal carefully. Repeat the above operation until air bubbles disappear from the clutch fluid being pumped out into the container. During the bleeding operation, keep the clutch fluid reservoir filled to the specified level. Reinstall the rubber cap.

Bleeding the slave cylinder (Fig. 7C-41)

(6) Repeat steps (2) through (5) for bleeding the slave cylinder.

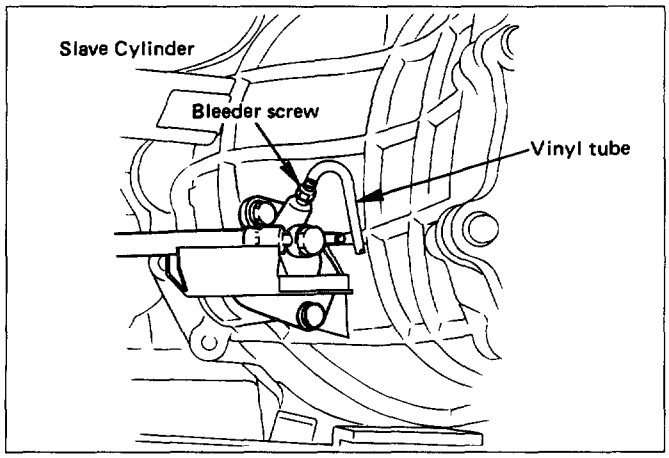

Fig. 7C-41

MASTER CYLINDER

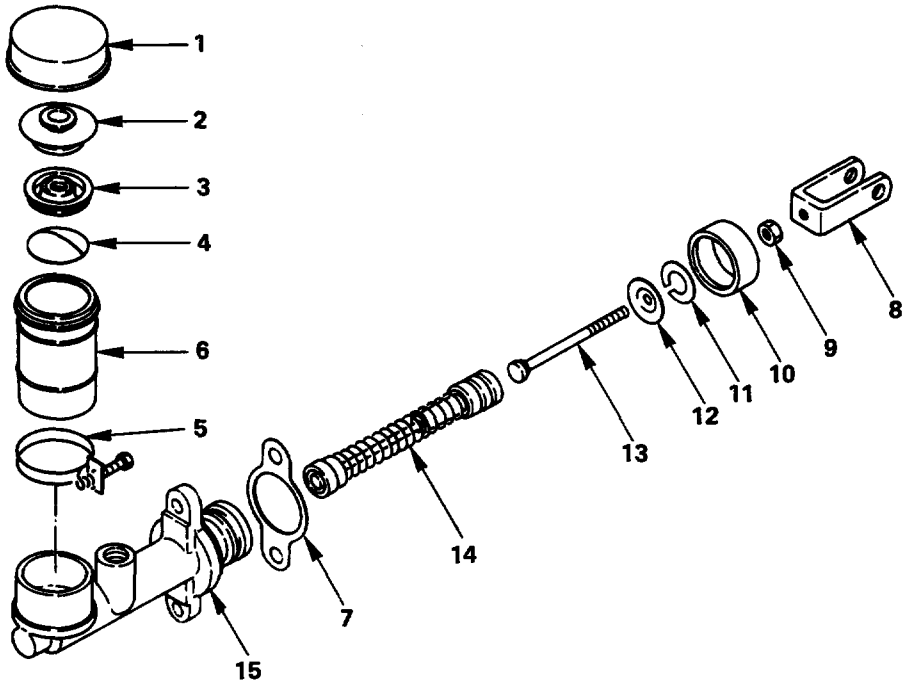

Disassembly steps
1. Reservoir cup
2. Inner cup
3. Seal
4. Float
5. Clip
6. Reservoir
7. Gasket
8. Yoke
9. Nut
10. Boot
11. Snap ring
12. Plate
13. Push rod
14. Piston assembly
15. Cylinder body

Reassembly steps
To reassemble, follow the disassembly steps in the reverse order.

Fig. 7C-42

DISASSEMBLY

1. **Reservoir cup**
2. **Inner cup**
3. **Seal**
4. **Float**
5. **Clip**
6. **Reservoir**
7. **Gasket**
8. **Yoke**
9. **Nut**
10. **Boot**
11. **Snap ring**
12. **Plate**
13. **Push rod**
14. **Piston assembly**
15. **Cylinder body**

INSPECTION AND REPAIR

Make the necessary adjustments, repair, and part replacements if excessive wear or damage is discovered during inspection.

Cylinder body
- Clean the cylinder body.
- Check the fluid return port for restrictions and clean it if necessary.

Inner parts
- Visually inspect the disassembled parts for excessive wear and damage.
  Replace the inner parts with new parts shown in the illustration (Fig. 7C-43).
- Measure the clearance between master cylinder wall and piston (Fig. 7C-44).
  If the measured value exceeds the specified limit, the master cylinder assembly must be replaced.

mm (in)

Standard	Limit
0.07 (0.0028)	0.15 (0.0059)

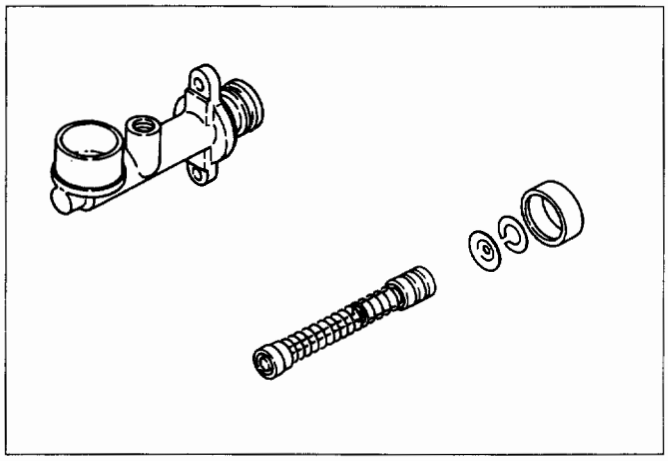

Fig. 7C-43

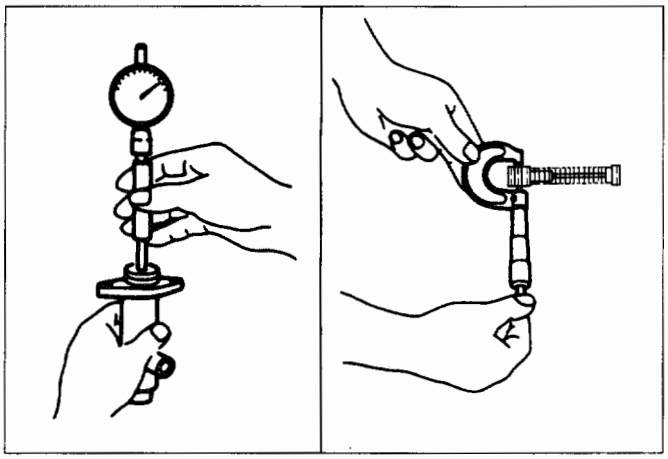

Fig. 7C-44

REASSEMBLY

To reassemble, follow the disassembly steps in the reverse order, noting the following points:

1. **Cylinder body**
   - Immerse the cylinder body in clean brake fluid (Fig. 7C-45).
2. **Piston assembly**
   Before installing, apply a thin coat of rubber grease to the piston. Install cup in groove in piston with the lip turned to front of cylinder. Use care to prevent damaging the lip of the piston seat.

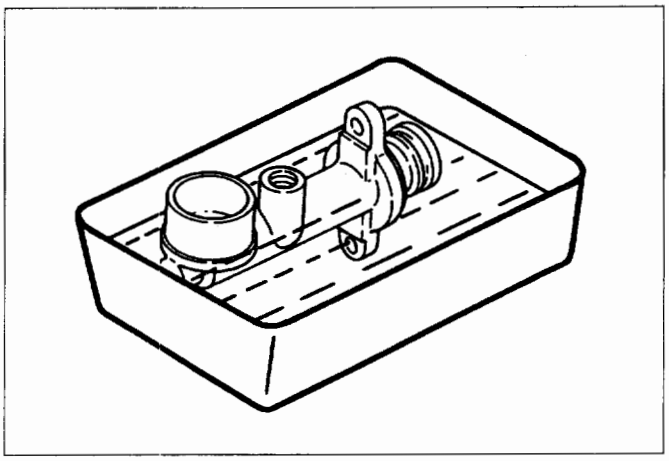

Fig. 7C-45

SLAVE CYLINDER

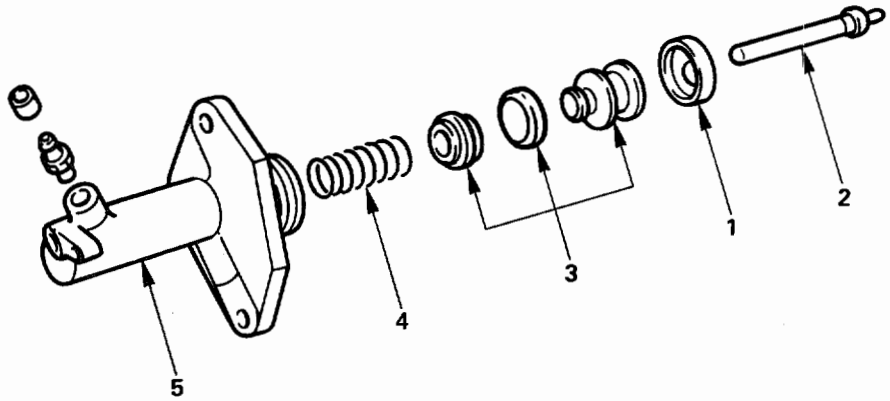

Disassembly steps
1. Boot
2. Push rod
3. Piston and piston cup
4. Spring
5. Cylinder body

Reassembly steps
To reassemble, follow the disassembly steps in the reverse order.

Fig. 7C-46

DISASSEMBLY

1. **Boot**
2. **Push rod**
3. **Piston and piston cup**
4. **Spring**
5. **Cylinder body**

INSPECTION AND REPAIR

Make the necessary adjustments, repairs, and part replacements if excessive wear or damage is discovered during inspection.

Cylinder body (Fig. 7C-47)

- Clean the cylinder body.
- Check the fluid return port for restrictions and clean it if necessary.

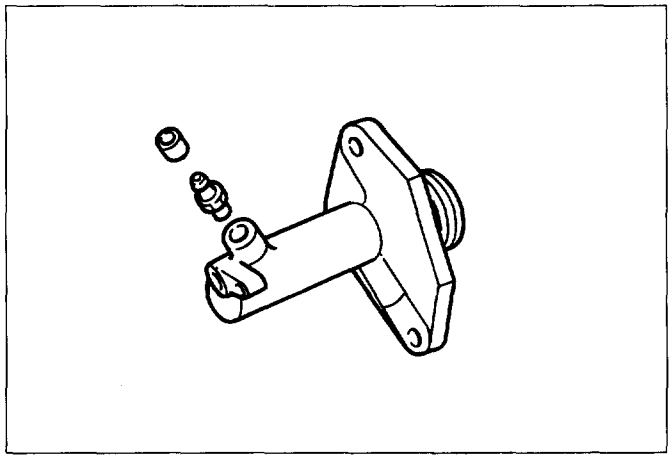

Fig. 7C-47

Piston and piston cup

- Visually inspect the disassembled piston and piston cup for excessive wear and damage (Fig. 7C-48).
  Replace the inner parts with new parts shown in the illustration.
- Measure the clearance between slave cylinder wall and piston (Fig. 7C-49).
  If the measured value exceeds the specified limit, the slave cylinder assembly must be replaced.

mm (in)

Standard	Limit
0.07 (0.0028)	0.15 (0.0059)

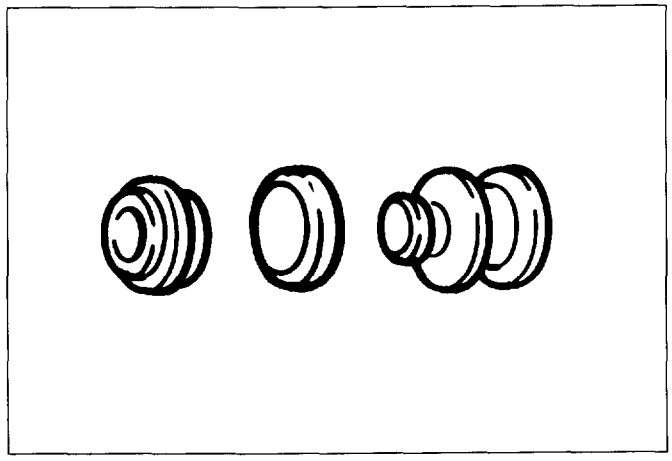

Fig. 7C-48

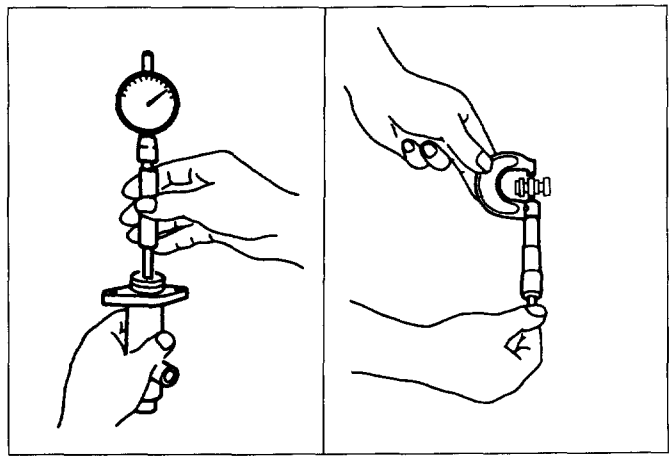

Fig. 7C-49

REASSEMBLY

To reassemble, follow the disassembly steps in the reverse order, noting the following points:

1. **Piston assembly (Fig. 7C-50)**

- Before installing the parts, apply a thin coat of rubber grease.
- Install cup in groove in piston with the lip turned to the front of cylinder. Use care so as not to scratch the cylinder.

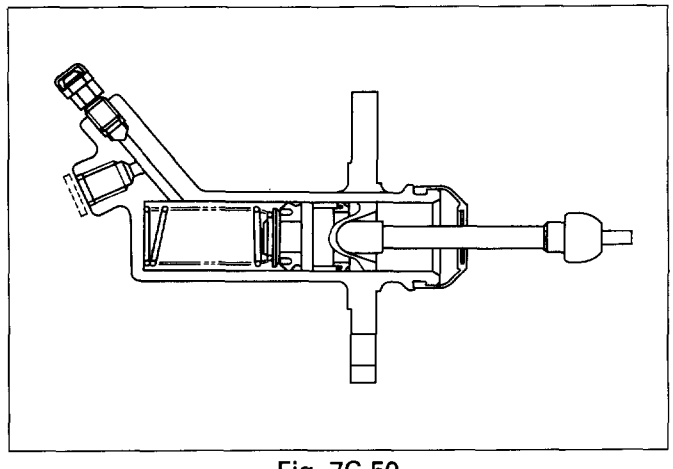

Fig. 7C-50

DAMPER CYLINDER

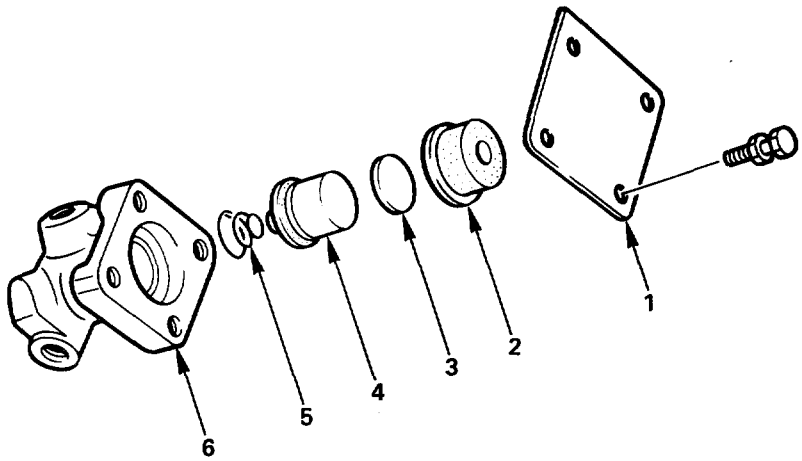

Disassembly steps
1. Cover and gasket
2. Damper rubber
3. Spacer
4. Piston assembly
5. Spring
6. Cylinder body

Reassembly steps
To reassemble, follow the disassembly steps in the reverse order.

Fig. 7C-51

DISASSEMBLY

1. **Cover and gasket**
2. **Damper rubber**
3. **Spacer**
4. **Piston assembly**
5. **Spring**
6. **Cylinder body**

INSPECTION AND REPAIR

Check damper rubber and piston cup for cracks, deformation or damage.
Replace the damper cylinder assembly if necessary.

REASSEMBLY

To assemble, follow the disassembly steps in the reverse order.

MAIN DATA AND SPECIFICATIONS

GENERAL SPECIFICATIONS

Engine		6VD1
Type		Dry single plate type with diaphragm spring
Size	mm (in)	260 (10.24)
Pressure plate		
Outside diameter	mm (in)	332 (13.07)
Clamping force	N (lb)	7208 (1621)
Spring finger height	mm (in)	49.9 - 51.9 (1.965 - 2.043)
Driven plate		
Outside diameter x inside diameter	mm (in)	260 x 170 (10.24 x 6.70)
Thickness		
Clutch disengaged	mm (in)	8.3 (0.327)
Clutch engaged	mm (in)	8.0 (0.315)
Total friction area	cm^2 (in^2)	304 x 2 (47 x 2)
Clutch control type		Hydraulic
Clutch pedal free play	mm (in)	5 - 15 (0.20 - 0.59)
Clutch pedal height	mm (in)	218.5 - 228.5 (8.602 - 8.996)
Clutch pedal stroke	mm (in)	154 - 164 (6.06 - 6.46)

TORQUE SPECIFICATIONS

N·m (lb·ft)

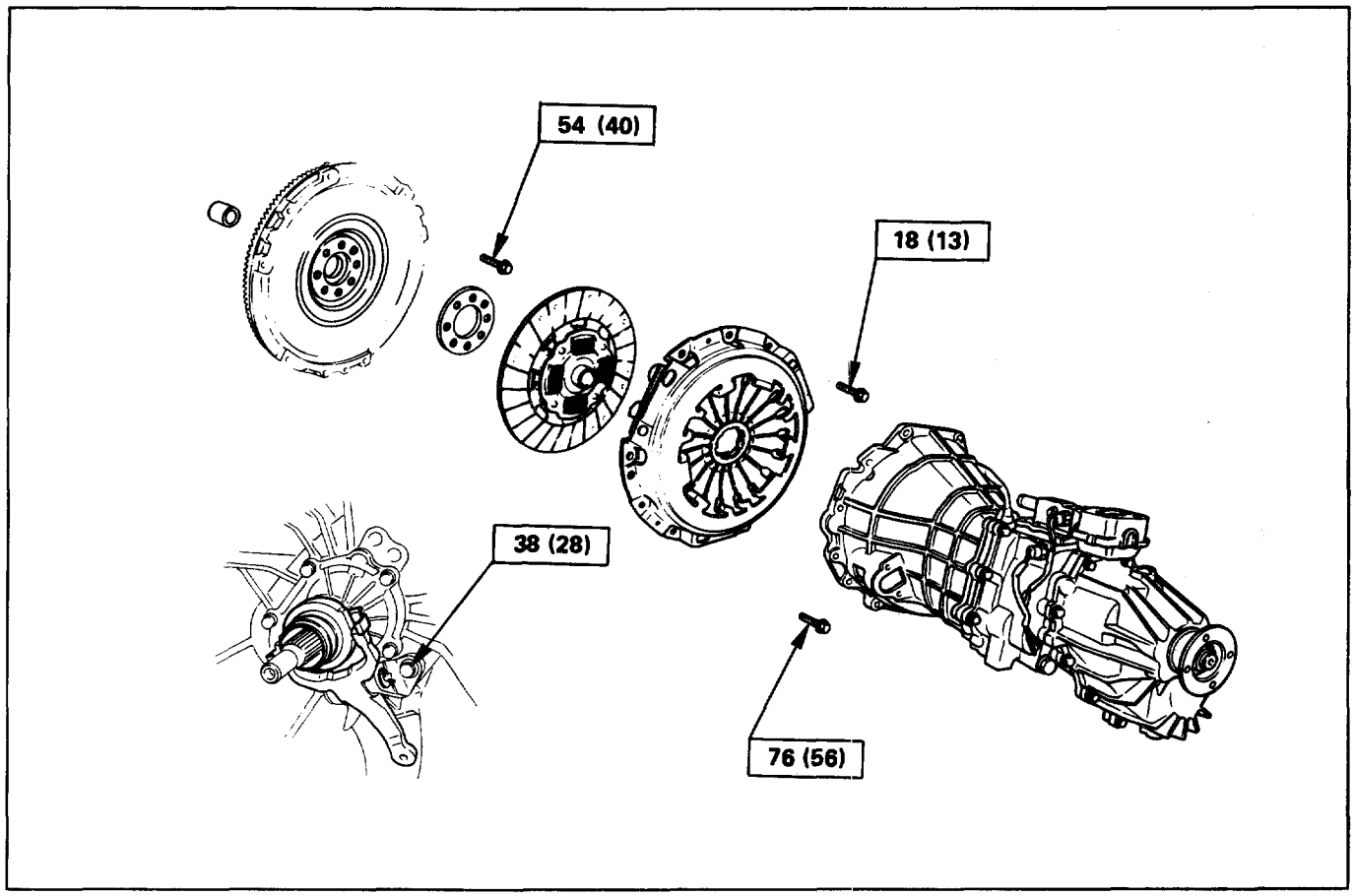

Fig. 7C-52

TORQUE SPECIFICATIONS (Cont'd)

N·m (lb·ft)

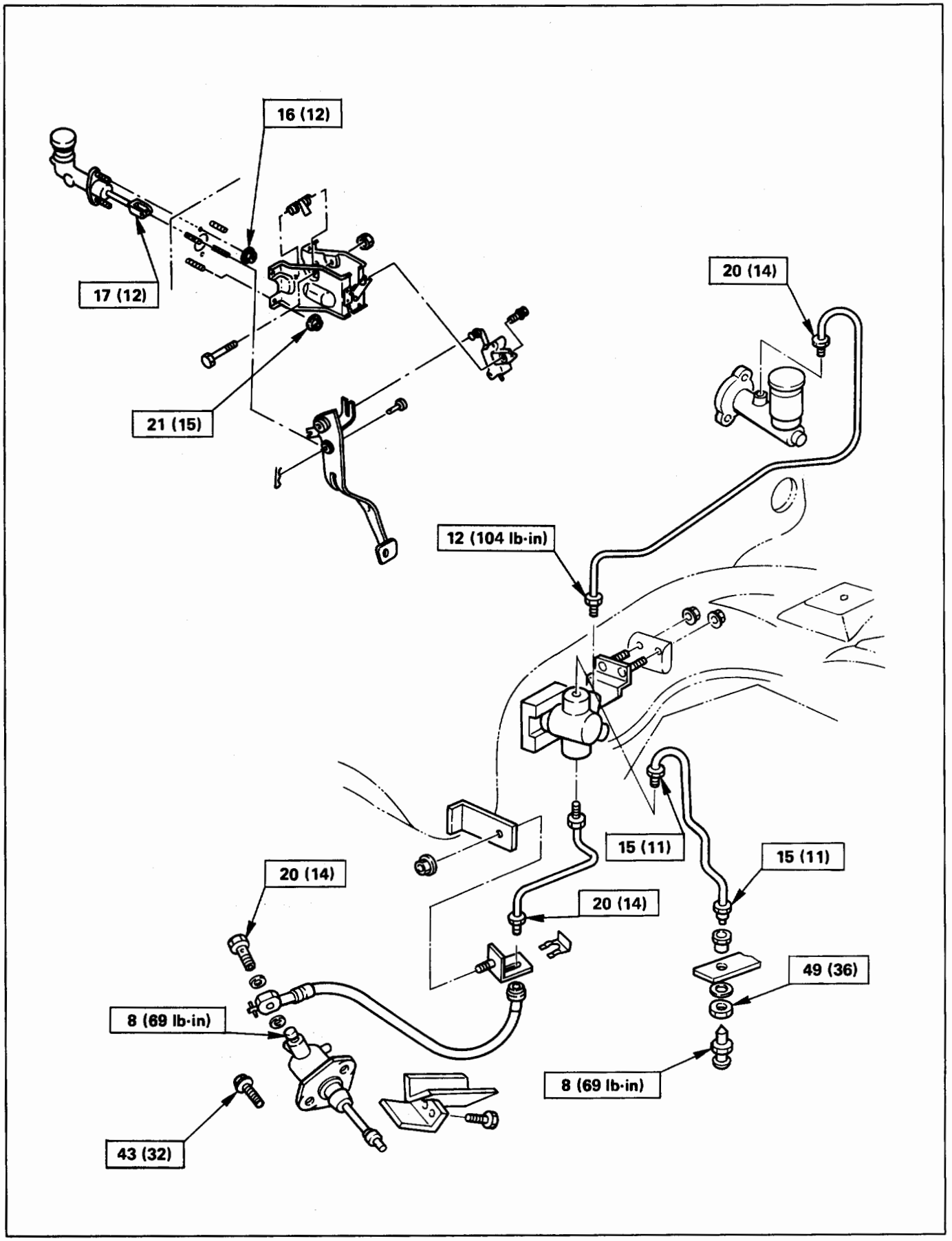

Fig. 7C-53

SPECIAL TOOLS

ILLUSTRATION	**PART NO.** PART NAME
	J-24547 Driven plate aligner
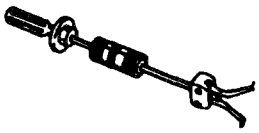	**J-5822 & J-23907** Pilot bearing remover & Sliding hammer
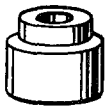	**J-26516-A** Crankshaft pilot bearing installer
	J-8092 Driver handle

SECTION 7D

TRANSFER CASE

CAUTION:
When fasteners are removed, always reinstall them at the same location from which they were removed. If a fastener needs to be replaced, use the correct part number fastener for that application. If the correct part number is not available, a fastener of equal size and strength (or stronger) may be used. Fasteners that are not reused, and those requiring thread locking compound, will be called out. The correct torque values must be used when installing fasteners that require torque. If the above conditions are not followed, parts or system damage could result.

CONTENTS

General Description 7D-1
Construction 7D-2
On-Vehicle Service 7D-3
Transfer Case (A/T) 7D-3
Transfer Rear Oil Seal 7D-5
Unit Repair 7D-8
Transfer Case Assembly (A/T) 7D-8
Transfer Rear Case Assembly 7D-11
Detent, Shift Arm, And Interlock Pin (Transfer Case Assembly) 7D-14
Transfer Case Assembly 7D-17
Main Data And Specifications 7D-29
General Specifications 7D-29
Torque Specifications 7D-30
Special Tools 7D-32

GENERAL DESCRIPTION

The transfer case is used to provide a means of providing power flow to the front axle. The transfer case also provides a means of disconnecting the front axle, providing better fuel economy and quieter operation when the vehicle is driven on improved roads where four wheel drive is not required. In addition, the transfer case provides an additional gear reduction when placed in low range, which is useful when difficult off-road conditions are encountered.

A floor mounted shift lever is used to select the operating range. When four wheel drive has been selected, the four wheel drive indicator light is designed to come on when the front axle has been engaged.

CONSTRUCTION

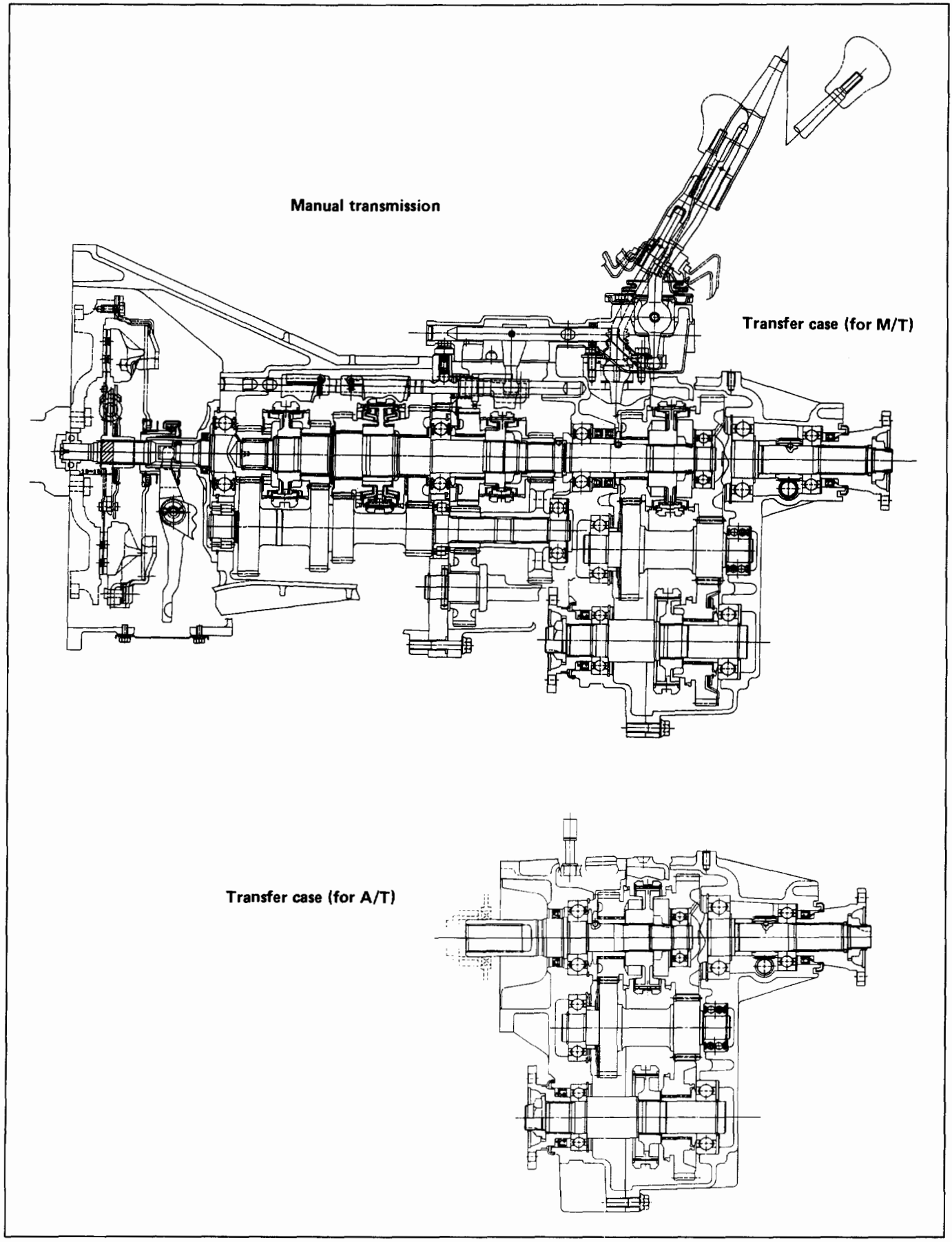

Fig. 7D-1

ON-VEHICLE SERVICE

TRANSFER CASE (A/T)

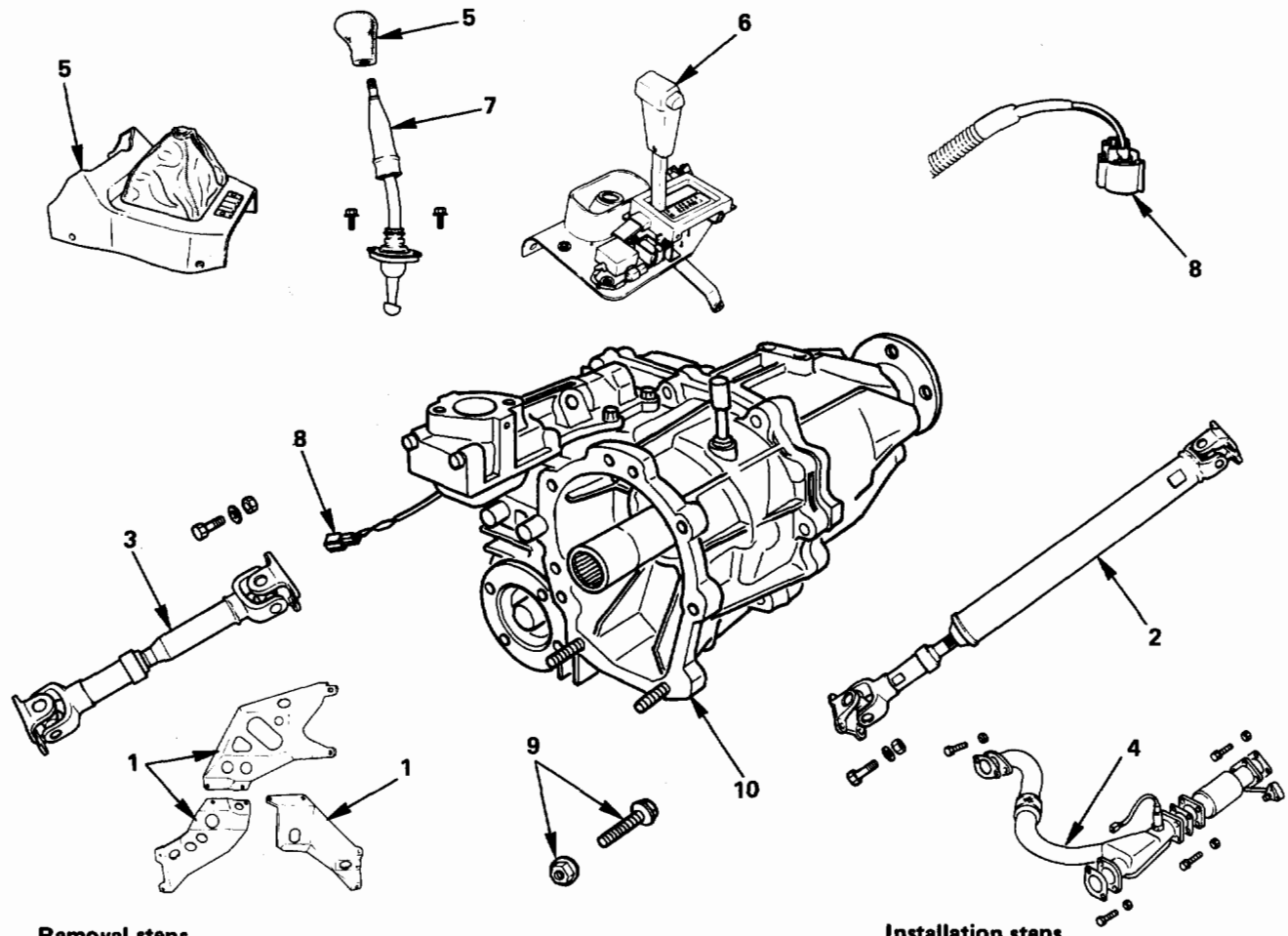

Removal steps
1. Exhaust and transfer protectors
2. Rear propeller shaft
3. Front propeller shaft
4. Exhaust pipe
5. Engine control module (ECM) cover and front console
6. Selector lever assembly
7. Transfer control lever
8. Wiring harness connector
9. Transmission-transfer bolt
10. Transfer case assembly

Installation steps
To install, follow the removal steps in the reverse order.

Fig. 7D-2

REMOVAL

Preparation:
- Disconnect battery negative (–) cable.
- Drain transfer case fluid.

1. **Exhaust and transfer protectors**
2. **Rear propeller shaft**
3. **Front propeller shaft**
   - Remove the rear and front propeller shaft from the transfer case side.
4. **Exhaust pipe**
   - Remove the pre-catalytic converter.
   - Remove the center exhaust pipe.
   - Disconnect oxygen sensor connector from the transmission harness.
5. **ECM cover and front console**
   - Remove the transfer control lever knob.
   - Disconnect the harness connectors.
6. **Selector lever assembly**
   - Disconnect the shift lock cable from the selector lever assembly side (Fig. 7D-3).
   - Disconnect the harness connectors.
   - Disconnect the shift control rod from the selector lever assembly side (Fig. 7D-4).

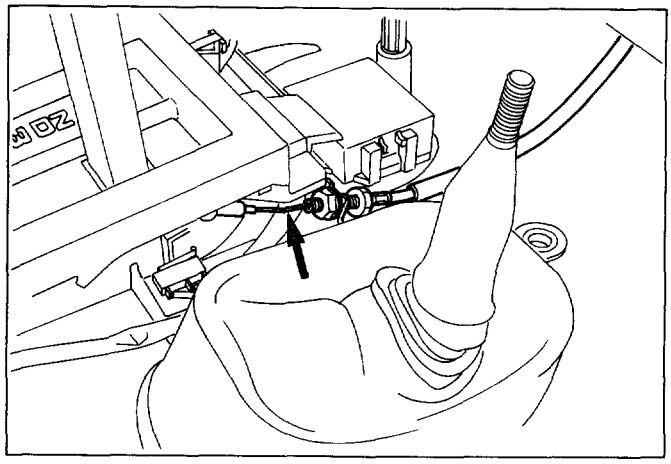

Fig. 7D-3

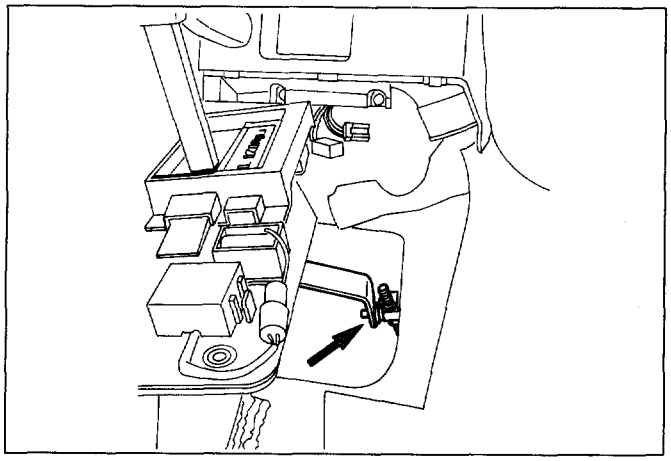

Fig. 7D-4

7. **Transfer control lever**
8. **Wiring harness connector**
   - Disconnect the 4WD switch and speed sensor harness connector from the transmission harness.
9. **Transmission-transfer bolt**
   - Support the transfer case with a transmission jack.
   - Remove four transmission-transfer bolts and three nuts.
10. **Transfer case assembly**
   - Remove the transfer case assembly from the vehicle.

INSTALLATION

To install, follow the removal steps in the reverse order, noting the following points:

1. Transfer case assembly
   - Apply a thin coat of molybdenum disulfide grease to the input shaft spline (Fig. 7D-5).

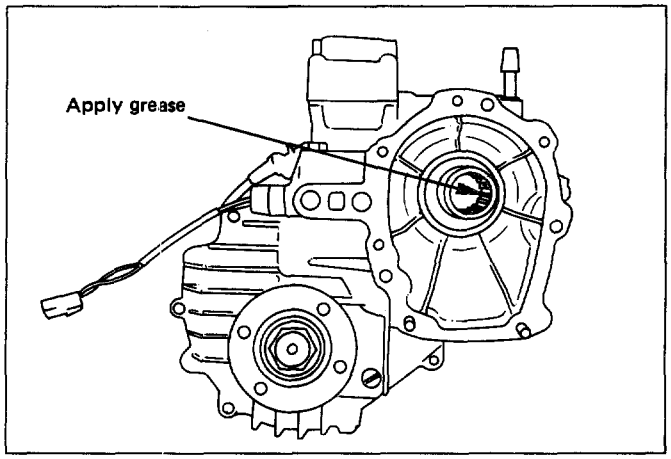

Fig. 7D-5

   - Transmission-transfer bolt (Fig. 7D-6)

Torque N·m (lb·ft)	46 (34)

2. Exhaust pipe bolt

Torque	N·m (lb·ft)
Center pipe front side	43 (32)
Pre-catalytic converter bolt	43 (32)

3. Propeller shaft bolt

Torque N·m (lb·ft)	63 (46)

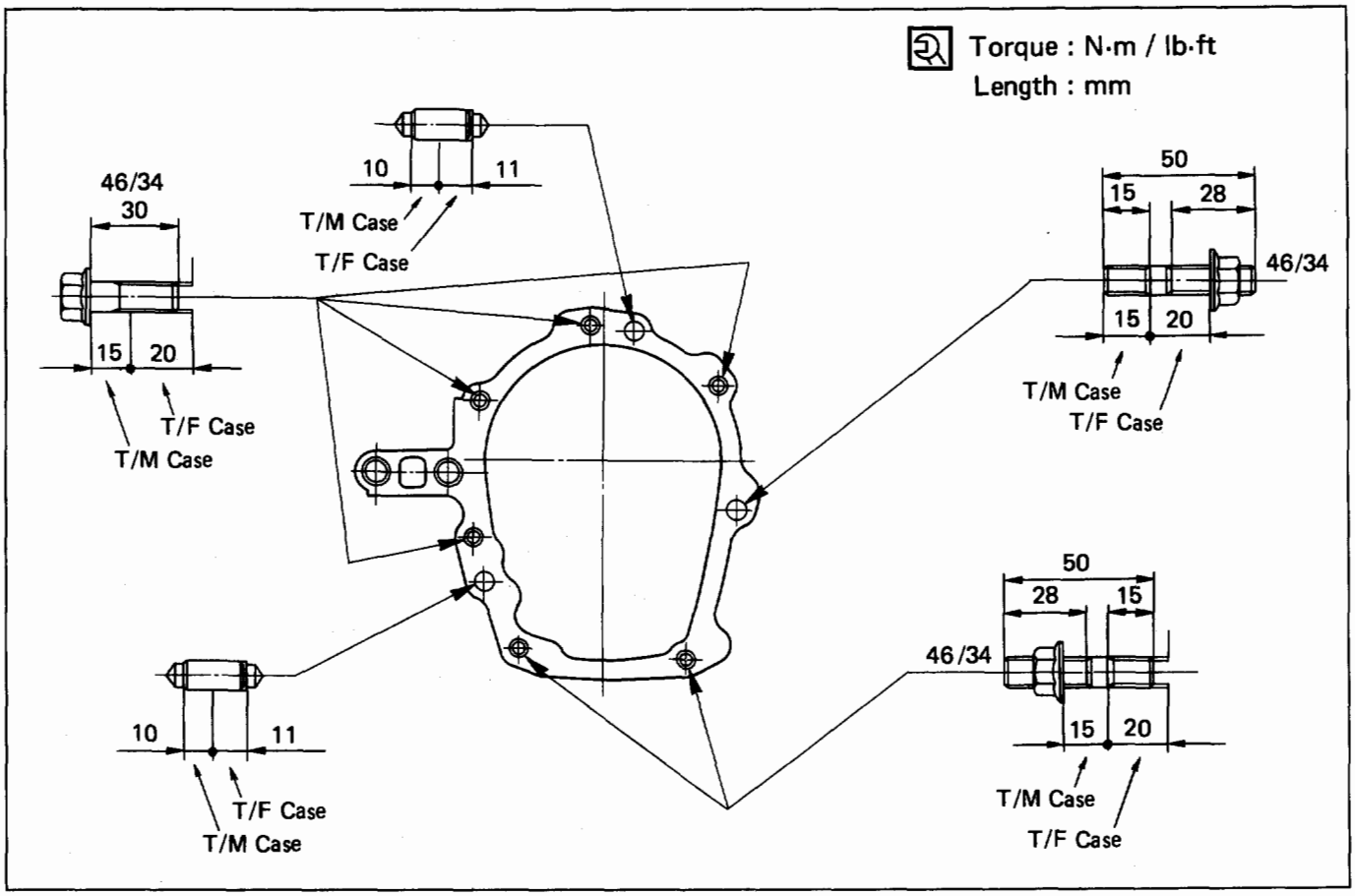

Fig. 7D-6

TRANSFER REAR OIL SEAL

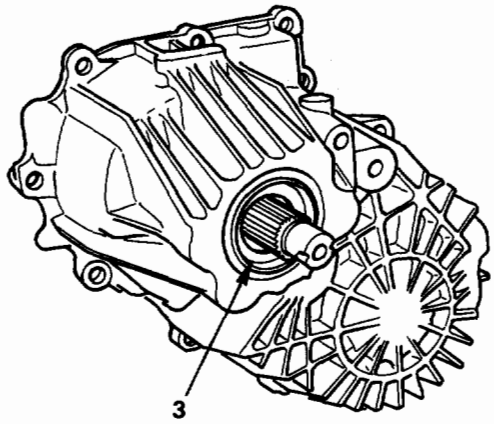

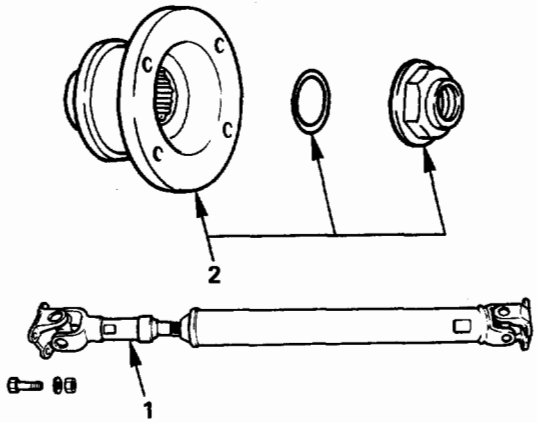

Removal steps
1. Rear propeller shaft
2. End nut and rear companion flange
3. Oil seal

Installation steps
To install, follow the removal steps in the reverse order.

Fig. 7D-7

REMOVAL

1. **Rear propeller shaft**
   - Disconnect the rear propeller shaft from the transfer case side.
2. **End nut and rear companion flange.**
   - Use the companion flange holder to remove the end nut (Fig. 7D-8).
     Companion flange holder: J-37221
   - Use the universal puller to remove the rear companion flange and O-ring.

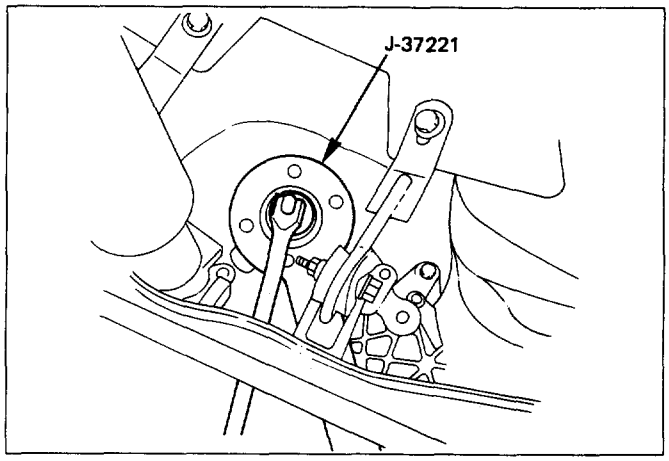

Fig. 7D-8

3. **Oil seal**
   - Remove the oil seal from the transfer case.

INSTALLATION

To install, follow the removal steps in the reverse order, noting the following points:

3. **Oil seal**
   - Apply engine oil to the oil seal outer surfaces.
   - Apply recommended grease (BESCO L2) or equivalent to the oil seal lip.
   - Use the oil seal installer to install the rear seal to the transfer rear case (Fig. 7D-9).
     Rear oil seal installer: J-39208

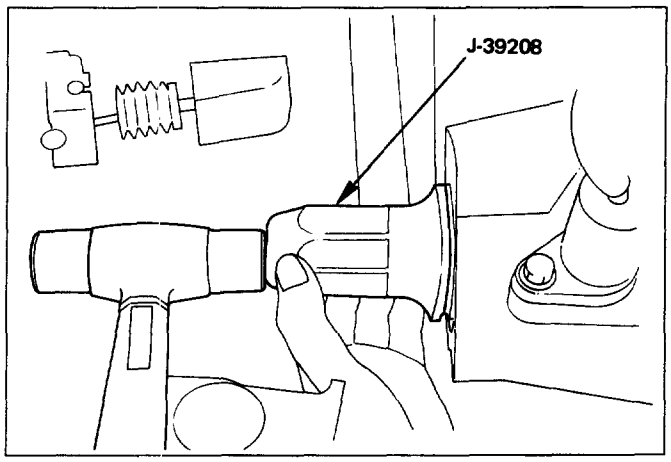

Fig. 7D-9

2. **Rear companion flange and end nut**
   - Install the rear companion flange and O-ring.
   - Use the flange holder to install the end nut.
     Companion flange holder: J-37221

Torque N·m (lb·ft)	167 (123)

   - Use the punch to stake the end nut at two spots (Fig. 7D-10 & Fig. 7D-11).
     Punch: J-39209

Note: Be sure to confirm that there is no crack at the staked portion of the end nut after staking.

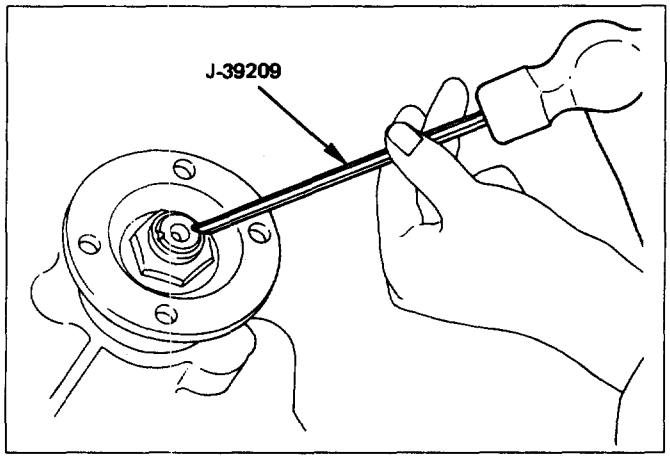

Fig. 7D-10

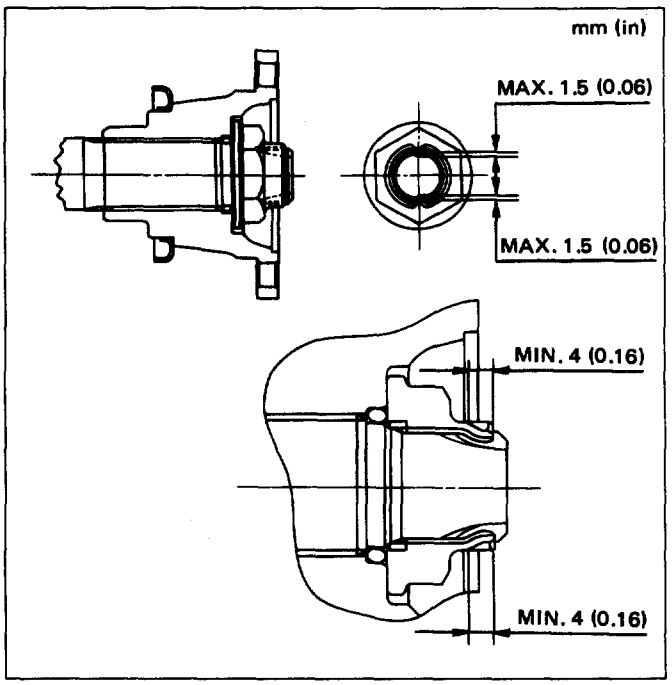

Fig. 7D-11

1. **Rear propeller shaft**
   - Connect the rear propeller shaft to the transfer case.

	Torque N·m (lb·ft)	63 (46)

UNIT REPAIR

TRANSFER CASE ASSEMBLY (A/T)

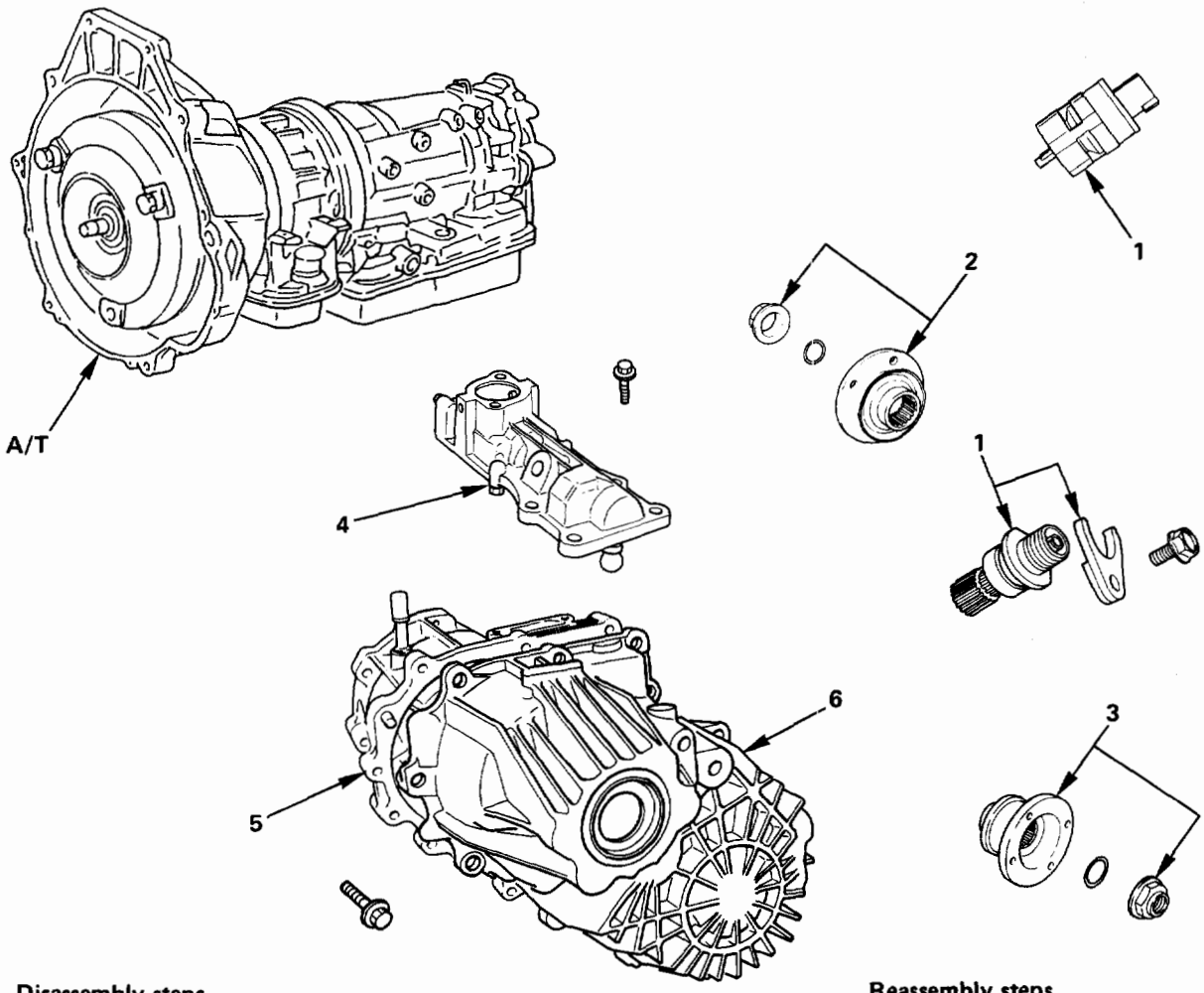

Disassembly steps
1. Speedometer sensor and speedometer driven gear
2. Front companion flange
3. Rear companion flange
4. Control box assembly
5. Transfer case assembly
6. Transfer rear case assembly

Reassembly steps
To reassemble, follow the disassembly steps in the reverse order.

Fig. 7D-12

DISASSEMBLY

1. **Speedometer sensor and speedometer driven gear**
   - Remove the speedometer sensor.
   - Remove the plate.
   - Remove the speedometer driven gear bushing and driven gear.

NOTE: Apply a reference mark to the driven gear bushing before removal.

2. **Front companion flange**
3. **Rear companion flange**
   - Use the flange holder to remove the end nut (Fig. 7D-13).

     Flange companion holder: J-37221
   - Remove the front and rear companion flange.

NOTE:
Use the universal puller to remove the rear companion flange.

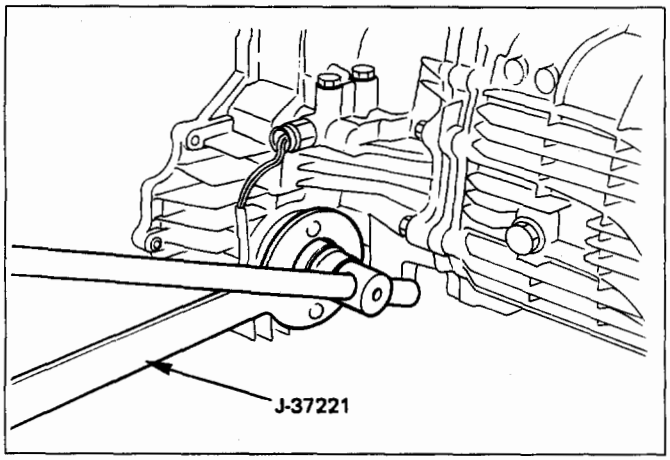

Fig. 7D-13

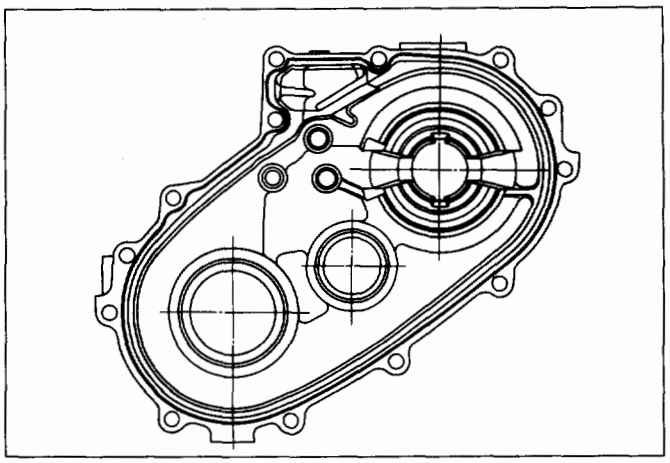

Fig. 7D-14

4. **Control box assembly**
5. **Transfer case assembly**
6. **Transfer rear case assembly**

REASSEMBLY

6. **Transfer rear case assembly**
5. **Transfer case assembly**

- Apply recommended liquid gasket (LOCTITE FMD127) or its equivalent to the transfer rear case fitting faces (Fig. 7D-14).
- Perform the following steps before fitting the transfer rear case.

(1) Shift the High-Low shift to the 4H side.
(2) Turn the select rod counterclockwise so that the select block projection Ⓐ may enter into the 2WD-4WD shift block (Fig. 7D-15).
(3) The cut-away portion of the select rod head Ⓑ should align with that of the rear case hole's stopper © (Fig. 7D-16).

- Tighten the transfer rear case bolts to the specified torque.

Torque N·m (lb·ft)	37 (27)

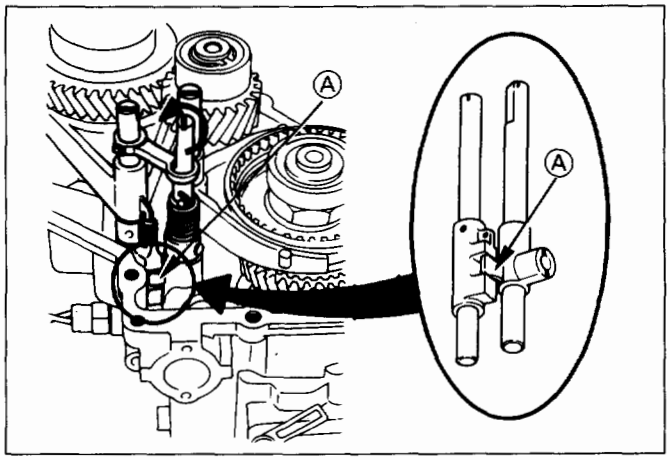

Fig. 7D-15

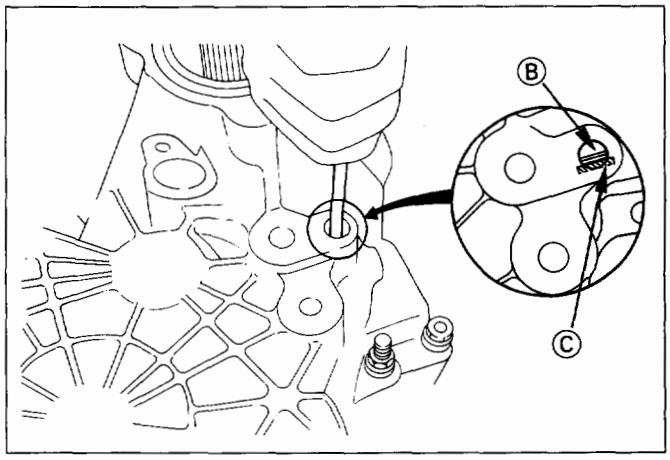

Fig. 7D-16

4. **Control box assembly**

Torque N·m (lb·ft)	19 (14)

3. **Rear companion flange**
2. **Front companion flange**

- Install the companion flange.
- Use the flange holder to tighten the flange nuts to the transfer case (Fig. 7D-17).

Companion flange holder: J-37221

- Tighten new transfer flange nuts to the specified torque.

Torque	N·m (lb·ft)
Rear companion flange	167 (123)
Front companion flange	137 (101)

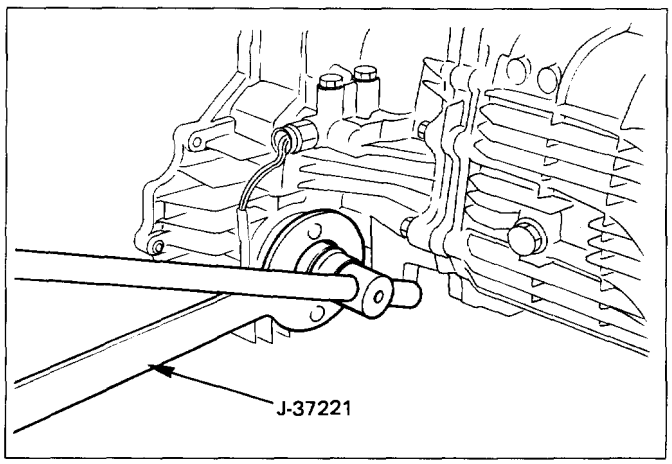

Fig. 7D-17

- Use the punch to stake the rear companion flange nut at two spots (Fig. 7D-18 & Fig. 7D-19).
  Punch: J-39209
- Stake the front companion flange nut at one spot.

Note: Be sure to confirm that there is no crack at the staked portion of the flange nut after staking.

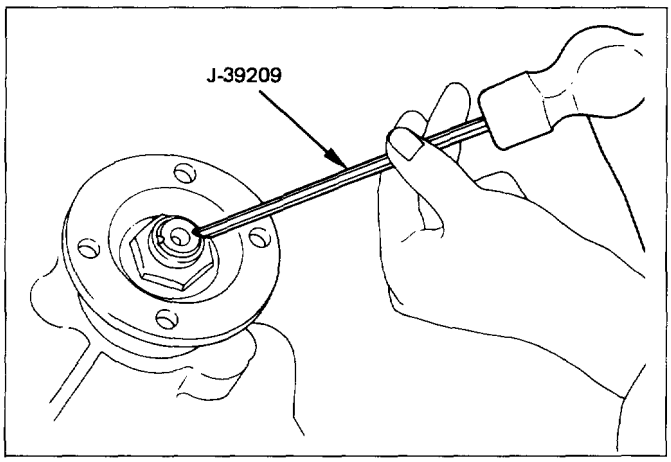

Fig. 7D-18

1. **Speedometer driven gear and speedometer sensor.**
   - Install the O-ring to the speedometer driven gear bushing.
   - Install the driven gear to the speedometer driven gear bushing.
   - Install the speedometer driven gear assembly to the transfer rear cover (Fig. 7D-20).
   - Install the plate to the transfer rear case.

Torque N·m (lb·ft)	15 (11)

- Install the speedometer sensor.

Torque N·m (lb·ft)	27 (20)

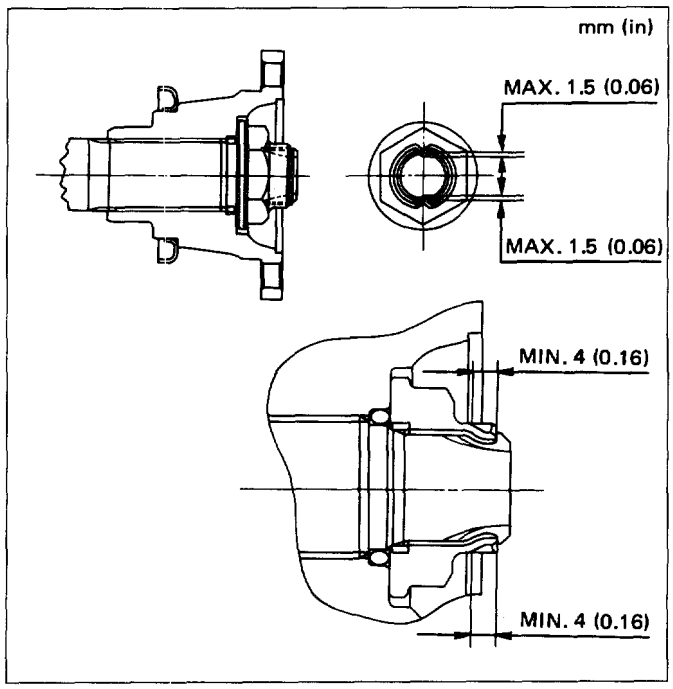

Fig. 7D-19

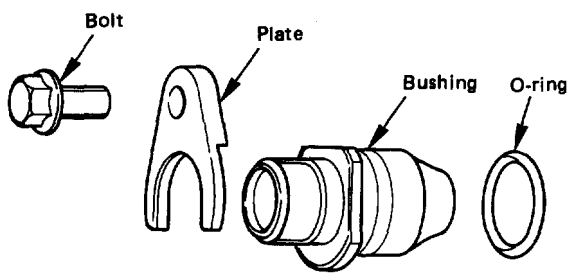

Type	Drive gear teeth × Driven gear teeth
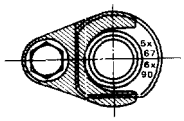	6 × 19

Fig. 7D-20

TRANSFER REAR CASE ASSEMBLY

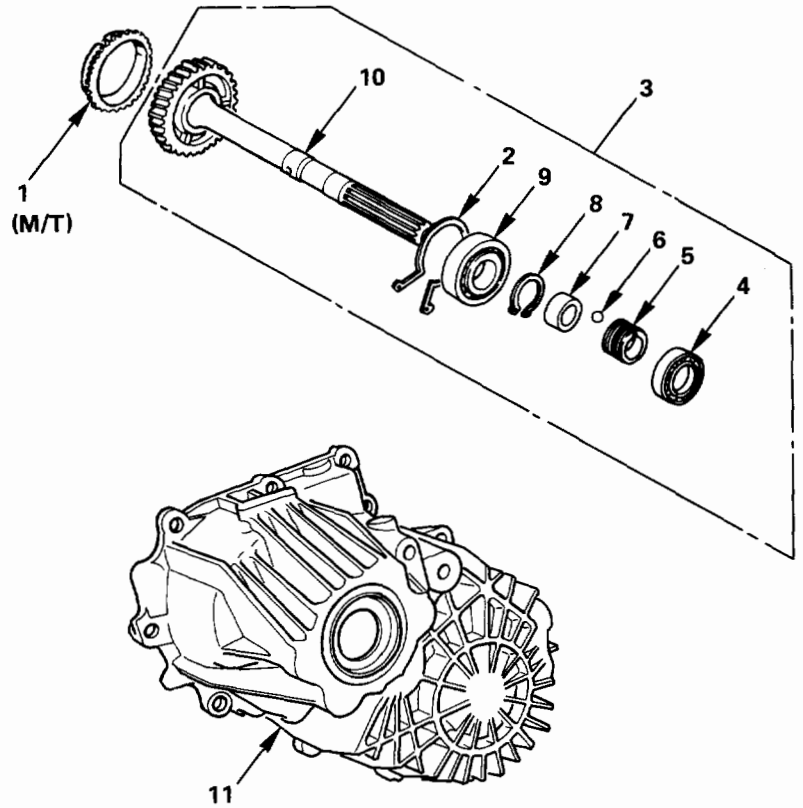

Disassembly steps
1. Block ring (M/T)
2. Bearing snap ring
3. Rear output shaft assembly
4. Ball bearing
5. Speedometer drive gear
6. Ball
7. Collar
8. Bearing snap ring
9. Ball bearing
10. Rear output shaft
11. Transfer rear case (with oil seal)

Reassembly steps
To reassemble, follow the disassembly steps in the reverse order.

Fig. 7D-21

DISASSEMBLY

1. **Block ring (M/T)**
2. **Bearing snap ring**
   - Use a pair of snap ring pliers to remove the snap ring (Fig. 7D-22).

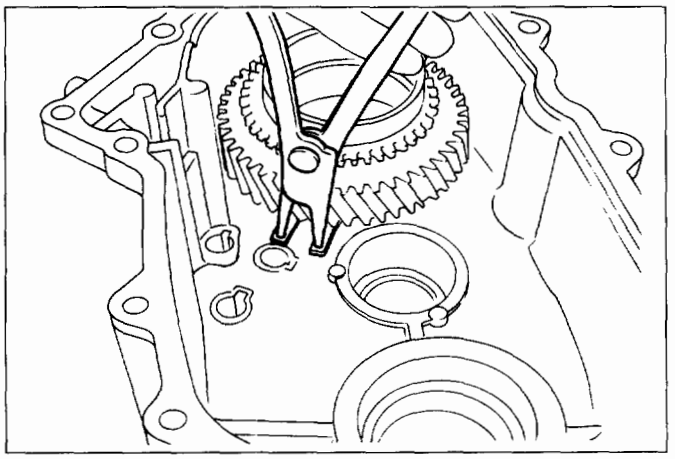

Fig. 7D-22

3. **Rear output shaft assembly**
   - Remove the rear output shaft assembly from the transfer rear case.
4. **Ball bearing**
   - Use a bench press and the bearing remover to remove the ball bearing (Fig. 7D-23).

     Bearing remover: J-22912-01

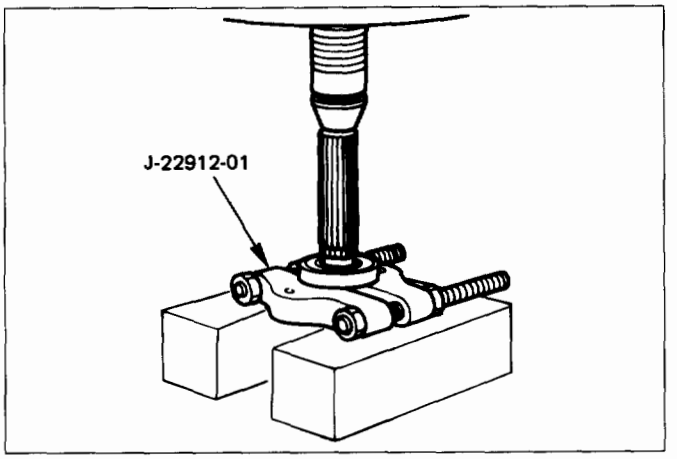

Fig. 7D-23

5. **Speedometer drive gear**
6. **Ball**
7. **Collar**
8. **Bearing snap ring**
   - Use a pair of snap ring pliers to remove the snap ring.
9. **Ball bearing**
10. **Rear output shaft**
    - Use a bench press and the bearing remover to remove the ball bearing (Fig. 7D-24).
      Bearing remover: J-22912-01
11. **Transfer rear case (with oil seal)**

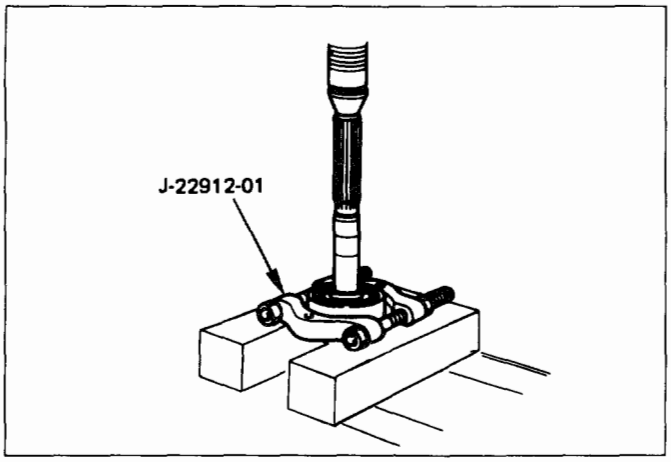

Fig. 7D-24

INSPECTION AND REPAIR

Refer to "TRANSFER CASE ASSEMBLY" in this Section for inspection and repair.

REASSEMBLY

11. **Transfer rear case (with oil seal)**
    Oil seal replacement
    - Remove the oil seal from the transfer rear case.
    - Apply engine oil to the oil seal outer surfaces.
    - Fill in recommended grease (BESCO L2) or equivalent in the oil seal lip.
    - Use the oil seal installer to install the rear oil seal to the transfer rear case (Fig. 7D-25).
      Oil seal installer: J-39208

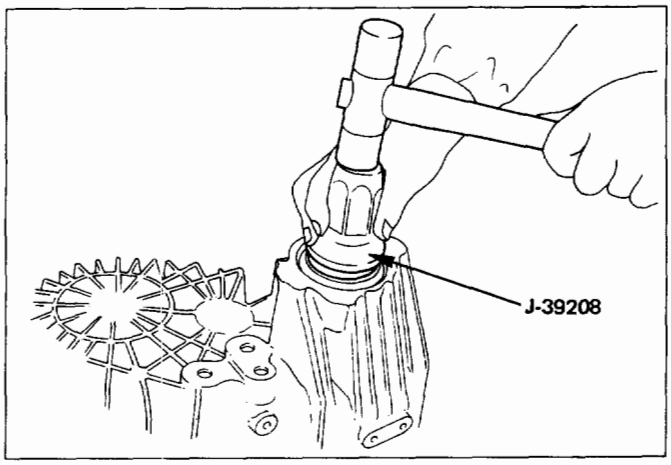

Fig. 7D-25

10. **Rear output shaft**
9. **Ball bearing**
    - Use the ball bearing installer and the adapter to install the ball bearing (Fig. 7D-26).
      Ball bearing installer: J-37223
      Adapter: J-37486

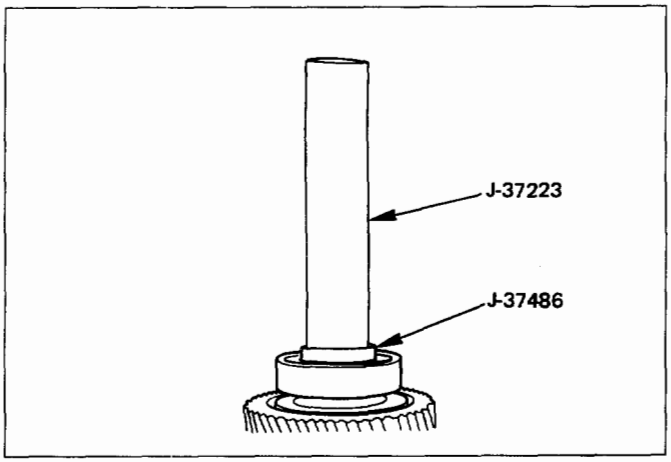

Fig. 7D-26

8. **Bearing snap ring**
7. **Collar**
6. **Ball**
5. **Speedometer drive gear (Fig. 7D-27)**
4. **Ball bearing**
    - Use the ball bearing installer to install the ball bearing (Fig. 7D-28).
      Ball bearing installer: J-37223

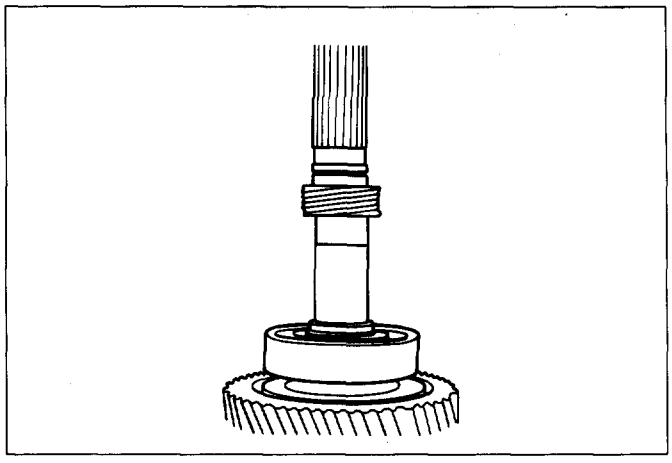

Fig. 7D-27

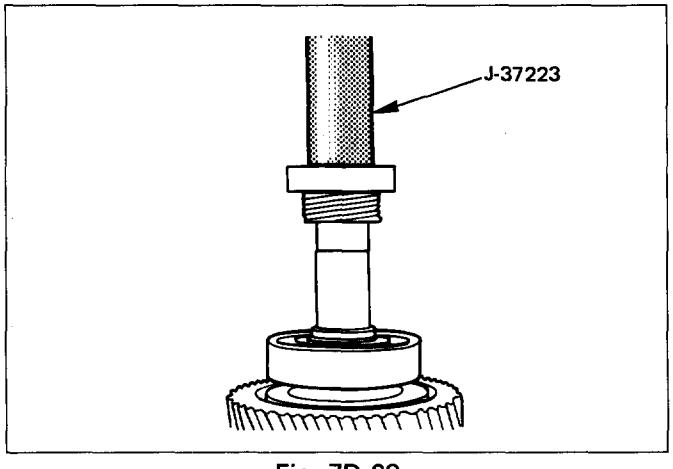

Fig. 7D-28

3. **Rear output shaft assembly**
   - Install the rear output shaft assembly to the transfer rear case.
2. **Bearing snap ring**

NOTE:
The snap ring must be fully inserted into the transfer rear case snap ring groove.

1. **Block ring (M/T)**

DETENT, SHIFT ARM, AND INTERLOCK PIN (TRANSFER CASE ASSEMBLY)

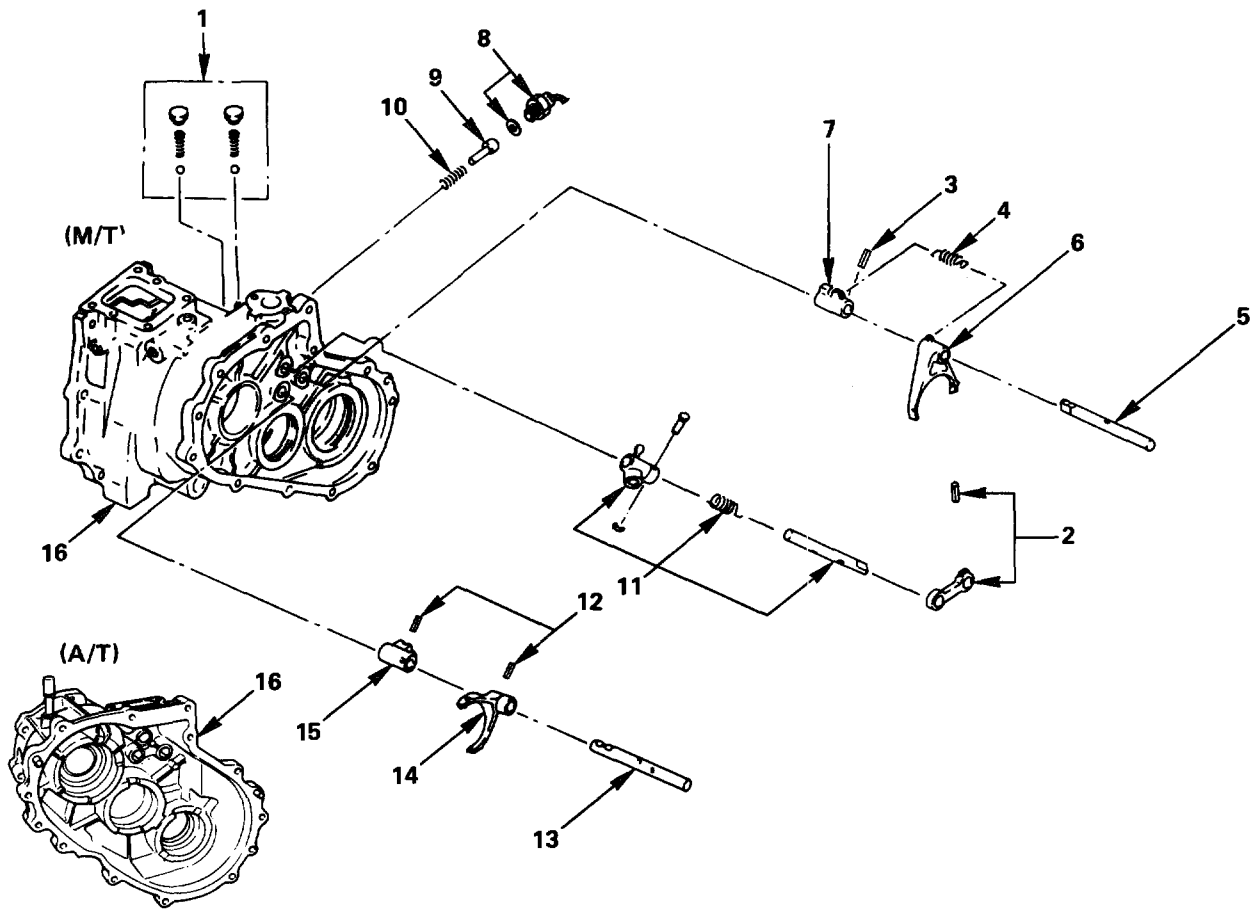

Disassembly steps

1. Detant ball, spring and plug
2. Spring pin and bridge
3. Spring pin
4. Spring
5. 2WD-4WD shift rod
6. Shift arm
7. Shift block
8. 4WD indicator switch
9. Interlock pin
10. Spring
11. Select rod assembly
12. Spring pin
13. High-low shift rod
14. Shift arm
15. Shift block
16. Transfer case

Reassembly steps

To reassemble, follow the disassembly steps in the reverse order.

Fig. 7D-29

DISASSEMBLY

1. **Detent ball, spring and plug**
2. **Spring pin and bridge**
   - Use a spring pin remover to remove the spring pin from the bridge (Fig. 7D-30).

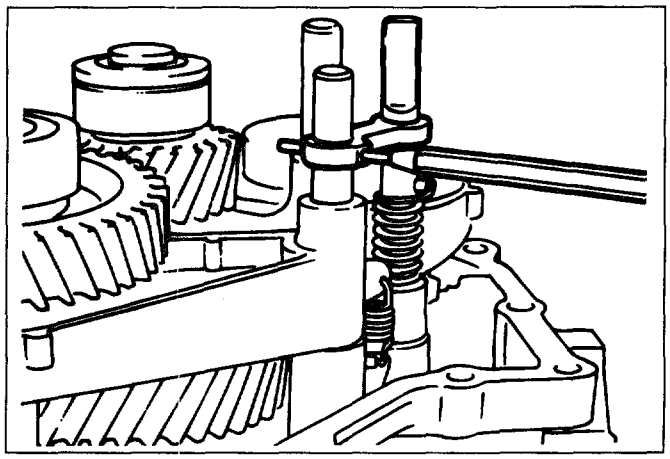

Fig. 7D-30

3. **Spring pin**
4. **Spring**
5. **2WD-4WD shift rod**
   - Engage the 2WD-4WD sleeve with front output gear. Remove the spring pin from the block. Remove the shift rod (Fig. 7D-31).

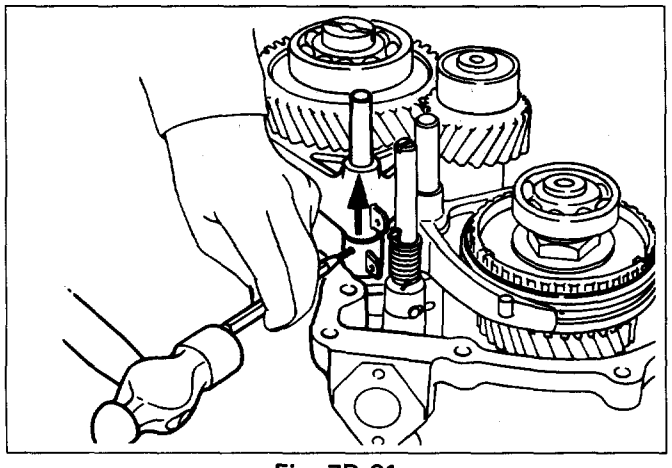

Fig. 7D-31

6. **Shift arm**
7. **Shift block**
8. **4WD indicator switch**
9. **Interlock pin**
10. **Spring**
    - Use a magnetic tool to remove the interlock pin from the transfer case (Fig. 7D-32).

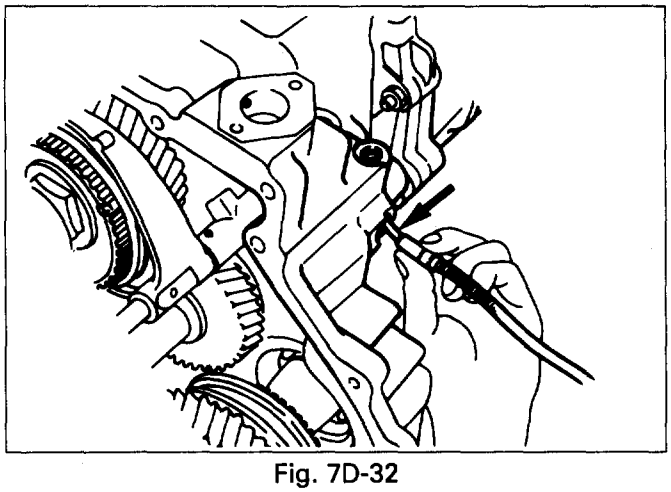

Fig. 7D-32

11. **Select rod assembly**
12. **Spring pin**
13. **High-low shift rod**
    - Use a spring pin remover to remove the shift arm spring pin from the shift arm and shift block. Remove the high-low shift rod (Fig. 7D-33).
14. **Shift arm**
15. **Shift block**
16. **Transfer case**

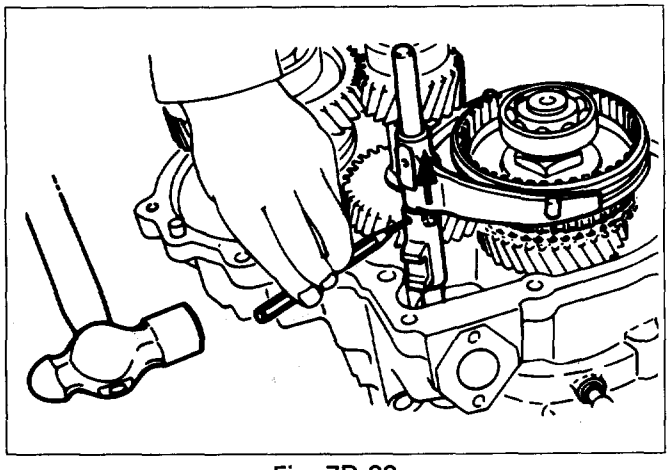

Fig. 7D-33

INSPECTION AND REPAIR

Refer to "TRANSFER CASE ASSEMBLY" in this Section for inspection and repair.

REASSEMBLY

16. **Transfer case**
15. **Shift block**
14. **Shift arm**
13. **High-low shift rod**
12. **Spring pin**
    - Engage the High-Low sleeve with 4H side.
    - Install the spring pin to the shift block and shift arm (Fig. 7D-34).

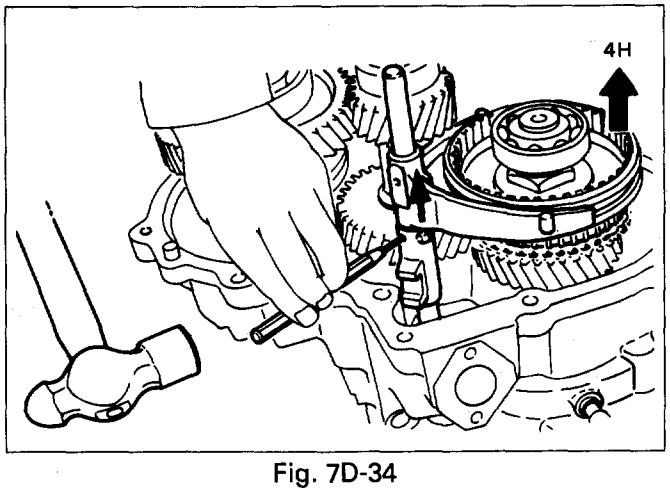

Fig. 7D-34

11. **Select rod assembly**
10. **Spring**

9. Interlock pin

- Engage the High-Low sleeve with 4H side and install the interlock pin ① in proper direction.
- Install the shift rod: 2WD-4WD ② with interlock pin pushed in (Fig. 7D-35).

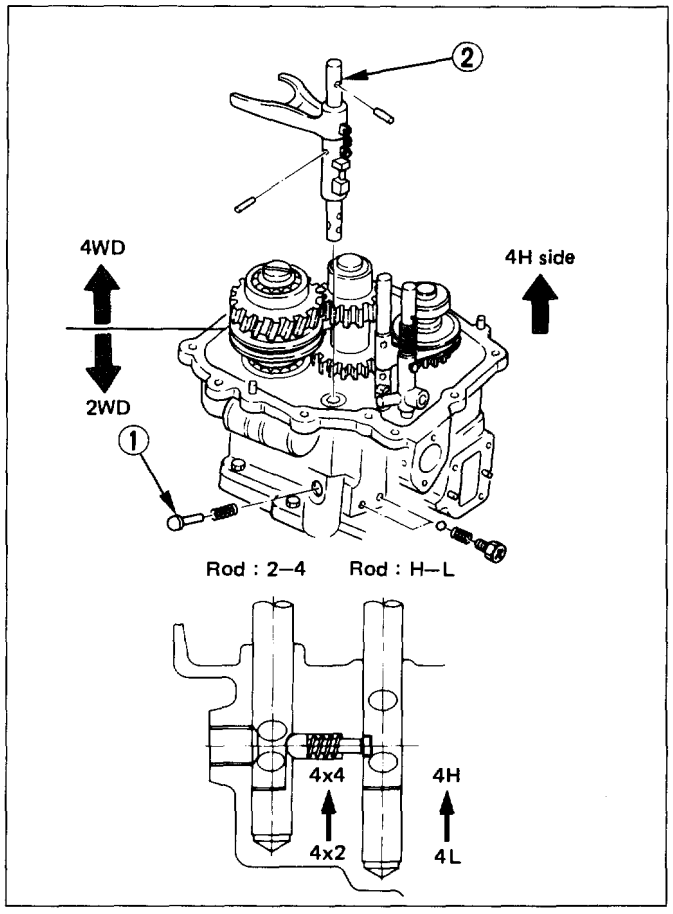

Fig. 7D-35

8. 4WD indicator switch

Torque N·m (lb·ft)	39 (29)

7. Shift block

6. Shift arm

5. 2WD-4WD shift rod

4. Spring

3. Spring pin

- Engage the 2WD-4WD sleeve with the 4WD side and install the spring pin (Fig. 7D-36).

2. Spring pin and bridge

1. Detent ball, spring and plug

- Tighten the plug to the specified torque.

Torque N·m (lb·ft)	25 (18)

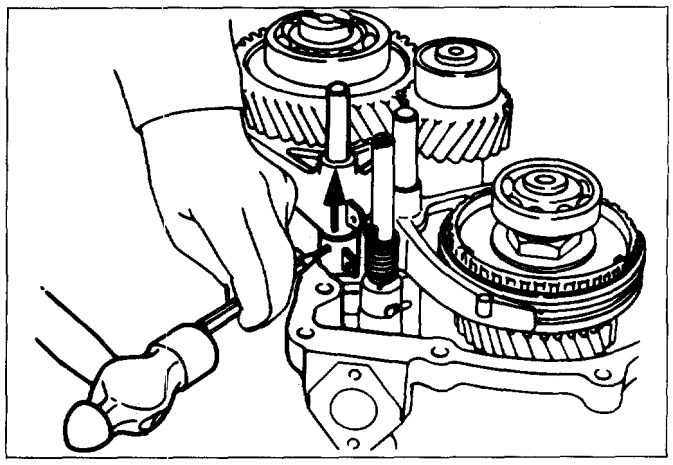

Fig. 7D-36

TRANSFER CASE ASSEMBLY

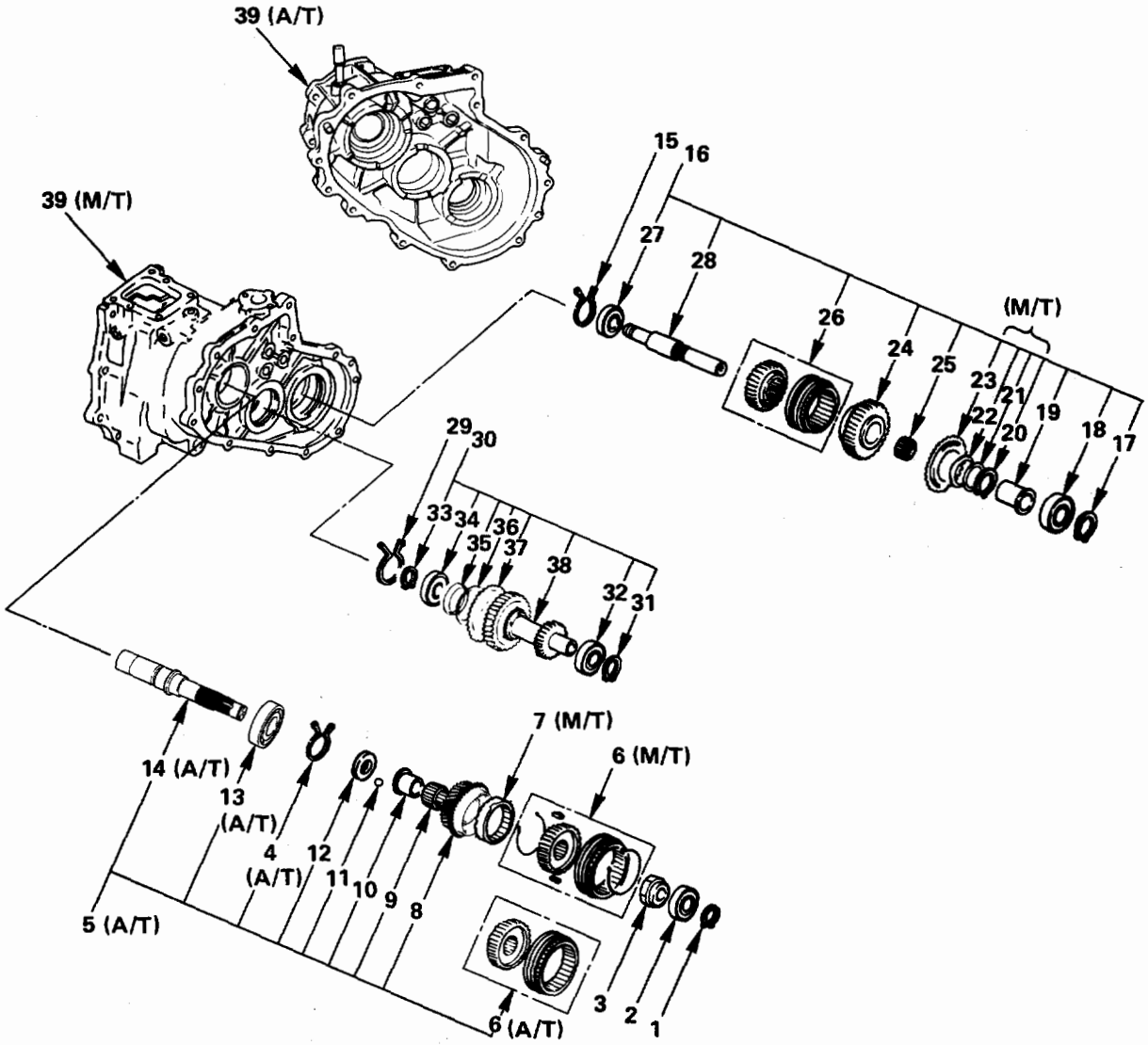

Disassembly steps

1. Bearing snap ring
2. Ball bearing
3. Lock nut
4. Snap ring (A/T)
5. Input shaft assembly (A/T)
6. High-low sleeve & hub (A/T) or High-low synchronizer assembly (M/T)
7. High-low block ring (M/T)
8. Transfer input gear
9. Needle bearing
10. Bearing collar
11. Ball
12. Plate
13. Ball bearing (A/T)
14. Input shaft (A/T)
15. Bearing snap ring
16. Front output gear assembly
17. Bearing snap ring
18. Ball bearing
19. Bearing collar
20. Sub-gear snap ring (M/T)
21. Spacer (M/T)
22. Belleville spring (M/T)
23. Sub-gear (M/T)
24. Front output gear
25. Needle bearing
26. Clutch sleeve & hub
27. Ball bearing
28. Front output shaft
29. Bearing snap ring
30. Counter gear assembly
31. Snap ring
32. Ball bearing
33. Snap ring
34. Ball bearing
35. Spacer
36. Belleville spring
37. Sub-gear
38. Counter gear
39. Transfer case (with oil seal)

Reassembly steps

To reassemble, follow the disassembly steps in the reverse order.

Fig. 7D-37

DISASSEMBLY

1. **Bearing snap ring**
   - Use a pair of snap ring pliers to remove the snap ring.
2. **Ball bearing**
   - Use a bearing remover to remove the ball bearing (Fig. 7D-38).

     Bearing remover: J-37217

     Puller: J-8433

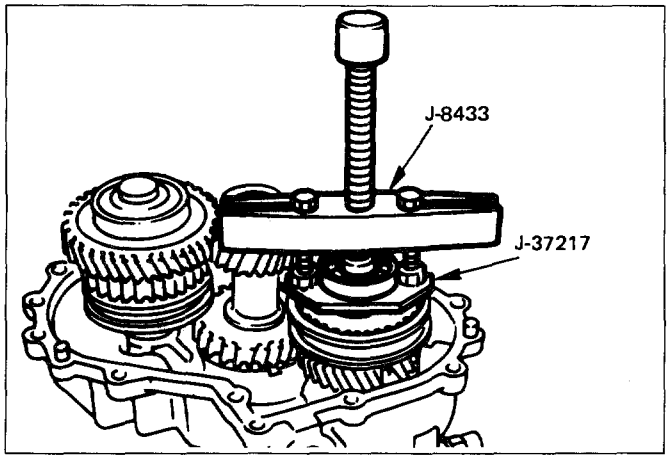

Fig. 7D-38

3. **Lock nut**
   - Install the front companion flange temporarily.
   - Use the flange holder and lock nut wrench to remove the lock nut (Fig. 7D-39 & Fig. 7D-40).

     Companion flange holder: J-37221

     Lock nut wrench: J-37219
   - Remove the front companion flange.

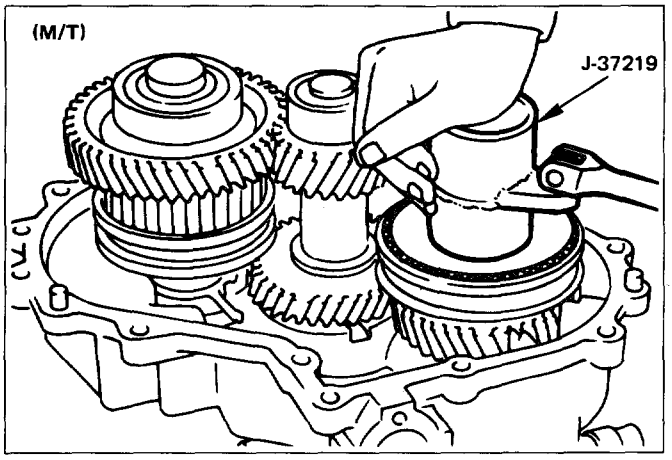

Fig. 7D-39

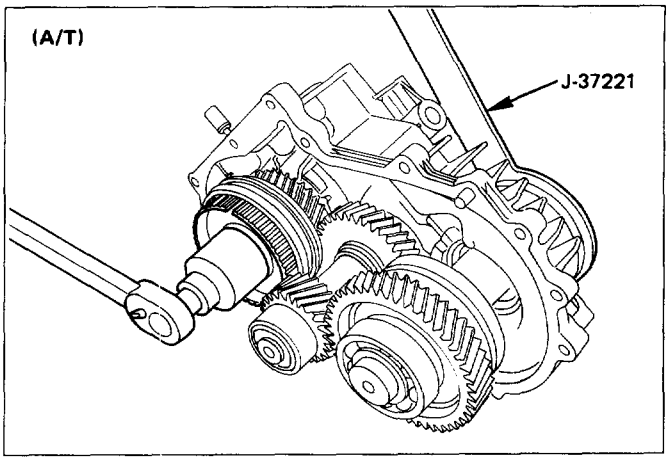

Fig. 7D-40

4. **Snap ring (A/T)**
5. **Input shaft assembly (A/T)**
   - Remove the input shaft assembly from the transfer case (Fig. 7D-41).

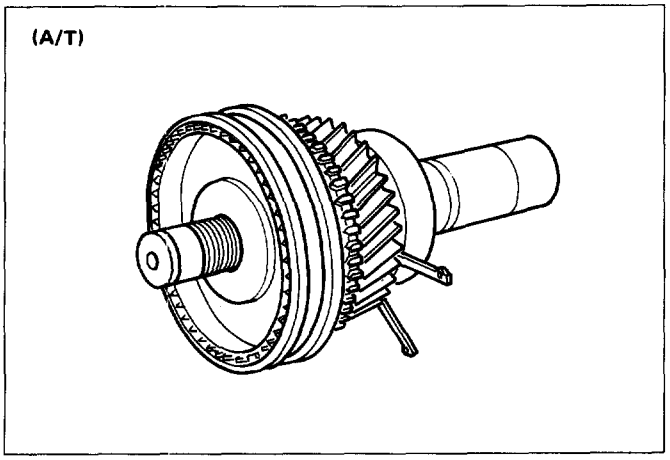

Fig. 7D-41

6. **High-low sleeve and hub (A/T) or High-low synchronizer assembly (M/T)**
7. **High-low block ring (M/T)**
8. **Transfer input gear**
   - Use the universal puller to remove the high-low sleeve and hub (A/T) or High-low synchronizer assembly (M/T), High-low block ring (M/T), and transfer input gear (Fig. 7D-42).

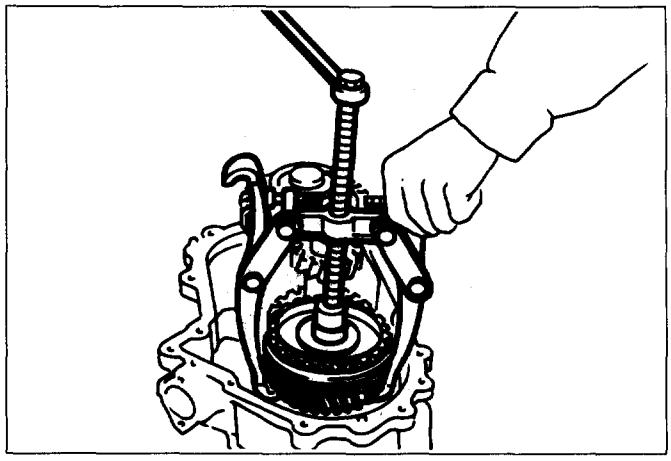

Fig. 7D-42

9. **Needle bearing**
10. **Bearing collar (Fig. 7D-43)**
11. **Ball**
12. **Plate**

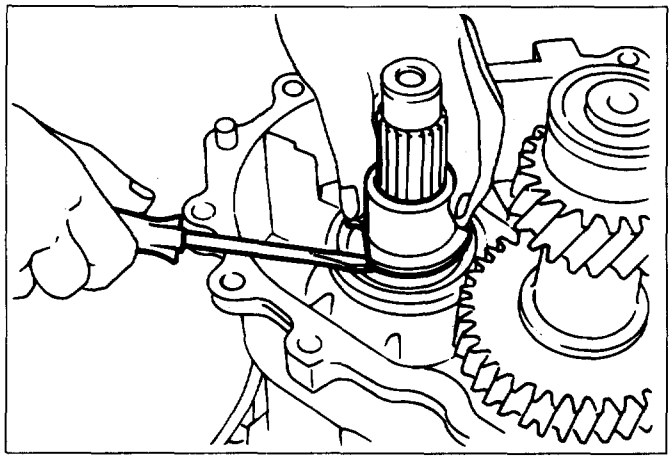

Fig. 7D-43

13. **Ball bearing (A/T)**
    - Use a bench press and the ball bearing remover to remove the ball bearing (Fig. 7D-44).

      Bearing remover: J-22912-01

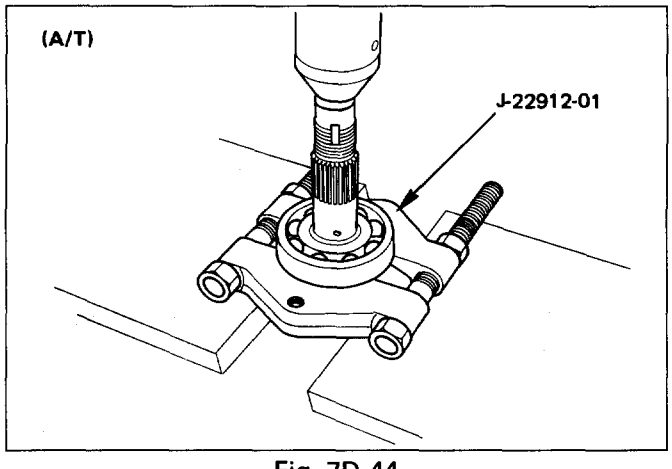

Fig. 7D-44

14. **Input shaft (A/T)**
15. **Bearing snap ring**
16. **Front output gear assembly**
    - Use a pair of snap ring pliers to expand the bearing snap ring.
    - Use a plastic hammer to tap the front output gear assembly free (Fig. 7D-45).

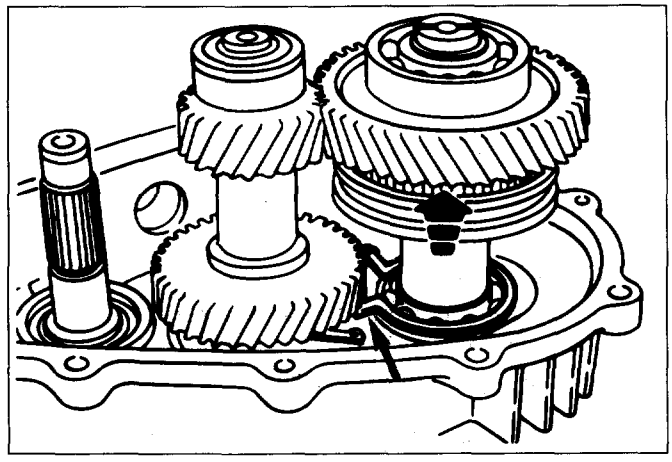

Fig. 7D-45

17. **Bearing snap ring**
18. **Ball bearing**
19. **Bearing collar**
20. **Sub-gear snap ring (M/T)**
21. **Spacer (M/T)**
22. **Belleville spring (M/T)**
23. **Sub-gear (M/T)**
24. **Front output gear**
25. **Needle bearing**
    - Use a bench press and the bearing remover to remove the parts above (Fig. 7D-46).

      Bearing remover: J-22912-01

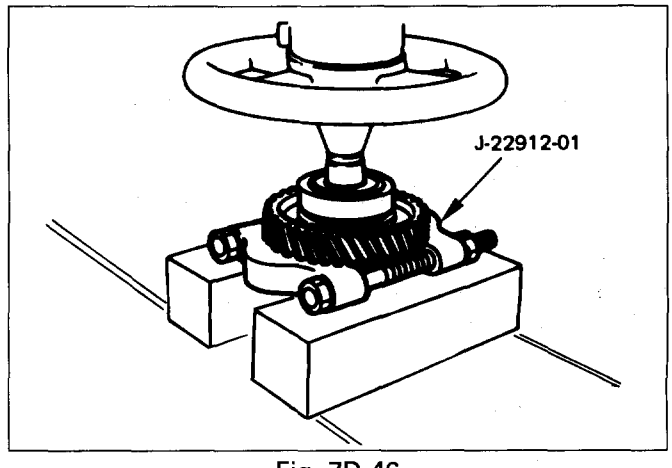

Fig. 7D-46

26. **Clutch sleeve and hub**
    - Use a bench press to remove the clutch sleeve and hub (Fig. 7D-47).

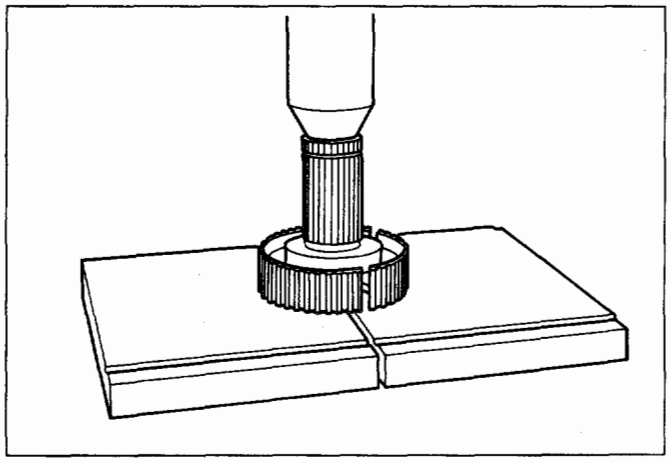

Fig. 7D-47

27. Ball bearing

- Use the bearing remover to remove the ball bearing (Fig. 7D-48).

  Bearing remover: J-22912-01

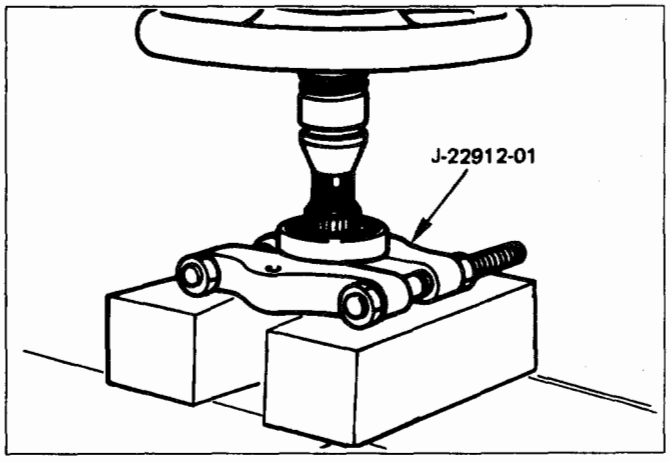

Fig. 7D-48

28. Front output shaft

29. Bearing snap ring

30. Counter gear assembly

- Remove the counter gear assembly from the transfer case.

31. Snap ring

- Use a pair of snap ring pliers to remove the snap ring.

32. Ball bearing

- Use a bench press and the bearing remover to remove the ball bearing.

  Bearing remover: J-22912-01

33. Snap ring

- Use a pair of snap ring pliers to remove the snap ring.

34. Ball bearing

- Use a bench press and the bearing remover to remove the ball bearing (Fig. 7D-49).

Bearing remover: J-22912-01

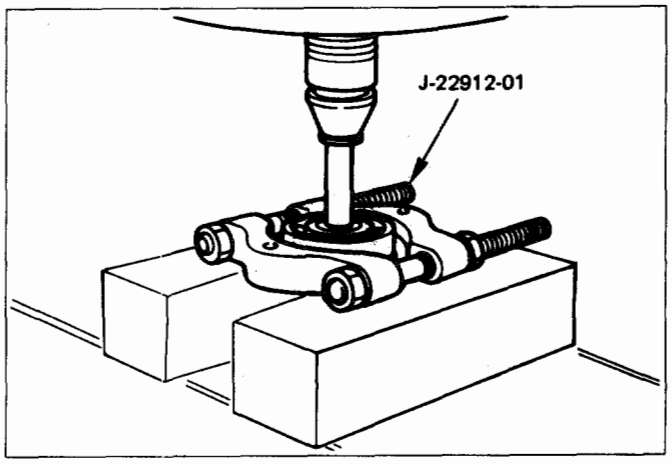

Fig. 7D-49

35. Spacer

36. Belleville spring

37. Sub-gear

38. Counter gear

39. Transfer case (with oil seal)

- Cover the shaft splines with adhesive tape ①. This will prevent damage to the oil seal lip ② (M/T) (Fig. 7D-49a).
- Remove the transfer case together with intermediate plate with gear assembly from the transmission case (M/T).
- Remove the transfer case from the intermediate plate with gear assembly (M/T).

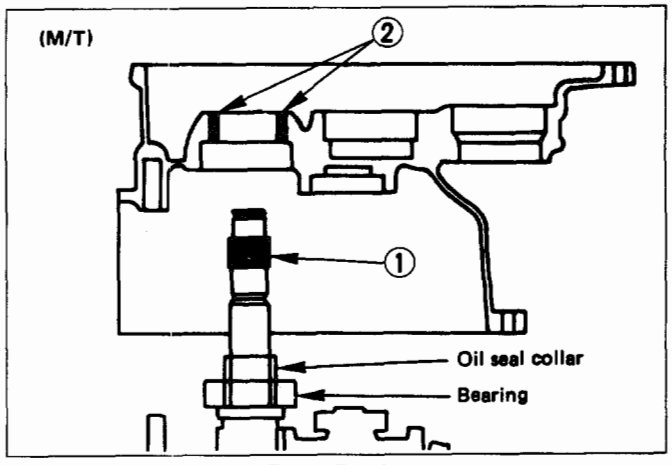

Fig. 7D-49a

INSPECTION AND REPAIR

Make the necessary repair or parts replacement if wear, damage or any other abnormal conditions are found during inspection.

Wash all parts thoroughly in clean solvent. Be sure all old lubricant, metallic particles, dirt, or foreign material are removed from the surfaces of every part. Apply compressed air to each oil feed port and channel in each case half to remove any obstructions or cleaning solvent residue.

GEARS

- Inspect all gear teeth for signs of excessive wear or damage and check all gear splines for burrs, nicks, wear or damage. Remove minor nicks or scratches on an oil stone. Replace any part exhibiting excessive wear or damage.

GEAR INSIDE DIAMETER (Fig. 7D-50)

- Use an inside dial indicator to measure the gear inside diameter.
- If the measured value exceeds the specified limit, the gear must be replaced.

Gear inside diameter	mm (in)
Standard	48.000 — 48.013 (1.8898 — 1.8903)
Limit	48.10 (1.894)

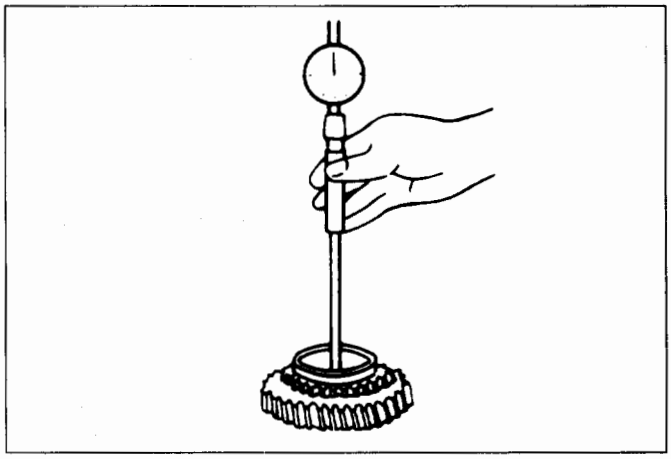

Fig. 7D-50

CLUTCH HUB SPLINE PLAY (Fig. 7D-51)

- Set a dial indicator to the clutch hub to the measured.
- Move the clutch hub as far as possible to both the right and the left.
  Note the dial indicator reading.
- If the measured value exceeds the specified limit, the clutch hub must be replaced.

Clutch hub spline play	mm (in)
Standard	0 — 0.1 (0 — 0.004)
Limit	0.2 (0.008)

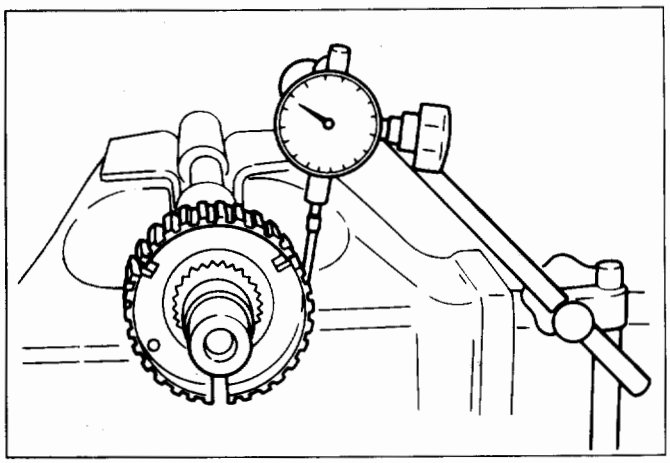

Fig. 7D-51

BEARINGS

- Inspect the condition of all needles, and ball bearings. Wash bearings thoroughly in a cleaning solvent. Apply compressed air to bearings.

NOTE:
Do not allow the bearings to spin. Turn them slowly by hand. Spinning bearings may damage the rollers.
Lubricate bearings with a light oil and check them for roughness by slowly turning the race by hand.

BALL BEARING PLAY (Fig. 7D-52)

- Use a dial indicator to measure the ball bearing play.
- If the measured value exceeds the specified limit, the ball bearing must be replaced.

Limit	mm (in)	0.2 (0.008)

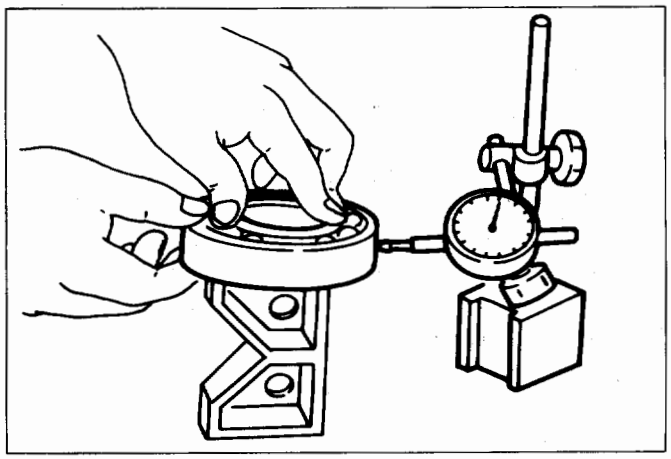

Fig. 7D-52

SYNCHRONIZERS (M/T)

The synchronizer hubs and sliding sleeves are a selected assembly and should be kept together as originally assembled.
Clean synchronizer components with clean solvent and air dry.

Inspect the components for the following:

- Teeth for wear, scuffs, nicks, burrs or breaks.
- Keys and springs for wear, cracks or distortion, replace if these conditions are present.
- If scuffed, nicked or burred conditions cannot be corrected with a soft stone or crocus cloth, replace the component.

BLOCK RING AND INSERT CLEARANCE (Fig. 7D-53)

- Use a vernier caliper to measure the clearance between the block ring and the insert.
- If the measured value exceeds the specified limit, the block ring and the insert must be replaced.

Block ring and insert clearance mm (in)

Standard	4.34 — 4.66 (0.171 — 0.183)
Limit	4.9 (0.193)

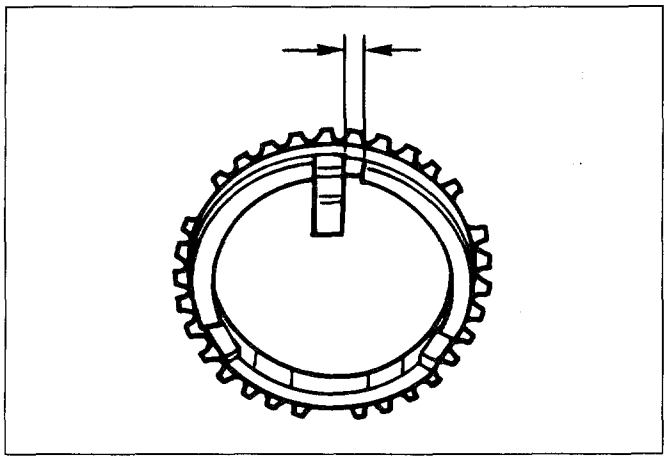

Fig. 7D-53

BLOCK RING AND DOG TEETH CLEARANCE (Fig. 7D-54)

- Use a thickness gauge to measure the clearance between the block ring and the dog teeth.
- If the measured value exceeds the specified limit, the block ring must be replaced.

Block ring and dog teeth clearance mm (in)

Standard	1.5 (0.059)
Limit	0.8 (0.031)

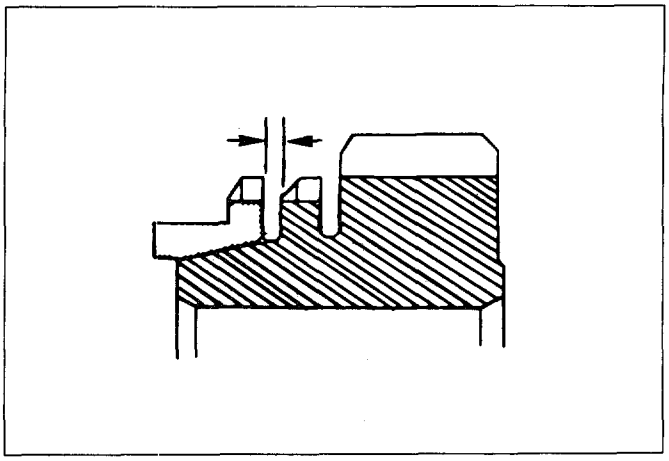

Fig. 7D-54

CLUTCH HUB AND INSERT CLEARANCE (Fig. 7D-55)

- Use a thickness gauge to measure the clearance between the clutch hub and the insert.
- If the measured value exceeds the specified limit, the clutch hub and the insert must be replaced.

Clutch hub and insert clearance mm (in)

Standard	0.09 — 0.31 (0.0035 — 0.0122)
Limit	0.4 (0.0157)

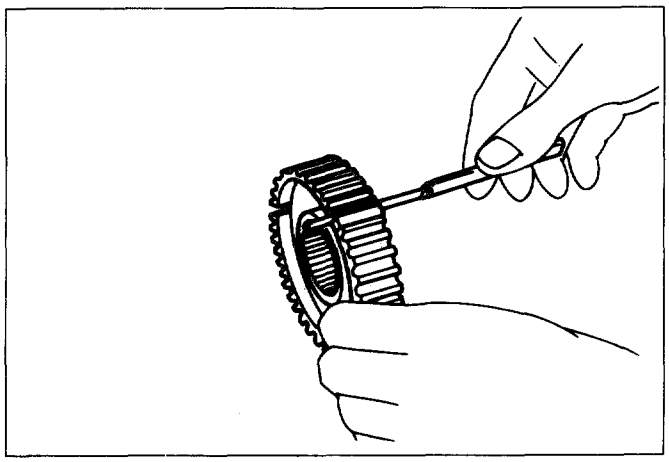

Fig. 7D-55

DETENT SPRINGS

- Inspect the springs for distortion, cracks or wear. Replace if these conditions are present.

DETENT SPRING FREE LENGTH (Fig. 7D-56)

- Use a vernier caliper to measure the detent spring free length.
- If the measured value is less than the specified limit, the detent spring must be replaced.

Detent spring free length mm (in)

	Standard	Limit
Detent ball	25.6 (1.008)	25.0 (0.984)
Interlock pin	1.59 (0.063)	1.53 (0.060)

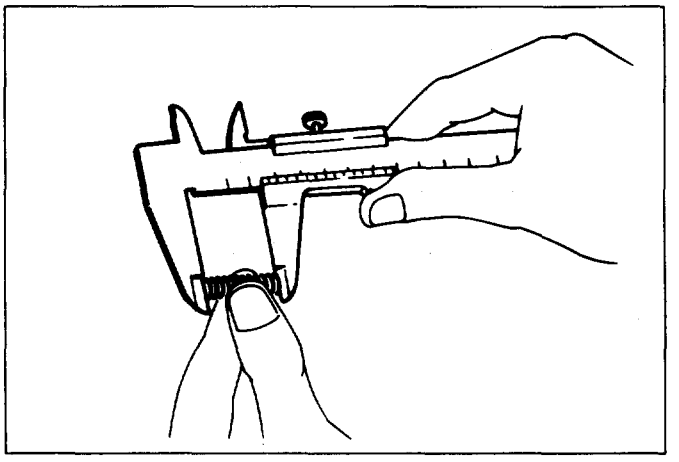

Fig. 7D-56

DETENT SPRING TENSION (Fig. 7D-57)

- Use a spring tester to measure the detent spring tension.
- If the measured value is less than the specified limit, the detent spring must be replaced.

Detent spring tension

	Compressed height mm(in)	Standard N (lb)
Detent ball	20.5 (0.807)	65 — 75 (14.6 — 16.8)
Interlock pin	11.5 (0.453)	9.8 (2.2)

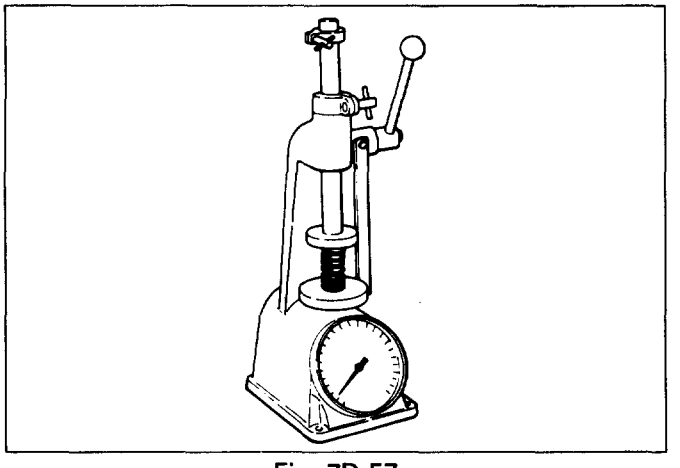

Fig. 7D-57

SHIFT ARM

- Inspect the shift arms for wear, distortion or scoring. Replace if these conditions are present.

SHIFT ARM THICKNESS (Fig. 7D-58)

- Use a micrometer to measure the shift arm thickness.
- If the measured value is less than the specified limit, the shift arm must be replaced.

Shift arm thickness	mm (in)
Standard	9.60 — 9.85 (0.378 — 0.388)
Limit	9.0 (0.354)

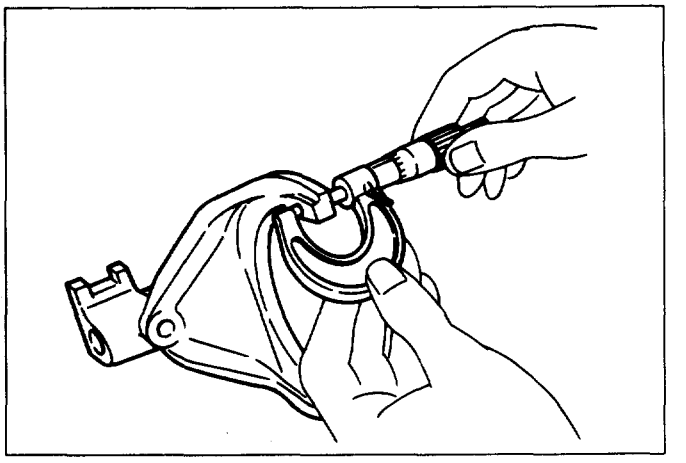

Fig. 7D-58

REASSEMBLY

39. Transfer case (with oil seal)

Oil seal replacement

Input shaft oil seal:

- Remove the oil seal from the transfer case.
- Apply engine oil to the oil seal outer surfaces.
- Apply recommended grease (BESCO L2) or equivalent to the oil seal lip.
- Use the oil seal installer to install the oil seal to the transfer case (Fig. 7D-59 & Fig. 7D-60).

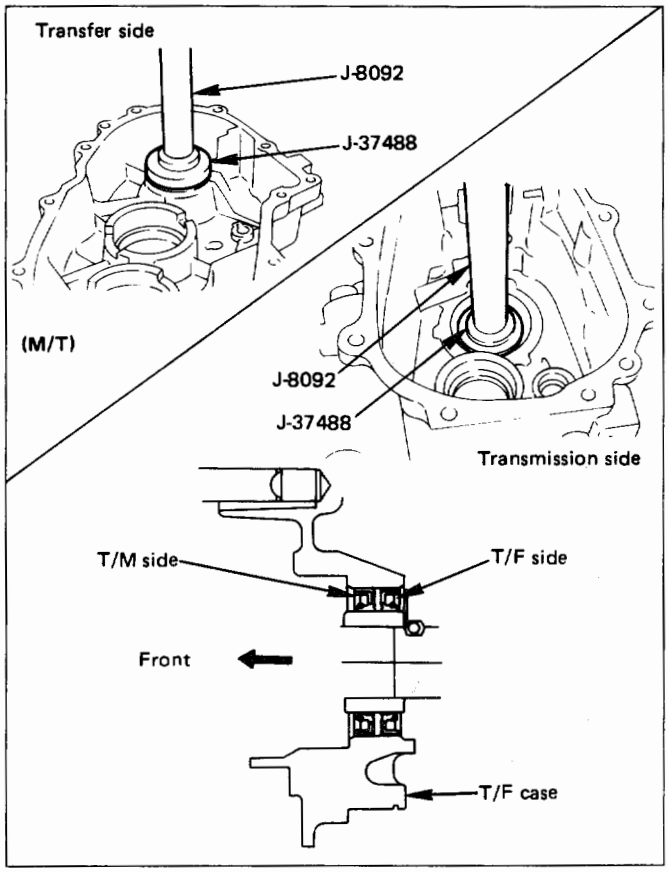

Fig. 7D-59

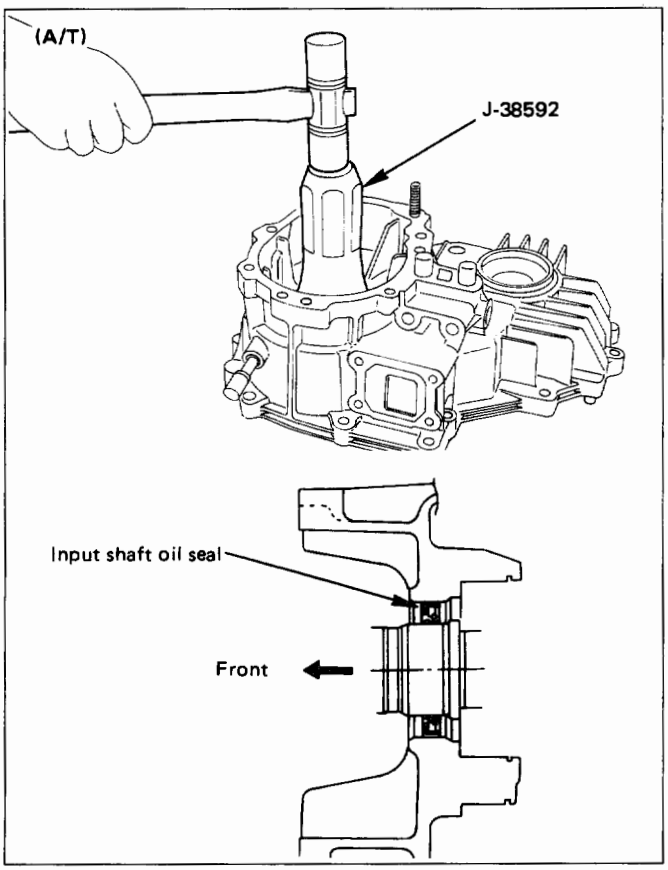

Fig. 7D-60

Oil seal installer: J-37488 } M/T
Driver handle: J-8092 }
Oil seal installer: J-38592 (A/T)

Front output shaft oil seal:

- Remove the oil seal from the transfer case.
- Apply engine oil to the oil seal outer surfaces.
- Apply recommended grease (BESCO L2) or equivalent to the oil seal lip.
- Use the oil seal installer to install the oil seal to the transfer case (Fig. 7D-61).

  Oil seal installer: J-38594
- Cover the shaft splines with adhesive tape ①. This will prevent damage to the oil seal lip ② (M/T) (Fig. 7D-62).

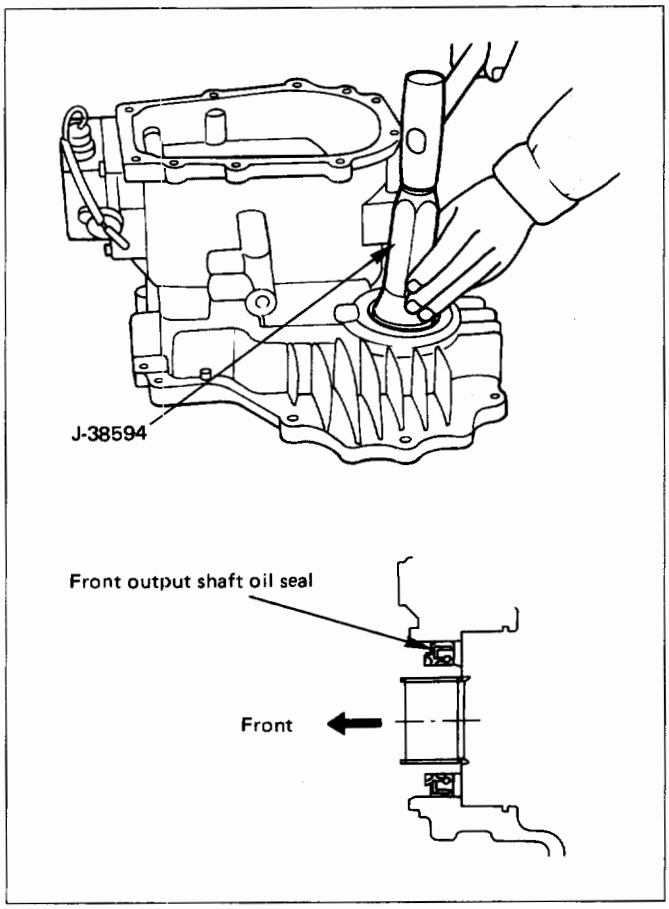

Fig. 7D-61

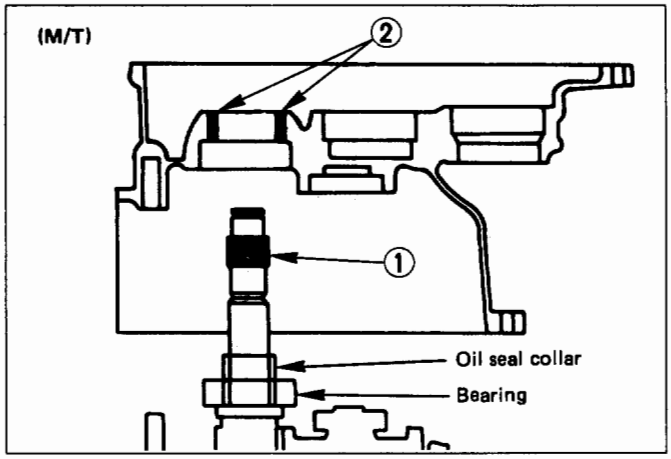

Fig. 7D-62

- Apply recommended liquid gasket (LOCTITE FMD 127) or its equivalent to the transmission, intermediate plate and transfer case fitting surfaces (M/T) (Fig. 7D-63).
- Install the transfer case together with intermediate plate with gear asssembly to transmission case (M/T).
- Tighten the transfer case bolts to the specified torque a little at a time (M/T).

Torque N·m (lb·ft)	37 (27)

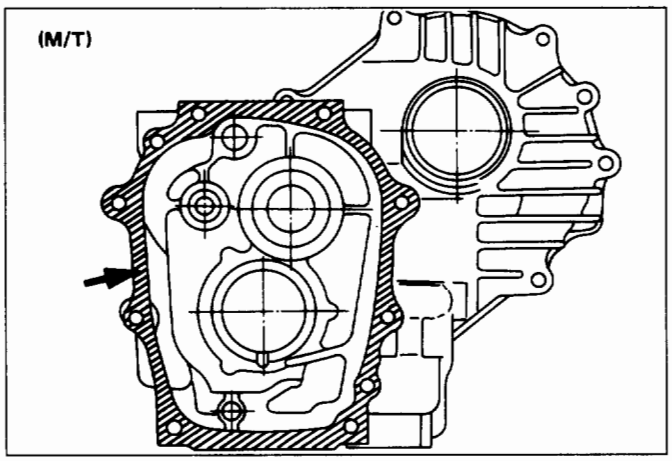

Fig. 7D-63

38. Counter gear

37. Sub-gear

- Apply chassis grease to the sub-gear and the counter gear thrust surfaces (Fig. 7D-64).

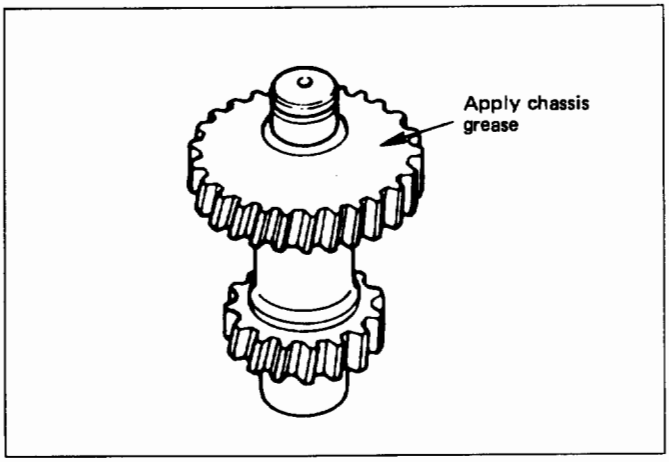

Fig. 7D-64

36. Belleville spring

35. Spacer

34. Ball bearing

33. Snap ring

- Select a snap ring that will allow the minimum axial play (Fig. 7D-65 & 7D-66).

Clearance mm (in)	0 — 0.1 (0 — 0.004)

Snap ring availability (Fig. 7D-66) mm (in)

Thickness	Color-Coding
1.50 (0.059)	White
1.55 (0.061)	Yellow
1.60 (0.063)	Blue

- Use a pair of snap ring pliers to install the snap ring to the counter gear.

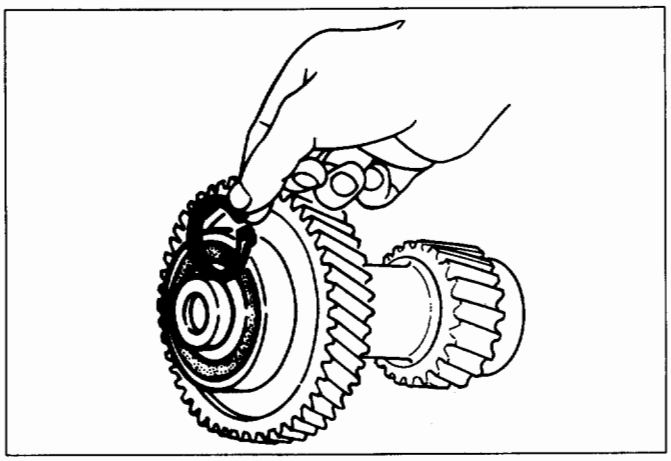

Fig. 7D-65

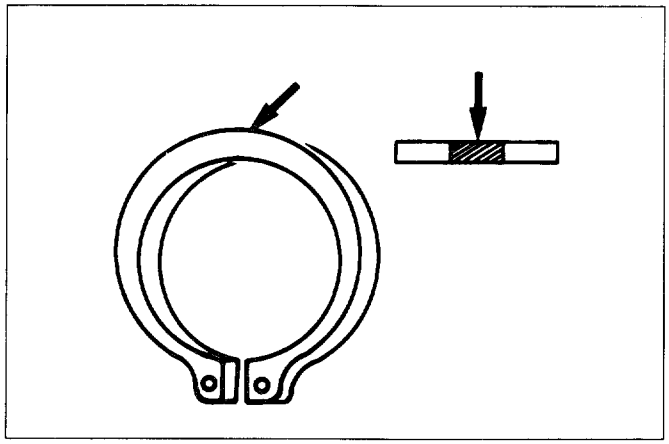

Fig. 7D-66

Sub Gear Preload (Fig. 7D-67)

- Hook a length of piano wire over one of the sub-gear teeth.
- Attach the other end of the piano wire to a spring balancer.
- Measure the sub-gear preload.

Preload	N (lb)	59–98 (13–22)

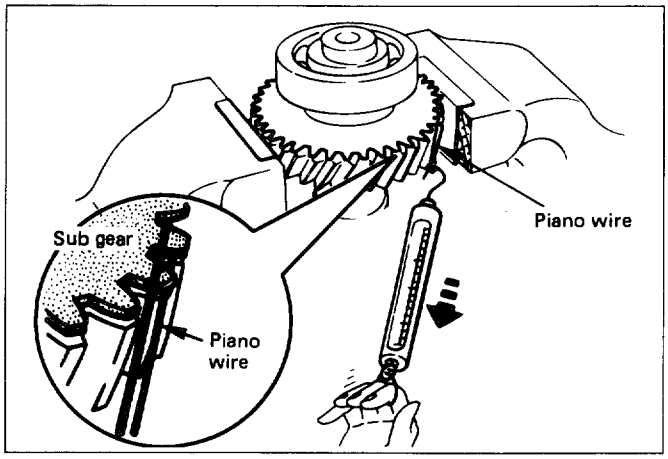

Fig. 7D-67

32. Ball bearing

31. Snap ring

30. Counter gear assembly
- Install the counter gear assembly to the transfer case.

29. Bearing snap ring
- Use a pair of snap ring pliers to install the snap ring to the transfer case.

NOTE:
The snap ring must be fully inserted into the transfer case snap ring groove.

28. Front output shaft

27. Ball bearing
- Use a bench press to install the ball bearing to the front output shaft (Fig. 7D-68).

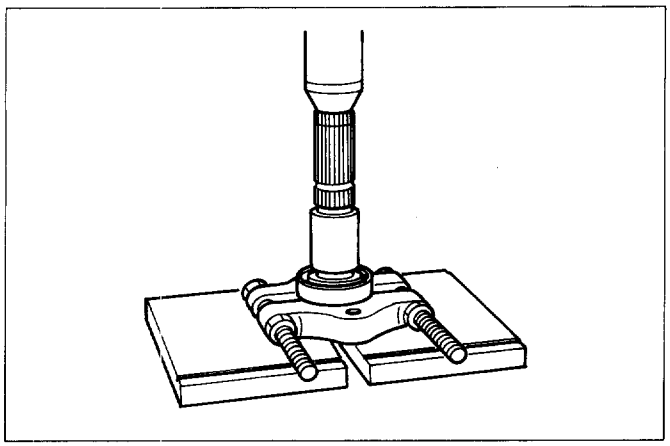

Fig. 7D-68

26. Clutch hub and sleeve
- Use a bench press to install the clutch hub to the front output shaft (Fig. 7D-69).

25. Needle bearing

24. Front output gear

23. Sub-gear (M/T)

22. Belleville spring (M/T)

21. Spacer (M/T)
- Apply engine oil to the thrust surfaces of the sub-gear, the belleville spring, and the spacer (Fig. 7D-70).

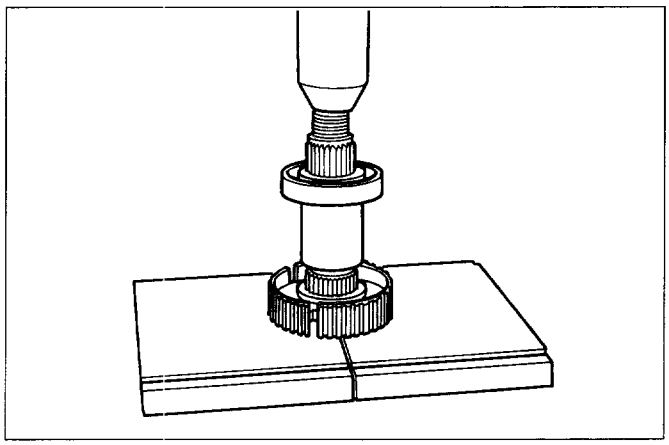

Fig. 7D-69

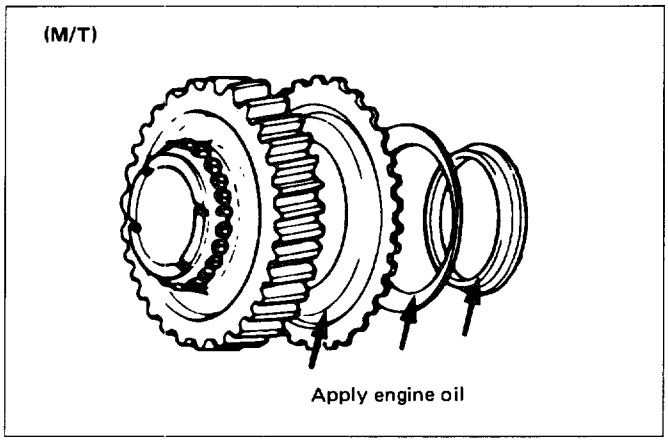

Fig. 7D-70

20. Sub-gear snap ring (M/T)

19. Bearing collar

- Use a bench press to install the needle bearing collar together with the front output gear (Fig. 7D-71).

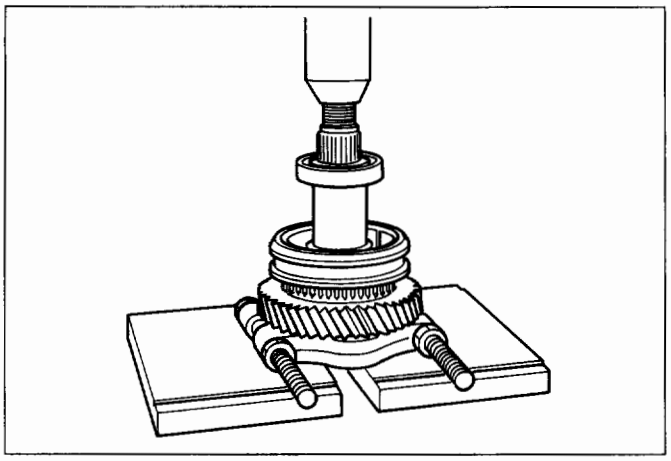

Fig. 7D-71

18. Ball bearing

17. Bearing snap ring

- Select a snap ring that will allow the minimum axial play (Fig. 7D-72 & Fig. 7D-73).

Clearance mm (in)	0 — 0.1 (0 — 0.004)

Snap ring availability mm (in)

Snap ring thickness	Color coding
1.55 (0.061)	White
1.60 (0.063)	Yellow
1.65 (0.065)	Blue
1.70 (0.067)	Pink
1.75 (0.069)	Green
1.80 (0.071)	Brown
1.85 (0.073)	Red
1.90 (0.075)	Orange

- Use a pair of snap ring pliers to install the snap ring to the output shaft.

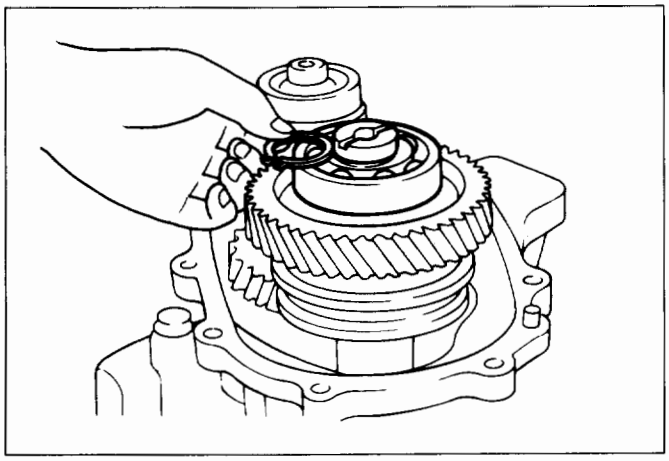

Fig. 7D-72

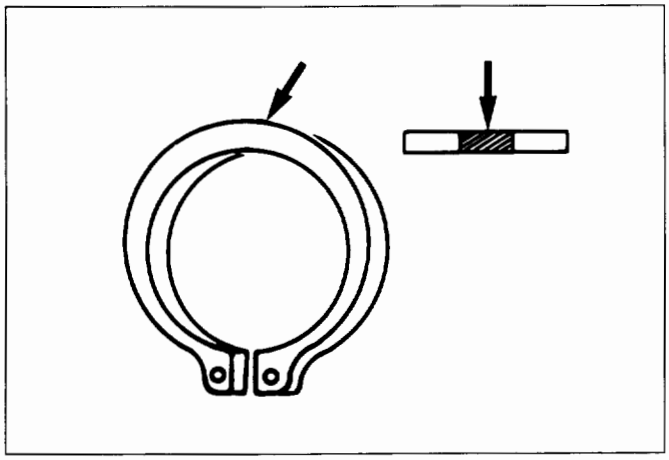

Fig. 7D-73

Sub gear preload M/T (Fig. 7D-74)

- Hook a length of piano wire over one of the sub-gear teeth.
- Attach the other end of the piano wire to a spring balancer.
- Measure the sub-gear preload.

Preload	N (lb)	59 — 98 (13 — 22)

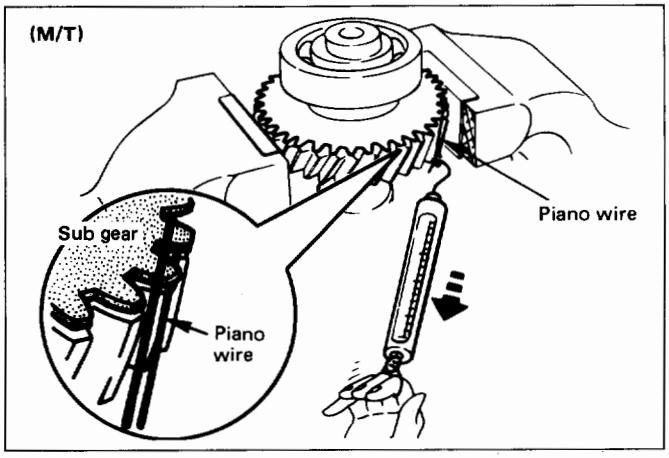

Fig. 7D-74

16. Front output gear assembly

15. Bearing snap ring

- Use a pair of snap ring pliers to install the snap ring to the transfer case.

NOTE:
The snap ring must be fully inserted into the transfer case snap ring groove.

14. Input shaft (A/T)

13. Ball bearing (A/T)

- Use a bench press to install the ball bearing to the input shaft (Fig. 7D-75).

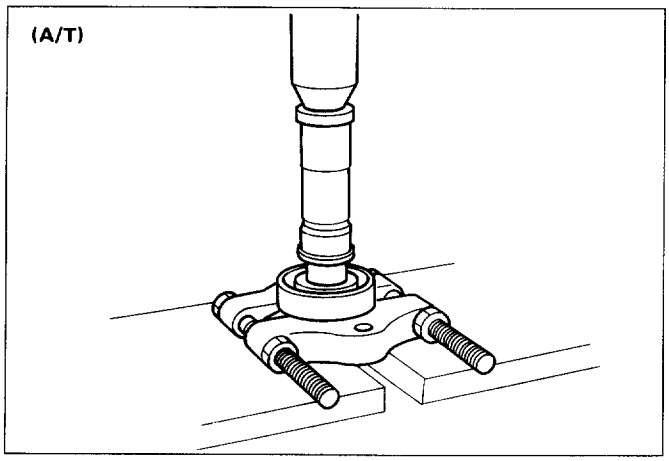

Fig. 7D-75

12. Plate

11. Ball

10. Bearing collar

9. Needle bearing

8. Transfer input gear

7. High-low block ring (M/T)

6. High-low sleeve & hub (A/T) or High-low synchronizer assembly (M/T)

- The clutch hub face (with the heavy boss) must be facing the transfer input gear side (Fig. 7D-76).
- The clutch hub groove Ⓐ must be aligned with the key groove of sleeve (M/T) (Fig. 7D-77).

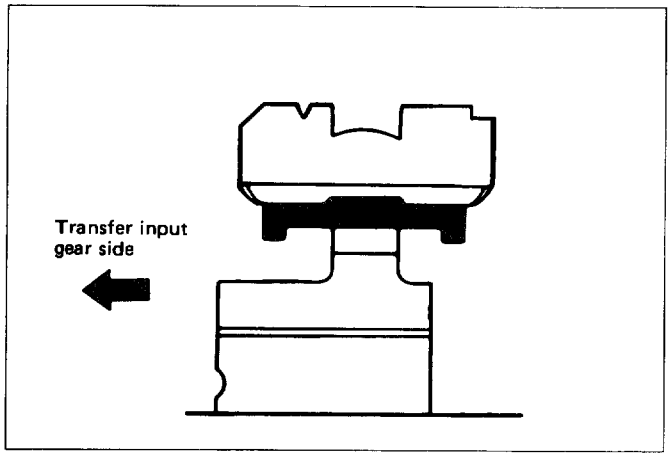

Fig. 7D-76

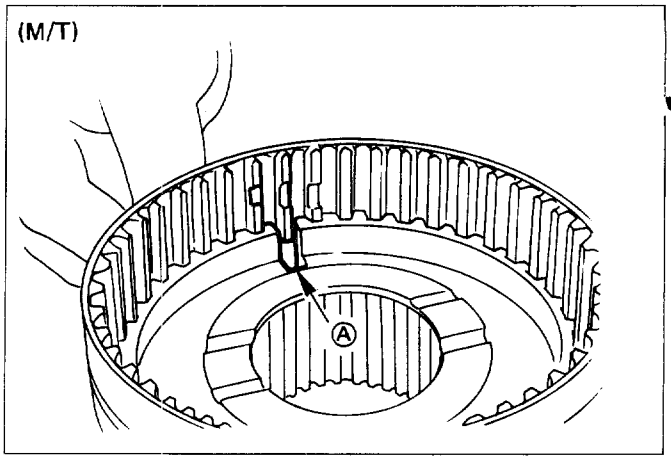

Fig. 7D-77

5. Input shaft assembly (A/T)

4. Snap ring (A/T)

- Install the snap ring to the input shaft.
- Install the input shaft assembly to the transfer case.
- Install the snap ring to the transfer case.

NOTE:
The snap ring must be fully inserted into the transfer case snap ring groove.

3. Lock nut

- Install the front companion flange temporarily.
- Use the flange holder and lock nut wrench to install the lock nut (Fig. 7D-78)

  Companion flange holder: J-37221

  Lock nut wrench: J-37219

Torque N·m (lb·ft)	137 (101)

- Use the punch to stake the lock nut at one spots.

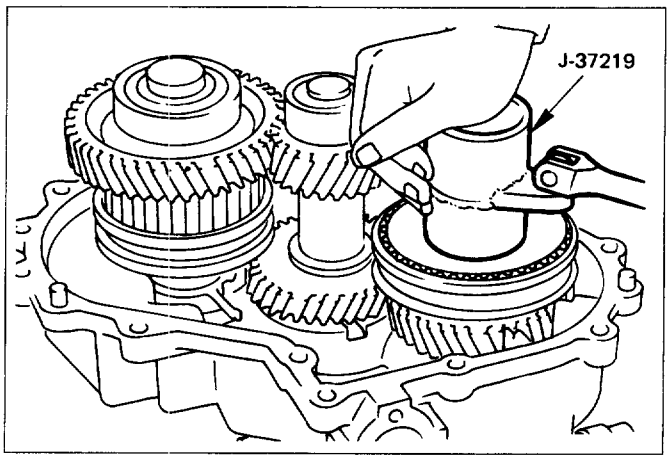

Fig. 7D-78

2. Ball bearing

- Use a suitable drift and hammer to install the ball bearing (Fig. 7D-79).

1. **Bearing snap ring**

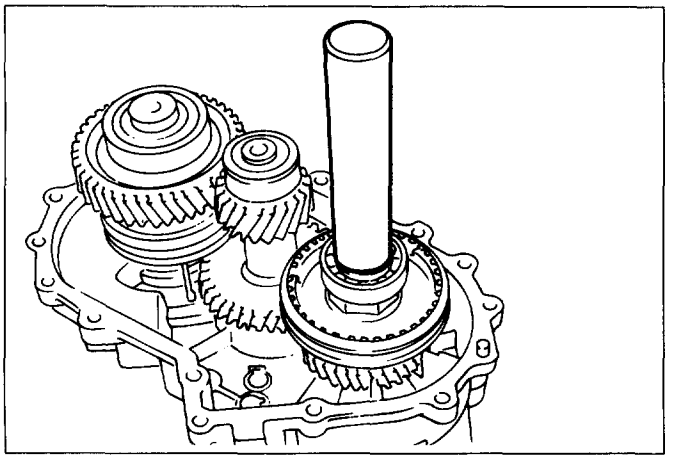

Fig. 7D-79

MAIN DATA AND SPECIFICATIONS

GENERAL SPECIFICATIONS

Type	Constant mesh type gears shifting between the 2 and 4 wheel drive mode. Synchronized type gear (M/T only) between "low" and "high".
Control method Gear ratio	Direct control with the gear shift lever on the floor. High; 1.000 Low ; 2.283
Oil capacity lit. (U.S. quart)	1.45 (1.53)
Type of lubricant	Engine oil Refer to chart in Section 0

TORQUE SPECIFICATIONS

N·m (lb·ft)

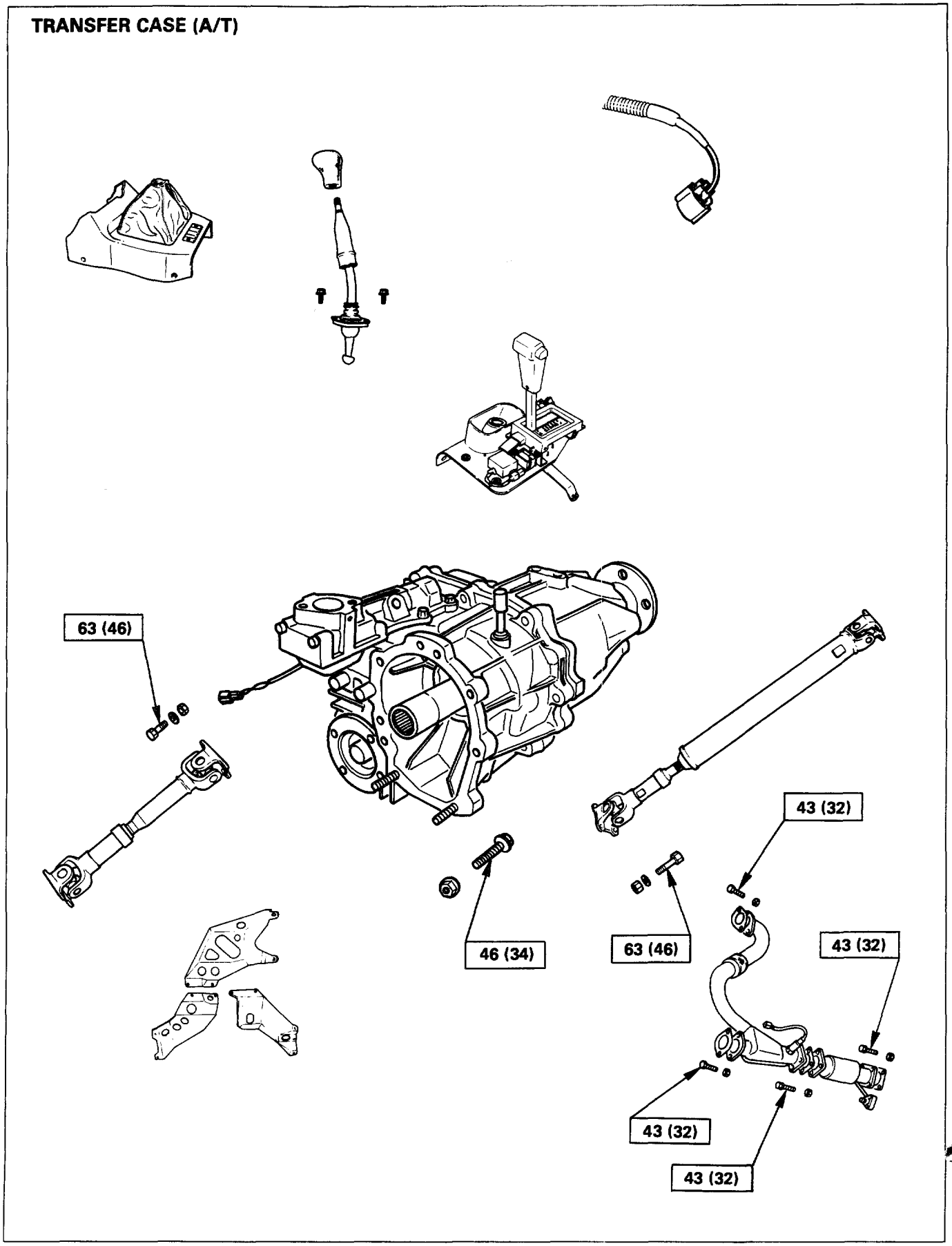

Fig. 7D-80

TORQUE SPECIFICATIONS

N·m (lb·ft)

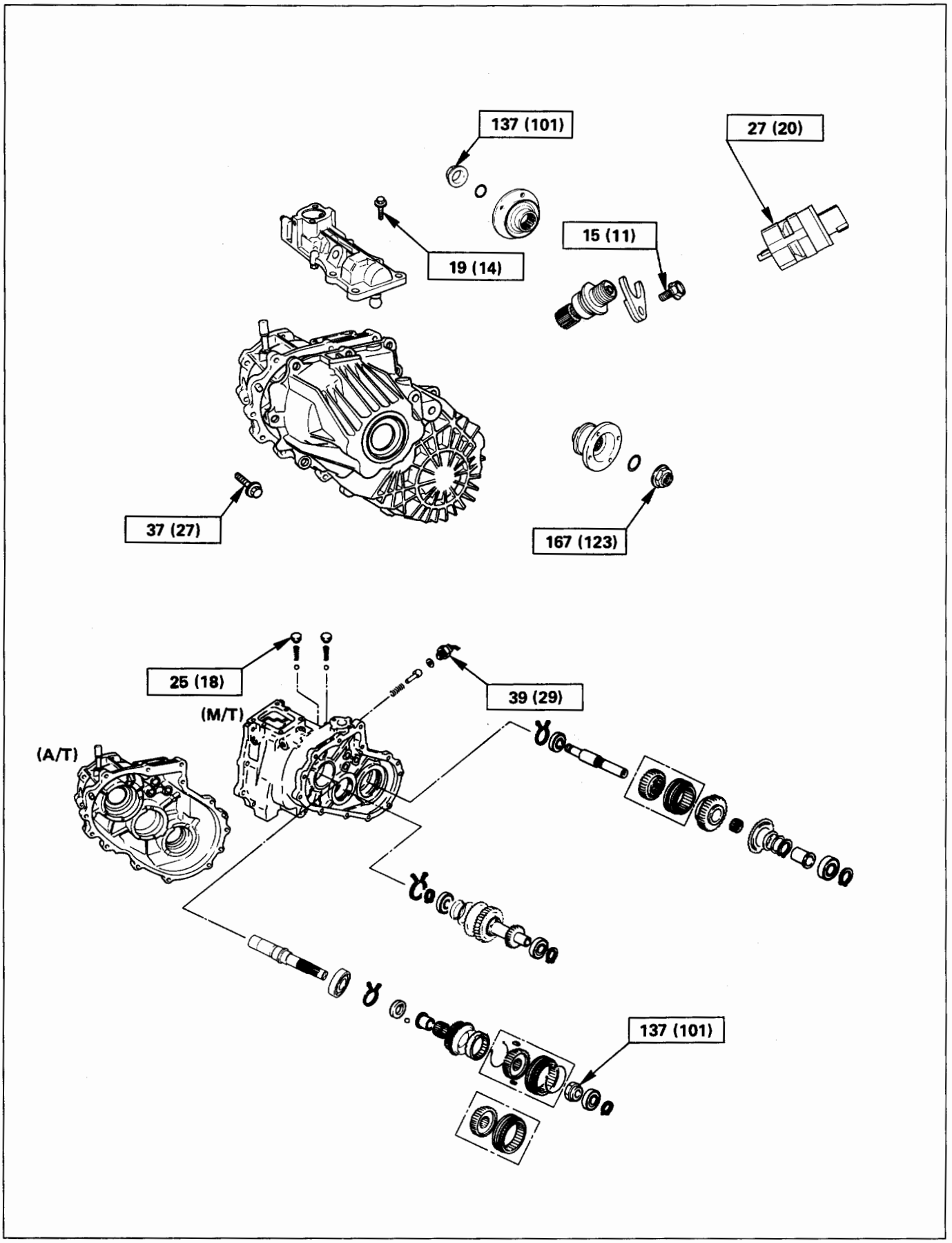

Fig. 7D-81

SPECIAL TOOLS

ILLUSTRATION	TOOL NO. TOOL NAME
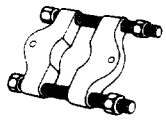	**J-22912-01** Bearing remover/installer
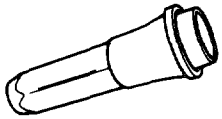	**J-38592** Transfer case oil seal installer (A/T)
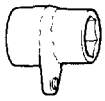	**J-37219** Mainshaft nut wrench
	J-37223 Rear output shaft end bearing installer
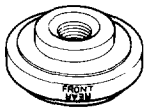	**J-37488** Transfer case oil seal installer (M/T)
	J-39209 Punch, end nut
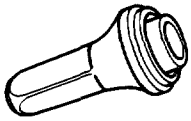	**J-38594** Front output shaft oil seal installer
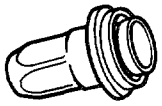	**J-39208** Rear oil seal installer
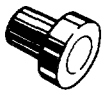	**J-37486** Bearing installer adapter

ILLUSTRATION	TOOL NO. TOOL NAME
	J-37221 Transfer flange holder
	J-37217 Mainshaft end bearing remover
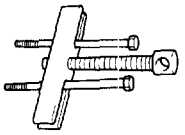	**J-8433** Puller
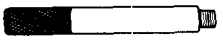	**J-8092** Driver handle

SECTION 8

CHASSIS ELECTRICAL

CAUTION:
When fasteners are removed, always reinstall them at the same location from which they were removed. If a fastener needs to be replaced, use the correct part number fastener for that application. If the correct part number fastener is not available, a fastener of equal size and strength (or stronger) may be used. Fasteners that are not reused, and those requiring thread locking compound, will be called out. The correct torque values must be used when installing fasteners that require it. If the above conditions are not followed, parts or system damage could result.

CONTENTS

General Information 8–2
Notes for Working on Electrical Items 8–2
Symbols and Abbreviations 8–8
Symbols 8–8
Abbreviations 8–9
Parts for Electrical Circuit 8–10
Wiring 8–10
Fuse 8–11
Fusible Link. 8–12
Circuit Breaker. 8–12
Relay 8–12
Relay Specifications and Configurations. 8–13
Diode 8–14
Connector 8–15
Reading the Circuit Diagram 8–17
Main Data and Specifications 8–19
Bulb Specifications 8–19
Fuse, Fusible Link and Circuit Breaker Location 8–21
Fuse Block Circuit 8–22
Reference Table of Fuse, Fusible Link and Circuit Breaker 8–23
Relay Location 8–27
Diode Location 8–28
Grounding Point 8–29
Reference Table 8–29
Location 8–31
Cable Harness Routing 8–34
System Repair 8–38
Start and Charging 8–38
Engine Control Module (ECM) 8–47
Headlight and Fog Light 8–58
Front Side Marker Light, Parking Light, Taillight, License Plate Light and Illumination Light 8–76
Stoplight and Rear Defogger 8–92
Turn Signal Light, Hazard Warning Light, Cornering Light, Backup Light and Horn 8–106
Dome Light, Luggage room Light, Courtesy Light, Map Light, Seat Belt Switch and Warning Buzzer 8–128
Power Door Lock 8–142
Power Window 8–156
Cruise Control 8–172
Anti-Lock Brake System (ABS) 8–178
Rear Wheel Anti-Lock Brake System (RWAL) 8–185
Transmission Control Module (TCM) 8–192
A/T Shift Lock 8–200
Windshield Wiper/Washer and Rear Wiper/Washer 8–205
Headlight wiper/washer 8–232
Audio, Auto Antenna, Cigarette Lighter and digital clock ... 8–246
Power Door Mirror 8–254
Anti-theft System 8–270
Meter and Warning/Indicator Light ... 8–288
A/T Shift Indicator 8–336
Heater and Air Conditioning 8–340
Sun Roof 8–346
Power Seat 8–360
Seat Heater 8–374
Supplemental Restraint System (SRS) – AIR BAG 8–382

GENERAL INFORMATION

The chassis electrical system is of 12-volt specifications with a negative ground polarity.
Wire sizes are appropriate to respective circuits, and classified by color. (The classification of harnesses by color is shown on the circuit diagram for ease of harness identification.)
The wire size is determined by load capacity and the length of wire required.
The vehicle harnesses are: body harness, chassis harness, engine room harness, instrument harness, transmission harness, engine ECGI harness, dome light harness, door harness, rear body harness, tailgate harness, SRS harness and battery cables.
The harnesses are protected either by tape or corrugated tube, depending on harness location.
The circuit for each system consists of the power source, wire, fuse, relay, switch, load parts and ground, all of which are shown on the circuit diagram.
In this manual, each electrical device is classified by system. For major parts shown on the circuit based on the circuit diagram for each system, a summary, diagnosis of troubles, inspection and removal and installation procedures are detailed.

NOTES FOR WORKING ON ELECTRICAL ITEMS

Disconnecting the Battery Cable (Fig. 8-1)

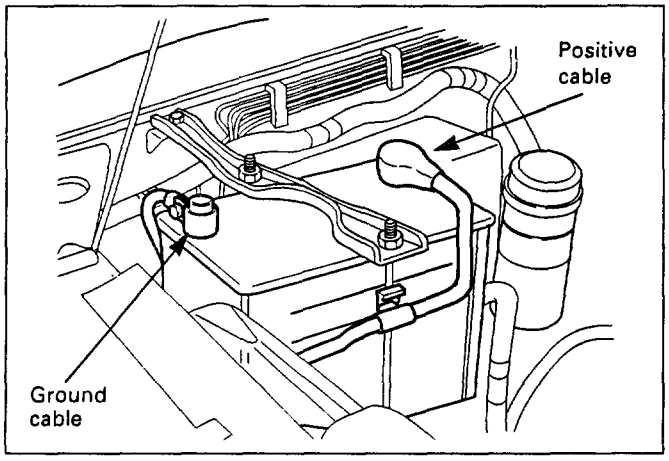

Fig. 8-1

1. All switches should be in the "OFF" position.
2. Disconnect the battery ground cable.
3. Disconnect the battery positive cable.

⚠ CAUTION:
It is important that the battery ground cable be disconnected first.
Disconnecting the battery positive cable first can result in a short circuit.

Connecting the Battery Cable

Follow the disconnecting procedure in the reverse order.

⚠ CAUTION:
Clean the battery terminal and apply a light coat of grease to prevent terminal corrosion.

Connector Handling

Disconnecting The Connectors (Fig. 8-2)

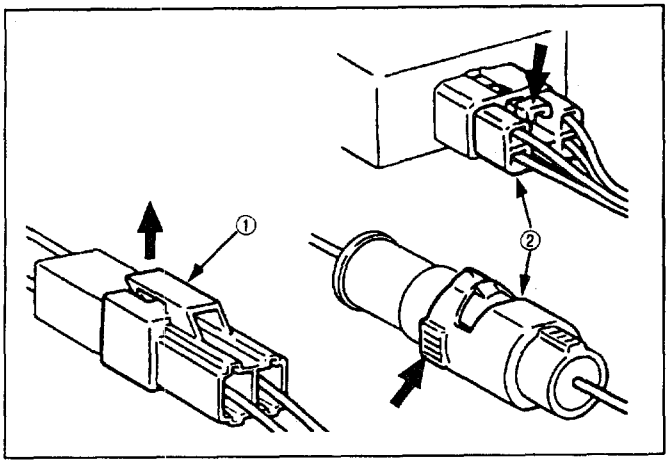

Fig. 8-2

Some connectors have a tang lock to hold the connectors together during vehicle operation.
Some tang locks are released by pulling them towards you ①.
Other tang locks are released by pressing them forward ②.
Determine which type of tang lock is on the connector being handled.
Firmly grasp both sides (male and female) of the connector.
Release the tang lock and carefully pull the two halves of the connector apart.
Never pull on the wires to separate the connectors. This will result in wire breakage (Fig. 8-3).

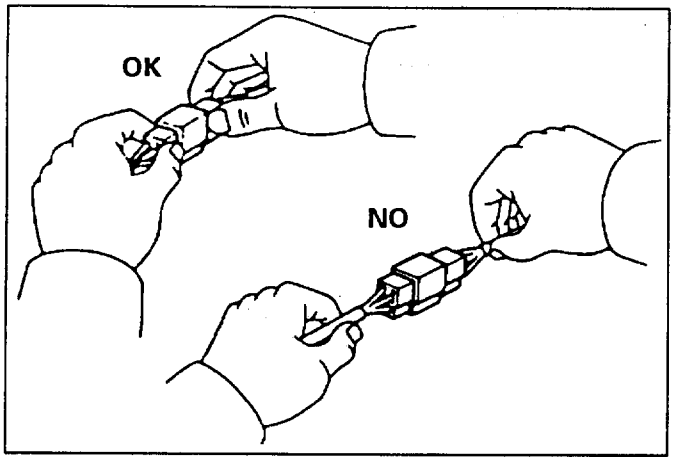

Fig. 8-3

- When removing the connector for relay (MR5B type), unfasten the tang lock of the connector by using a screwdriver, then pull the relay out. (Fig. 8-4)

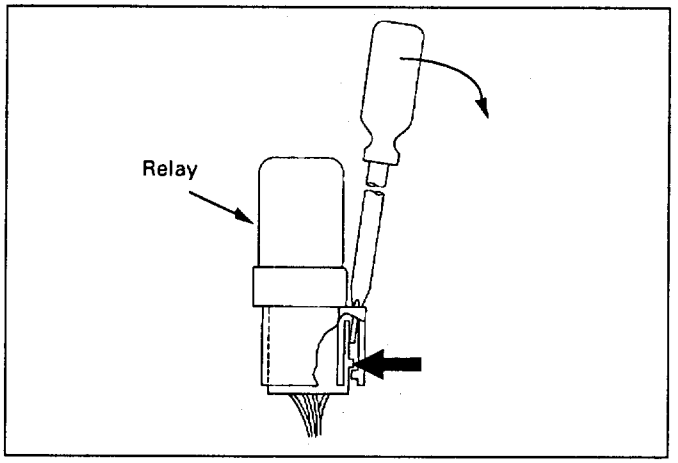

Fig. 8-4

Connecting the Connector (Fig. 8-5)

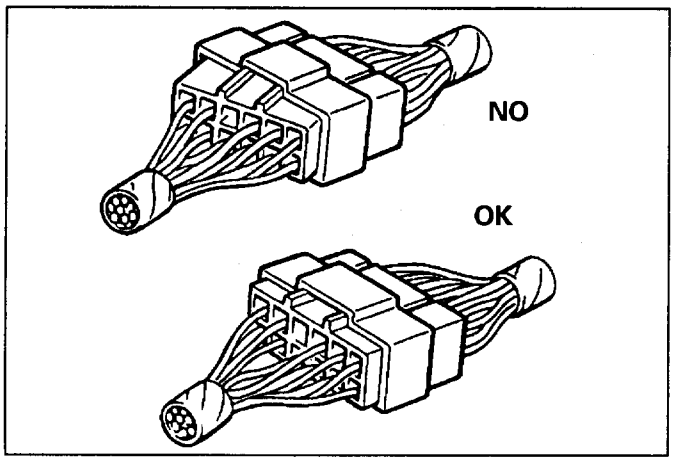

Fig. 8-5

Firmly grasp both sides (male and female) of the connector. Be sure that the connector pins and pin holes match. Be sure that both sides of the connector are aligned with each other.
Firmly but carefully push the two sides of the connector together until a distinct click is heard.

Connector Inspection (Fig. 8-6)

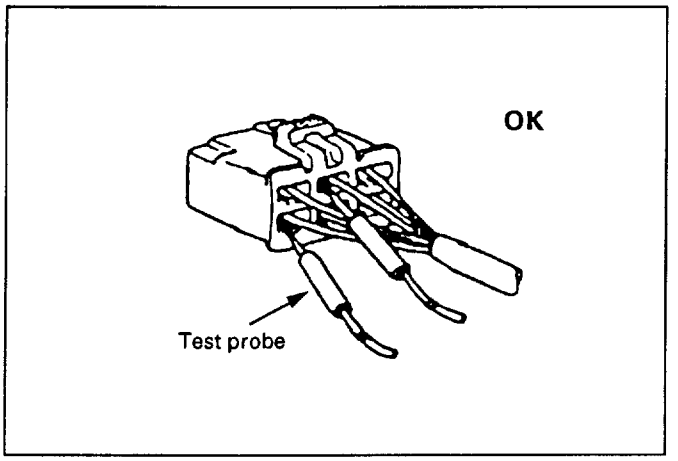

Fig. 8-6

Use a circuit tester to check the connector for continuity. Insert the test probes from the connector wire side.
Never insert the circuit tester test probes into the connector open end to test the continuity (Fig. 8-7). Broken or open connector terminals will result.

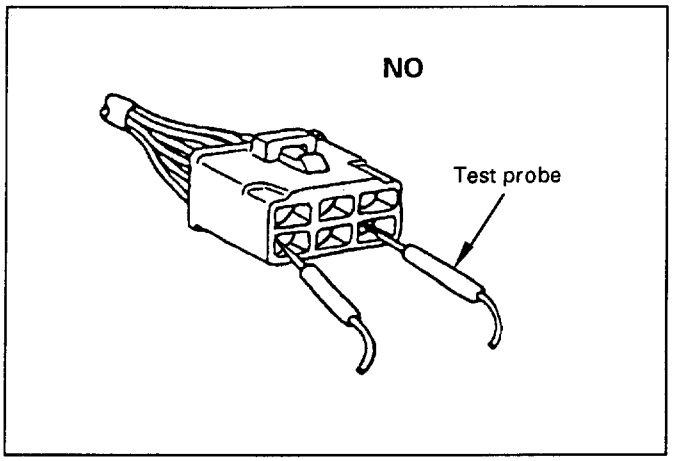

Fig. 8-7

Waterproof Connector Inspection (Fig. 8-8)

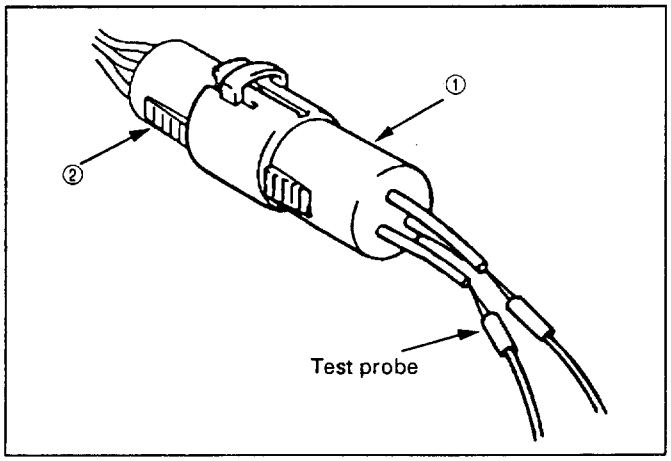

Fig. 8-8

It is not possible to insert the test probes into the connector wire side of a waterproof connector.
Use one side of a connector ① with its wires cut to make the test. Connect the test connector ② to the connector to be tested. Connect the test probes to the cut wires to check the connector continuity.

Connector Pin Removal

Connector Housing Tang Lock Type (Fig. 8-9)

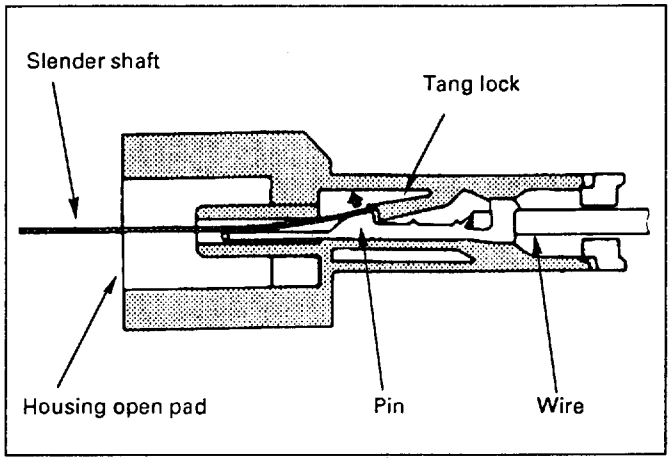

Fig. 8-9

1. Insert a slender shaft into the connector housing open end.
2. Push the tang lock up (in the direction of the arrow in the illustration). Pull the wire with pin free from the wire side of the connector.

Pin Tang Lock Type (Fig. 8-10)

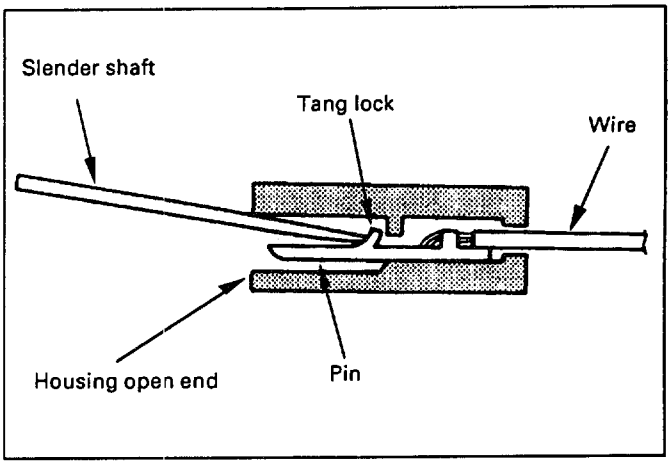

Fig. 8-10

1. Insert a slender shaft into the connector housing open end.
2. Push the tang lock flat (toward the wire side of the connector). Pull the wire with pin free from the wire side of the connector.

Connector Pin Insertion (Fig. 8-11)

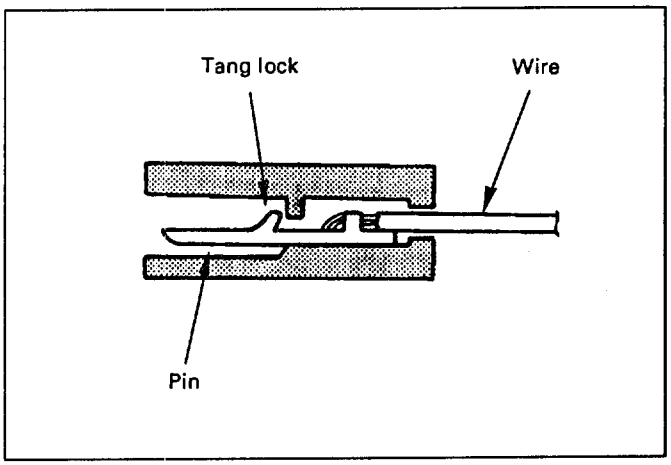

Fig. 8-11

1. Check that the tang lock is fully up.
2. Insert the pin from the connector wire side. Push the pin in until the tang lock closes firmly.
3. Gently pull on the wires to make sure that the connector pin is firmly set in place.

Parts Handling (Fig. 8-12)

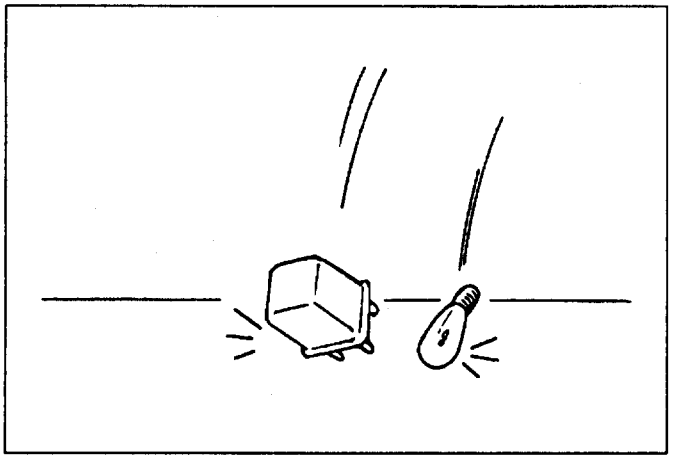

Fig. 8-12

Be careful when handling electrical parts. They should not be dropped or thrown, because short circuit or other damage may result.

Cable Harness

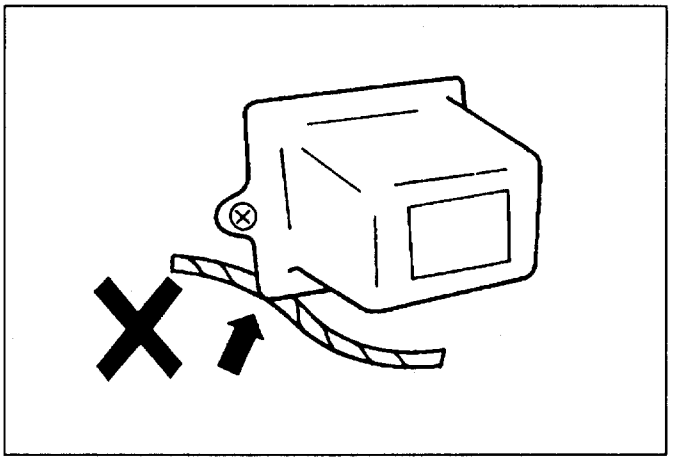

Fig. 8-13

1. When installing the parts, be careful not to pinch or wedge the wiring harness (Fig. 8-13).
2. All electrical connections must be kept clean and tight.
3. Use a grommet or guard tube to protect the wiring harness from contacting a sharp edge or surface (Fig. 8-14).

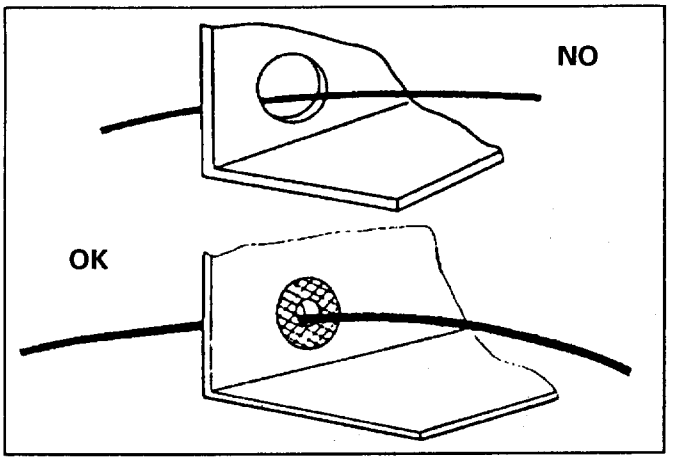

Fig. 8-14

4. Position the wiring harness with enough clearance from the other parts and guard the wiring harness with a vinyl tube and clips to avoid direct contact (Fig. 8-15).

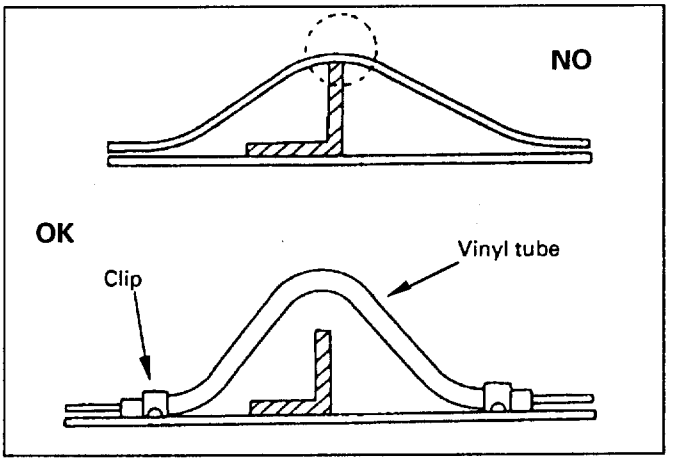

Fig. 8-15

5. The wiring harness between engine and chassis should be long enough to prevent chafing or damage due to various vibrations (Fig. 8-16).

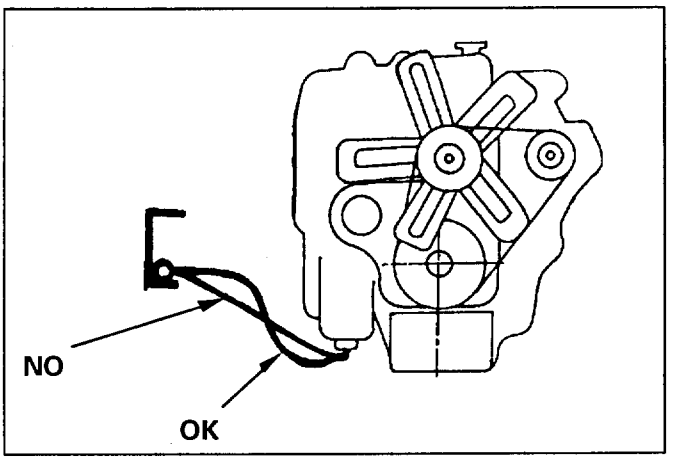

Fig. 8-16

SPLICING WIRE

1. Open the Harness

If the harness is taped, remove the tape. To avoid wire insulation damage, use a sewing "seam ripper" (available from sewing supply stores) to cut open the harness.

If the harness has a black plastic conduit, simply pull out the desired wire.

2. Cut the wire

Begin by cutting as little wire off the harness as possible. You may need the extra length of wire later if you decide to cut more wire off to change the location of a splice. You may have to adjust splice locations to make certain that each splice is at least 1-1/2" (40 mm) away from other splices, harness branches, or connectors.

3. Strip the insulation

When replacing a wire, use a wire of the same size as the original wire. Check the stripped wire for nicks or cut stands. If the wire is damaged, repeat the procedure on a new section of wire. The two stripped wire ends should be equal in length.

4. Crimp the Wires

Select the proper clip to secure the splice. To determine the proper clip size for the wire being spliced, follow the directions included with your clips. Select the correct anvil on the crimper. (On most crimpers your choice is limited to either a small or large anvil.) Overlap the two stripped wire ends and hold them between your thumb and forefinger (Fig. 8-17). Then, center the splice clip under the stripped wires and hold it in place.

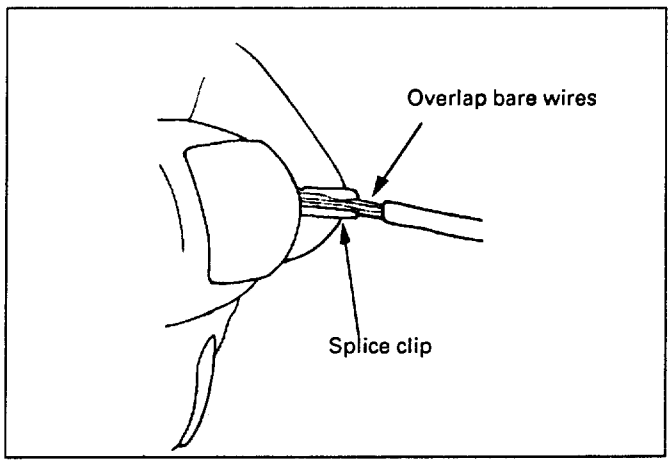

Fig. 8-17

- Open the crimping tool to its full width and rest one handle on a firm flat surface.
- Center the back of the splice clip on the proper anvil and close the crimping tool to the point where the back of the splice clip touches the wings of the clip.
- Make sure that the clip and wires are still in the correct position. Then, apply steady pressure until the crimping tool closes (Fig. 8-18).

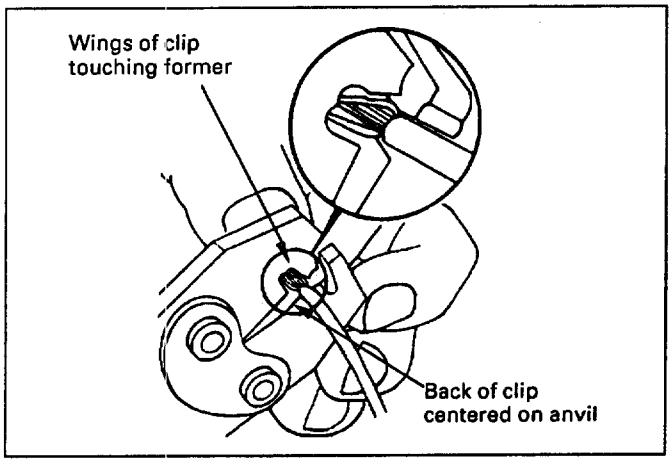

Fig. 8-18

Before crimping the ends of the clip, be sure that:

- The wires extend beyond the clip in each direction.
- No strands of wire are cut loose, and
- No insulation is caught under the clip.

Crimp the splice again, once on each end. Do not let the crimping tool extend beyond the edge of the clip or you may damage or nick the wires (Fig. 8-19).

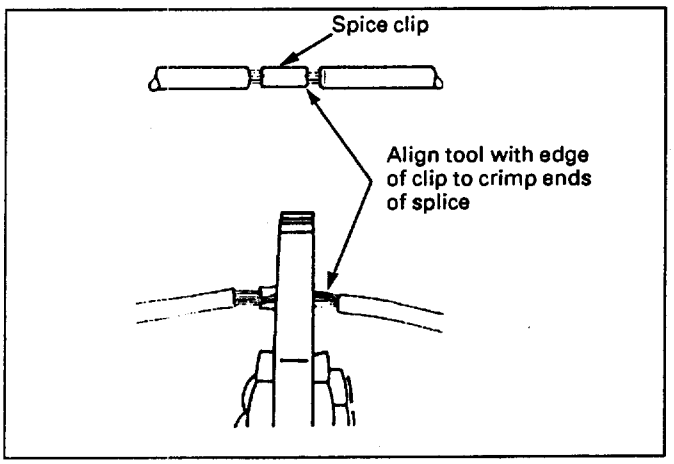

Fig. 8-19

5. Solder

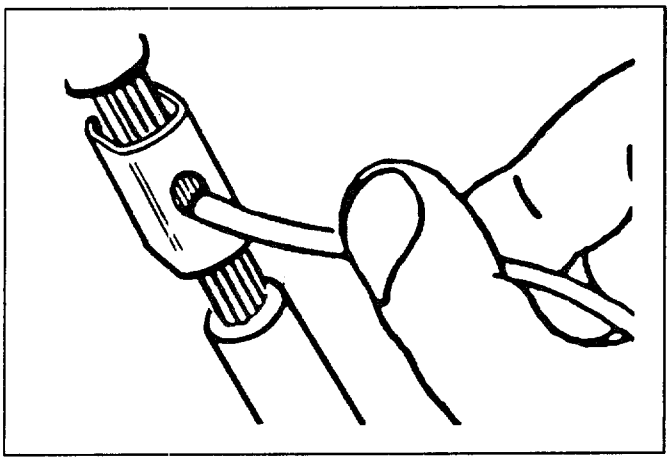

Fig. 8-20

Apply 60/40 rosin core solder to the opening in the back of the clip (Fig. 8-20). Follow the manufacturer's instructions for the solder equipment you are using.

6. Tape the Splice

Center and roll the splicing tape. The tape should cover the entire splice. Roll on enough tape to duplicate the thickness of the insulation on the existing wires. Do not flag the tape. Flagged tape may not provide enough insulation, and the flagged ends will tangle with the other wires in the harness (Fig. 8-21).

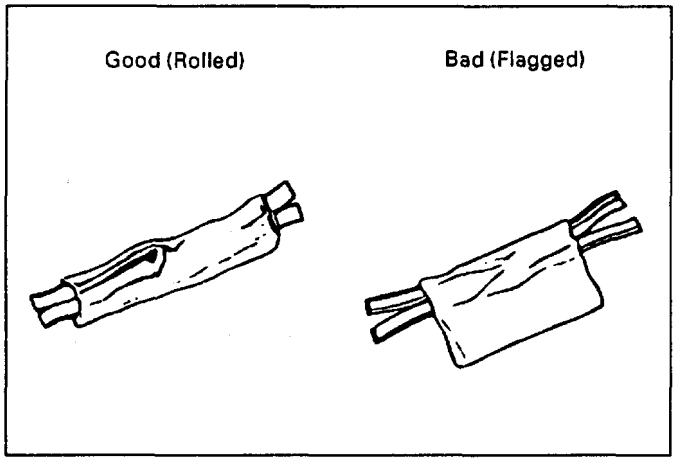

Fig. 8-21

If the wire does not belong in a conduit or other harness covering, tape the wire again. Use a winding motion to cover the first piece of tape (Fig. 8-22)

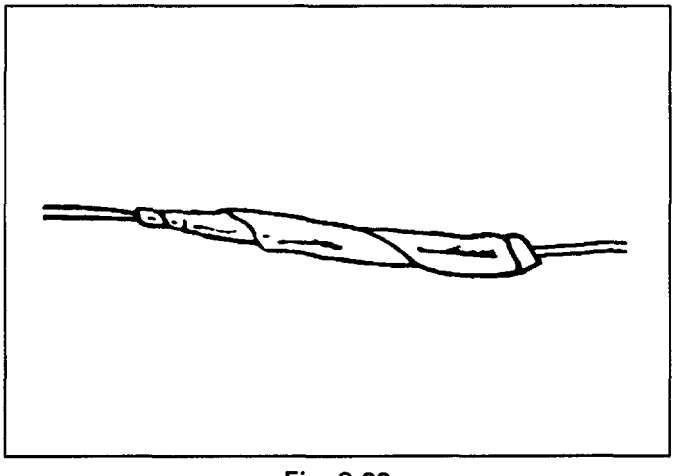

Fig. 8-22

SYMBOLS AND ABBREVIATIONS

SYMBOLS

Symbol	Meaning of Symbol	Symbol	Meaning of Symbol
	Fuse		Bulb
	Fusible link		Double filament bulb
	Fusible link wire	M	Motor
	Switch		Variable register Rheostat
	Switch		Coil (inductor), solenoid, magnetic valve
	Switch (Normal close type)		Relay
	Contact wiring		
+ −	Battery		
	Diode		Connector
	Electronic Parts		Light emitting diode
	Resistor		Reed switch
	Speaker		Condenser
	Buzzer		Horn
	Circuit breaker		Vacuum switching valve

Fig. 8-23

ABBREVIATIONS

Abbreviation	Meaning of Abbreviation	Abbreviation	Meaning of Abbreviation
A	Ampere (S)	LH	Left hand
ABS	Anti-lock brake system	LWB	Long wheel base
ASM	Assembly	M/T	Manual transmission
AC	Alternating current	OD	Over drive
A/C	Air conditioner	OPT	Option
ACC	Accessories	QOS	Quick on start
A/T	Automatic transmission	RH	Right hand
C/B	Circuit breaker	RR	Rear
CSD	Cold start device	RWAL	Rear wheel anti-lock brake system
DIS	Direct ignition system	SRS	Supplemental restraint system
EBCM	Electronic brake control module	ST	Start
ECGI	Electronic control gasoline injection	STD	Standard
ECM	Engine control module	SW	Switch
ECU	Electronic control unit	SWB	Short wheel base
EFE	Early fuel evaporation	TCM	Transmission control module
4A/T	4-speed automatic transmission	3A/T	3-speed automatic transmission
4X4	Four-wheel drive	V	Volt
FL	Fusible link	VSV	Vacuum switching valve
FRT	Front	W	Watt (S)
H/L	Headlight	WOT	Wide open throttle
IC	Integrated circuit	W/	With
IG	Ignition	W/O	Without
kW	kilowatt		

PARTS FOR ELECTRICAL CIRCUIT

WIRING

Wire Color (Fig. 8-24)

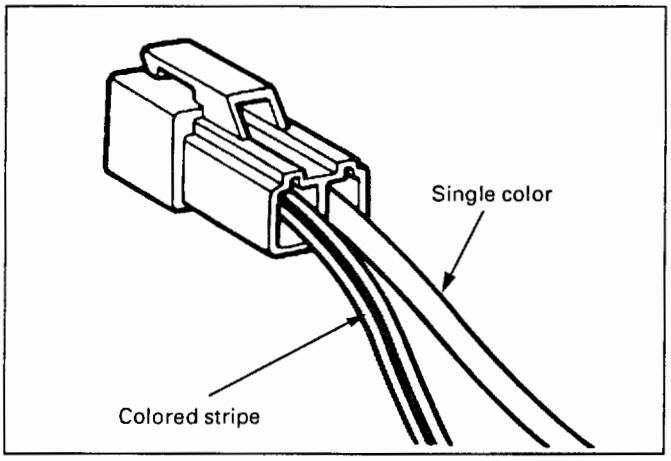

Fig. 8-24

All wires have color-coded insulation.
Wires belonging to a system's main harness will have a single color. Wires belonging to a system's sub-circuits will have a colored stripe. Striped wires use the following code to show wire size and colors.

Example: 0.5 G / R

- R — Red (Stripe color)
- G — Green (Base color)
- 0.5 — Wire size (0.5 mm^2)

Abbreviations are used to indicate wire color within a circuit diagram.
Refer to the following table.

Wire Color Coding

Color-coding	Meaning	Color-coding	Meaning
B	Black	BR	Brown
W	White	LG	Light green
R	Red	GR	Grey
G	Green	P	Pink
Y	Yellow	LB	Light blue
L	Blue	V	Violet
O	Orange		

Distinction of Circuit by Wire Base Color

Base color	Circuits	Base color	Circuits
B	Starter circuit and grounding circuit	Y	Instrument circuit
W	Charging circuit	BR, GR, L, LB, LG, O, P, V	Other circuit
R	Lighting circuit		
G	Signal circuits		

Wire Size (Fig. 8-25)

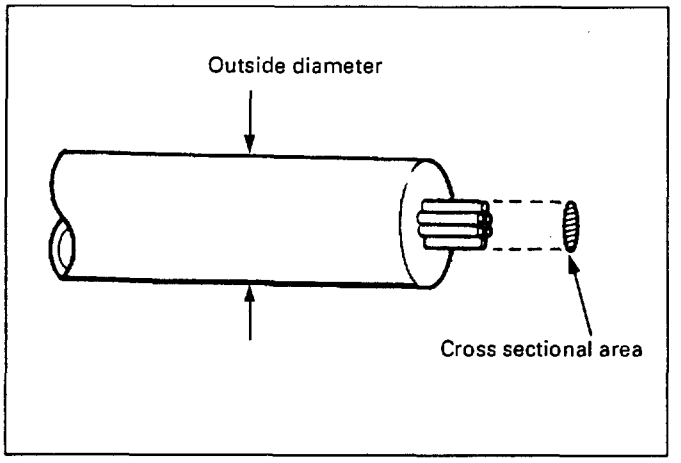

Fig. 8-25

The size of wire used in a circuit is determined by the amount of current (amperage), the length of the circuit, and the voltage drop allowed. The following wire size and load capacity, shown below, are specified by AWG (American Wire Gauge) (Nominal size means approximate cross sectional area).

Wire Size Table

Nominal size	Cross sectional area (mm^2)	Outside diameter (mm)	Allowable current (A)	AWG size (cross reference)
0.3	0.372	1.5	9	22
0.5	0.563	1.7	12	20
0.85	0.885	1.9	16	18
1.25	1.287	2.2	21	16
2	2.091	2.7	28	14
3	3.296	3.6	37.5	12
5	5.227	4.4	53	10
8	7.952	5.5	67	8
15	13.36	7.0	75	6
20	20.61	8.2	97	4

FUSES

FUSE

Fuses are the most common form of circuit protection used in vehicle wiring. A fuse is a thin piece of wire or strip of metal encased in a glass or plastic housing. It is wired in series with the circuit it protects. When there is an overload of current in a circuit, such as a short of a ground, the metal strip is designed to burn out and interrupt the flow of current. This prevents a surge of high current from reaching and damaging other components in the circuit.

Determine the cause of the overloaded before replacing the fuse.

The replacement fuse must have the same amperage specification as the original fuse.

Never replace a blown fuse with a fuse of a different amperage specification.

Doing so can result in an electrical fire or other serious circuit damage. A blown fuse is easily identified (Fig. 8-26).

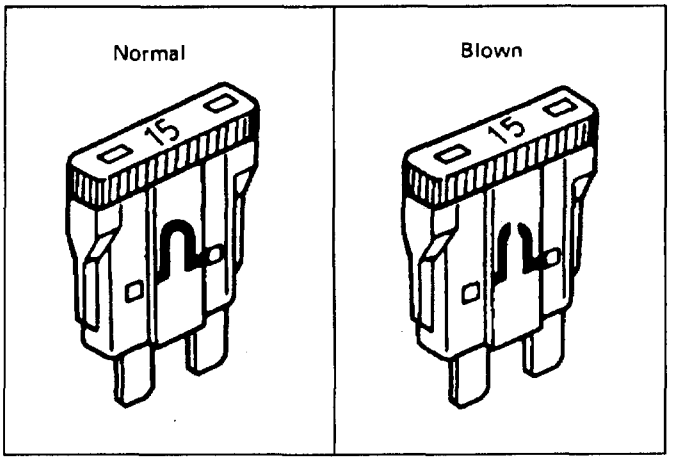

Fig. 8-26

FUSIBLE LINK

The fusible link is primarily used to protect circuits where high amounts of current flow and where is would not be practical to use a fuse. For example, the starter circuit. When a current overload occurs, the fusible link melts open and interrupts the flow of current so as to prevent the rest of the wiring harness from burning.

Determine the cause of the overload before replacing the fusible link. The replacement fusible link must have the same amperage specification as the original fusible link.

Never replace a blown fusible link with fusible link of a different amperage specification. Doing so can result in an electrical fire or other serious circuit damage.

A blown fusible link is easily identified (Fig. 8-27).

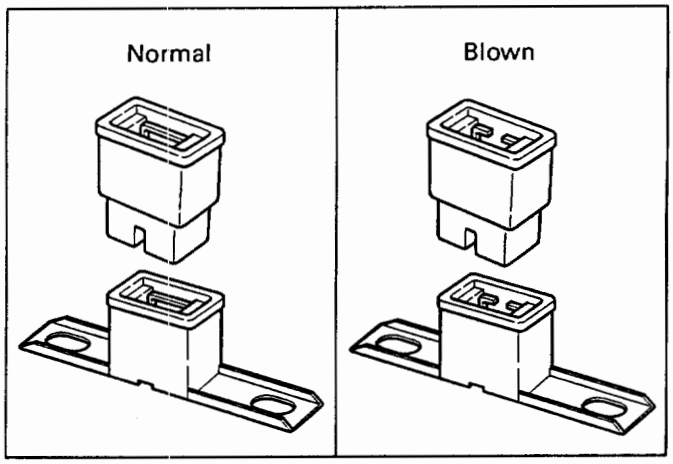

Fig. 8-27

Fusible Link Specifications

Type	Rating	Case Color	Maximum Circuit Current (A)
Connector	30A	Pink	15
Connector	40A	Green	20
Bolted	50A	Red	25
Bolted	60A	Yellow	30
Bolted	80A	Black	40

CIRCUIT BREAKER (Fig. 8-28)

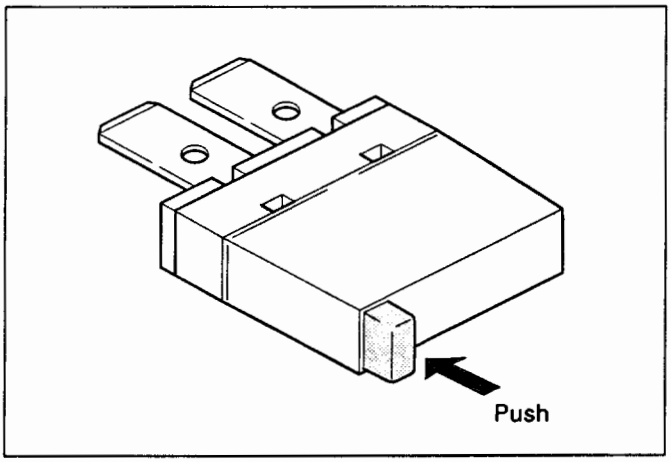

Fig. 8-28

The circuit breaker is a protective device designed to open the circuit when a current load is in excess of rated breaker capacity. If there is a short or other type of overload condition in the circuit, the excessive current will open the circuit between the circuit breaker terminals. The reset knob pops out when the circuit is open. Push the reset knob in place to restore the circuit after repairing it.

RELAY (Fig. 8-29)

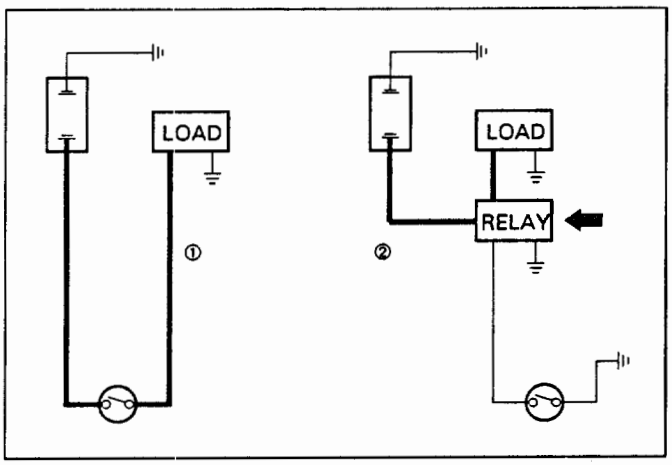

Fig. 8-29

Battery and load location may require that a switch be placed some distance from either component. This means a longer wire and a higher voltage drop ①. The installation of a relay between the battery and the load reduces the voltage drop ②.

Because the switch controls the relay, amperage through the switch can be reduced.

RELAY SPECIFICATIONS AND CONFIGURATIONS (Fig. 8-30)

Name/ Color	Rated voltage/Coil resistance	Internal circuit	Name/ Color	Rated voltage/Coil resistance	Internal circuit
1M (MR5L)/ Black	12V/ Approx. 80 Minimum operating voltage: 7V at 77°F (25°C)		2M (MR5)/ Brown	12V/ Approx. 80 Minimum operating voltage: 7V at 77°F (25°C)	
1B (MR5L)/ Grey	↑		1B-1M (MR5)/ Grey	↑	
1M (MR5)/ Black (Case), Blue (Base)	↑		1M	↑ Minimum operating voltage: 9V at 68°F (20°C)	
1T (MR5)/ Black/ Blue	↑		1M (MR5B)/ Black	12V Minimum operating voltage: 4.3V at 77°F (25°C)	
1M (Horn relay)	12V/ Minimum operating voltage: 8V at 68°F (20°C)				

* Relay contact shown in the wiring diagram indicates condition before actuation.

Fig. 8-30

DIODE

DIODE SPECIFICATIONS AND CONFIGURATIONS (Fig. 8-31)

SHAPE	MARK/ COLOR	CONSTRUCTION	CHECKING (THERE SHOULD BE CONTINUITY IN EITHER A OR B WHEN A CIRCUIT TESTER IS CONNECTED WITH DIODE TERMINAL)
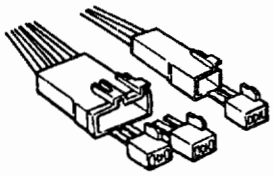	BLACK	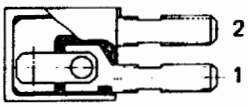	TERMINAL NO. (2, 1) CONNECTION PATTERN A: ⊕ ⊖ CONNECTION PATTERN B: ⊖ ⊕
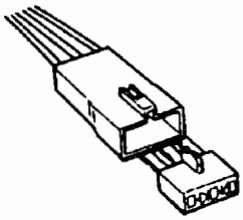	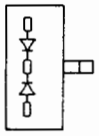 BLACK	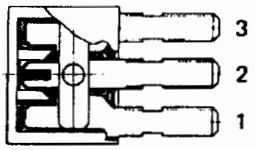	TERMINAL NO. (3, 2, 1) CONNECTION PATTERN A: ⊖ ⊕ / ⊕ ⊖ CONNECTION PATTERN B: ⊕ ⊖ / ⊖ ⊕
	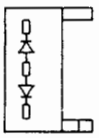 BLACK		TERMINAL NO. (3, 2, 1) CONNECTION PATTERN A: ⊖ ⊕ / ⊕ ⊖ CONNECTION PATTERN B: ⊕ ⊖ / ⊖ ⊕
	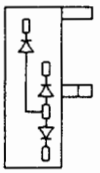 BLACK	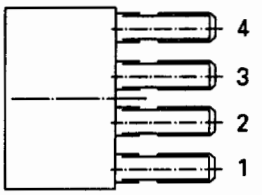	TERMINAL NO. (4, 3, 2, 1) CONNECTION PATTERN A: ⊕ ⊖ / ⊖ ⊕ / ⊖ ⊕ CONNECTION PATTERN B: ⊖ ⊕ / ⊕ ⊖ / ⊕ ⊖

Fig. 8-31

MAXIMUM RATING (Temp.=25°C)

Items	Rating	Remarks
Peak reverse voltage	400V	
Transient peak reverse voltage	500V	
Average output current	1.5A	Temp. = 40°C
Working ambient temperature	–30°C~80°C	
Storage temperature	–40°C~100°C	

CONNECTOR

- The connector pin shape determines whether the connector is male or female (Fig. 8-32).
  The connector housing configuration does not determine whether a connector is male or female.
- The symbol illustrated in the figure is used as connector, in the circuit of this section (Fig. 8-33).
- Connector is identified with a number (Fig. 8-34).
- The applicable terminal number is shown for each connector (Fig. 8-35).
- Connector terminal numbers are clearly shown.
  Male side connector terminal numbers are in sequence from upper right to lower left.
  Female side connector terminal numbers are in sequence from upper left to lower right (Fig. 8-36).

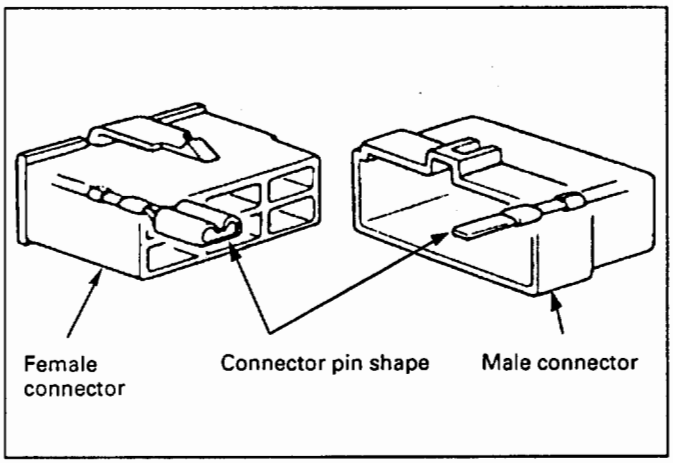

Fig. 8-32

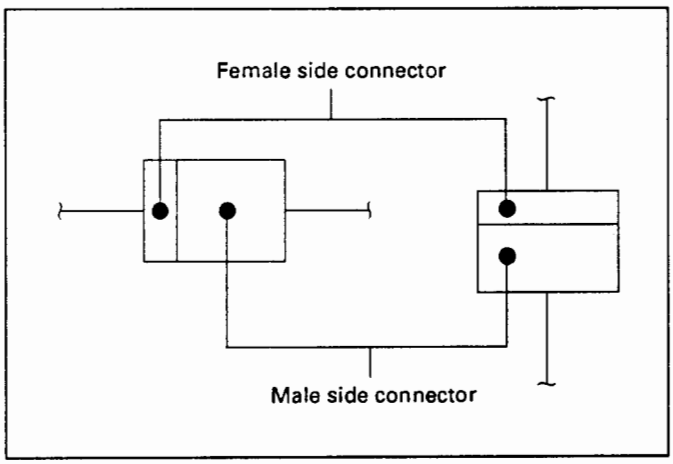

Fig. 8-33

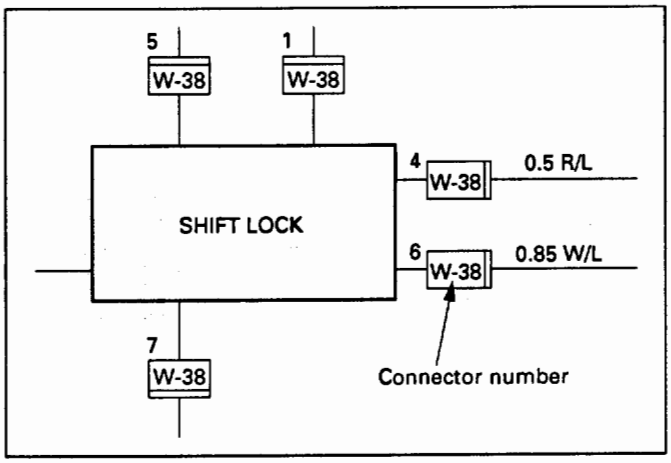

Fig. 8-34

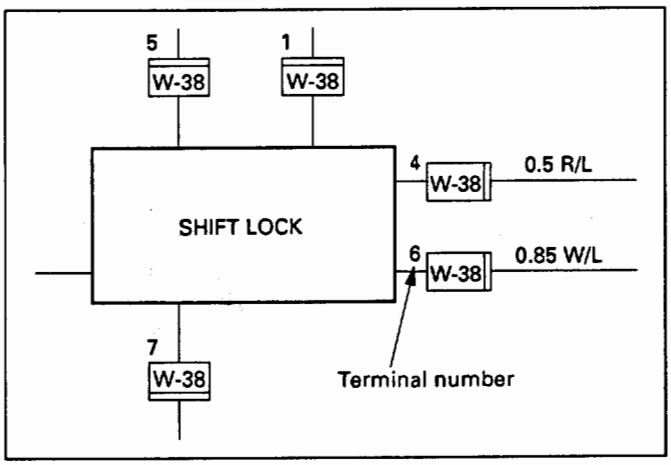

Fig. 8-35

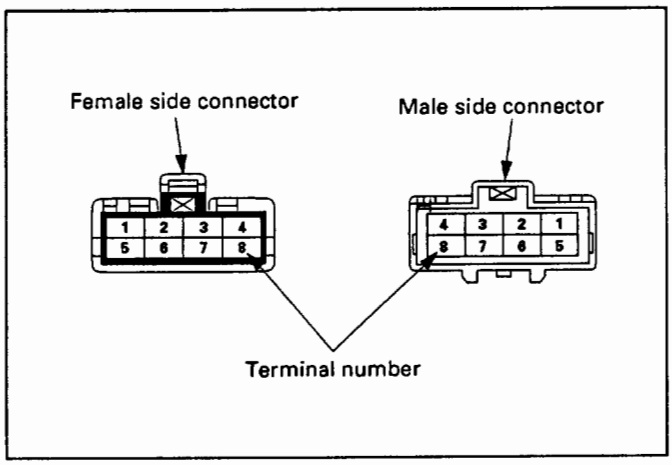

Fig. 8-36

NOTE:

1. For those connectors on which specific terminal numbers or symbols are shown (such as ECM, DERM for SRS), the terminal numbers or symbols are used in the circuit diagram, irrespective of the above rule (Fig. 8-37).
2. The connectors used for relays have their own terminal number assignment, irrespective of the above rule (Fig. 8-38).

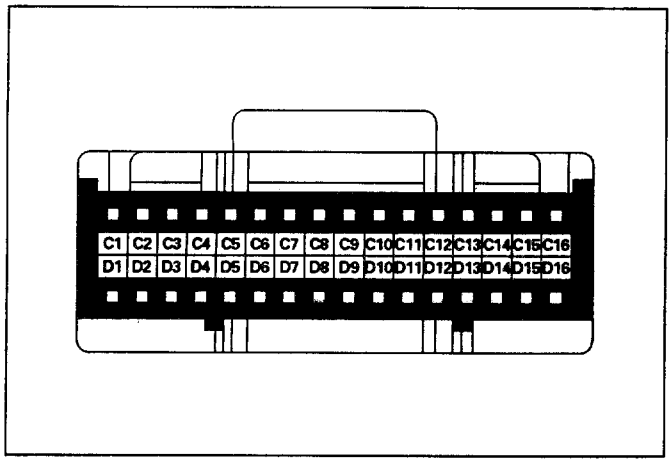

Fig. 8-37

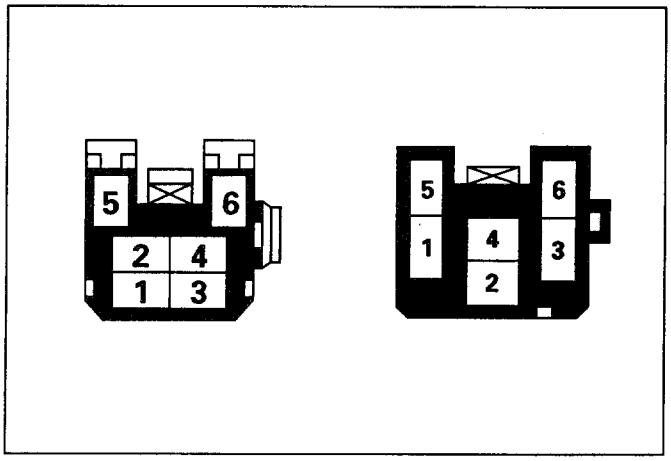

Fig. 8-38

DOUBLE LOCK TYPE CONNECTOR (Fig. 8-39)

Double-lock type yellow color connectors are used for supplemental restraint system-air bag circuit. When removing the cable harness, disconnect the connector by unlocking at two places, outside ① and inside ②. In such a case, do not pull the cables. Otherwise, cable disconnection may occur.

When connecting the connector, insert the connector completely and lock at outside. Imperfect locking may cause malfunction of SRS system circuit.

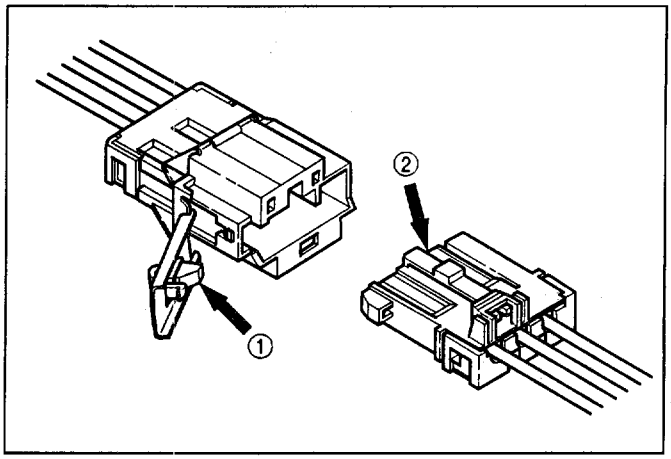

Fig. 8-39

READING THE CIRCUIT DIAGRAM

In this manual, each system has its own parts location illustration, circuit diagram and connector list used in the circuit diagram.

PARTS LOCATION: The parts location shows the location of the parts ① and the connector ② used in each harness routing ③ (Fig. 8-40).

CIRCUIT DIAGRAM: The circuit diagram shows the power supply ④ the load or loads ⑤ and the grounding point(s) ⑥ (Fig. 8-41).

CONNECTOR LIST: The connector configuration shows each connector's configuration ⑦ and the pin number ⑧ (Fig. 8-42).

PARTS LOCATION

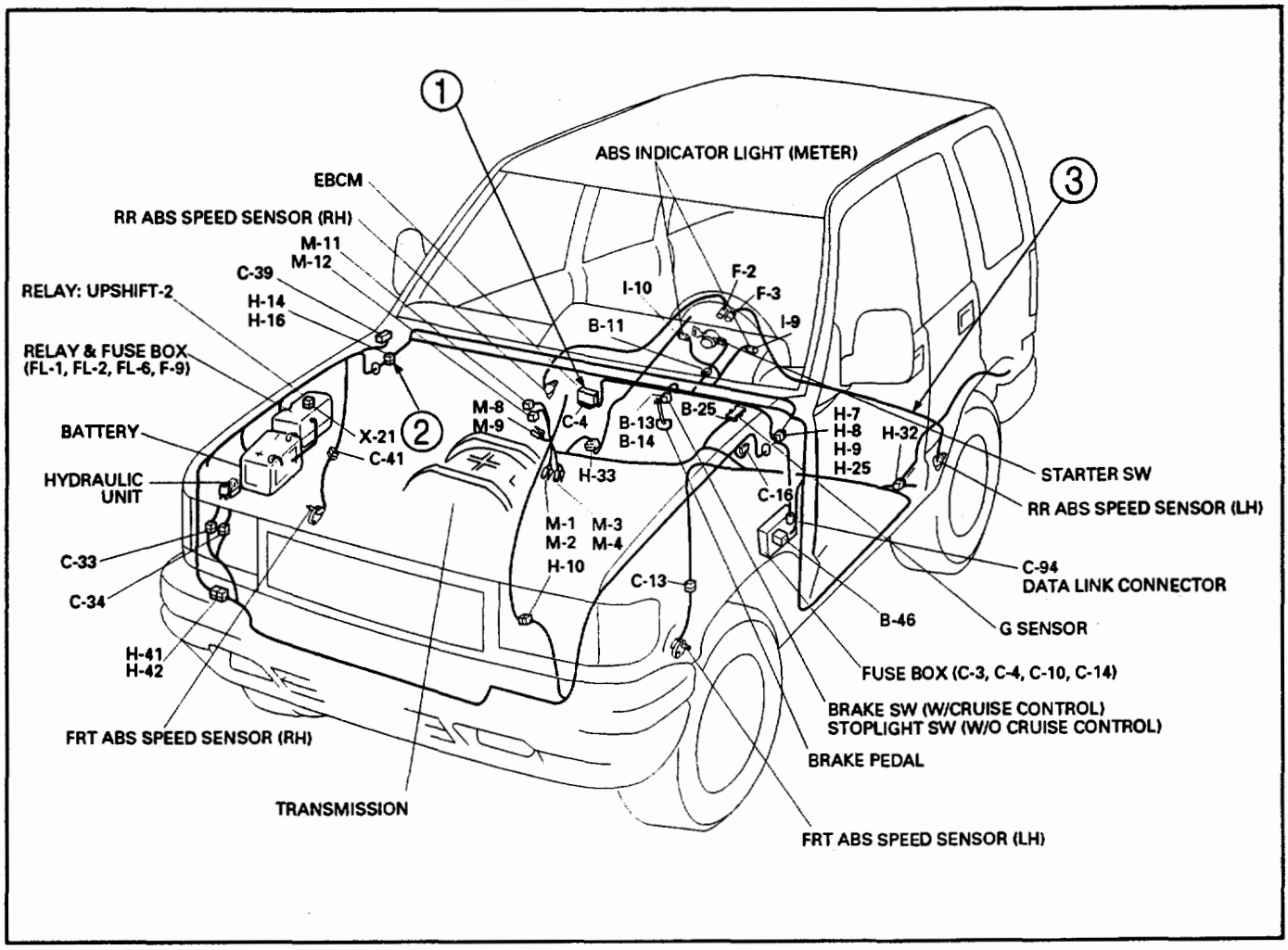

Fig. 8-40

CIRCUIT DIAGRAM

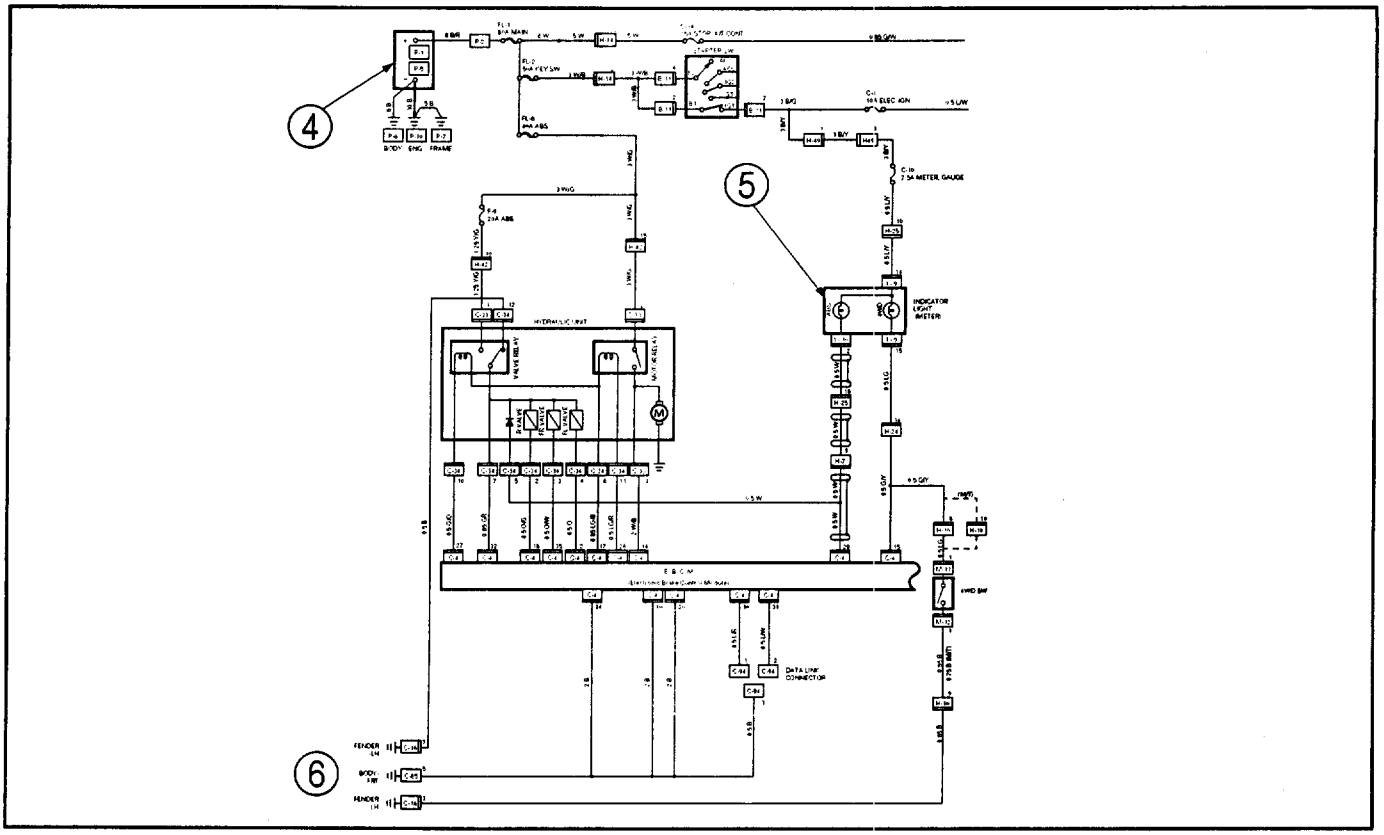

Fig. 8-41

CONNECTOR LIST

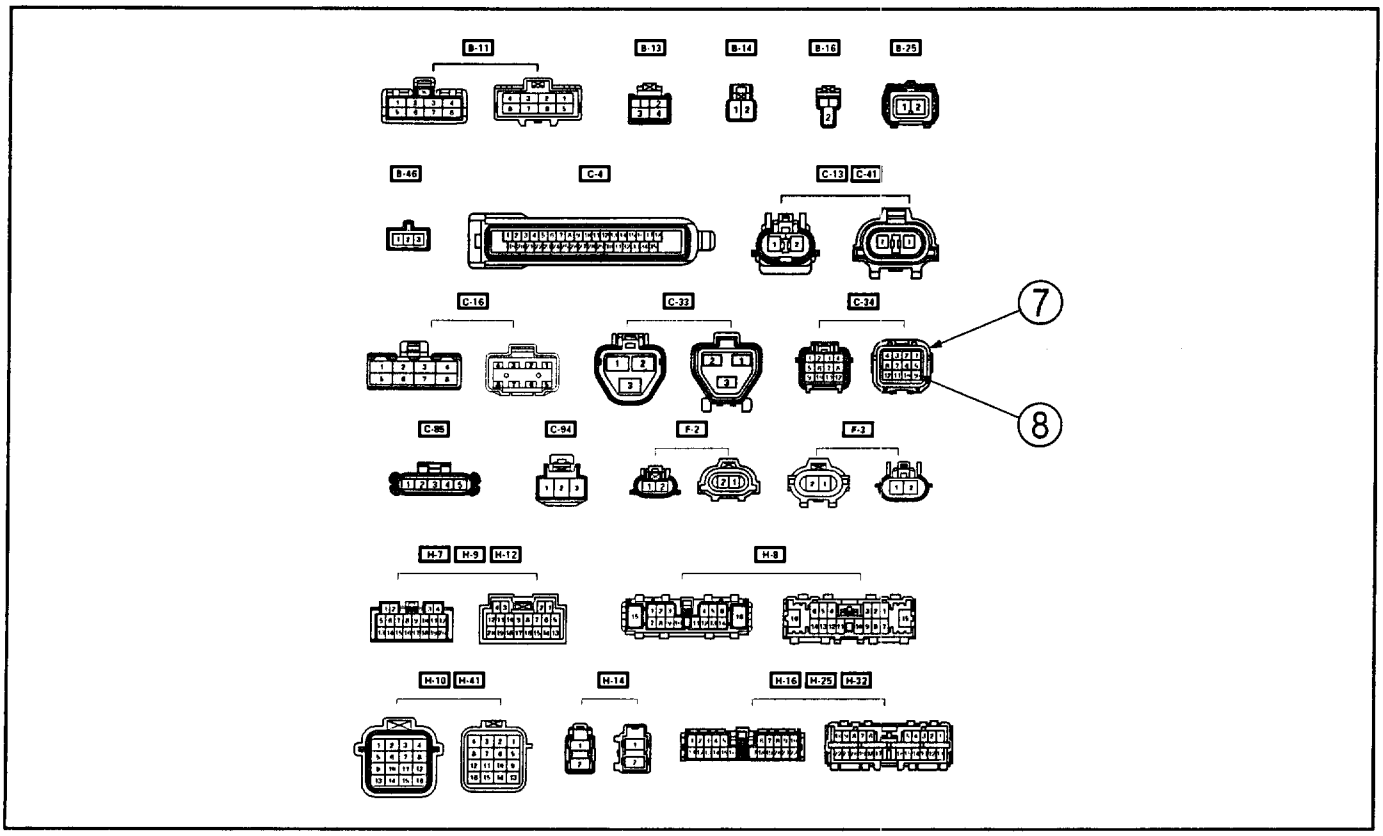

Fig. 8-42

MAIN DATA AND SPECIFICATIONS

BULB SPECIFICATIONS

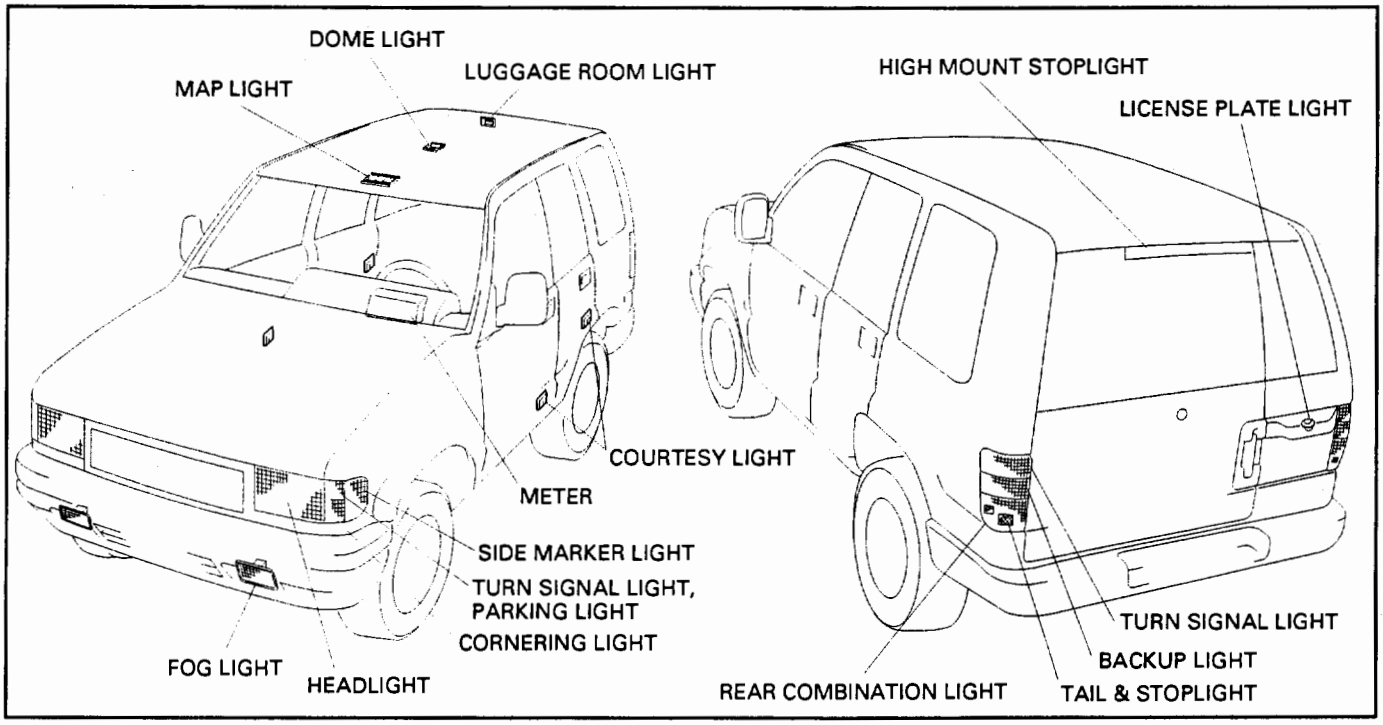

Light Name		Bulb No.	Rated Power	Number of Bulbs	Lens Color	Remarks
Headlight		9004	65w/45w	2	White	Halogen
Front combination light	Turn signal light/ Parking light	1157	27w/8w	2	White	
	Side marker light	194	3.8w	2	Amber	
	Cornering light	1156	27w	2	White	
Fog Light		–	55w	2	White	Halogen
Rear Combination light	Taillight/Stoplight	1157	8w/27w	2	Red	
	Turn signal light	1156	27w	2	Amber	
	Backup light	1156	27w	2	White	
High mount stoplight		–	–	84	Red	LED
License plate light		–	5w	1	White	
Map light		–	5w	2	White	
Dome light		–	10w	1	White	
Luggage room light		–	8w	1	White	
Courtesy light		194	3.8w	4	White	
Indicator/ Warning light	Air conditioning Sw	–	60mA	1		
	RR defogger Sw	–	60mA	1		w/o Timer
		–	80mA	1		w/Timer
	Anti-theft	–	3	1		Warning box
	Check Trans	74	1.4w	1		Warning box
	A/T OIL TEMP	–	3w	1		Warning box
	Seat heater Sw	–	60mA	2		
	Mirror defogger Sw	–	0.94w	1		
	Fog light Sw	–	60mA	1		
	Cruise	80	2w	1		Indicator box
	Cruise (Main)	80	2w	1		Indicator box

Fig. 8-43

Light Name		Bulb No.	Rated Power	Number of Bulbs	Lens Color	Remarks
Indicator/ Warning Light	Power Drive	74	1.4w	1		Meter
	Winter Drive	74	1.4w	1		Meter
	Turn Signal	74	1.4w	2		Meter
	Upshift	74	1.4w	1		Meter
	High Beam	74	1.4w	1		Meter
	ABS or RWAL	74	1.4w	1		Meter
	Seat Belt	80	2w	1		Meter
	Malfunction Indicator (Check Engine)	74	1.4w	1		Meter
	Low Fuel	74	1.4w	1		Meter
	4WD	74	1.4w	1		Meter
	Oil pressure	74	1.4w	1		Meter
	Brake System	74	1.4w	1		Meter
	Charge	74	1.4w	1		meter
	A/T Shift Position	–	0.91w	7		Meter
	AIR BAG	80	2w	1		Meter
Illumination Light	Lighting Sw	–	50mA	1		
	Fog Light Sw	–	50mA	1		
	Glove Box	–	1.2w	1		
	Ashtray	74	1.4w	1		
	Illumination Controller	–	60mA	1		
	Heater Bezel	74	150mA	2		
	Windshield Wiper /Washer Sw	–	50mA	1		
	Hazard Warning Light Sw	–	50mA	1		
	Meter	158	3.4w	4		Meter ASM
	Cigarette Lighter	74	1.4w	1		
	Select Lever	–	1.4w	1		
	Rear Wiper/ Washer Sw	–	60mA	1		
	Rear Defogger Sw	–	50mA	1		
	Door Mirror Sw	–	45mA	2		
	Headlight wiper Sw	–	50mA	1		
	Power/Winter Sw	–	50mA	2		
	Cruise Control Main sw	–	50mA	1		

FUSE, FUSIBLE LINK AND CIRCUIT BREAKER LOCATION

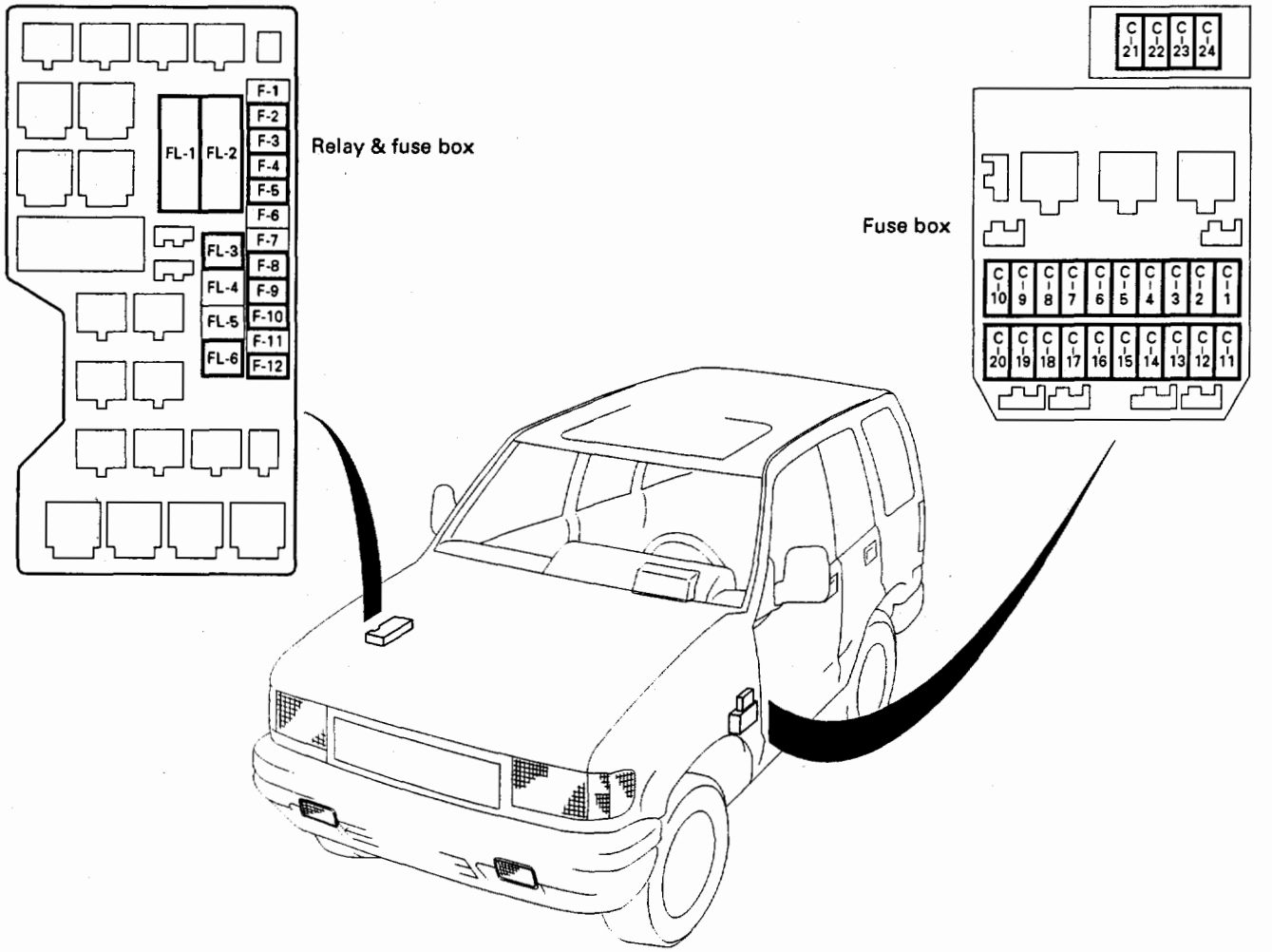

Relay & Fuse box

Fuse		
No.	Capacity	Indication on label
F-1	–	–
F-2	10A	O_2 SENSOR HEATER
F-3	15A	HORN HAZARD
F-4	15A	H/LAMP-LH
F-5	15A	H/LAMP-RH
F-6	–	–
F-7	–	–
F-8	15A	(FRT.FOG)
F-9	20A	ABS
F-10	15A	FUEL PUMP
F-11	–	–
F-12	15A	TAIL
FUSIBLE LINK		
FL-1	80A	MAIN
FL-2	50A	KEY SW
FL-3	30A	ECM
FL-6	40A	(ABS 4/WHEEL ONLY)

Fuse box

Fuse		
No.	Capacity	Indication on label
C-1	10A	STARTER RELAY
C-2	15A	(SEAT HEATER)
C-3	15A	TURN BACK
C-4	10A	ELEC. IGN.
C-5	15A	FRT WIPER & WASHER
C-6	10A	RR WIPER & WASHER
C-7	10A	(H/LAMP WIPER)
C-8	15A	ENGINE
C-9	15A	IGN. COIL
C-10	10A	METER GAUGE
C-11	10A	(AUDIO [ACC]) MIRROR
C-12	20A	CIGARETTE
C-13	10A	(ANTI THEFT)

Fuse		
No.	Capacity	Indication on label
C-14	15A	STOP A/T CONT
C-15	20A	(AUDIO [B])
C-16	10A	CLOCK [B] ROOM
C-17	25A	RR DEFOG
C-18	20A	(DOOR LOCK)
C-19	25A	BLOWER
C-20	10A	(AIR CON)
C-21	10A	SRS-1
C-22	10A	SRS-2
C-23	10A	SRS-3
C-24	10A	SRS-4
CIRCUIT BREAKER		
C/B-1	–	–
C/B-2	30A	(P/W, P/S, S/R)

O_2: Oxygen

Fig. 8-44

FUSE BLOCK CIRCUIT

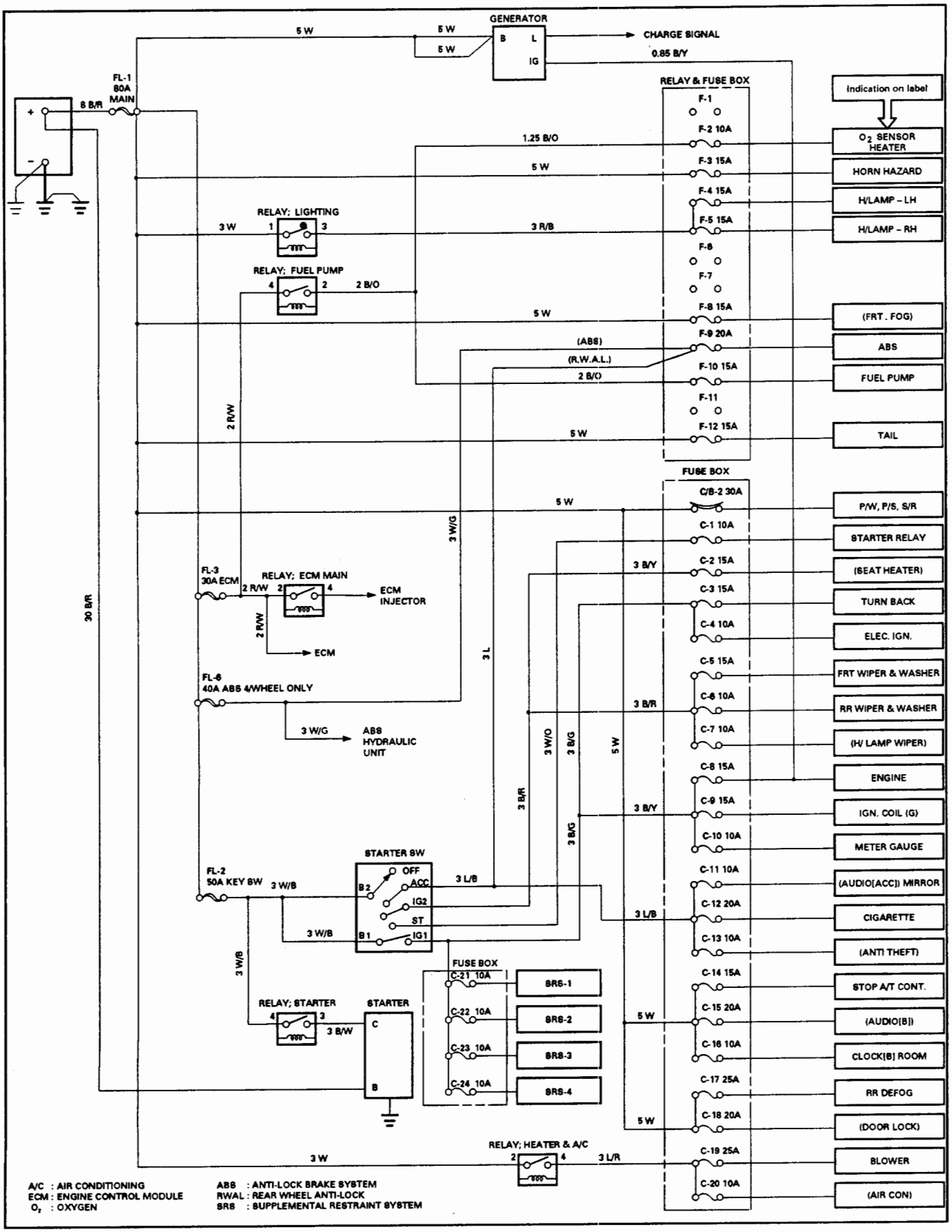

A/C : AIR CONDITIONING
ECM : ENGINE CONTROL MODULE
O_2 : OXYGEN
ABS : ANTI-LOCK BRAKE SYSTEM
RWAL : REAR WHEEL ANTI-LOCK
SRS : SUPPLEMENTAL RESTRAINT SYSTEM

Fig. 8-45

REFERENCE TABLE OF FUSE, FUSIBLE LINK AND CIRCUIT BREAKER

FUSE

(Relay and fuse box)

Fuse No.	Capacity	Indication on label	Parts (Load)
F-1	–	–	–
F-2	10A	O_2 SENSOR HEATER	Oxygen sensor
F-3	15A	HORN HAZARD	Horn, Horn relay, Horn SW, Hazard warning SW, Flasher unit, Anti-theft horn, Anti-theft controller
F-4	15A	H/LAMP–LH	Headlight (LH), High beam indicator light, Dimmer·passing SW, Cornering light SW, Fog light SW, Fog light relay, Cornering light, Cornering light relay
F-5	15A	H/LAMP–RH	Headlight (RH), Dimmer·passing SW
F-6	–	–	–
F-7	–	–	–
F-8	15A	(FRT FOG)	Fog light, Fog light relay
F-9	20A	ABS	Hydraulic unit, Rear wheel anti-lock brake controller, Electronic brake control module
F-10	15A	FUEL PUMP	Fuel pump
F-11	–	–	–
F-12	15A	TAIL	Tail relay, Lighting SW, FRT side maker light, Parking light, Taillight, Trailer harness connector, Illumination controller, Illumination light, Glove box SW, License plate light, A/T shift indicator control unit

(Fuse Box)

Fuse No.	Capacity	Indication on label	Parts (Load)
C-1	10A	STARTER RELAY	Starter relay, Clutch start SW (M/T), Mode SW (A/T), Anti-theft controller, DERM (SRS)
C-2	15A	(SEAT HEATER)	Seat heater SW (LH & RH), Seat heater (LH & RH)
C-3	15A	TURN BACK	Transmission control module, Turn signal SW, Front turn signal light, Rear turn signal light, Turn signal indicator light, Flasher unit, Cornering light relay, Backup light, Backup light SW (M/T), Mode SW (A/T), A/T shift indicator control unit, Lighting SW, A/T shift lock control unit, A/T shift indicator, Cruise control unit, Cancel SW

(Fuse Box)

Fuse No.	Capacity	Indication on label	Parts (Load)
C-4	10A	ELEC. IGN.	Cruise control unit, Rear defogger SW, Rear defogger relay, Rear defogger SW indicator light, Clutch SW (M/T), Transmission SW-1, 2 (M/T), Transmission SW-3, 4 (M/T), Cancel SW (Combination SW), Cruise control main SW, Cruise control main relay, Cruise control indicator light, Cruise control SW, Door mirror, Door mirror defogger SW, A/T shift lock control unit, Power window relay, Electronic brake control module, Transmission control module, G sensor, Upshift-2 relay, Upshift indicator (Meter)
C-5	15A	FRT WIPER & WASHER	Windshield wiper and washer SW, Windshield wiper motor, Windshield washer motor, Windshield wiper intermittent relay
C-6	10A	RR WIPER & WASHER	Rear wiper & washer SW, Rear washer motor, Rear wiper motor, Rear wiper intermittent relay
C-7	10A	(H/LAMP WIPER)	Headlight wiper SW, Headlight wiper motor, Headlight washer motor, Headlight wiper timer
C-8	15A	ENGINE	Generator, ECM main relay, V.S.V; EGR, V.S.V: canister, V.S.V: intake air (DOHC)
C-9	15A	IGN. COIL	Ignition control module, Engine control module
C-10	10A	METER GAUGE	Vehicle speed sensor, Remind Buzzer, Meter and gauge (Voltmeter, Engine coolant temperature gauge, Tachometer, Speedometer, Oil pressure gauge, Fuel gauge), Indicator and warning light (Anti-lock brake system, Rear wheel anti-lock, Seat belt, check engine, Low fuel, 4WD, Oil pressure, Upshift, Brake system, Charge, A/T oil temp, Cruise control indicator light, Check trans indicator light, Power drive indicator light, Winter drive indicator light), 4WD SW, Parking brake SW, Seat belt SW, Brake differential SW Electronic brake control module, Engine control module, Rear wheel anti-lock brake controller
C-11	10A	(AUDIO[ACC]) MIRROR	Audio, Door mirror, Door mirror control SW, Door mirror folding SW, Digital clock, Speaker
C-12	20A	CIGARETTE	Cigarette lighter
C-13	10A	ANTI THEFT	Anti-theft controller
C-14	15A	STOP A/T CONT	Stoplight SW (w/o cruise control), Brake SW (w/cruise control), Rear wheel anti-lock brake controller, Stoplight, Transmission control module, Electronic brake control module, Trailer harness connector, Cruise control unit, A/T shift lock control unit, Lockup off relay
C-15	20A	(AUDIO[B])	Horn, Horn relay, Horn SW, Hazard warning light SW, Flasher unit, Anti-theft horn, Hazard warning light, Audio

(Fuse Box)

Fuse No.	Capacity	Indication on label	Parts (Load)
C-16	10A	CLOCK[B] ROOM	Digital clock, Audio, Dome light, Map light, Luggage room light, Courtesy light, Door SW (Front, rear, tail gate), Antenna, Anti-theft controller, Key remind SW, Seat belt, Key & light remind buzzer
C-17	25A	RR DEFOG	Rear defogger, Rear defogger relay
C-18	20A	(DOOR LOCK)	Anti-theft indicator light, Front door lock & power window SW, Door lock key SW, Door lock actuator (Front & rear)
C-19	25A	BLOWER	Blower motor, Blower resistor Fan SW
C-20	10A	(AIR CON)	Pressure SW, A/C thermostat relay, A/C compressor relay, Magnetic clutch (A/C compressor), A/C SW, Electro thermostat, Fan SW
C-21	10A	SRS-1	SRS warning light (Meter)
C-22	10A	SRS-2	DERM
C-23	10A	SRS-3	Passenger inflator module, DERM
C-24	10A	SRS-4	Dual pole arming sensor, DERM, SRS coil assembly, Driver inflator module

ECM: Engine control module, VSV: Vacuum switching valve.

CIRCUIT BREAKER
(Fuse box)

Circuit breaker No.	Capacity	Indication on label	Parts (Load)
C/B-1	–	–	–
C/B-2	30A	(P/W, P/S, S/R)	Power window relay, Power window SW, Power window motor, Sun roof motor, Sun roof control unit, Sun roof SW, Safety stop SW, Limit SW, Power seat switch, Front tilt motor & SW, Rear tilt motor & SW, Slide motor, Recliner motor & SW

FUSIBLE LINK
(Relay and fuse box)

Fusible link No.	Capacity	Indication on label
FL-1	80A	MAIN
FL-2	50A	KEY SW
FL-3	30A	ECM
FL-4	–	–
FL-5	–	–
FL-6	40A	(ABS 4-WHEEL ONLY)

ECM: Engine Control Module
ABS: Anti-lock Brake System

RELAY LOCATION

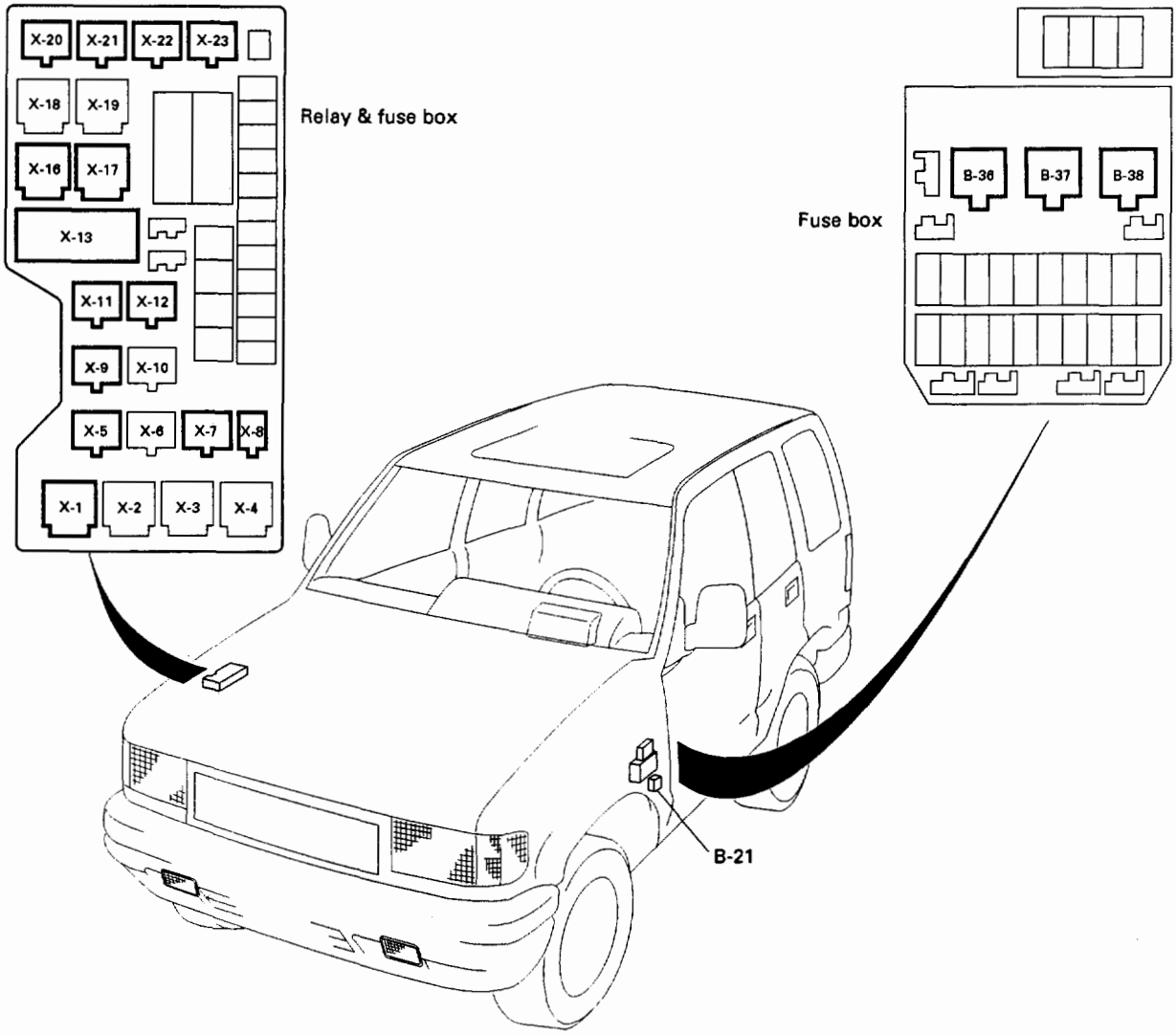

Relay List

Connector No.	X-1	X-5	X-7	X-8	X-9	X-11	X-12	X-13
Usage / Transmission	Lighting	A/C Thermostat	A/C Compressor	Horn	Tail	Fuel pump	ECM main	Windshield wiper int.
A/T	○	○	○	○	○	○	○	○
M/T	○	○	○	○	○	○	○	○

Connector No.	X-16	X-17	X-20	X-21	X-22	X-23	B-21	B-36	B-37	B-38
Usage / Transmission	Upshift -1	Starter	Cruise control main	Upshift -2	Cornering light	Fog light	Rear wiper int.	Heater & A/C	Power window	Rear defogger
A/T	–	○	○	–	○	○	○	○	○	○
M/T	○	○	○	○ (w/ABS)	○	○	○	○	○	○

A/C: Air Conditioning, ECM: Engine Control Module

Fig. 8-46

DIODE LOCATION

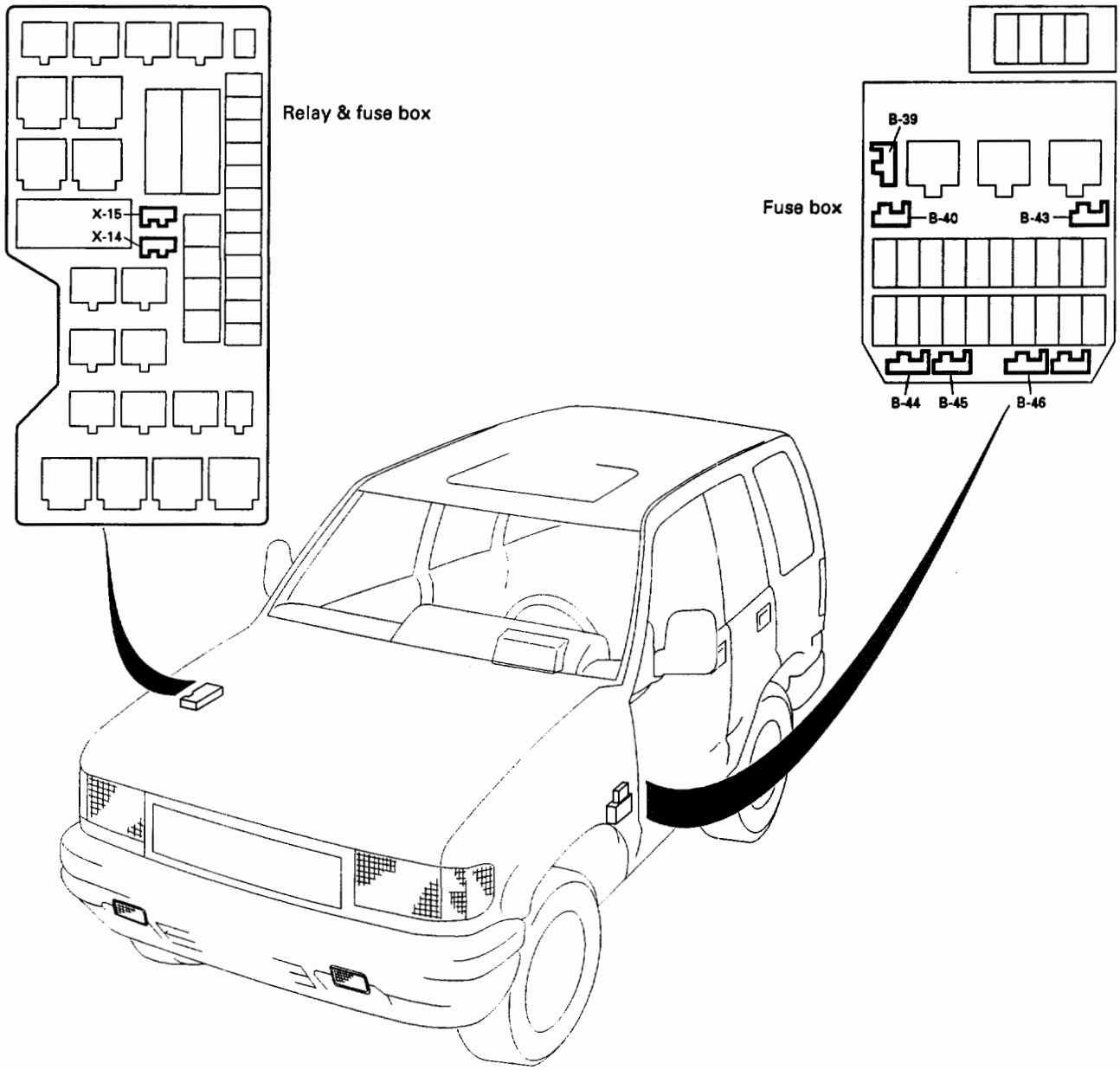

Diode List

Connector No.	X-14	X-15	B-39	B-40	B-43	B-44	B-45	B-46
Usage / Engine model	Cornering light	ECM	Dome Light Anti-theft	Anti-theft	Anti-theft Light remind	Mode switch	Cruise control RWAL	EBCM
DOHC	○	○	○	○	○	○	○	○
SOHC	○	○	○	–	○	–	○	–

ECM: Engine Control Module, TCM: Transmission Control Module
A/C: Air Conditioning, RWAL: Rear Wheel Anti-Lock, EBCM; Electronic Brake Control Module

Fig. 8-47

GROUNDING POINT REFERENCE TABLE

Connector No.	Cable harness	Location	Parts (Load)
B-1	Body harness	Body-RH	Remind buzzer, Key remind switch (Starter switch), Sun roof control unit, Sun roof motor, Sun roof switch, Safety stop switch, Limit switch
B-2			Door lock key switch (Front-RH), Cruise control unit, Cigar lighter, Door mirror (RH), Front door key switch (RH), Front door lock actuator (RH), Fan switch, Starter relay, Front door lock & power window switch (LH, RH), Front power window motor
B-18		Body-LH	Door lock key switch (Front-LH), Front power window motor (LH), Door mirror (LH), Front door key switch (LH), Front door lock actuator (LH), Rear wiper intermittent relay, Front door lock & power window switch (LH)
B-19			Starter relay, Headlight wiper switch, Anti-theft controller, Dimmer·passing switch, Fog light switch, Headlight, Lighting relay, Fog light relay, Illumination controller, Illumination light, Rear defogger switch, Rear defogger relay, Flasher unit, Power window relay, Cruise control main relay, Kick-down switch, Audio, Intermittent relay (front), Mode SW, Tail relay, Lighting SW, Cornering light relay, Glove box switch, Digital clock, Transmission control module, Heater & A/C relay, Front door key switch, Door mirror control switch, Door mirror folding switch, Door mirror defogger switch, Meter assembly
B-26		Body-center	Seat heater, Seat heater switch, Fuel pump, Fuel pump relay, Seat belt switch, Remind buzzer, Power and winter switch, Shift lock controller, Rear door lock actuator, Fuel tank unit, Power seat SW, Front tilt motor & switch, Rear tilt motor & switch, Slide motor, Recliner motor & switch, Rear power window switch (LH, RH), Rear power window motor (LH, RH), Seat belt warning light
1 C-16	Engine room harness	Fender-LH	Headlight wiper motor
2 C-16			Power steering pressure SW
3 C-16			4WD switch, 4WD indicator (meter), Brake fluid SW, Oxygen sensor (M/T)
4 C-16			Electronic brake control module
5 C-16			Front side marker light (LH, RH), Cornering light, Cornering light switch (Combination switch), Front turn signal light, Turn signal light switch (Combination switch), Parking light (LH, RH)
6 C-16			Fog light, Fog light relay
7 C-16			Hydraulic unit
8 C-16			Oxygen sensor (A/T), ABS & Upshift relay, Transmission SW

Connector No.	Cable harness	Location	Parts (Load)
1 C-39	Engine room harness	Fender-RH	Windshield washer motor
2 C-39			Upshift-1 relay, Intermittent relay (Front)
3 C-39			Windshield wiper motor
4 C-39			Vehicle speed sensor, Hazard warning switch, Turn signal indicator (Meter), Meter assembly
6 C-39			Headlight wiper timer, Headlight washer motor
7 C-39			Engine Control Module (ECM) main relay, Fuel pump relay, Cruise control main relay, Cruise control main switch, Air Conditioning relay, Lockup off relay, Upshift-2 relay, Transmission-1, 2 switch
8 C-39			Vacuum pump and vacuum switching valve
C-45		Body-FRT	Rear wheel anti-lock controller
5 C-85			Electronic brake control module, Data link connector
C-96		Front end	Rear wheel anti-lock valve
E-28	Engine ECGI harness	Common chamber	Knock sensor module (DOHC), ECM, Oxygen sensor (SOHC)
E-29			Knock sensor (DOHC), ECM, Oxygen sensor (DOHC)
E-30		Duct (DOHC) Common chamber (SOHC)	Ignition control module
E-31			ECM, A/T Shift indicator control unit, Data link connector, Knock sensor (DOHC)
F-6	Chassis harness	Frame	Rear wheel anti-lock valve
I-39	Instrument harness	Body-FRT	Audio
M-16	Transmission harness	Engine	Transmission control module
R-3	Rear body harness	Body-RR	Rear defogger relay, Rear defogger, Tailgate key switch, Tailgate lock actuator, Rear washer motor, Rear wiper and washer switch, Rear wiper motor, Stoplight switch, Brake switch, High mount stoplight
R-4			Taillight, Stoplight, Stoplight switch, Brake switch, Rear turn signal light, Backup light, Backup light switch, Mode switch, License plate light, Luggage room light, Trailer harness connector (Stoplight, taillight), License plate light
U-2			DERM
U-3	SRS harness	Body-FRT	DERM, Forward sensor, Inflator module (Driver & passenger), SRS coil assembly

LOCATION – 1

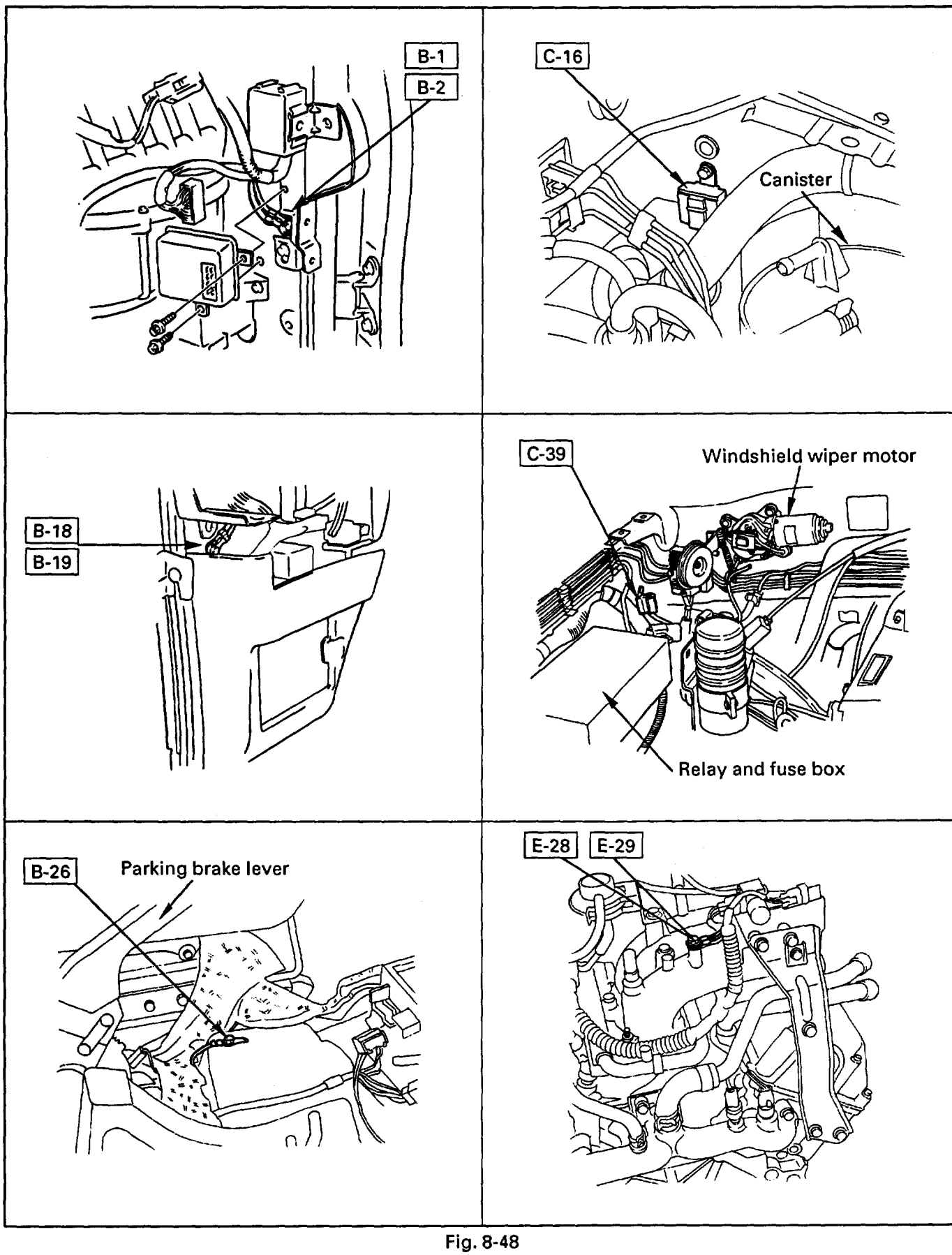

Fig. 8-48

LOCATION - 2

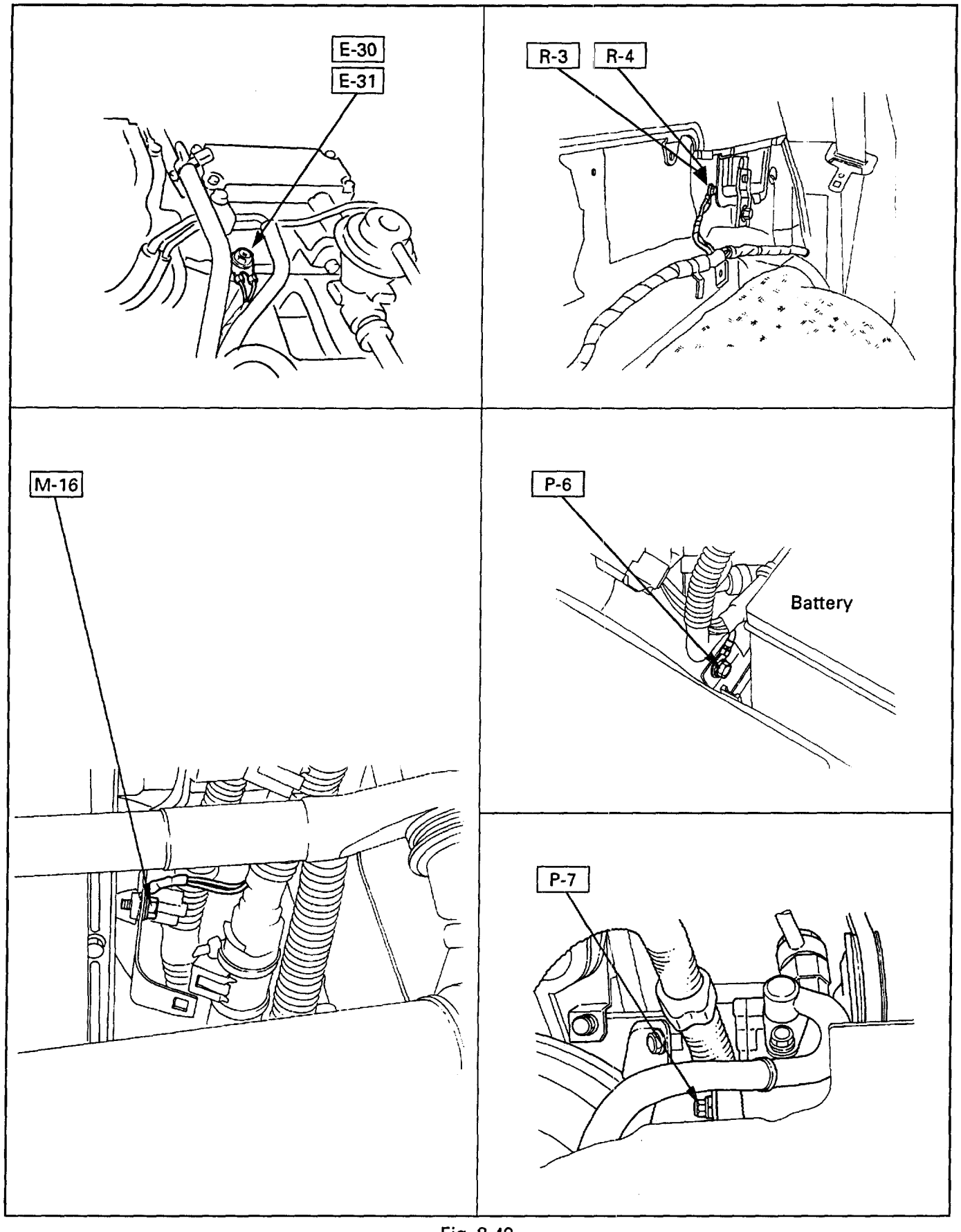

Fig. 8-49

LOCATION - 3

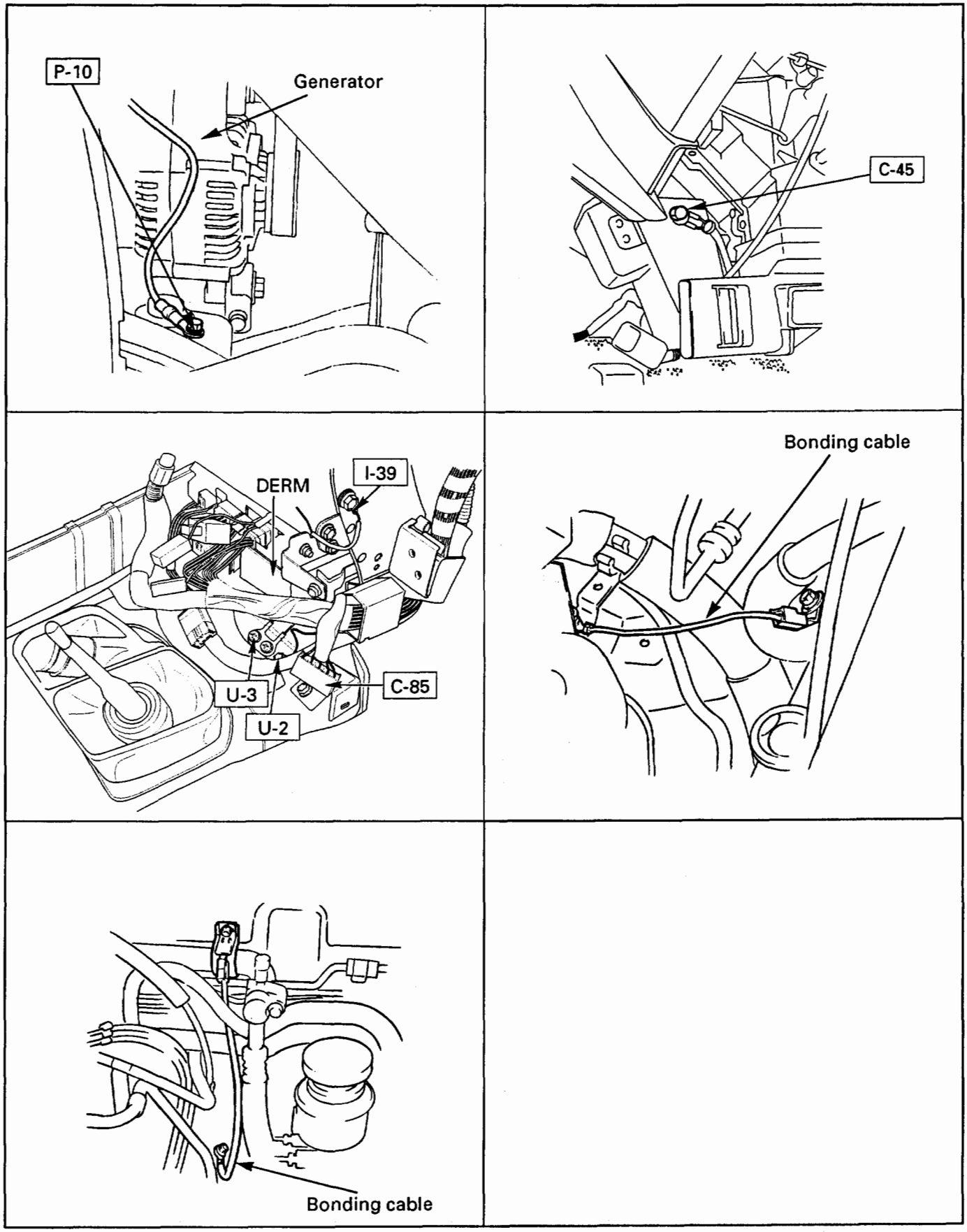

Fig. 8-50

CABLE HARNESS ROUTING

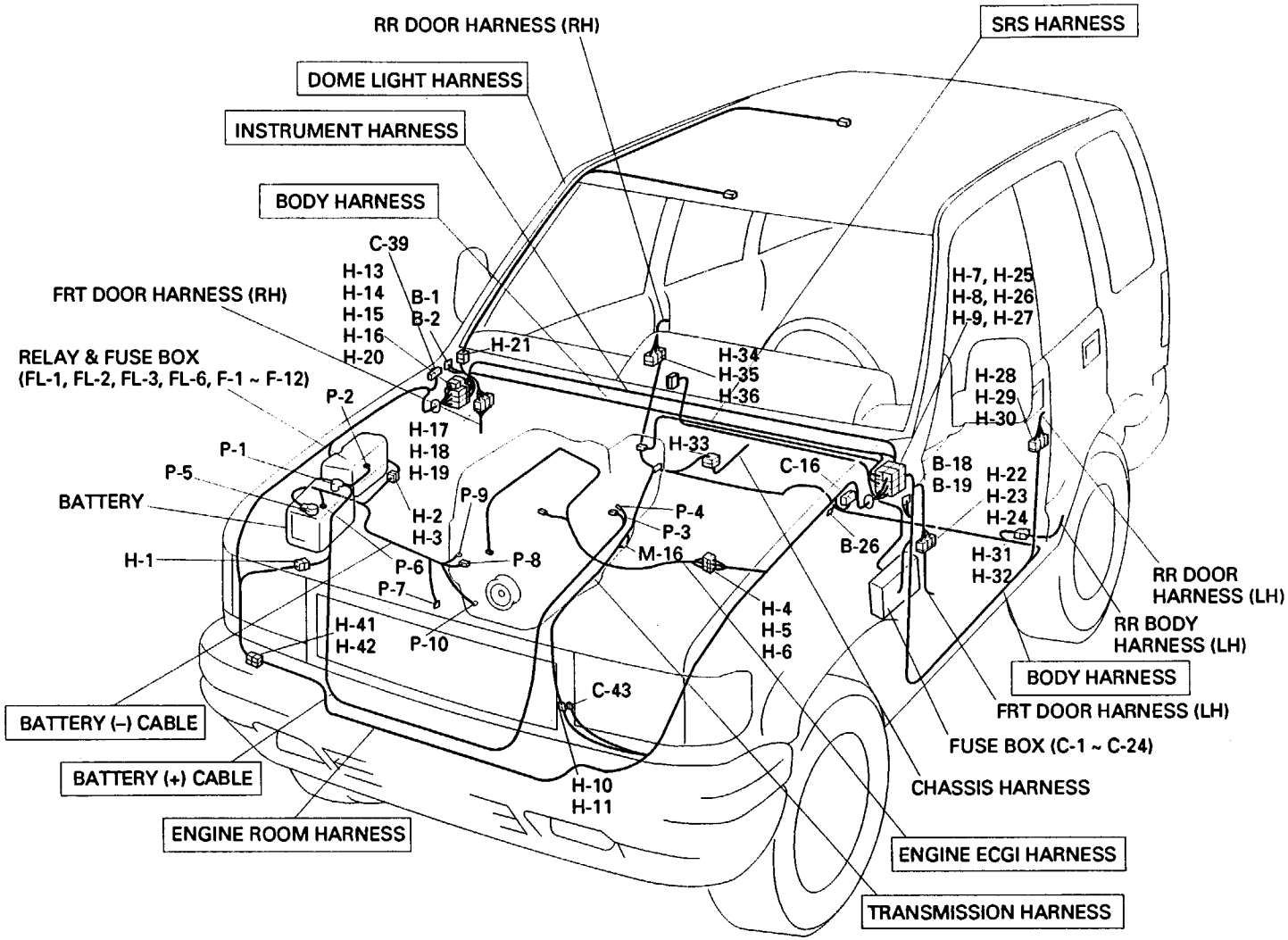

Fig. 8-51

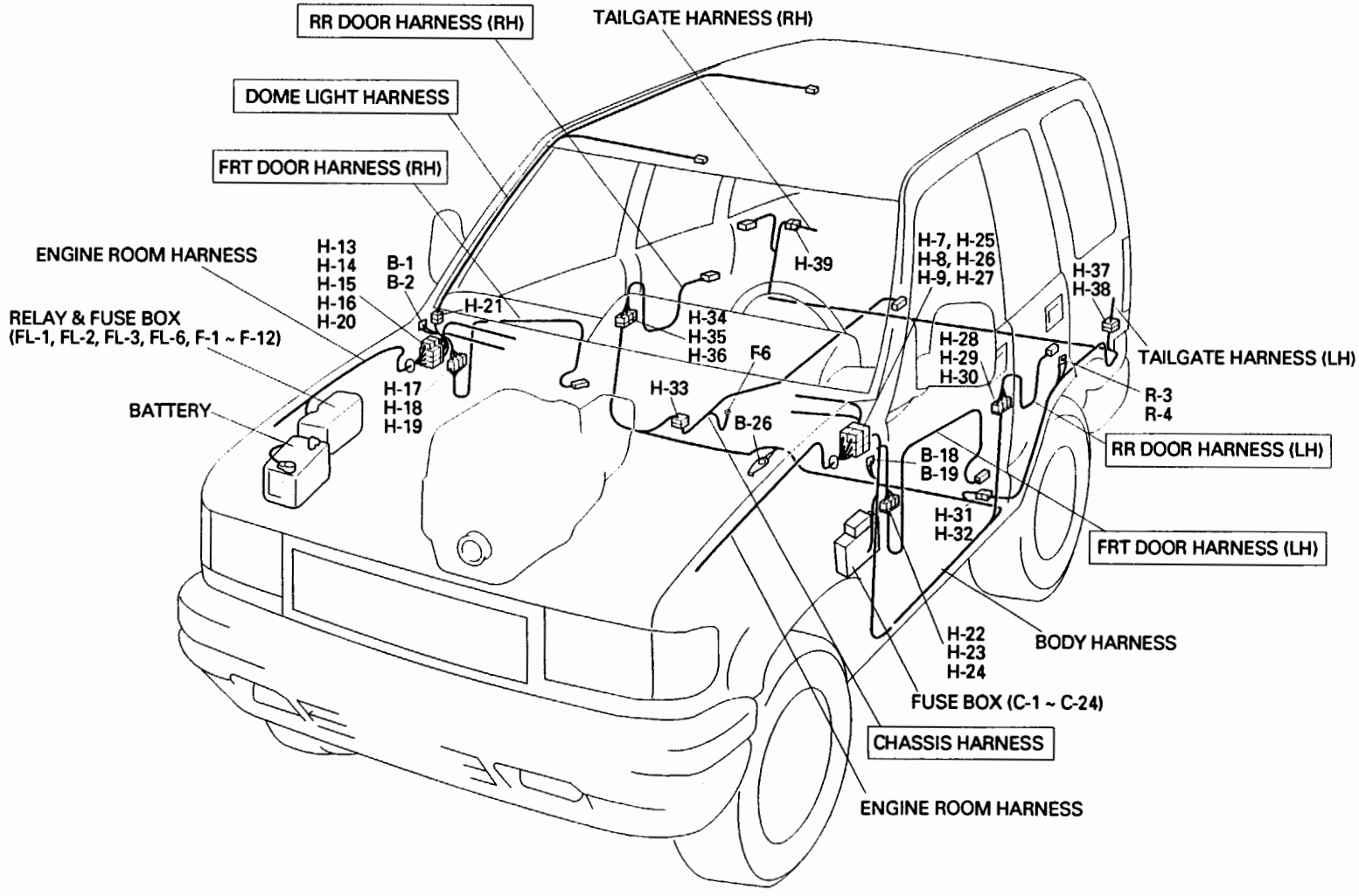
RR DOOR HARNESS (RH)
TAILGATE HARNESS (RH)
DOME LIGHT HARNESS
FRT DOOR HARNESS (RH)
ENGINE ROOM HARNESS
H-13
H-14
H-15
H-16
H-20
B-1
B-2
H-21
RELAY & FUSE BOX
(FL-1, FL-2, FL-3, FL-6, F-1 ~ F-12)
BATTERY
H-17
H-18
H-19
H-34
H-35
H-36
F6
H-33
B-26
H-39
H-7, H-25
H-8, H-26
H-9, H-27
H-28
H-29
H-30
H-37
H-38
TAILGATE HARNESS (LH)
R-3
R-4
RR DOOR HARNESS (LH)
B-18
B-19
H-31
H-32
FRT DOOR HARNESS (LH)
H-22
H-23
H-24
BODY HARNESS
FUSE BOX (C-1 ~ C-24)
CHASSIS HARNESS
ENGINE ROOM HARNESS

Fig. 8-52

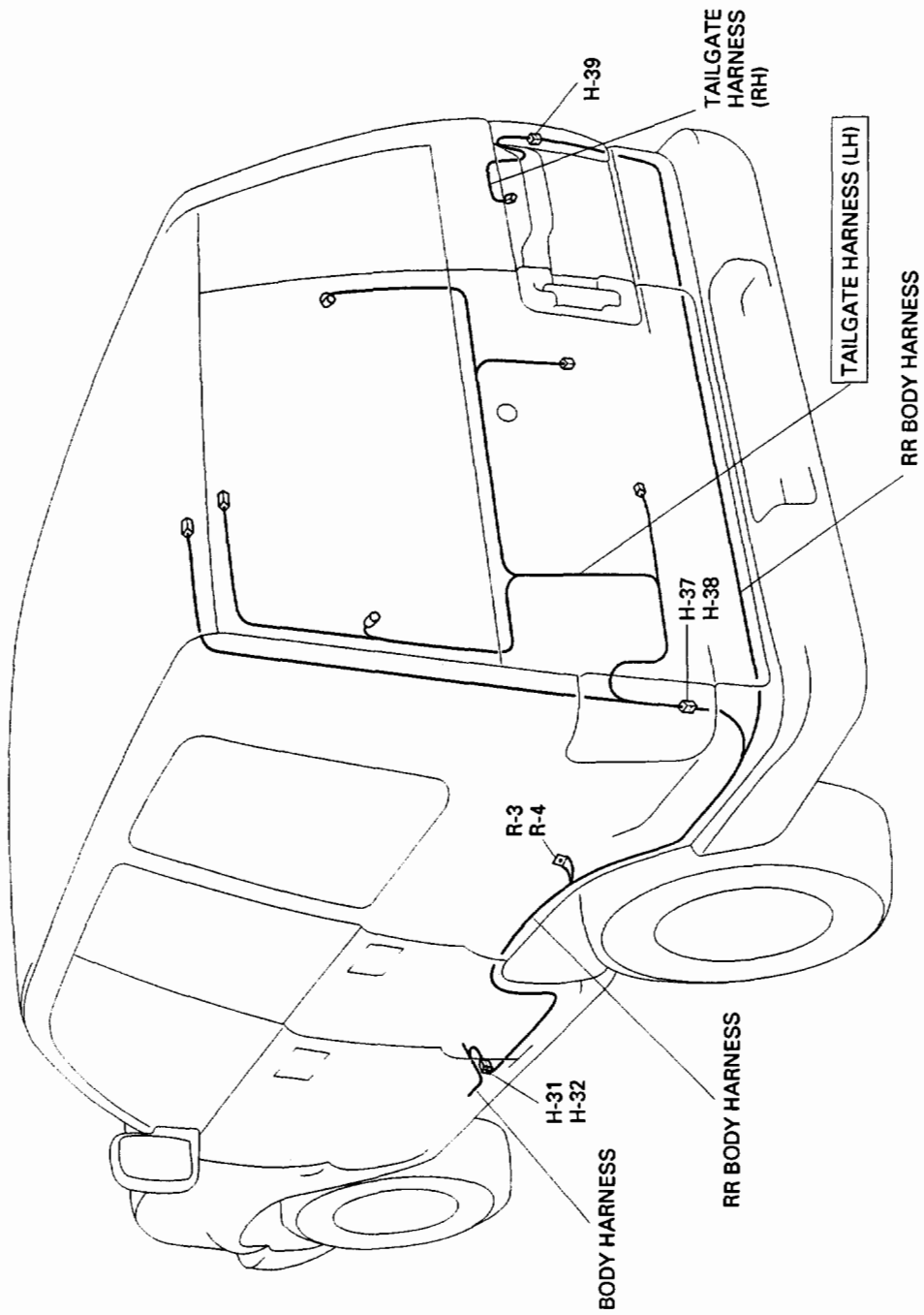
H-39
TAILGATE HARNESS (RH)
TAILGATE HARNESS (LH)
RR BODY HARNESS
H-37
H-38
R-3
R-4
H-31
H-32
BODY HARNESS
RR BODY HARNESS

Fig. 8-53

MEMO

SYSTEM REPAIR

START AND CHARGING

GENERAL DESCRIPTION

The system consists of the starter switch, starter, generator, starter relay, clutch start SW (M/T), mode SW (A/T), heater & A/C relay.

When the starter SW is set to the "ST" position with the A/T select lever at "P" (Parking) or "N" (Neutral) position (Mode SW "ON"), or the clutch pedal depressed (Clutch start SW "ON"), the battery positive voltage is applied to the starter solenoid coil through the starter relay to start the starter. At the same time, the starter relay cuts off the blower motor and the A/C circuit.

OPERATION OF THE CIRCUIT

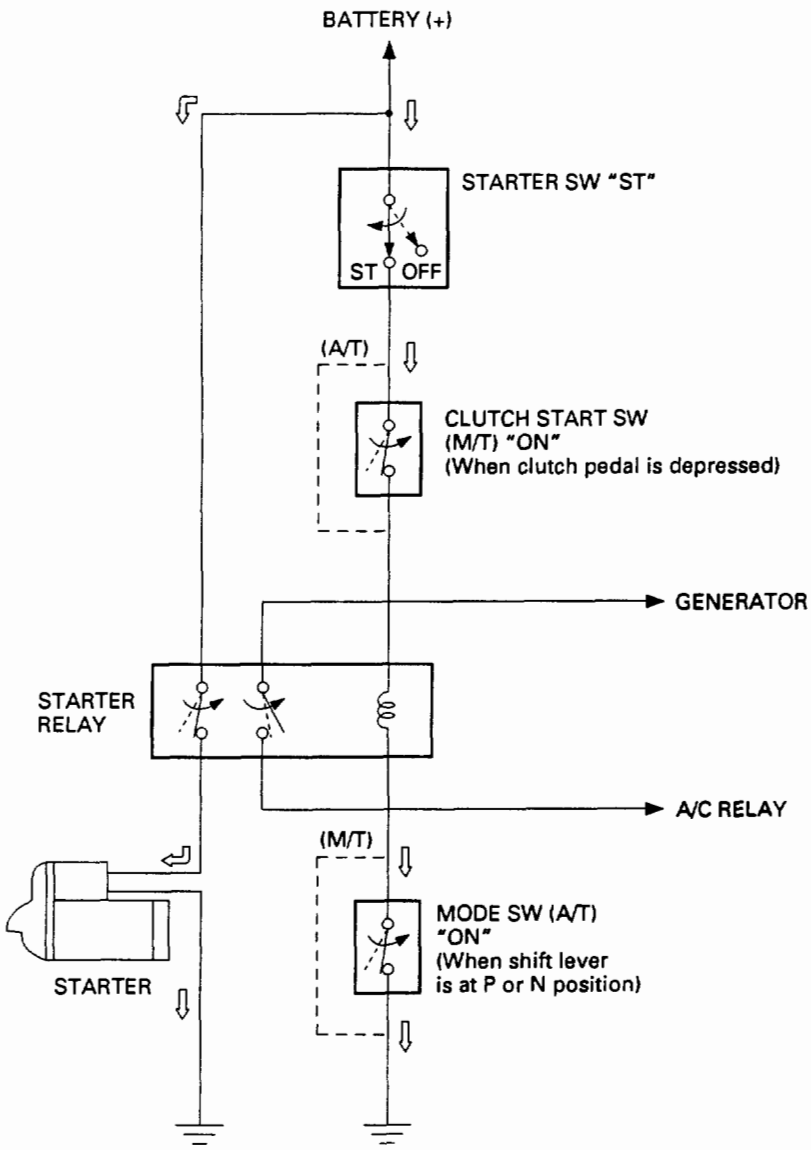

NOTE: Arrow marks " ⇨ " indicate the direction of current

Fig. 8-54

PARTS LOCATION

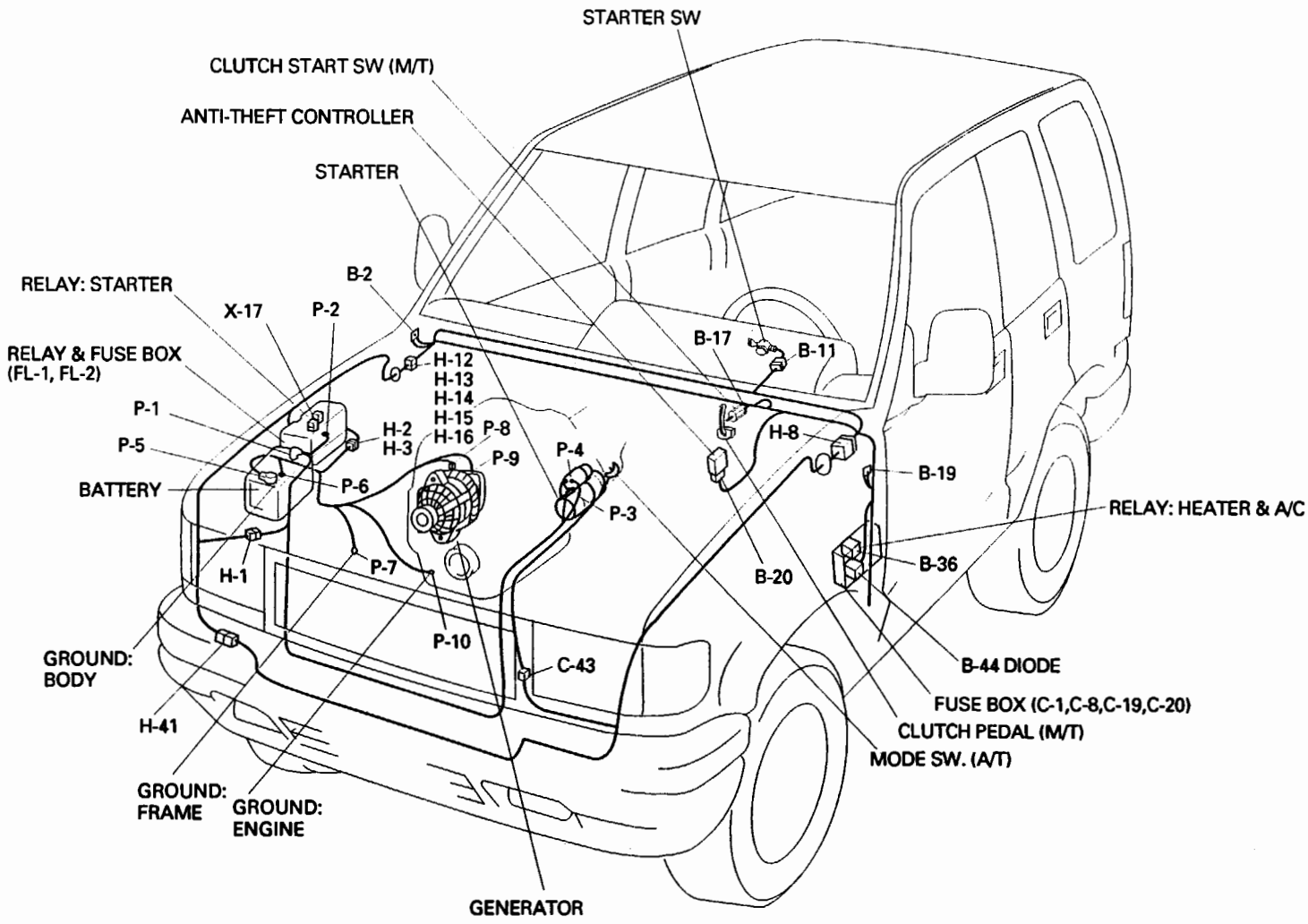

Fig. 8-55

CIRCUIT DIAGRAM

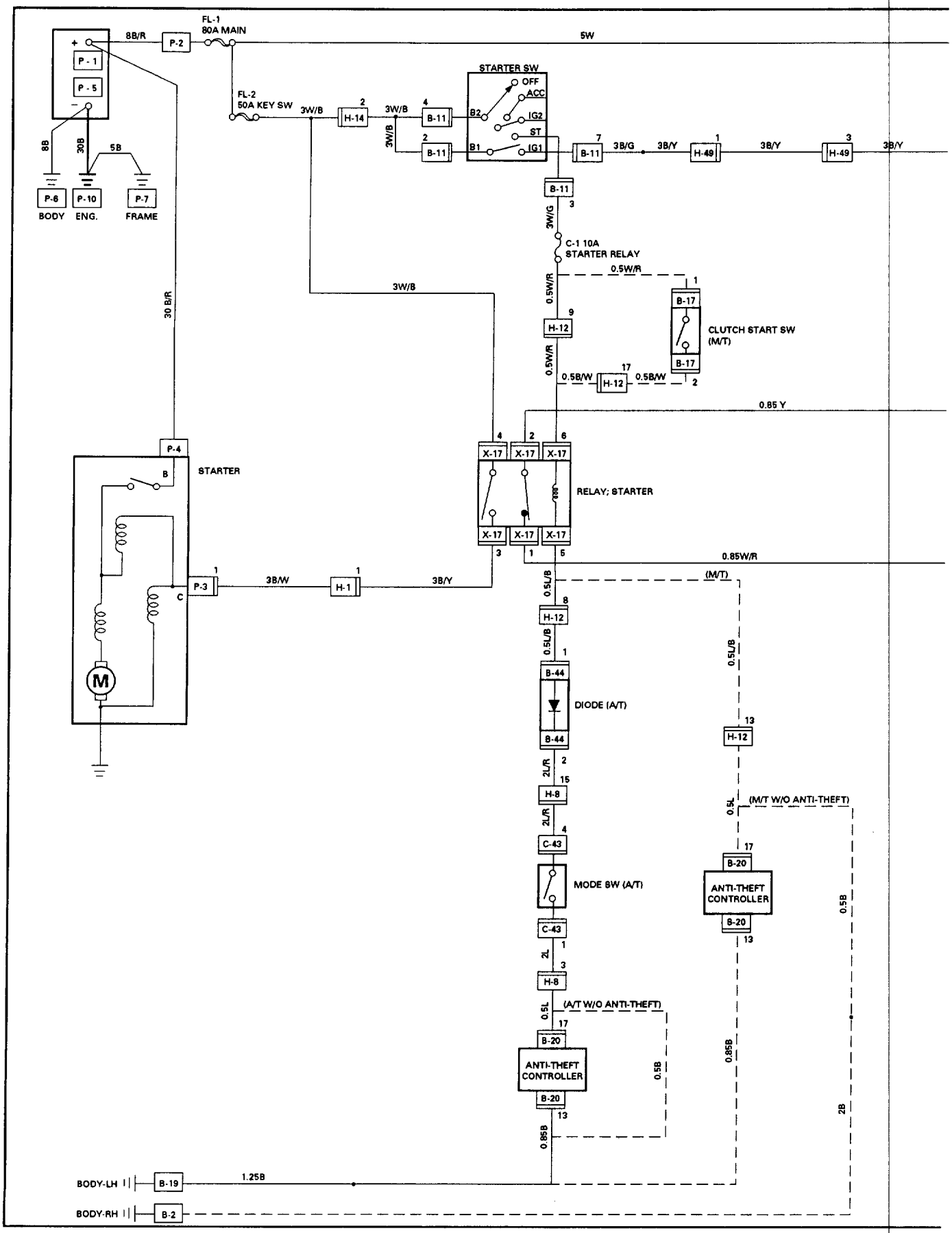

Fig. 8-56

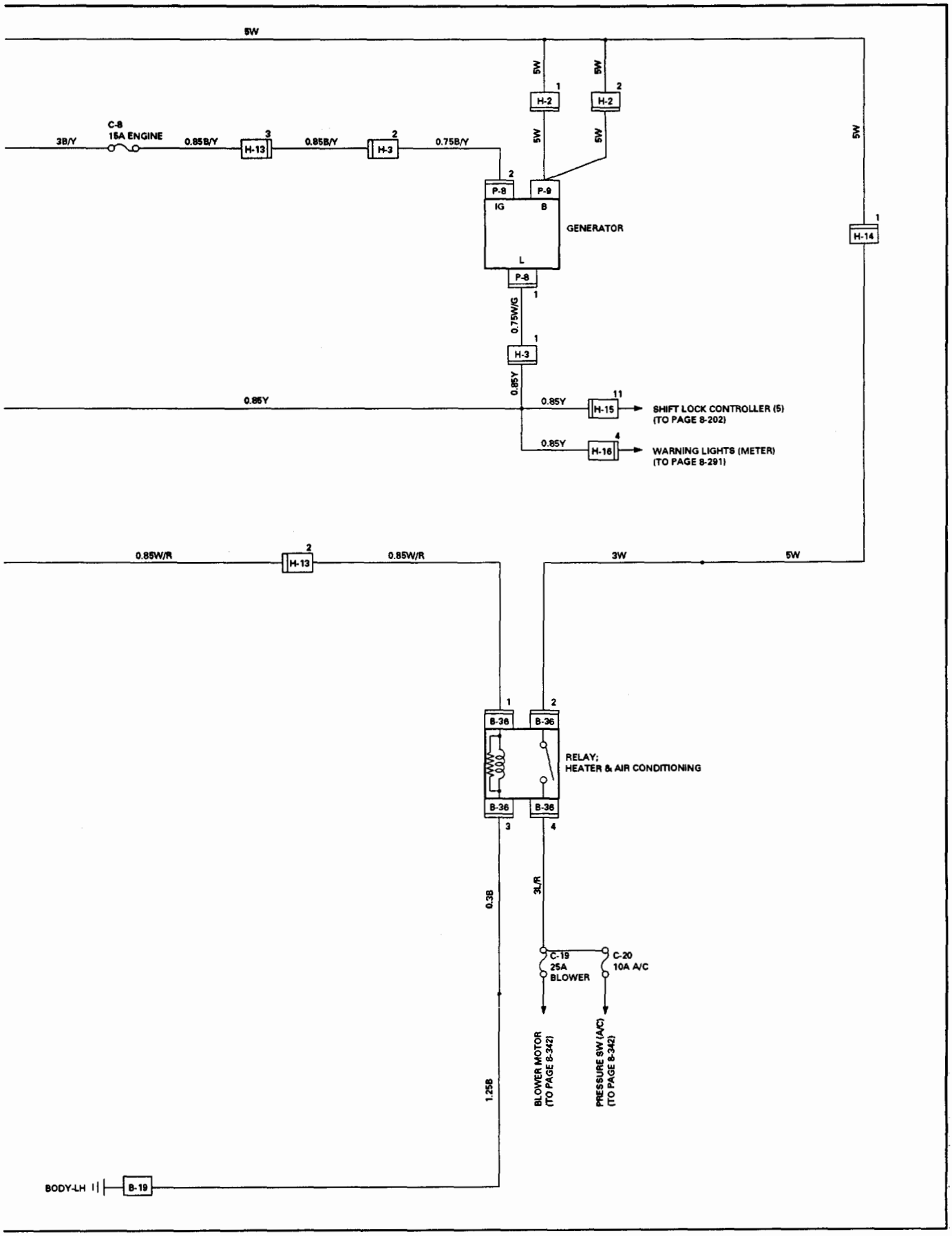
5W
5W
5W
H-2
H-2
5W
5W
5W
C-8
15A ENGINE
3B/Y
0.85B/Y
H-13
0.85B/Y
H-3
0.75B/Y
P-8
P-9
IG
B
GENERATOR
L
P-8
H-14
0.75W/G
H-3
0.85Y
0.85Y
0.85Y
H-15
SHIFT LOCK CONTROLLER (5)
(TO PAGE 8-202)
0.85Y
H-16
WARNING LIGHTS (METER)
(TO PAGE 8-291)
0.85W/R
H-13
0.85W/R
3W
5W
B-36
B-36
RELAY;
HEATER & AIR CONDITIONING
B-36
B-36
0.3B
3L/R
C-19
25A
BLOWER
C-20
10A A/C
BLOWER MOTOR
(TO PAGE 8-342)
PRESSURE SW (A/C)
(TO PAGE 8-342)
1.25B
BODY-LH
B-19

CONNECTOR LIST

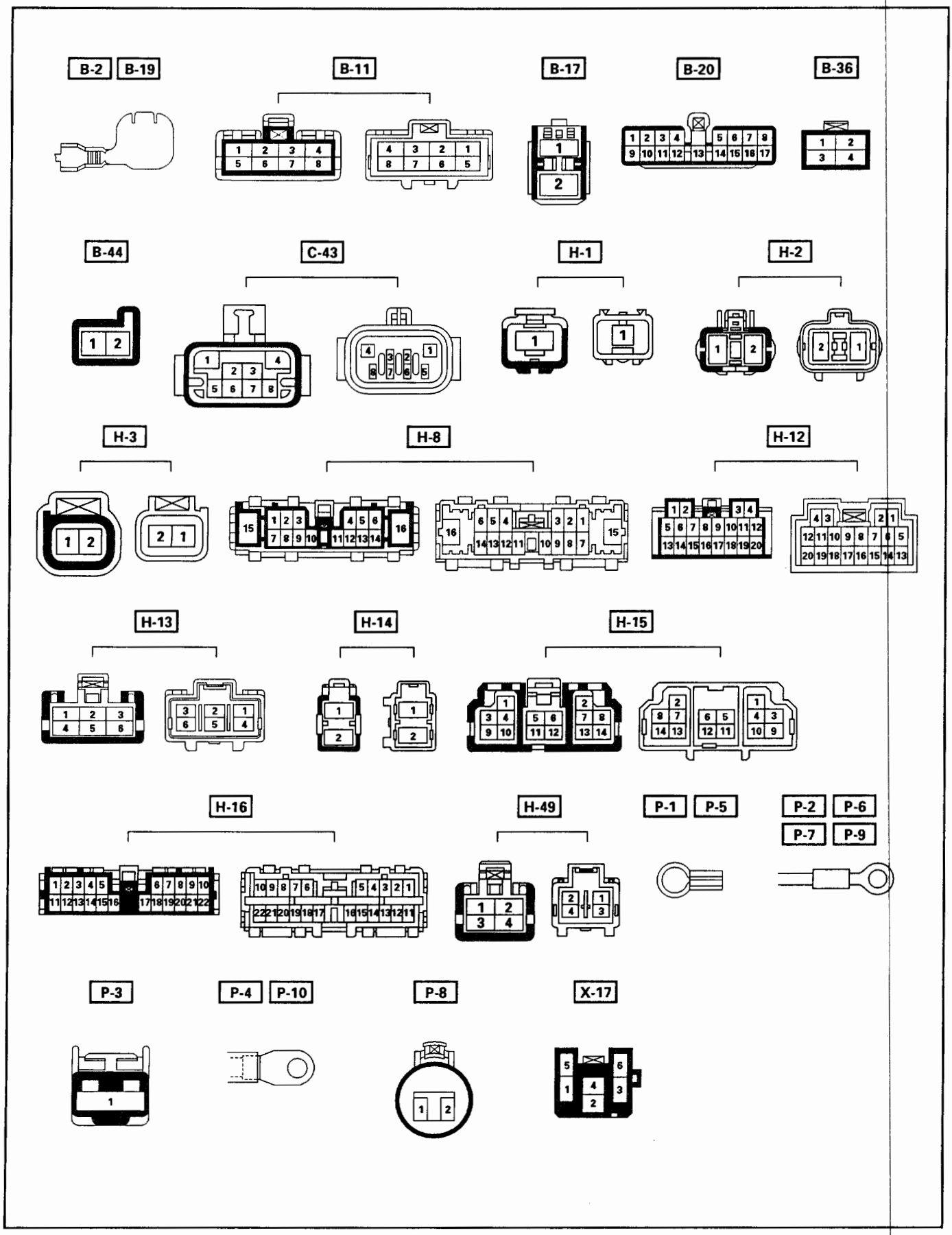

Fig. 8-57

STARTER SWITCH (FIG. 8-59)

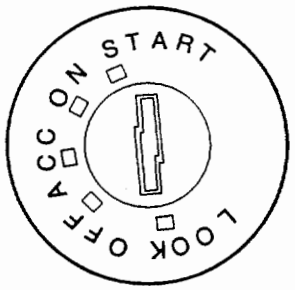

Fig. 8-58

The starter switch positions are LOCK, OFF, ACC, ON and START. Turning the starter key to these positions provides a circuit for starting the engine, the operation of accessories, or stops the engine.

INSPECTION

1. Check the continuity between the starter switch connector terminals. (Fig. 8-59)
   Repair or replace the switch when the result of inspection is found abnormal.

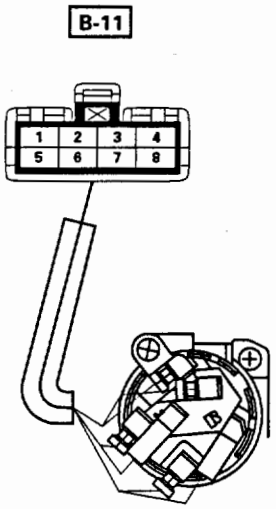

Starter switch key position \ Terminal No.		4 (B2)	1 (ACC)	5 (IG2)	3 (ST)	2 (B1)	7 (IG1)	8 (KEY⊕)	6 (KEY⊖)
LOCK	Removed								
	Inserted								
OFF									
ACC		○—○						○—○	
ON		○—○	○	○		○—○			
START		○		○—○		○—○			

Fig. 8-59

REMOVAL (FIG. 8-60)

Preparation: Disconnect the battery ground cable.

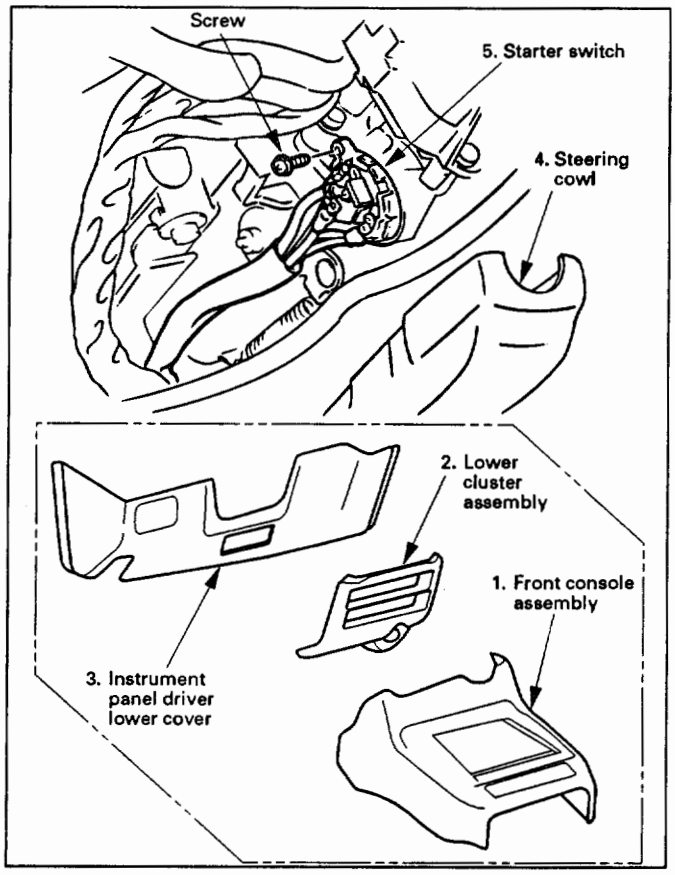

Fig. 8-60

1. **Front console assembly**
   - Remove four screws.
   - Remove the transmission shift lever knob.
   - Remove the transfer shift lever knob.
   - Disconnect the seat heater switch connectors (If so equipped).
   - Disconnect the "POWER & WINTER" switch connectors (A/T only).
2. **Lower cluster assembly**
   - Remove three screws.
   - Disconnect the cigar lighter connectors.
   - Remove the cigar lighter illumination bulb socket.
   - Disconnect the ashtray illumination bulb connector.
3. **Instrument panel driver lower cover**
   - Remove the engine hood opener.
   - Remove three screws and clip.
   - Disconnect four fasteners.
4. **Steering cowl**
   - Remove seven screws.
5. **Starter switch**
   - Disconnect the connector.
   - Remove the screw.

INSTALLATION

To install, follow the removal steps in the reverse order noting the following point.

1. When installing the steering cowl, be sure to pass the harnesses through the route as shown in the illustration so that the starter switch, the combination switch and the inflator module harness will not get caught. (Fig. 8-61)

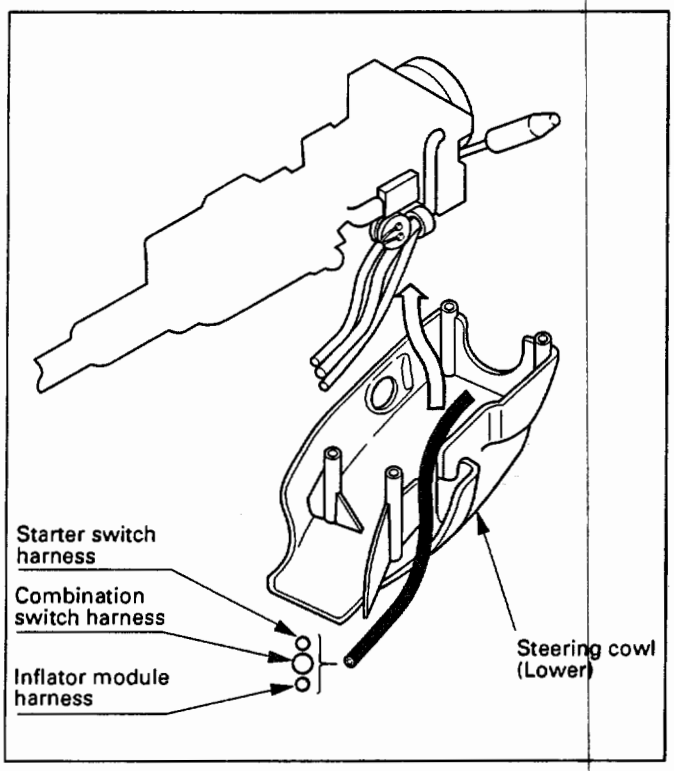

Fig. 8-61

CLUTCH START SWITCH

When the clutch pedal is depressed, the clutch start switch is turned on to form a circuit to activate the starter.

INSPECTION

Check the continuity between the clutch start switch terminals. (Fig. 8-62)
Replace the switch when the result of inspection is found abnormal.

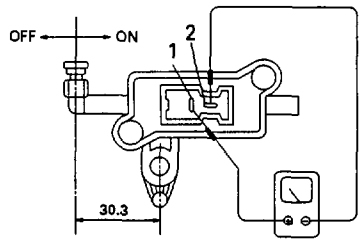

SW position \ Terminal No.	1	2
ON: Clutch pedal depressed	O	O
OFF: Clutch pedal released		

Fig. 8-62

REMOVAL (FIG.8-63)

Preparation: Disconnect the battery ground cable.

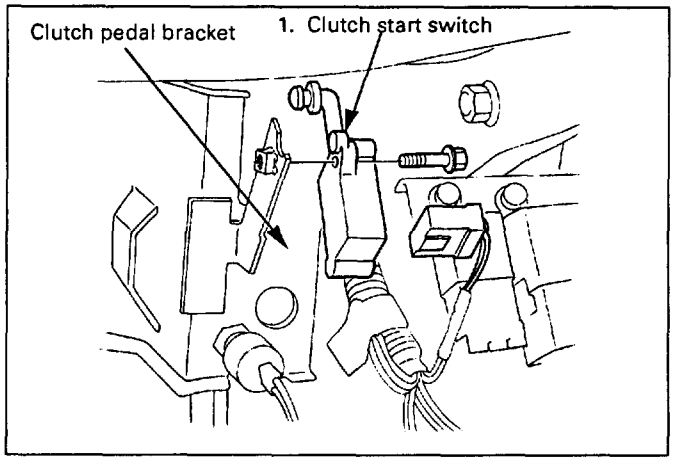

Fig. 8-63

1. **Clutch start switch**
   - Disconnect the connector
   - Loosen the lock nut, then turn the clutch start switch counterclockwise.

INSTALLATION

To install, follow the removal steps in the reverse order.

STARTER RELAY

INSPECTION

Check to see if there is any continuity between the relay terminals. (Fig. 8-64)
Replace the relay with a correct one when the result of inspection is found abnormal.

①–②	Continuity
③–④	No continuity
(When battery voltage is applied between ⑤–⑥)	
①–②	No continuity
③–④	Continuity

NOTE:
For relay removal, refer to "Connector Handling" under "NOTES FOR WORKING ON ELECTRICAL ITEMS" in this section.

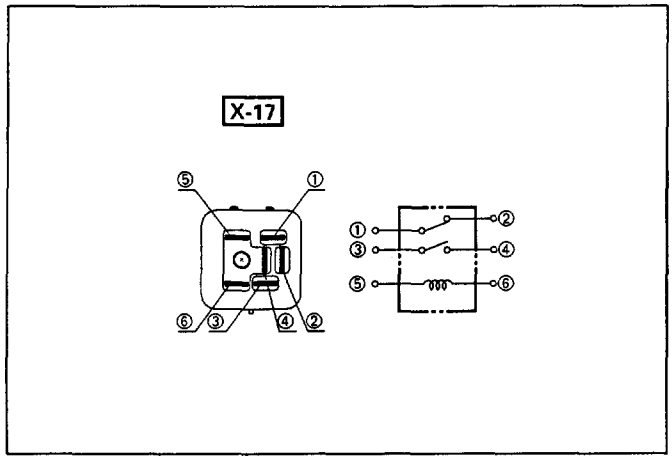

Fig. 8-64

HEATER & AIR CONDITIONING RELAY

INSPECTION

Check to see if there is any continuity between the relay terminals. (Fig. 8-65)
Replace the relay when the result of inspection is found abnormal.

②–④	No continuity
(When battery voltage is applied between ①–③)	
②–④	Continuity

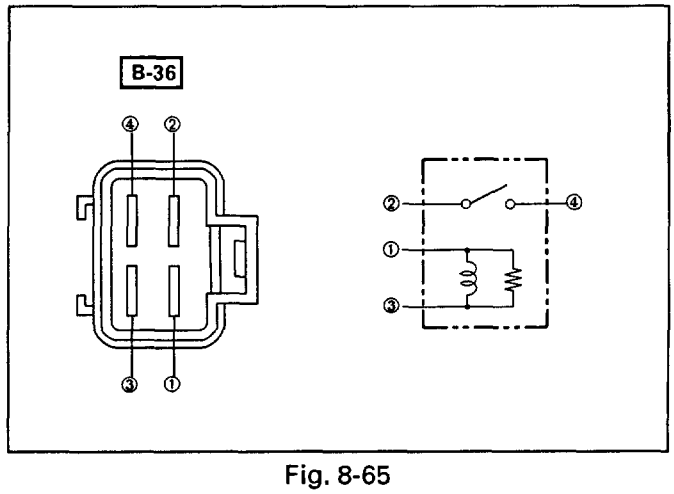

Fig. 8-65

MEMO

ENGINE CONTROL MODULE (ECM)

GENERAL DESCRIPTION

The ECM is used to control the fuel system of the vehicle, especially in controlling the following items.

1. FUEL CONTROL

The amount of fuel and air sent into the combustion chamber is controlled by controlling the fuel sent through the injector.

2. ELECTRIC FUEL PUMP (INSTALLED IN THE FUEL TANK)

The in-tank fuel pump is controlled by the ECM. When starter switch is turned on, the pump will run for 2 seconds, then stop unless the engine is cranking or running.

3. IGNITION CONTROL

The system is controlled by the spark timing control function of the ECM.

4. CIRCULATION OF EXHAUST GAS

The system controls the formation of NOx by returning a small amount of exhaust gas to the intake manifold through the control valve.

5. CONTROL OF AIR CONDITIONING (A/C)

For improved engine idling performance, the system controls the operation of the air conditioner by regulating the clutch operation of the A/C compressor in accordance with changes in operation.

6. IDLE AIR CONTROL

The system controls the IAC Valve for the desired idle speed in accordance with changes in operation.

7. DIAGNOSIS OF TROUBLES

When a sensor detects any signal that the ECM is in an abnormal condition, the ECM turns on the malfunction indicator (CHECK ENGINE) light in the meter, and stores at the same time the corresponding diagnostic trouble code (DTC) in the memory to indicate to which system or circuit the trouble represented by the DTC belongs.
The ECM inspection connector (data link connector) is used to retrieve the DTCs stored from the ECM.
Refer to Section 6 "ENGINE DIAGNOSIS" for details.

IAC: Idle air control

PARTS LOCATION-DOHC

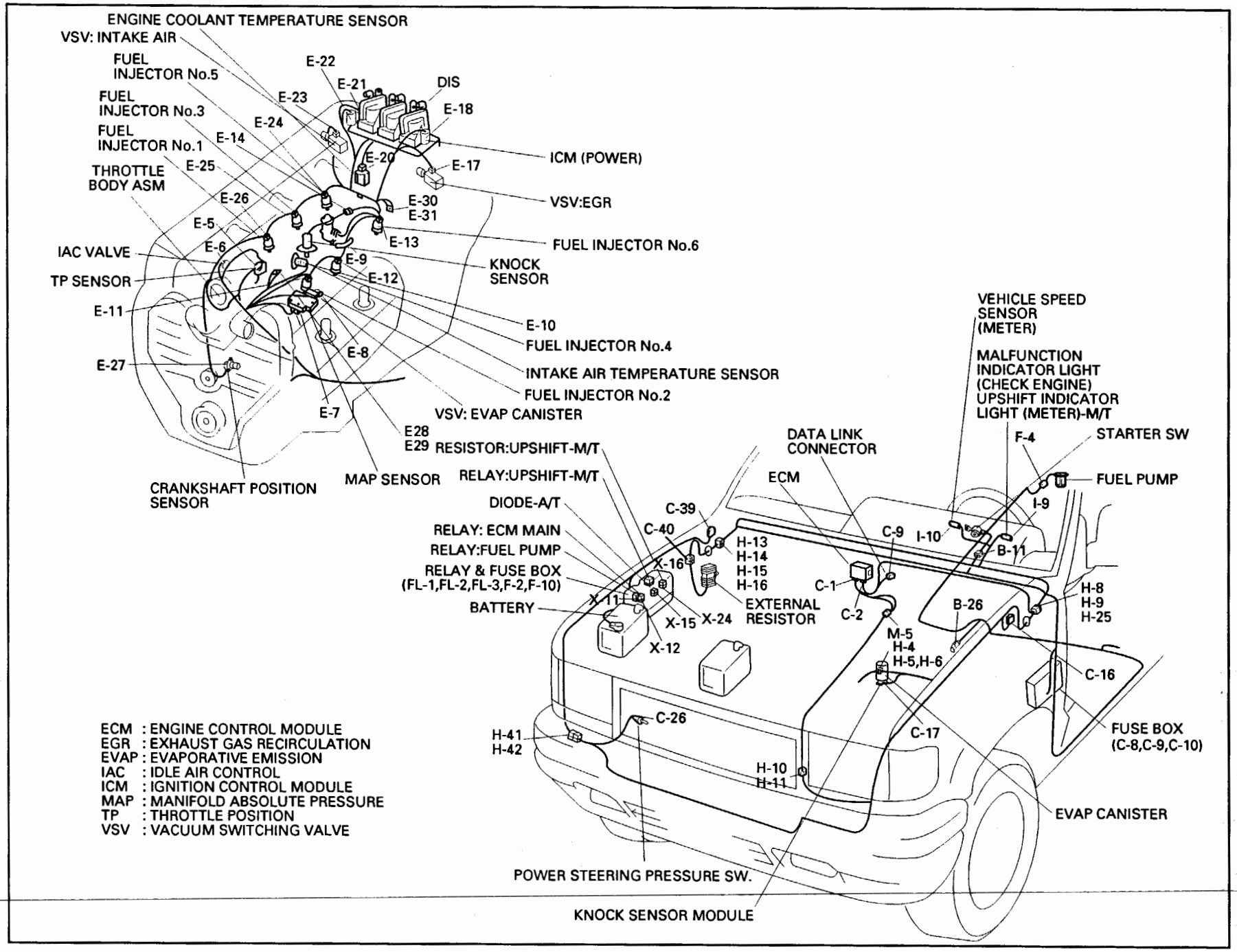

Fig. 8-66

PARTS LOCATION-SOHC

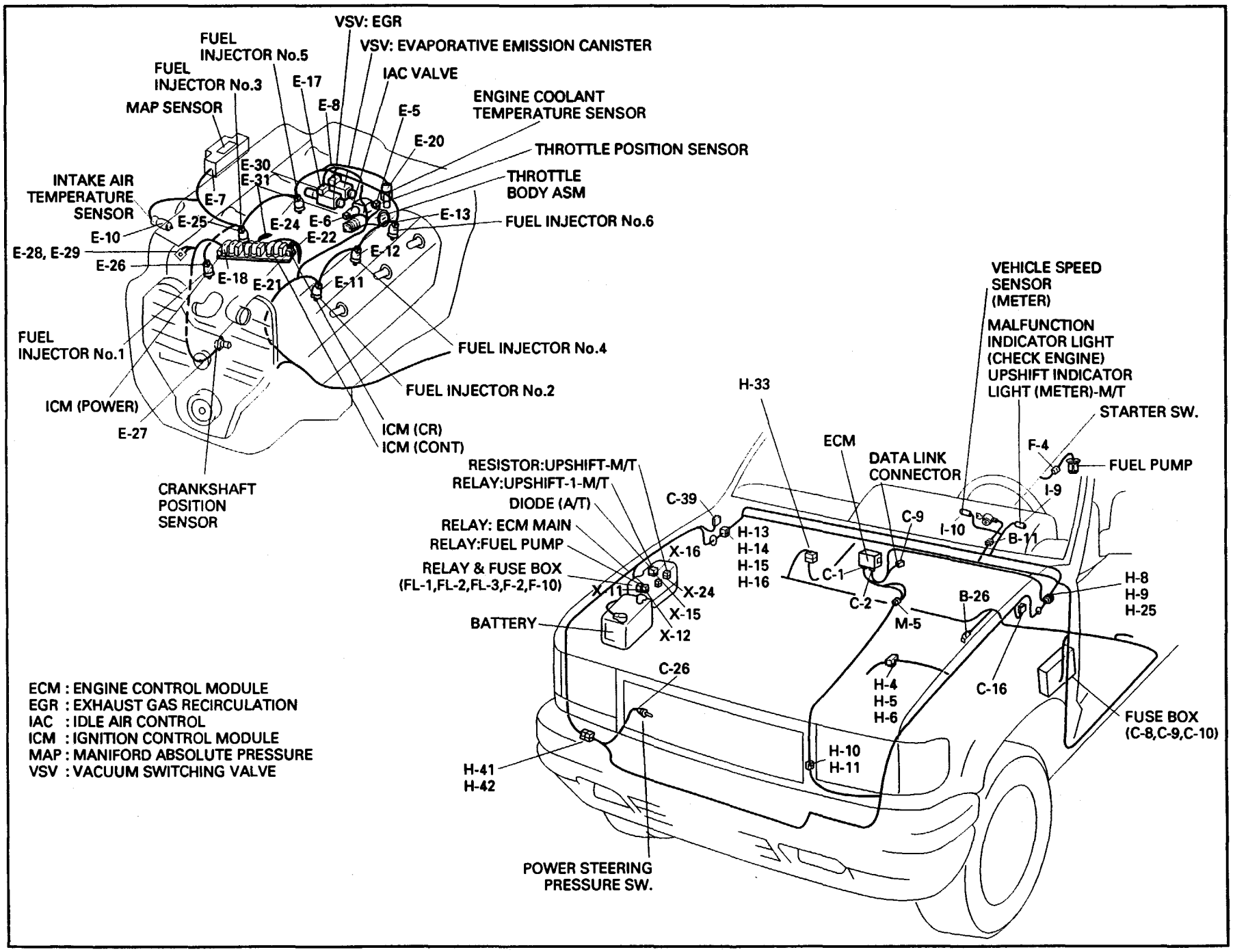

Fig. 8-67

CIRCUIT DIAGRAM-DOHC

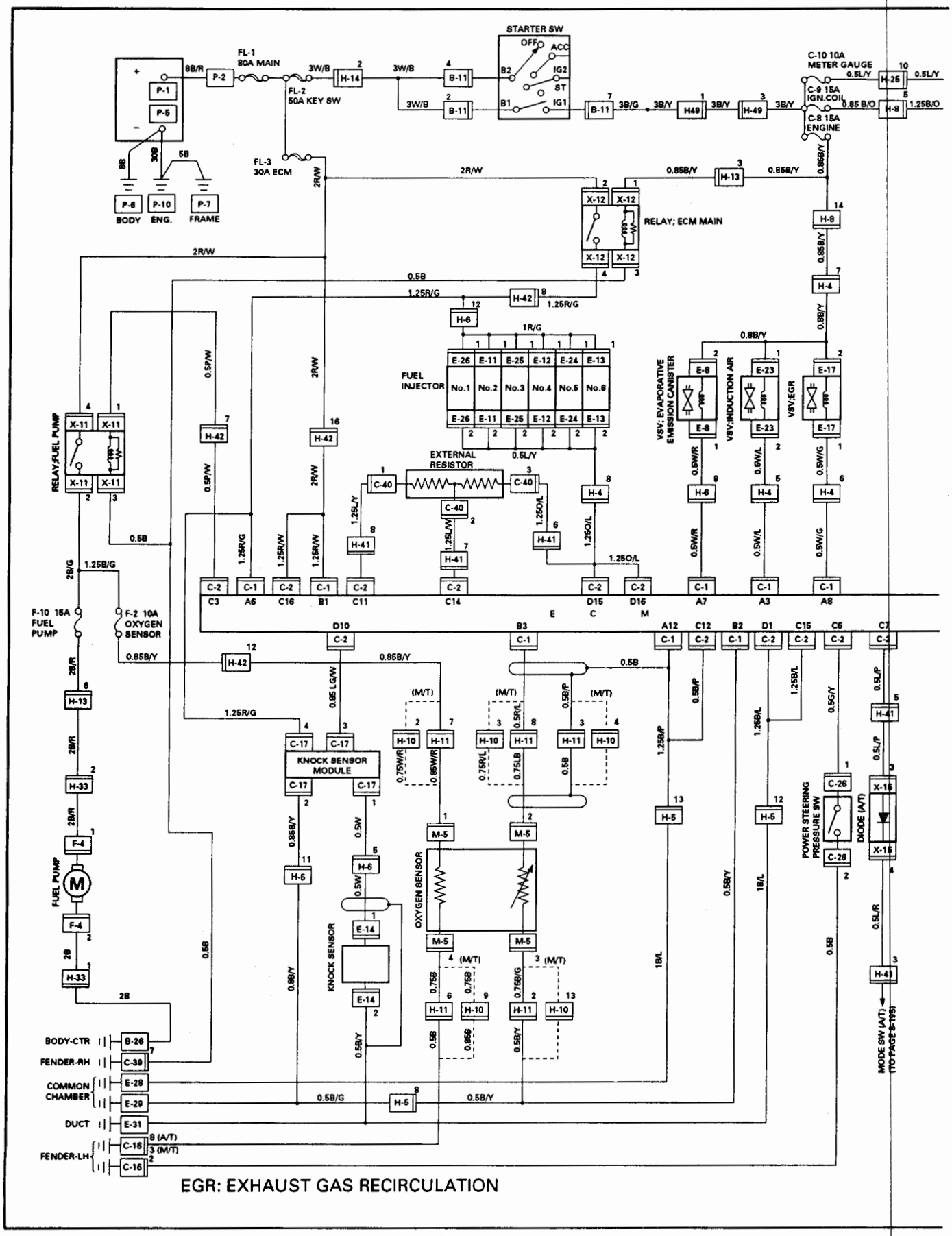

EGR: EXHAUST GAS RECIRCULATION

Fig. 8-68

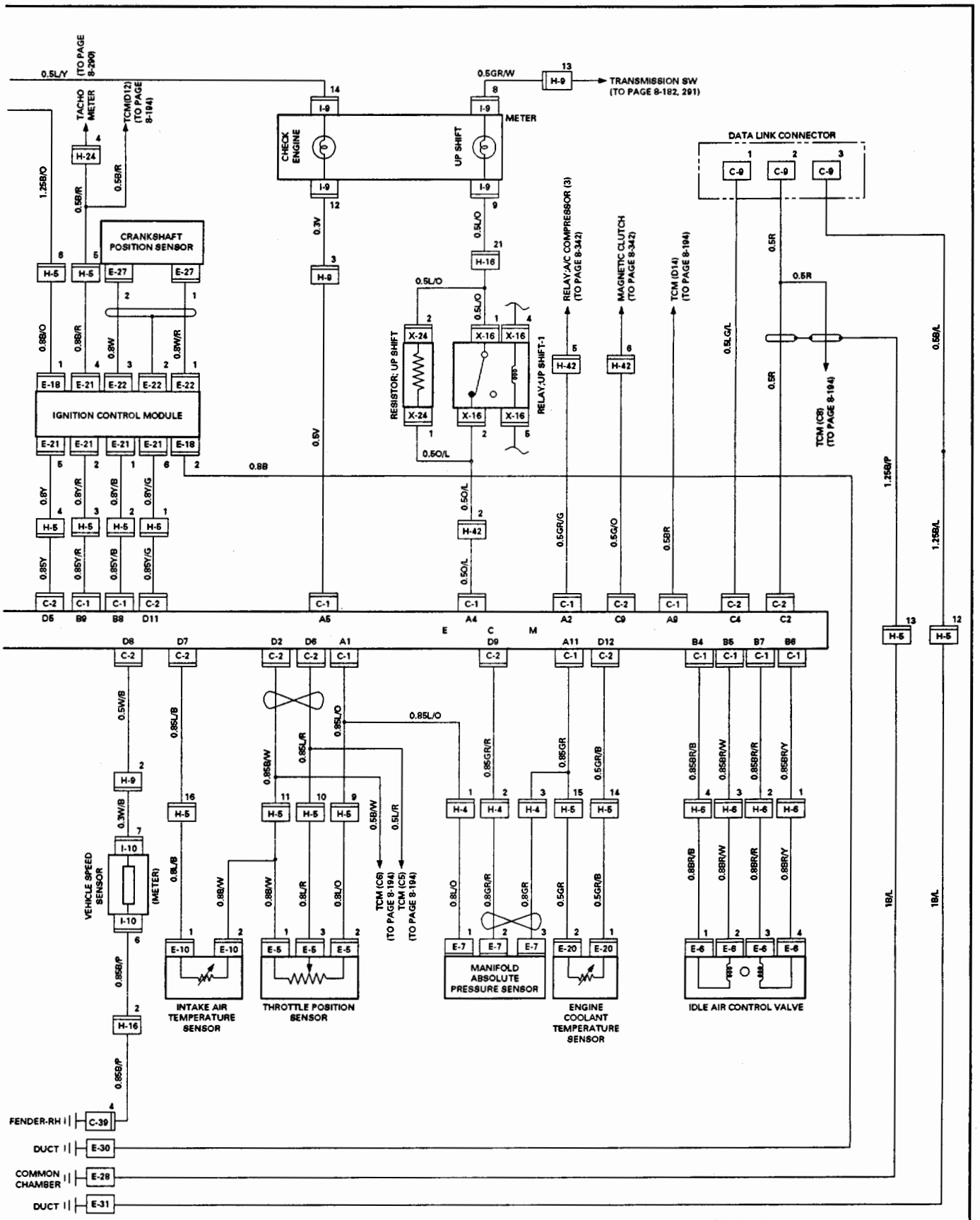

TCM: TRANSMISSION CONTROL MODULE, A/C: AIR CONDITIONING

CIRCUIT DIAGRAM-SOHC

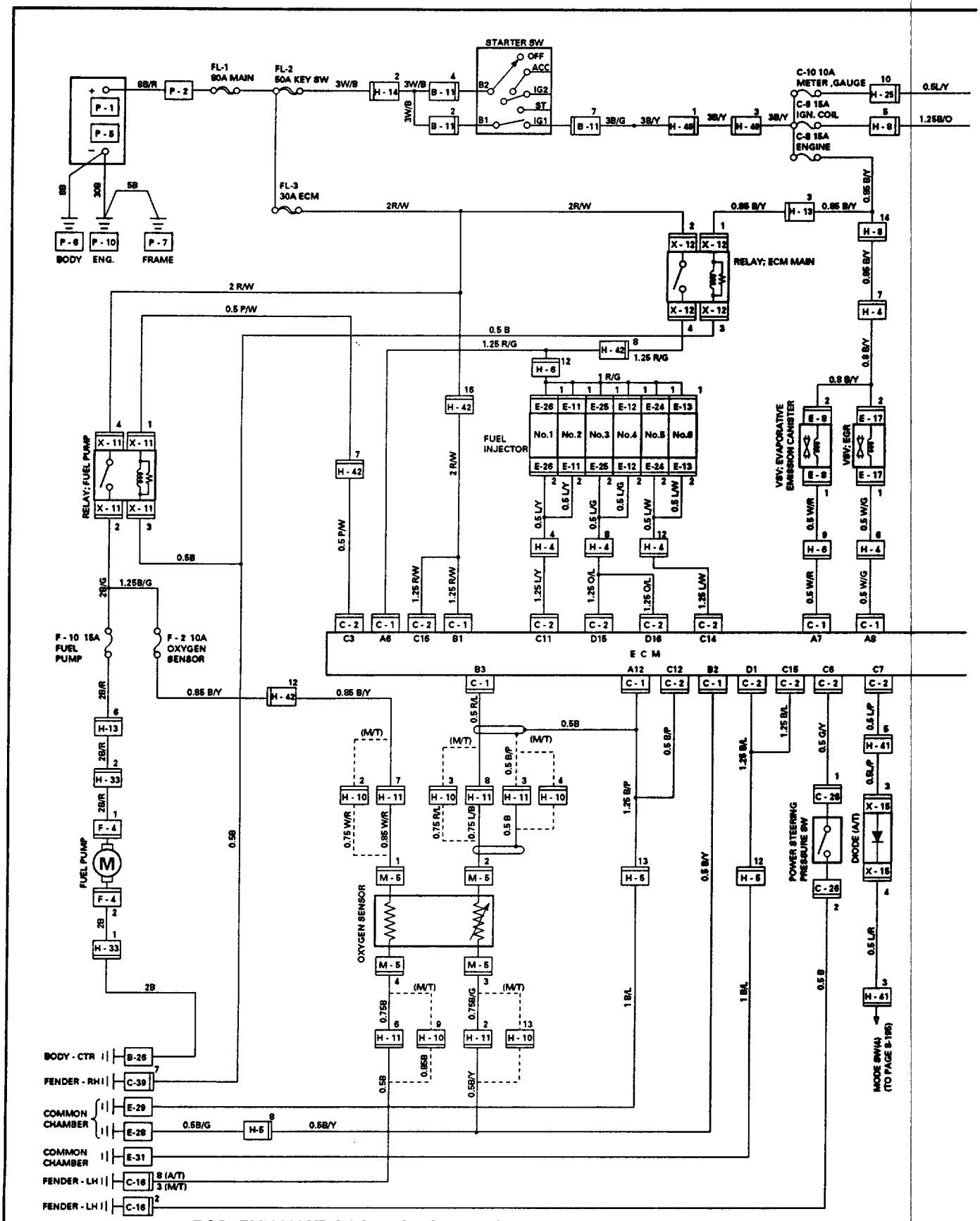

EGR: EXHAUST GAS RECIRCULATION

Fig. 8-69

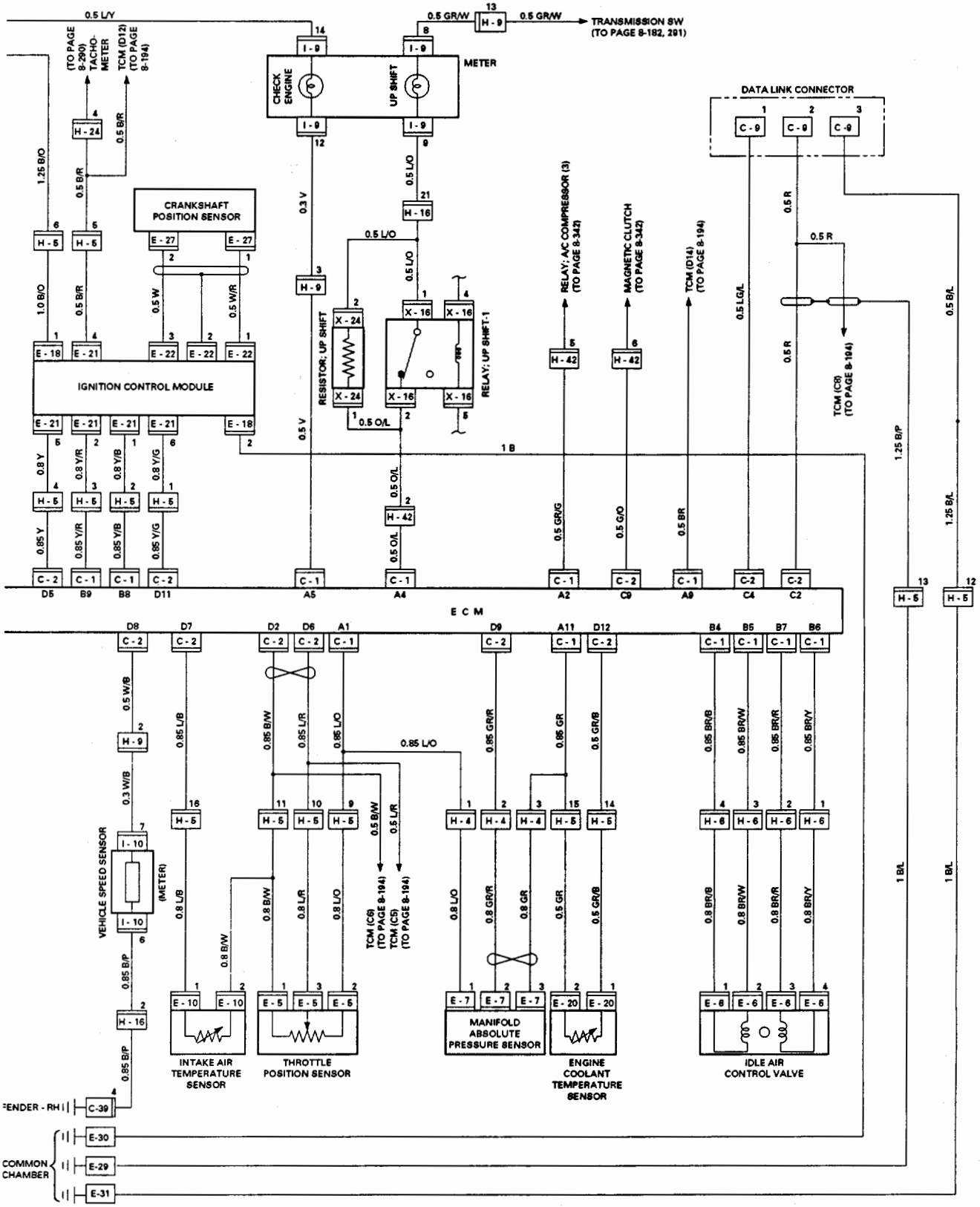

TCM: TRANSMISSION CONTROL MODULE, A/C: AIR CONDITIONING

CONNECTOR LIST

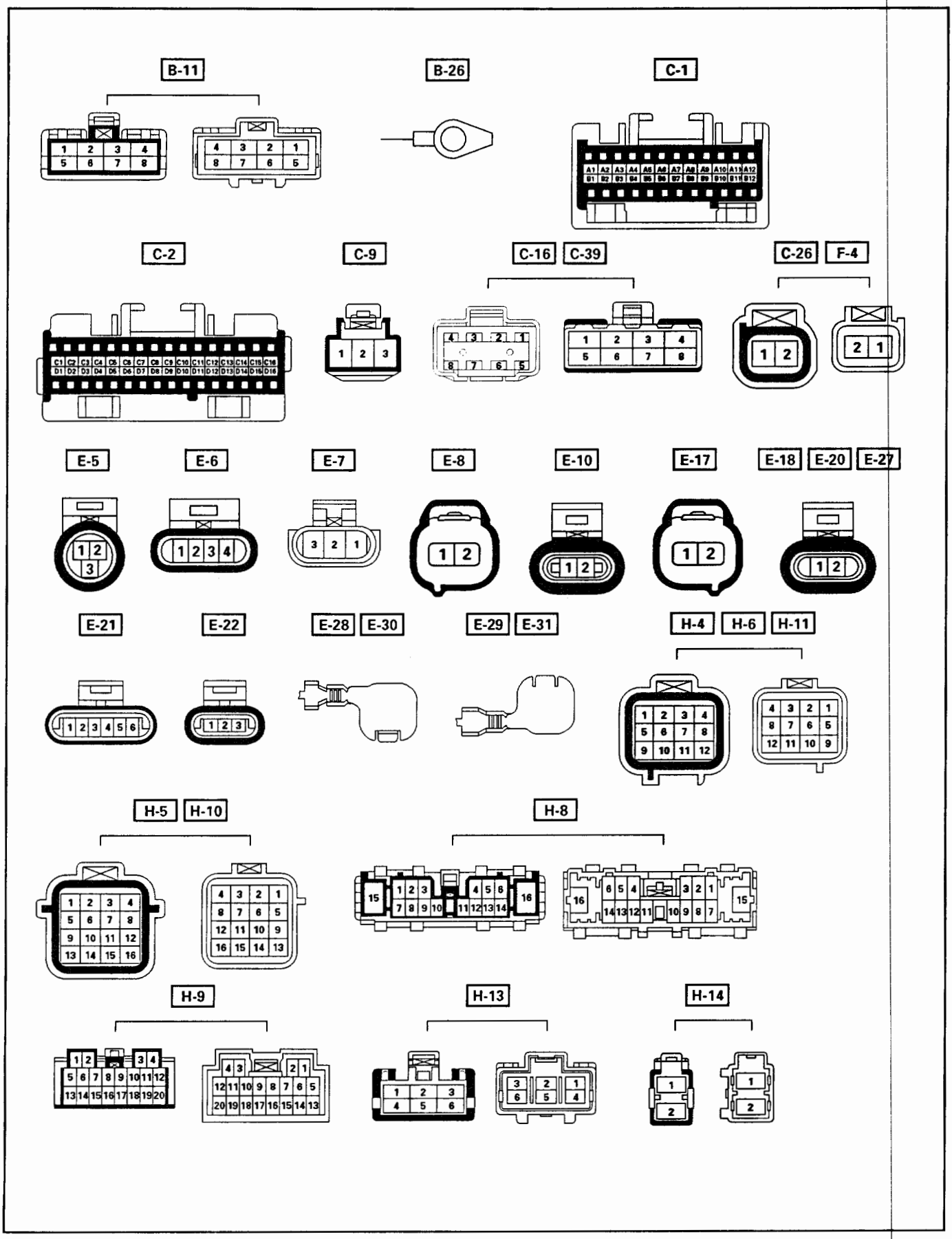

Fig. 8-70

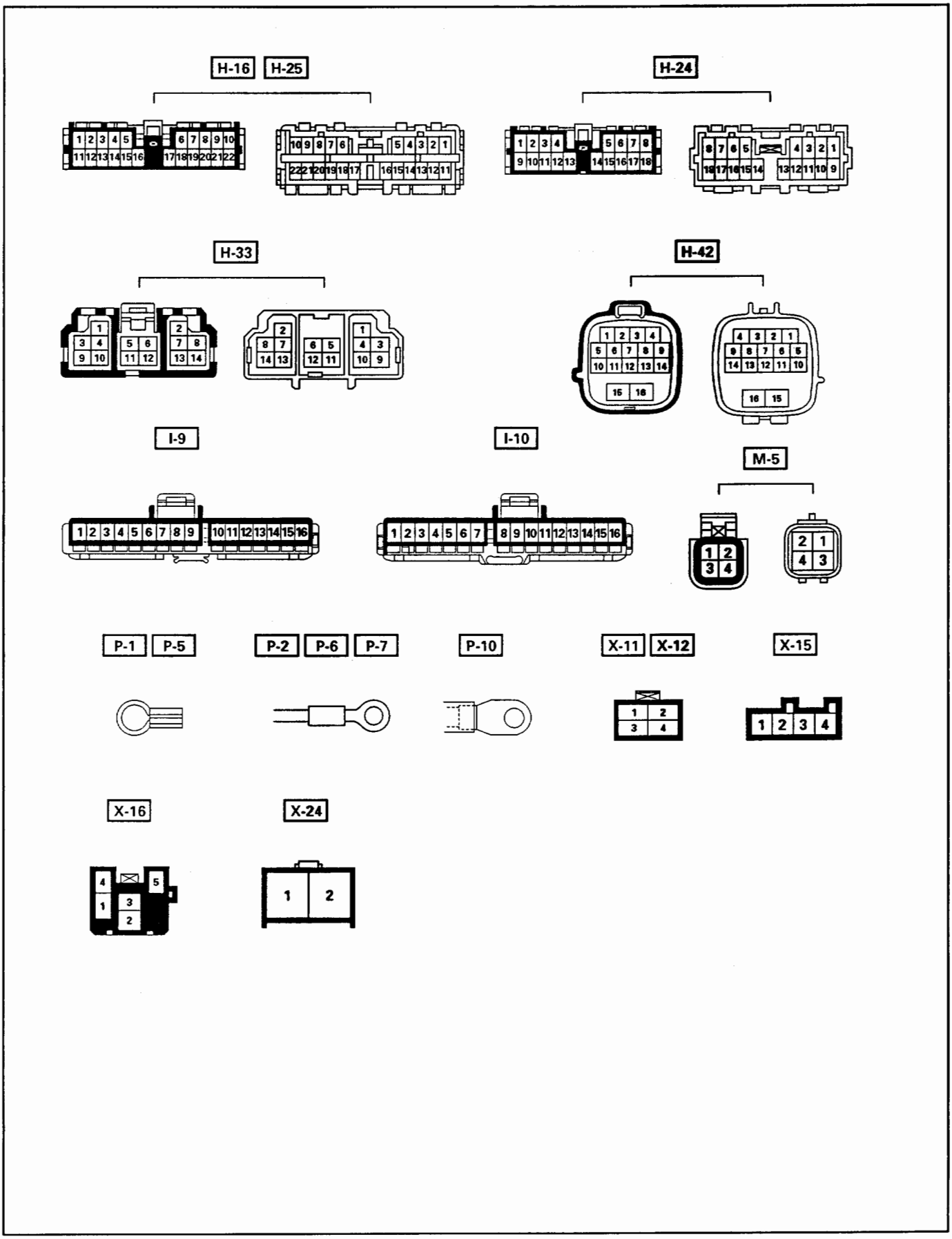
H-16
H-25
H-24
H-33
H-42
I-9
I-10
M-5
P-1
P-5
P-2
P-6
P-7
P-10
X-11
X-12
X-15
X-16
X-24

Fig. 8-71

STARTER SWITCH

Refer to START AND CHARGING in this section.

DATA LINK CONNECTOR

The data link connector (white) is used to retrieve the diagnostic trouble codes stored from the engine control module. The data link connector is installed at inside of the instrument panel driver lower cover. (Fig. 8-72)

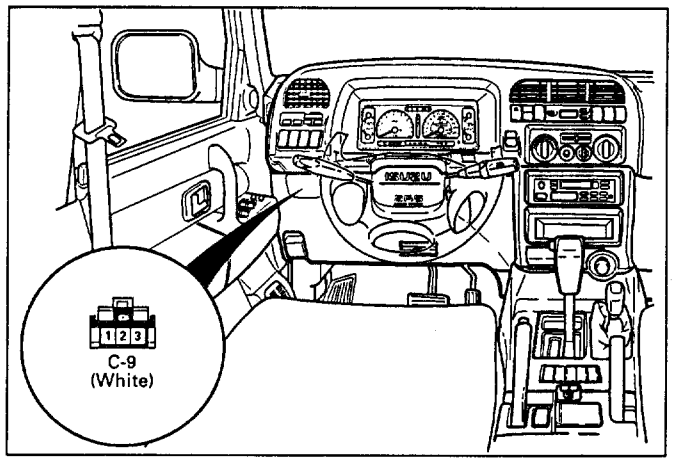

Fig. 8-72

FUEL PUMP RELAY
ENGINE CONTROL MODULE MAIN RELAY

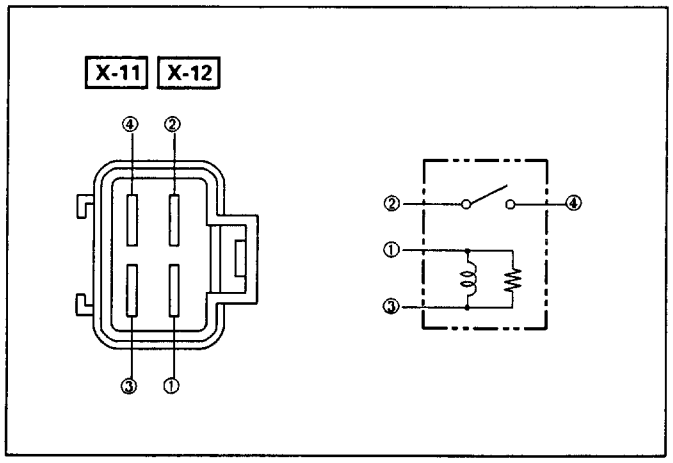

Fig. 8-73

INSPECTION

Check to see if there is any continuity between the relay terminals. (Fig. 8-73)
Replace the relay when the result of inspection is found abnormal.

②–④ · · · · · · · · No continuity
(When battery voltage is applied between ①–③)
②–④ · · · · · · · · Continuity

NOTE:
For relay removal, refer to "Connector Handling" under "NOTES FOR WORKING ON ELECTRICAL ITEMS" in this section.

UPSHIFT-1 RELAY

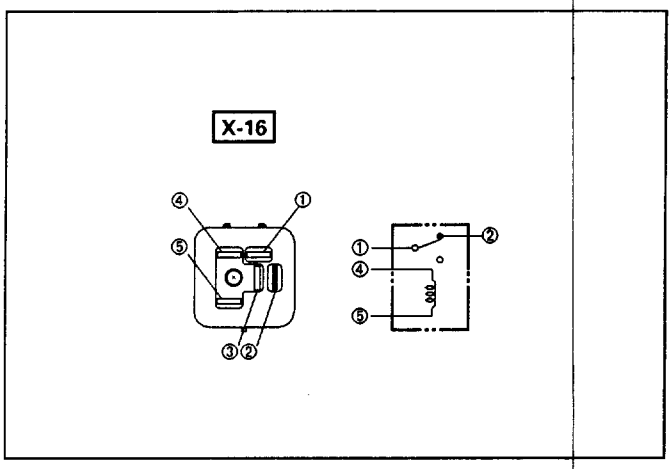

Fig. 8-74

INSPECTION

Check to see if there is any continuity between the relay terminals. (Fig. 8-74)
Replace the relay when the result of inspection is found abnormal.

①–② · · · · · · · · Continuity
(When battery voltage is applied between ④–⑤)
①–② · · · · · · · · No continuity

DIODE

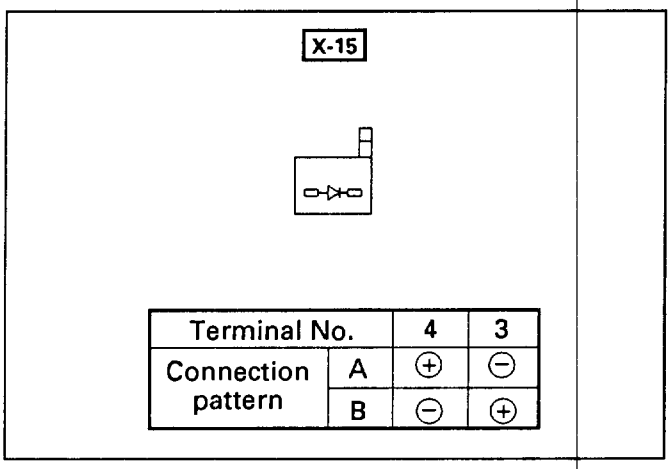

Terminal No.		4	3
Connection pattern	A	⊕	⊖
	B	⊖	⊕

Fig. 8-75

INSPECTION

There should be continuity in either A or B when a circuit tester is connected with diode terminal. (Fig. 8-75)
Replace the diode when the result of inspection is found abnormal.

REMOVAL (FIG. 8-76)

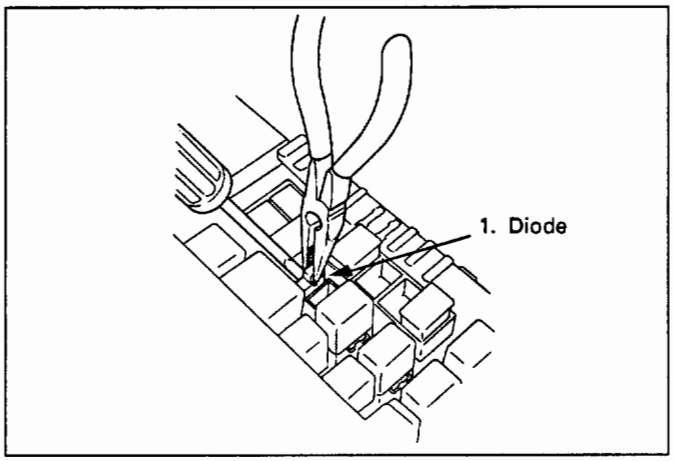

Fig. 8-76

Preparation: Disconnect the battery ground cable.

1. **DIODE**
   - Insert a thin screwdriver between the diode on the lock rib side and the connector housing to remove it.

HEADLIGHT AND FOG LIGHT

GENERAL DESCRIPTION

The circuit consists of the headlight, fog light, lighting switch, dimmer-passing switch, fog light switch, high-beam indicator, lighting relay, tail relay and fog light relay. When the lighting switch is turned on by setting it at the headlight position, the lighting relay is activated to turn on the headlight. The optical axis of the headlight can be turned up or down by operating the dimmer switch while the head light is on.
The passing switch is independent of the lighting switch, and the optical axis of the passing light can be turned up only while the switch lever is pulled up and held in this state.
When the fog light switch is turned on while the headlight on at low-beam, the fog light relay is activated to turn on the fog light.

OPERATION OF THE CIRCUIT

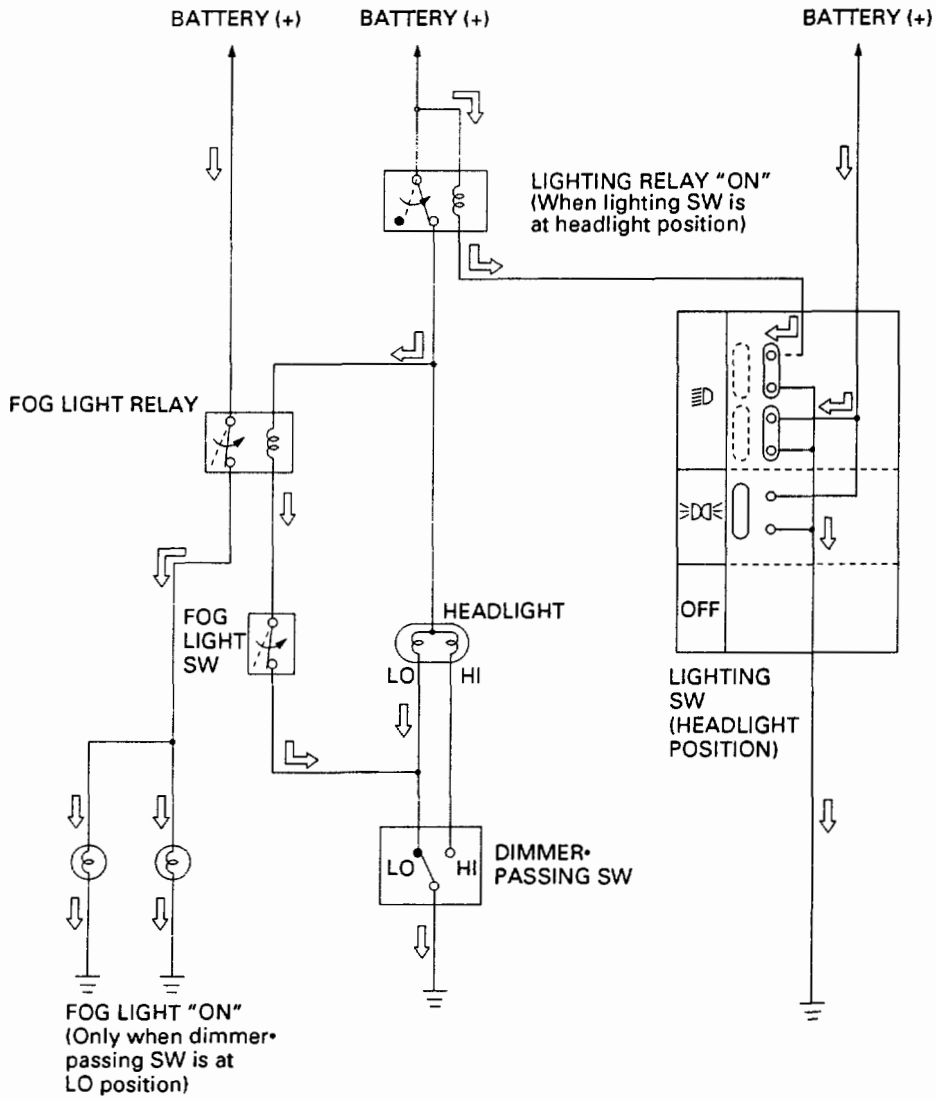

NOTE: Arrow marks "⇨" indicate the direction of current

Fig. 8-77

PARTS LOCATION

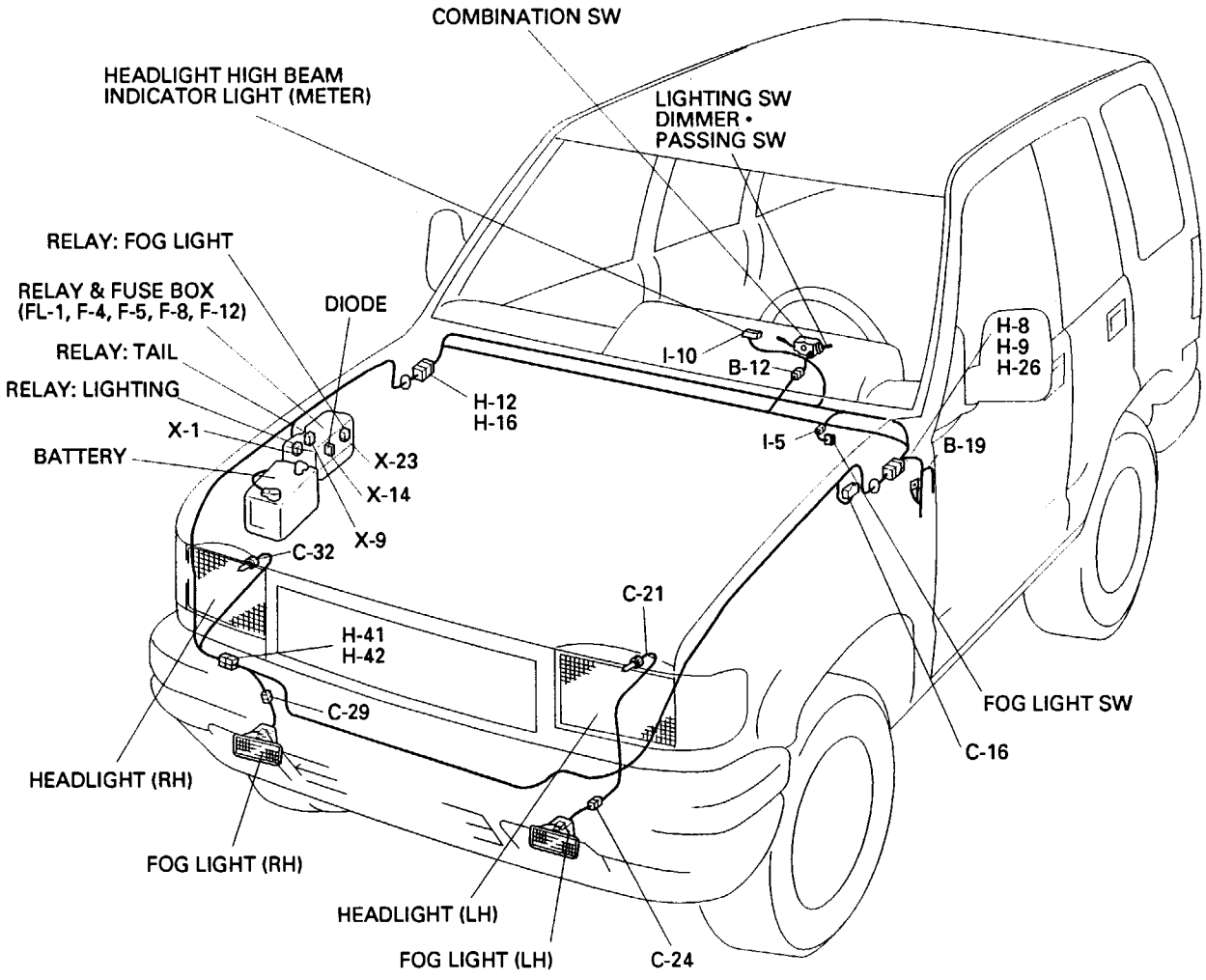

Fig. 8-78

CIRCUIT DIAGRAM

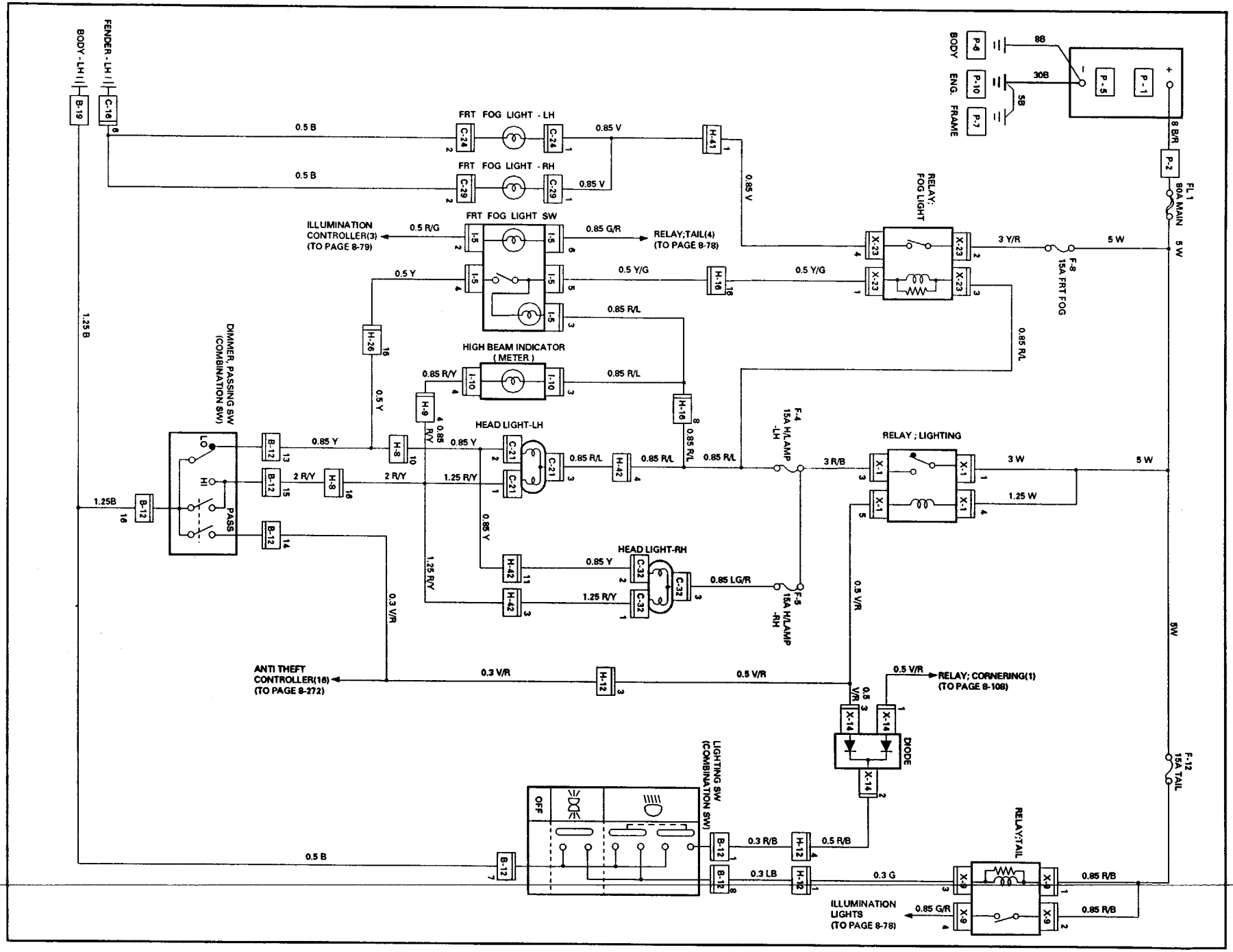

Fig. 8-79

CONNECTOR LIST

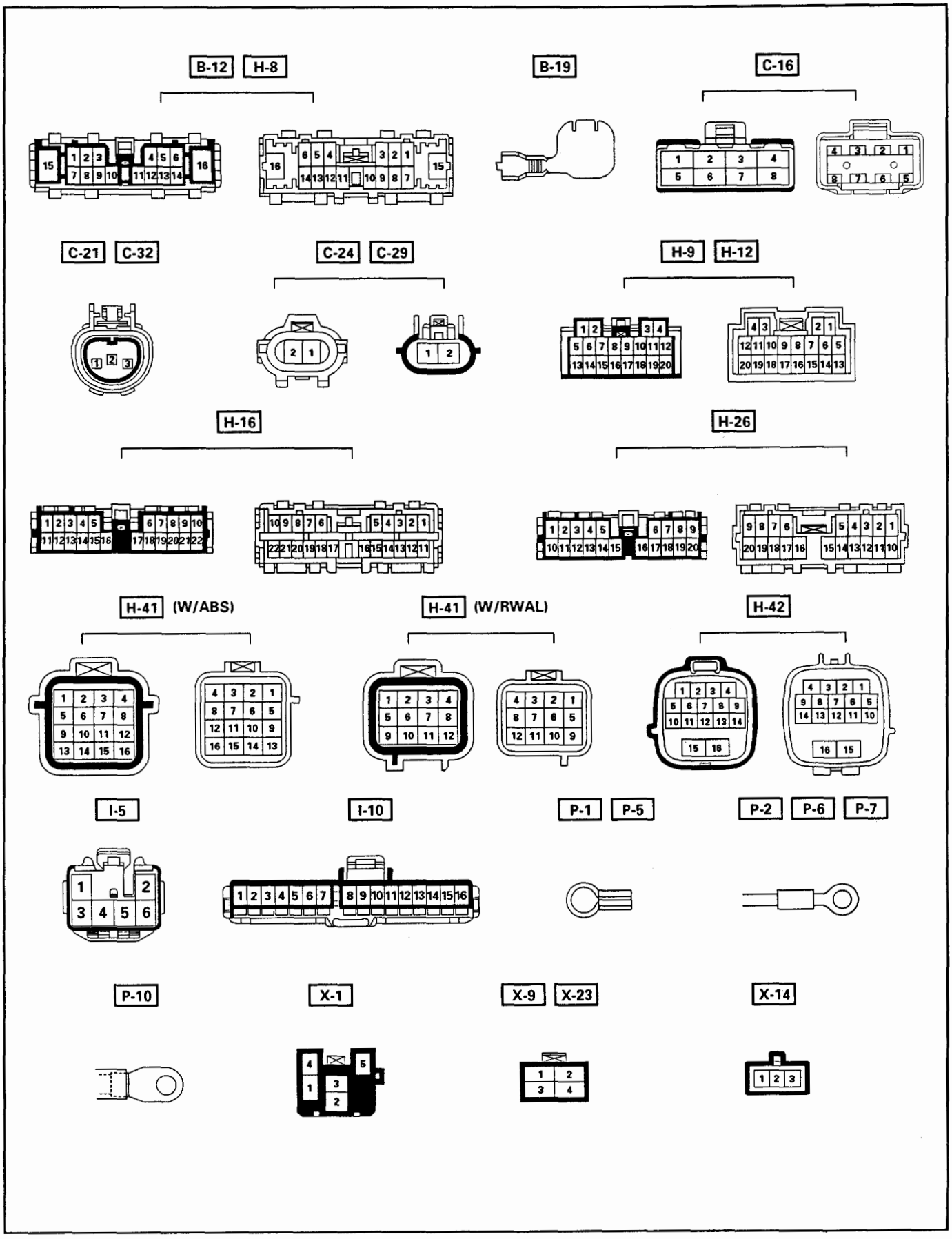

Fig. 8-80

DIAGNOSIS

QUICK CHART FOR CHECK POINTS

1. Headlight

Trouble mode \ Check point	Fuse F–4 (15A)	Fuse F–5 (15A)	Lighting relay	Lighting SW	Dimmer• Passing SW	Headlight bulb LH	Headlight bulb RH	Cable harness
1–1. Both Headlights inoperative			○ (1)	○ (3)	○ (4)			○ (2)
1–2. Headlight on the left (or right) side inoperative	○ (1)	○ ((1))				○ (2)	○ ((2))	○ (3)
1–3. Headlights in low-beam inoperative					○ (1)			○ (2)
1–4. Headlights in high-beam inoperative					○ (1)			○ (2)
1–5. Headlight beam does not change					○ (1)			○ (2)
1–6. Headlights remain on when the lighting switch is turned off			○ (1)	○ (2)				○ (3)
1–7. Headlights come on with the lighting SW at the parking light position				○ (1)				

NOTE: Figure in parenthesis "( )" indicates the order of inspection.

2. Fog light

Trouble mode \ Check point	Fuse F–8 (15A)	Fog light relay	Fog light switch	Fog light bulb LH	Fog light bulb RH	Cable harness
2–1. (While the headlight is on in low–beam) Both fog lights are inoperative	○ (1)	○ (2)	○ (3)			○ (4)
2–2. (While the headlight is on in low–beam) Fog light on the left (or right) side is inoperative				○ (1)	○ ((1))	○ (2)

NOTE: Figure in parenthesis "( )" indicates the order of inspection.

1-1. BOTH HEADLIGHTS INOPERATIVE

- IS THE LIGHTING RELAY NORMAL?

YES

- IS B-19 GROUNDED SECURELY?

NO

REPLACE THE LIGHTING RELAY

YES

- IS THE DIODE NORMAL?

NO

GROUND IT SECURELY

YES

- DISCONNECT THE LIGHTING SW CONNECTOR
- IS THE BATTERY VOLTAGE APPLIED BETWEEN THE HARNESS SIDE CONNECTOR 1 B-12 AND GROUND?

NO

REPLACE THE DIODE

YES

- REMOVE THE LIGHTING SW
- IS THERE CONTINUITY BETWEEN 1 B-12 AND 7 B-12 WHEN SETTING THE LIGHTING SW AT THE HEADLIGHT POSITION ?

NO

REPAIR A POOR CONNECTION AT THE CONNECTORS OR AN OPEN CIRCUIT BETWEEN THE FUSUBLE LINK FL-1 (80A) AND 1 B-12

YES

REPAIR A POOR CONNECTION AT THE CONNECTORS OR AN OPEN CIRCUIT BETWEEN THE HARNESS SIDE CONNECTOR 7 B-12 AND B -19 (GROUND) OF THE LIGHTING SW

NO

REPAIR OR REPLACE THE LIGHTING SW

1-2. HEADLIGHT ON THE LEFT (OR RIGHT) SIDE INOPERATIVE

- IS THE FUSE F-4 (15A) (OR F-5 15A) NORMAL?

YES

- IS THE HEADLIGHT BULB ON THE LEFT (OR RIGHT) SIDE NORMAL?

YES

REPAIR A POOR CONNECTION AT THE CONNECTORS OR AN OPEN CIRCUIT BETWEEN FUSE F-4 (15A) AND 3 [C-21] (OR FUSE F-5 (15A) AND 3 [C-32])

NO

REPLACE THE BULB

NO

REPLACE THE FUSE

1-3. HEADLIGHTS IN LOW-BEAM INOPERATIVE

- REMOVE THE CONNECTOR DIMMER•PASSING SW (COMBINATION SW)
- WITH THE SWITCH AT THE LOW-BEAM POSITION, IS THERE CONTINUITY BETWEEN THE SW CONNECTOR TERMINALS 13 [B-12] AND 16 [B-12]

YES

REPAIR A POOR CONNECTION AT THE CONNECTORS OR AN OPEN CIRCUIT BETWEEN 13 [B-12] AND 10 [H-8]

NO

REPAIR OR REPLACE THE DIMMER•PASSING SW

1-4. HEADLIGHTS IN HIGH-BEAM INOPERATIVE

- DISCONNECT THE CONNECTOR DIMMER•PASSING SW (COMBINATION SW)
- WHIT THE SWITCH AT HIGH-BEAM, IS THERE CONTINUITY BETWEEN THE SW CONNECTOR TERMINALS 15 [B-12] AND 16 [B-12] ?

YES

REPAIR A POOR CONNECTION AT THE CONNECTORS OR AN BROKEN WIRE BETWEEN 15 [B-12] AND 16 [H-8]

NO

REPAIR OR REPLACE THE DIMMER•PASSING SW

1-5. HEADLIGHT BEAM DOES NOT CHANGE

- DOES THE LEVER OF THE DIMMER•PASSING SW OPERATE SMOOTHLY AND SECURELY?

YES

- DISCONNECT THE CONNECTOR OF THE DIMMER PASSING SW.
- WITH THE SWITCH AT THE LOW-BEAM POSITION, IS THERE CONTINUITY BETWEEN 13 [B-12] AND 16 [B-12] ? ALSO, WITH IT AT THE HIGH-BEAM POSITION, IS THERE CONTINUITY BETWEEN 15 [B-12] AND 16 [B-12] ?

NO

REPAIR OR REPLACE THE DIMMER•PASSING SW

NO

REPAIR OR REPLACE THE DIMMER•PASSING SW

1-6. HEADLIGHTS REMAIN ON WHEN THE LIGHTING SW IS TURNED OFF

- IS THE LIGHTING RELAY NORMAL?

YES

- DISCONNECT THE CONNECTOR OF THE LIGHTING SW
- IS THE CONTINUITY BETWEEN THE SWITCH CONNECTOR TERMINALS 1 [B-12] AND 7 [B-12] NORMAL?

YES

REPAIR A SHORT CIRCUIT BETWEEN 5 [X-1] AND 1 [B-12]

NO

REPAIR OR REPLACE THE LIGHTING SW

NO

REPLACE THE LIGHTING RELAY

1-7. HEADLIGHT COME ON WITH THE LIGHTING SW AT THE PARKING LIGHT POSITION

REPAIR OR REPLACE THE LIGHTING SW

2-1. (WHILE THE HEADLIGHT IS ON IN LOW-BEAM) BOTH FOG LIGHTS ARE INOPERATIVE

- IS FUSE F-8 (15A) NORMAL?

NO → REPLACE THE FUSE

YES →

- IS THE FOG LIGHT RELAY NORMAL?

NO → REPLACE THE FOG LIGHT RELAY

YES →

- REMOVE THE FOG LIGHT SW
- WITH THE SWITCH ON, IS THERE CONTINUITY BETWEEN THE SW CONNECTOR TERMINALS 5 [I-5] AND 4 [I-5]?

NO → REPAIR OR REPLACE THE FOG LIGHT SW

YES →

- IS THE BATTERY VOLTAGE APPLIED BETWEEN THE FOG LIGHT SW HARNESS SIDE CONNECTOR 5 [I-5] AND THE GROUND?

NO → REPAIR A POOR CONNECTION AT THE CONNECTORS OR AN OPEN CIRCUIT BETWEEN FUSE F-4 (15A) AND 3 [X-23] OR 1 [X-23] AND 5 [I-5]

YES → REPAIR A POOR CONNECTION AT THE CONNECTORS OR AN OPEN CIRCUIT BETWEEN 4 [I-5] AND 16 [H-26]

2-2. (WHILE THE HEADLIGHT IS ON IN LOW-BEAM) FOG LIGHT ON THE LEFT (OR RIGHT) SIDE IS INOPERATIVE

- IS THE FOG LIGHT BULB NORMAL?

YES

REPAIR A POOR CONNECTION AT THE CONNECTORS OR A OPEN CIRCUIT BETWEEN 2 [C-24] AND 6 [C-16] (OR 2 [C-29] AND 6 [C-16])

NO

REPLACE THE BULB

NOTE: Connectors in parenthesis "( )" indicates the check point of the fog light-RH.

LIGHTING SWITCH (COMBINATION SWITCH)

The lighting switch has OFF, PARKING and HEADLIGHT positions. The Parking position is used to light up the front side marker light, parking light, taillight, license plate light, and each illumination light. When the headlight position, the headlight, in addition to all the lights mentioned above, is turned on through the lighting relay.

INSPECTION

Check the continuity between the connector terminals while operating the switch knob. (Fig. 8-81)
Replace the switch when the result of inspection is found abnormal.

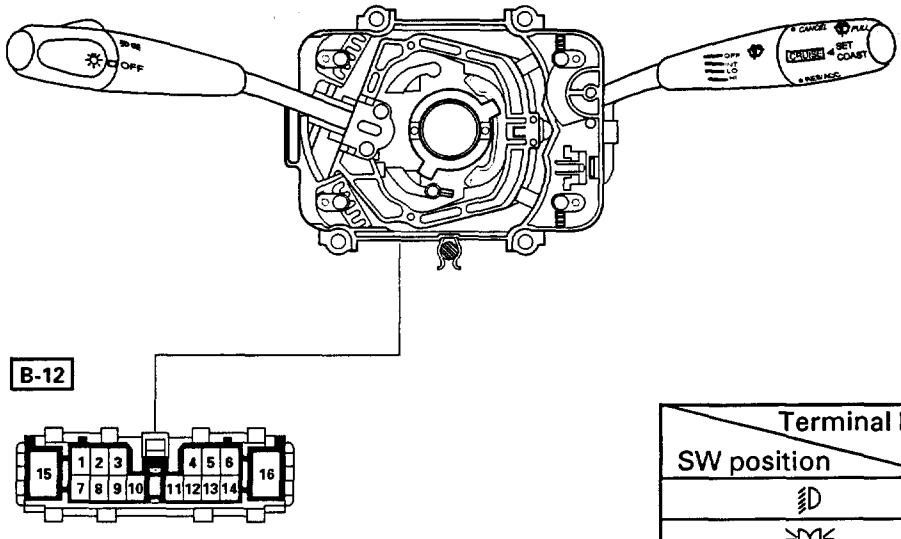

SW position \ Terminal No.	1	7	8
≣D	○—○—○		
≣DK		○—○	
OFF			

Fig. 8-81

REMOVAL (FIG. 8-82)

Preparation: Disconnect the battery ground cable.

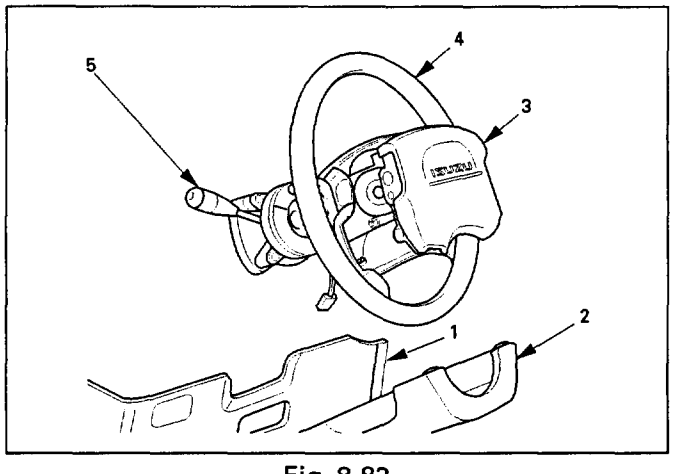

Fig. 8-82

1. **Instrument panel driver lower cover**
   - Refer to the removal steps of the STARTER SWITCH in this section.
2. **Steering cowl**
   - Remove seven screws.
3. **Driver inflator module**
   - Disconnect the inflator module connector located at lower of the instrument panel driver lower cover.
   - Remove four screws.
   - Disconnect the inflator module connector.

CAUTION:
When carrying a live inflator module, make sure the bag opening is pointed away from you. In case of an accidental deployment, the bag will then deploy with minimal chance of injury. Never carry the inflator module by the wires or connector on the underside of the module.

When placing a live inflator module on a bench or other surface, always face the bag and trim cover up, away from the surface. This is necessary so that a free space is provided to allow the air bag to expand in the unlikely event of accidental deployment.

4. **Steering wheel**
   - Refer to STEERING WHEEL REPLACEMENT in Section 3F4.
5. **Lighting switch (Combination switch)**
   - Disconnect the switch connector.
   - Remove four screws.
   - Remove the lighting switch together with SRS coil assembly.

CAUTION:
Do not remove SRS coil assembly from the combination switch assembly.

INSTALLATION

To install, follow the removal steps in the reverse order, noting the following points.

1. Check to see if the vehicle is in the straight driving condition and turn the rotary section of the SRS coil assembly provided to the upper surface of the lighting switch (combination switch) clockwise fully until it stops. Then from where it stops, turn it back about 3 rotations to set the alignment marks together before installing the steering wheel. (Fig. 8-83)

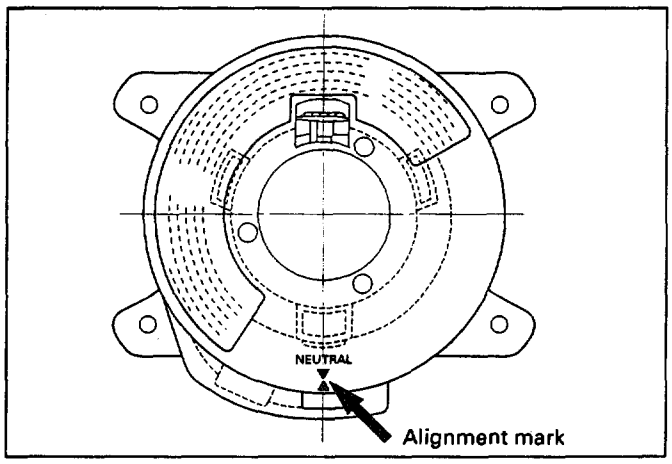

Fig. 8-83

2. Tighten the steering shaft nut to the specified torque.

Nut torque	N·m (lb·ft)	34 (25)

3. When connect the double lock type of inflator module connector, insert the connector completely and lock at outside. Imperfect locking may cause malfunction of SRS system circuit.
4. When installing the steering cowl, be sure to pass the harnesses through the route as shown in the illustration so that the starter switch, the combination switch and the inflator module harness will not get caught. (Fig. 8-84)

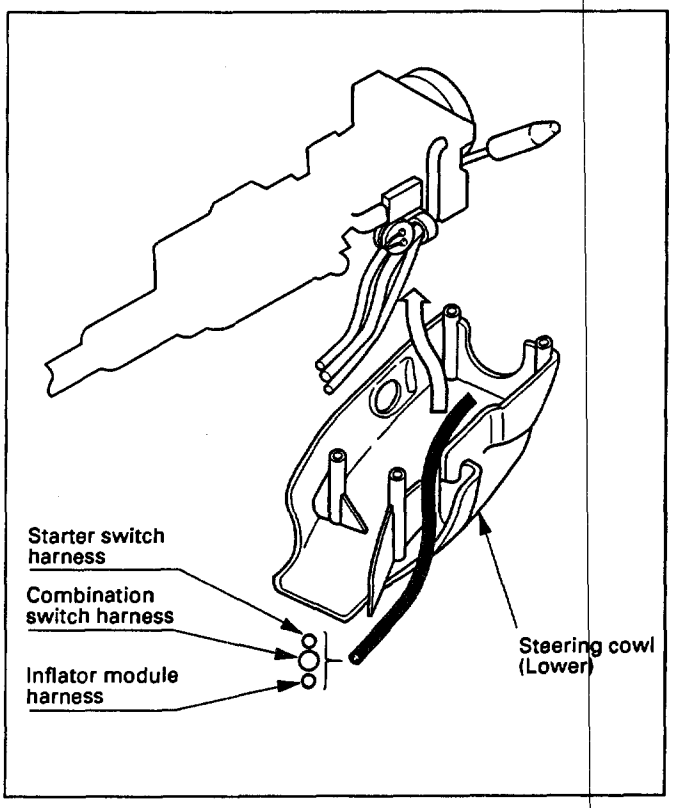

Fig. 8-84

DIMMER•PASSING SWITCH (COMBINATION SWITCH)

The headlight beams can be turned to high and low alternately by pulling the switch lever up to the limit. Also, the passing light can be flashed by operating the switch lever within the range before the dimmer switch has been changed over. The switch lever returns automatically to its original position.

INSPECTION

Check the continuity between the terminals of the dimmer passing switch. (Fig. 8-85)
Repair or replace the switch when the result of inspection is found abnormal.

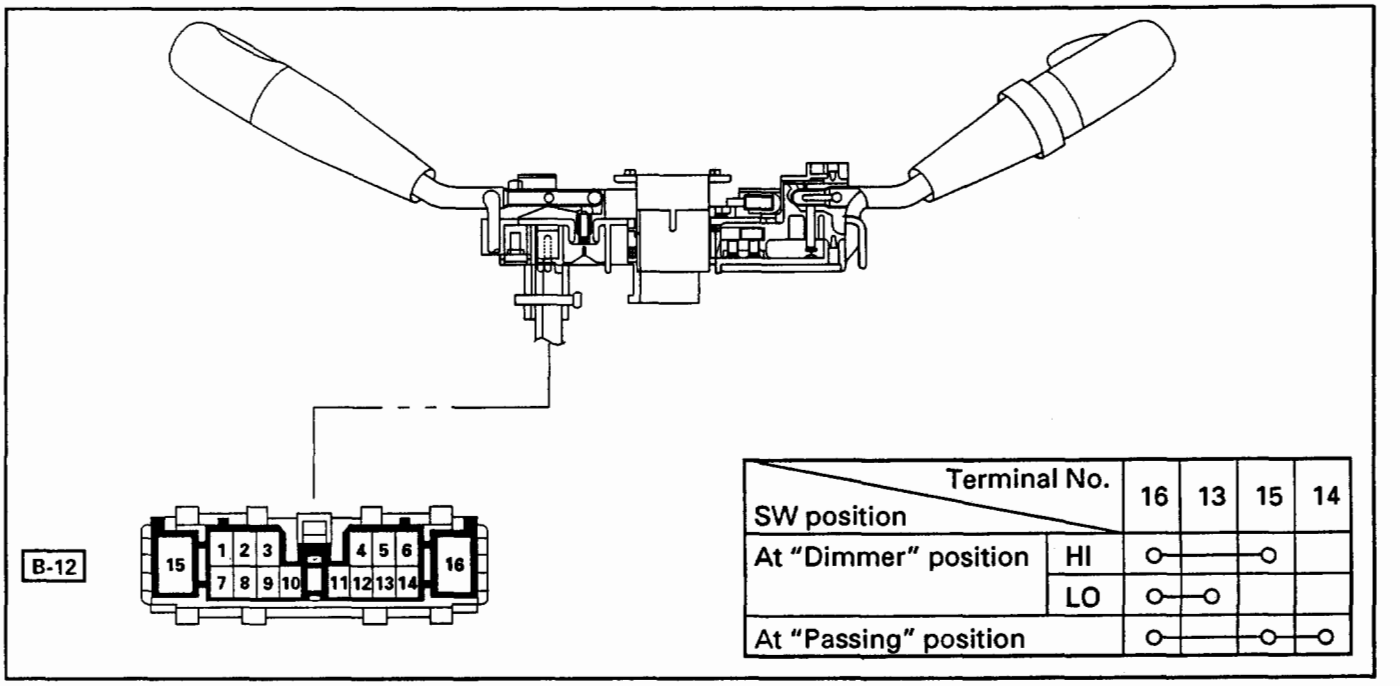

SW position \ Terminal No.		16	13	15	14
At "Dimmer" position	HI	○	—	○	
	LO	○	○		
At "Passing" position		○		○	○

Fig. 8-85

REMOVAL AND INSTALLATION

Refer to the removal and installation steps of the LIGHTING SWITCH (COMBINATION SWITCH) in this section.

HEADLIGHT BULB

The headlight bulb can be replaced with a halogen bulb.

REMOVAL (FIG. 8-86)

Preparation: Disconnect the battery ground cable.

1. **Headlight bulb**
   - Disconnect the connector.
   - Remove the cap while turning it counter clockwise.
   - Pull the bulb out from the headlight body.

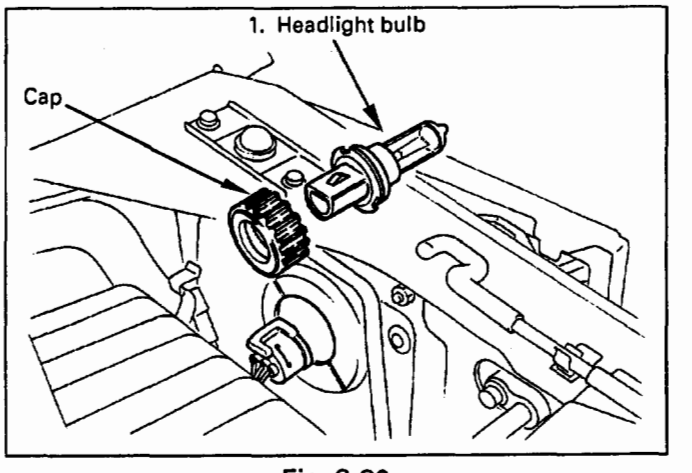

Fig. 8-86

CAUTION:
The halogen bulb develops a very high temperature. Do not touch the glass portion. If any stain is on the glass surface, it will scorch and the glass will be damaged.

INSTALLATION

To install, follow the removal steps in the reverse order.

HEADLIGHT

REMOVAL (FIG. 8-87)

Preparation: Disconnect the battery ground cable.

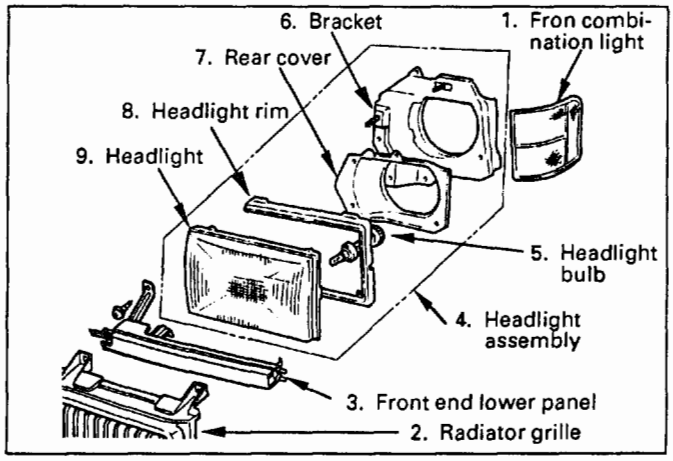

Fig. 8-87

1. **Front combination light**
   - Remove the screw and pull out the two projecting portions on the fender side.
2. **Radiator grille**
   - Remove the 5 clips and 2 screws.
3. **Front end lower panel**
   - Remove the two screws.
4. **Headlight assembly (with bracket)**
   - Remove the four bolts and two nuts.
5. **Headlight bulb**
   - Refer to the headlight bulb removal steps in this section.
6. **Bracket**
   - Remove the two screws and two nuts.
   - Remove the spring for the headlight aim adjustment.
7. **Rear cover**
   - Remove four screws.
8. **Headlight rim**
9. **Headlight**

INSTALLATION

To install, follow the removal steps in the reverse order.

CAUTION:
After installing the headlight, be sure to adjust the headlight aim.

AIMING OF HEADLIGHT

Preparation: Place the unloaded vehicle on a level surface and check to see if the inflation pressure of the tires is correct, the lenses are clean, and the battery is sufficiently charged. Adjust the aim with the headlight tester, if necessary. (Fig. 8-88)
When adjusting, follow the procedure of the tester manufacturer's.

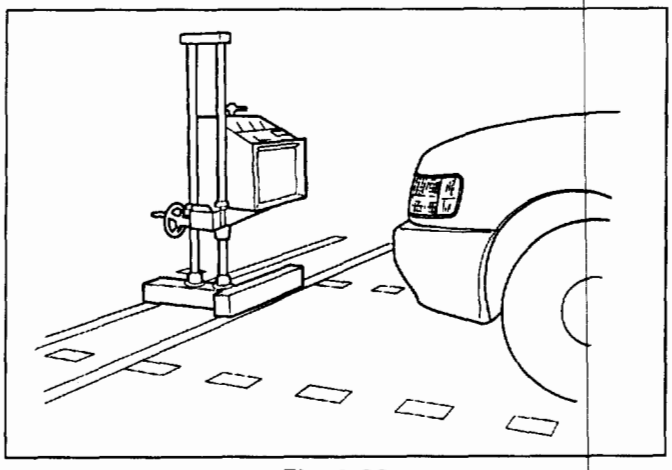

Fig. 8-88

Vertical adjustment

Use a screwdriver for vertical adjustment. (Fig. 8-89)

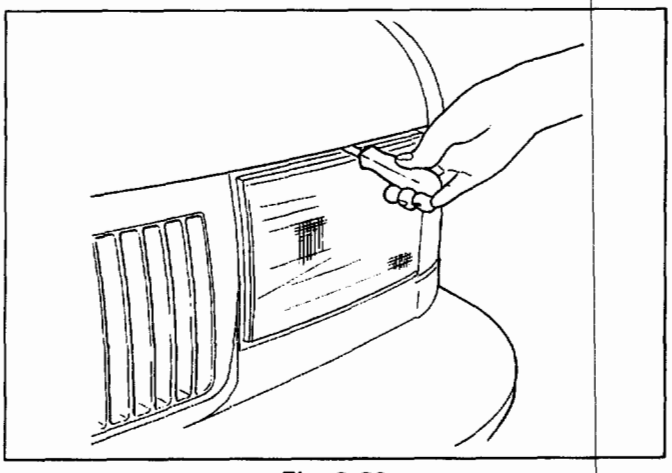

Fig. 8-89

Horizontal adjustment

Use a screwdriver for horizontal adjustment. (Fig. 8-90)

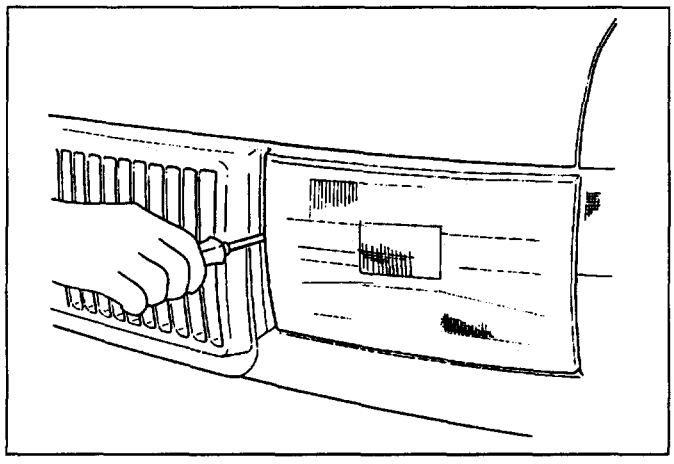

Fig. 8-90

FOG LIGHT BULB

REMOVAL (Fig. 8-91)

Preparation: Disconnect the battery ground cable.

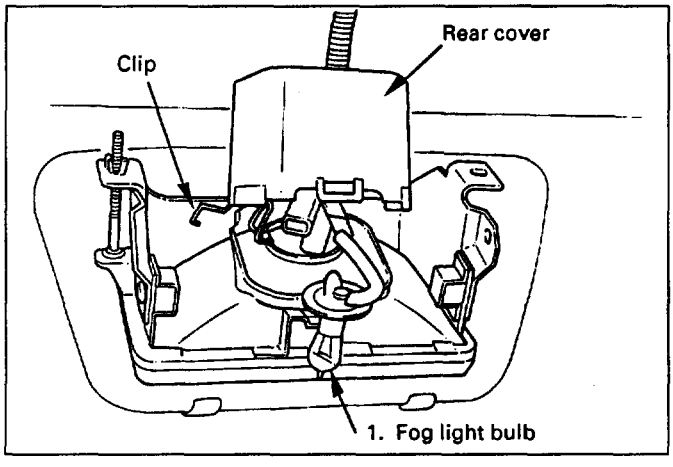

Fig. 8-91

1. **Fog light bulb**
   - Open the rear cover of the case.
   - Remove the dust cover.
   - Disconnect the bulb connector.
   - Remove the clip.

INSTALLATION

To install, follow the removal steps in the reverse order.

FOG LIGHT ASSEMBLY

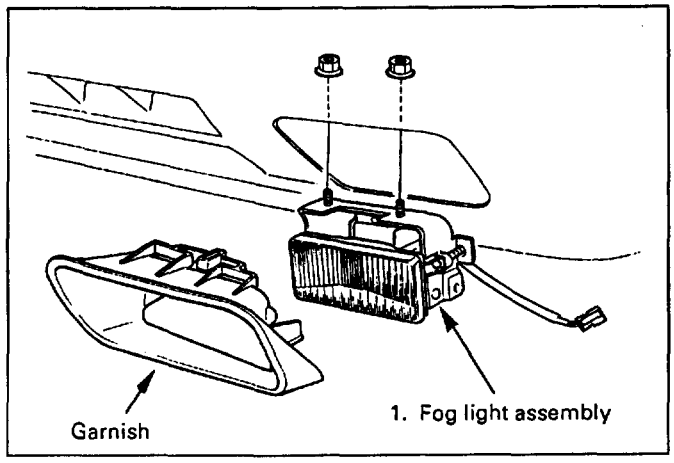

Fig. 8-92

REMOVAL (FIG. 8-92)

Preparation: Disconnect the battery ground cable.

1. **Fog light assembly**
   - Remove two nuts from the bracket.
   - Remove the 2 clips from the fog light garnish.
   - Disconnect the connector.
   - Remove the garnish mounting screw.

INSTALLATION

To install, follow the removal steps in the reverse order.

CAUTION:
After installing the fog light, be sure to adjust the fog light aim.

Vertical angle adjustment

Turn the adjusting screw with a screwdriver to adjust the aim of the fog light vertically. (Fig. 8-93)

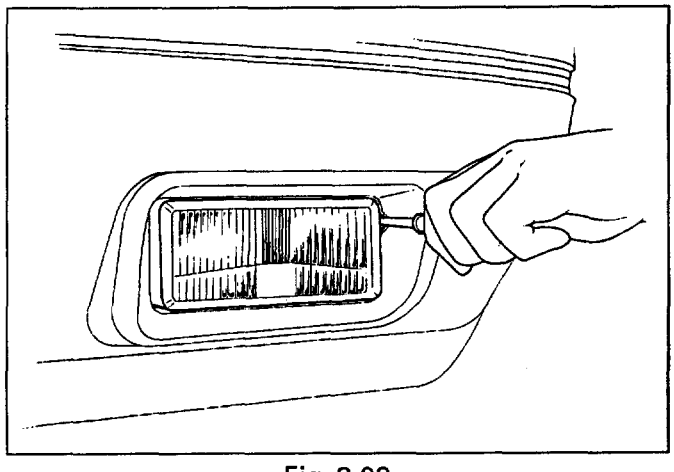

Fig. 8-93

FOG LIGHT SWITCH

INSPECTION

Check the continuity between the connector terminals while operating the switch. (Fig. 8-94)
Replace the switch when the result of inspection is found abnormal.

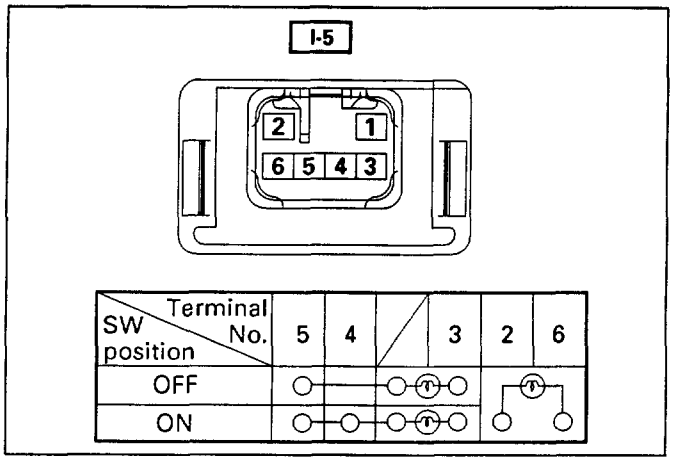

Fig. 8-94

REMOVAL (FIG. 8-95)

Preparation: Disconnect the battery ground cable.

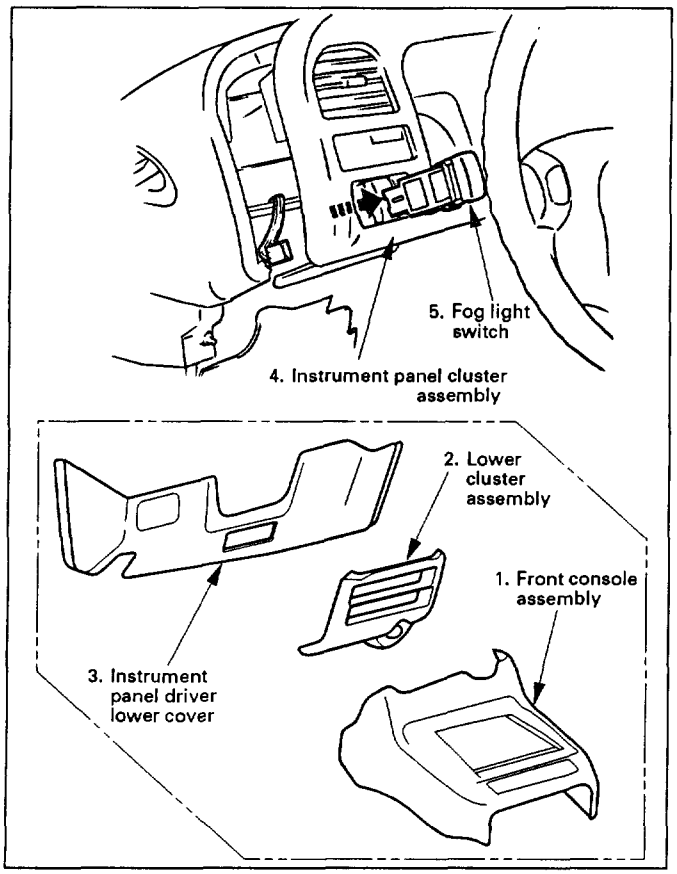

Fig. 8-95

1. **Front console assembly**
   - Remove four screws.
   - Remove the transmission shift lever knob (M/T only).
   - Remove the transfer shift lever knob.
   - Disconnect the seat heater switch connectors (If so equipped).
   - Disconnect the POWER & WINTER switch connectors (A/T only).
2. **Lower cluster assembly**
   - Remove three screws.
   - Disconnect the cigar lighter connectors.
   - Remove the cigar lighter illumination bulb socket.
   - Disconnect the ashtray illumination bulb connector.
3. **Instrument panel driver lower cover**
   - Remove the engine hood opener.
   - Remove three screws and clip.
   - Disconnect four fasteners.
4. **Instrument panel cluster assembly**
   - Remove five screws.
   - Disconnect the four clips at top of instrument panel cluster assembly.
5. **Fog light switch**
   - To remove the switch, pushing the lock from the back side of the cluster assembly.

INSTALLATION

To install, follow the removal steps in the reverse order, noting the following point:

1. Push in the switch with your fingers until the switch is locked securely.

LIGHTING RELAY

INSPECTION

Check to see if there is any continuity between the relay terminals. (Fig. 8-96)
Replace the relay when the result of inspection is found abnormal.

①–③	No continuity
(When the battery voltage is applied between ④–⑤)	
①–③	Continuity

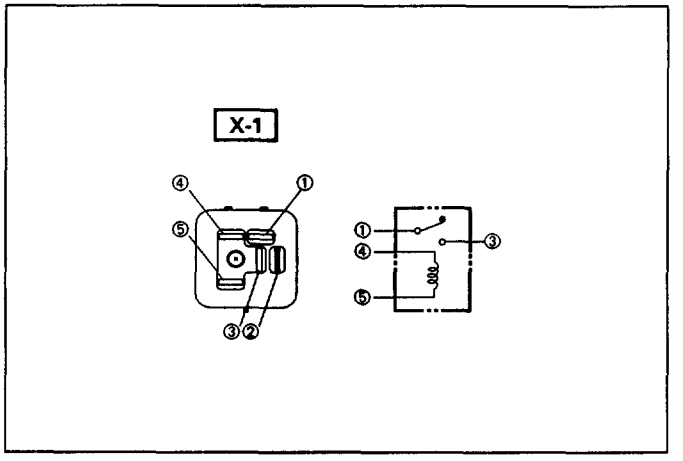

Fig. 8-96

FOG LIGHT RELAY, TAIL RELAY

INSPECTION

Check to see if there is any continuity between the relay terminals. (Fig. 8-97)
Replace the relay when the result of inspection is found abnormal.

② – ④	No continuity
(When the battery voltage is applied between ① – ③)	
② – ④	Continuity

NOTE:
For relay removal, refer to "Connector Handling" under the "NOTES FOR WORKING ON ELECTRICAL ITEMS" in this section.

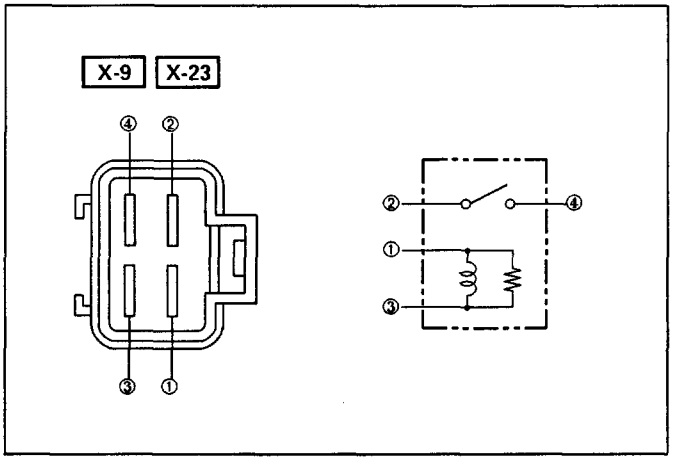

Fig. 8-97

FRONT SIDE MARKER LIGHT, PARKING LIGHT, TAILLIGHT, LICENSE PLATE LIGHT AND ILLUMINATION LIGHT

GENERAL DESCRIPTION

The circuit consists of the lighting switch, illumination controller, front side marker light, taillight, license plate light and the illumination light for each of switch, meter and ashtray.
All these lights come on when the lighting switch are turned on with the switch to either parking or headlight position.
The brightness of the illumination lights, except the ones for the ashtray and the glove box, can be adjusted by the illumination controller.

ILLUMINATION CIRCUIT

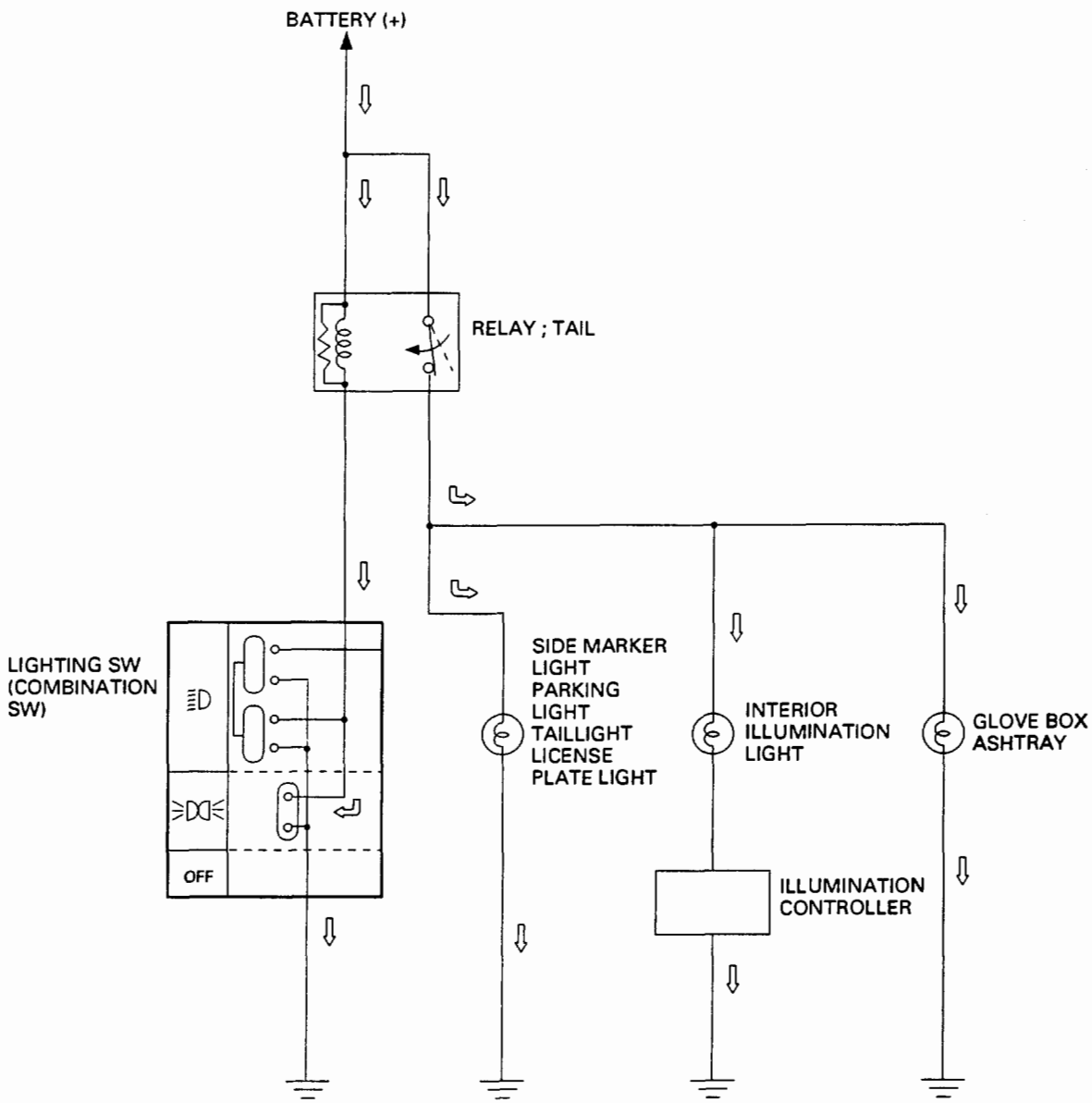

NOTE: Arrow marks " ⇨ " indicate the direction of current

Fig. 8-98

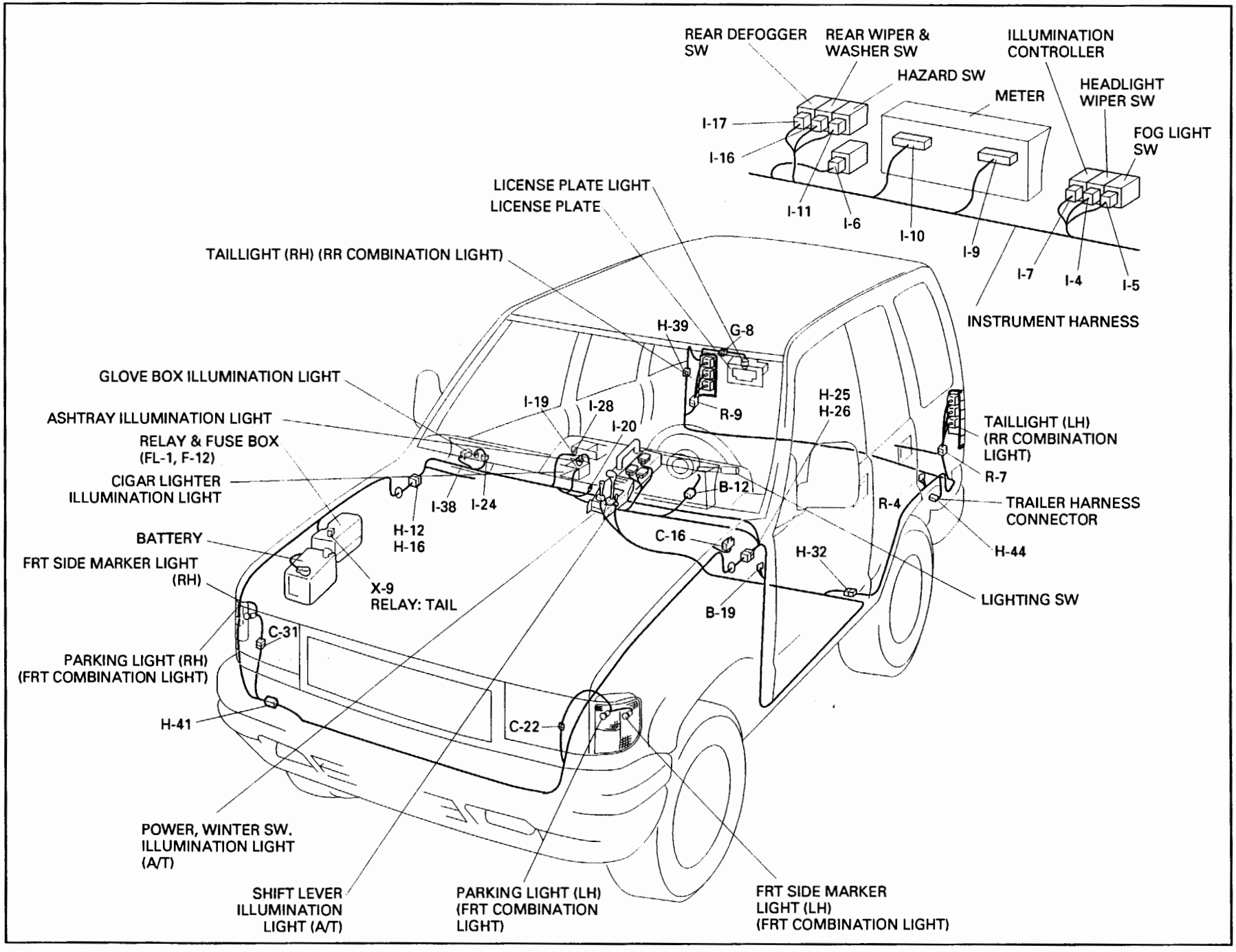
REAR DEFOGGER SW
REAR WIPER & WASHER SW
ILLUMINATION CONTROLLER
HAZARD SW
METER
HEADLIGHT WIPER SW
FOG LIGHT SW
I-17
I-16
I-11
I-6
I-10
I-9
I-7
I-4
I-5
INSTRUMENT HARNESS
LICENSE PLATE LIGHT
LICENSE PLATE
TAILLIGHT (RH) (RR COMBINATION LIGHT)
H-39
G-8
R-9
GLOVE BOX ILLUMINATION LIGHT
ASHTRAY ILLUMINATION LIGHT
RELAY & FUSE BOX (FL-1, F-12)
CIGAR LIGHTER ILLUMINATION LIGHT
I-19
I-28
I-20
H-25
H-26
TAILLIGHT (LH) (RR COMBINATION LIGHT)
R-7
B-12
R-4
TRAILER HARNESS CONNECTOR
I-38
I-24
H-12
H-16
BATTERY
C-16
H-44
FRT SIDE MARKER LIGHT (RH)
X-9
RELAY: TAIL
H-32
LIGHTING SW
B-19
C-31
PARKING LIGHT (RH) (FRT COMBINATION LIGHT)
H-41
C-22
POWER, WINTER SW. ILLUMINATION LIGHT (A/T)
SHIFT LEVER ILLUMINATION LIGHT (A/T)
PARKING LIGHT (LH) (FRT COMBINATION LIGHT)
FRT SIDE MARKER LIGHT (LH) (FRT COMBINATION LIGHT)

Fig. 8-99

CIRCUIT DIAGRAM

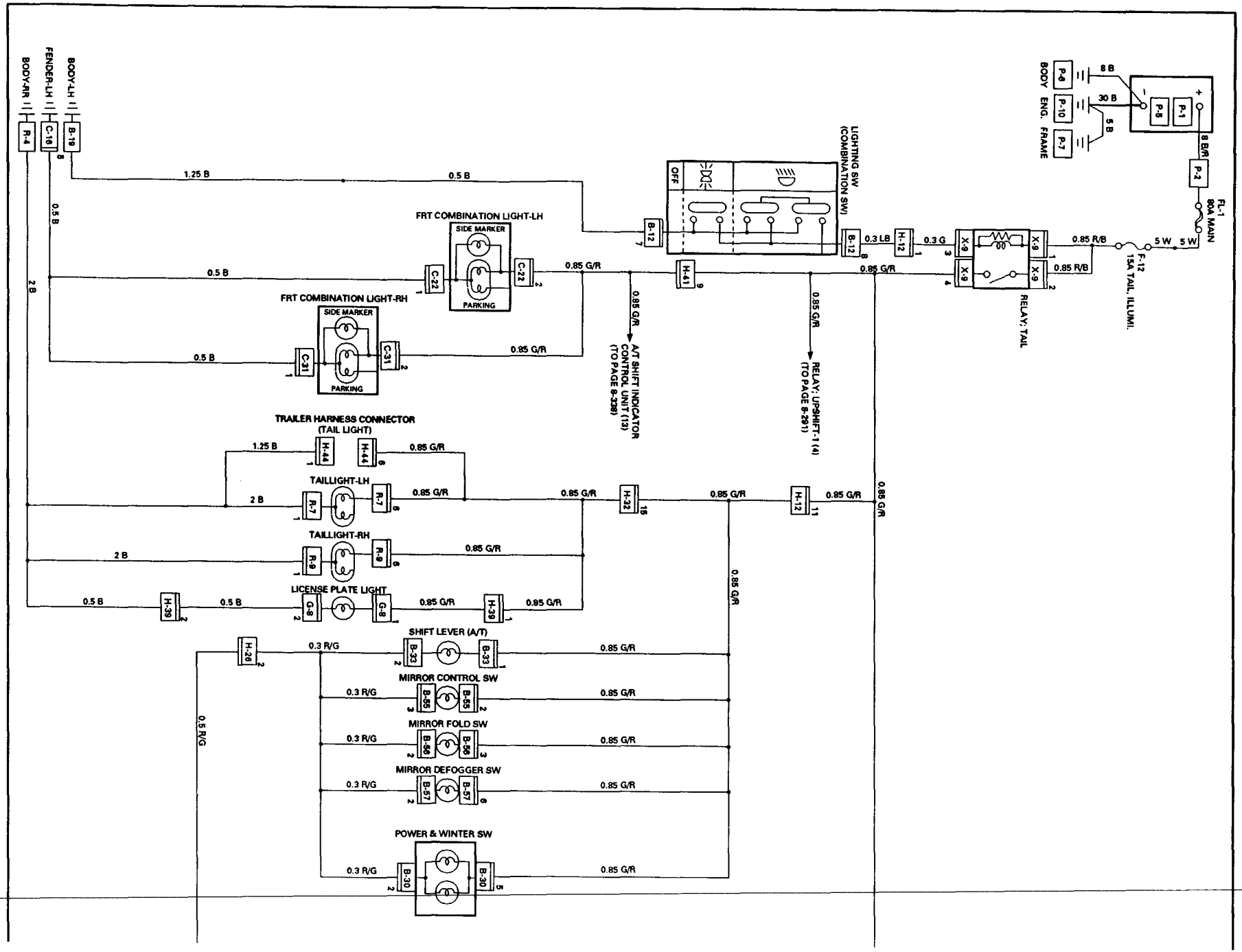

Fig. 8-100

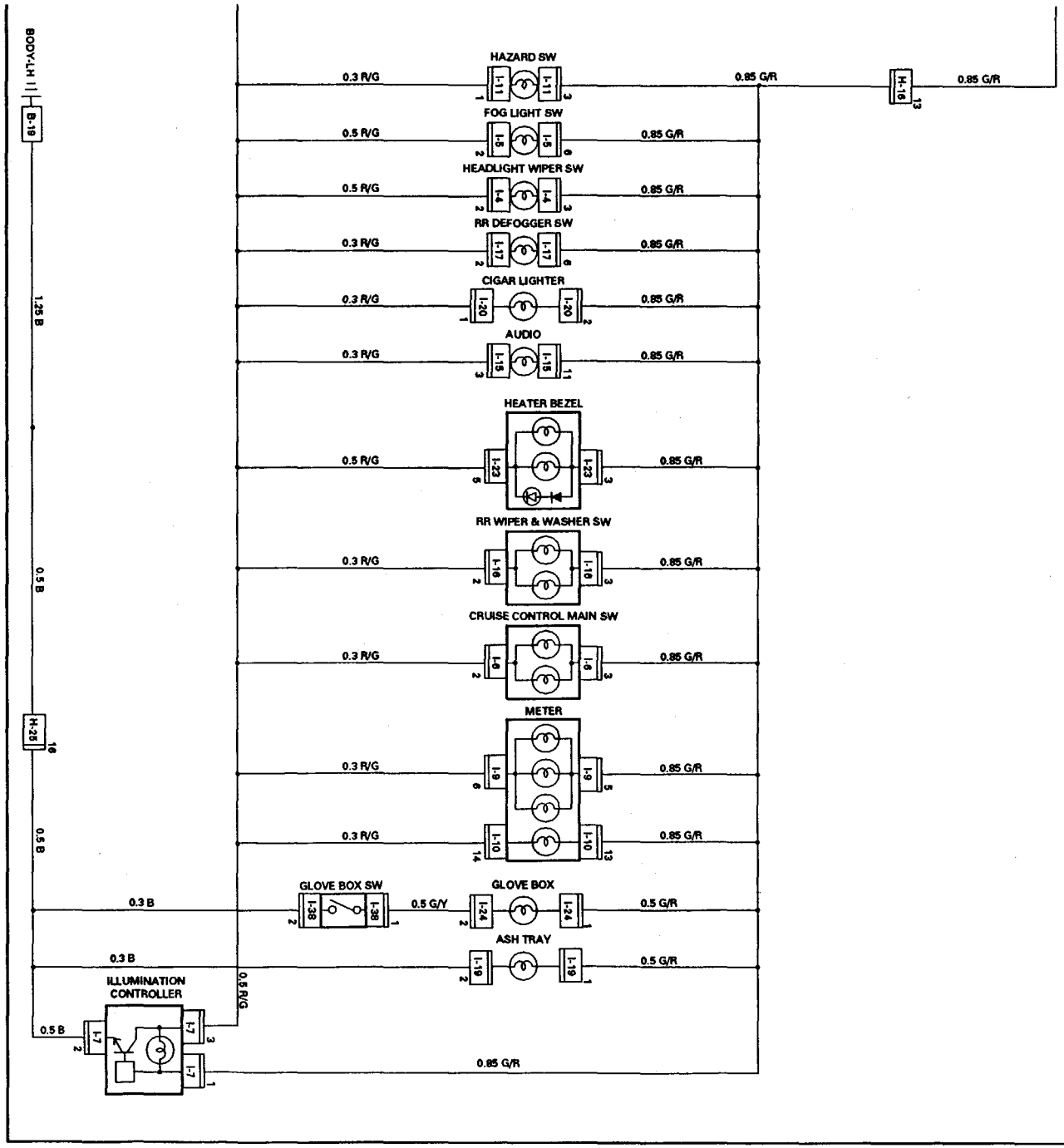
BODY-LH
B-19
1.25 B
0.5 B
H-25
16
0.5 B
HAZARD SW
0.3 R/G
0.85 G/R
H-16
13
0.85 G/R
FOG LIGHT SW
0.5 R/G
0.85 G/R
HEADLIGHT WIPER SW
0.5 R/G
0.85 G/R
RR DEFOGGER SW
0.3 R/G
0.85 G/R
CIGAR LIGHTER
0.3 R/G
0.85 G/R
AUDIO
0.3 R/G
0.85 G/R
HEATER BEZEL
0.5 R/G
0.85 G/R
RR WIPER & WASHER SW
0.3 R/G
0.85 G/R
CRUISE CONTROL MAIN SW
0.3 R/G
0.85 G/R
METER
0.3 R/G
0.85 G/R
0.3 R/G
0.85 G/R
GLOVE BOX SW
0.3 B
0.5 G/Y
GLOVE BOX
0.5 G/R
ASH TRAY
0.3 B
0.5 G/R
ILLUMINATION CONTROLLER
0.5 R/G
0.5 B
0.85 G/R

CONNECTOR LIST

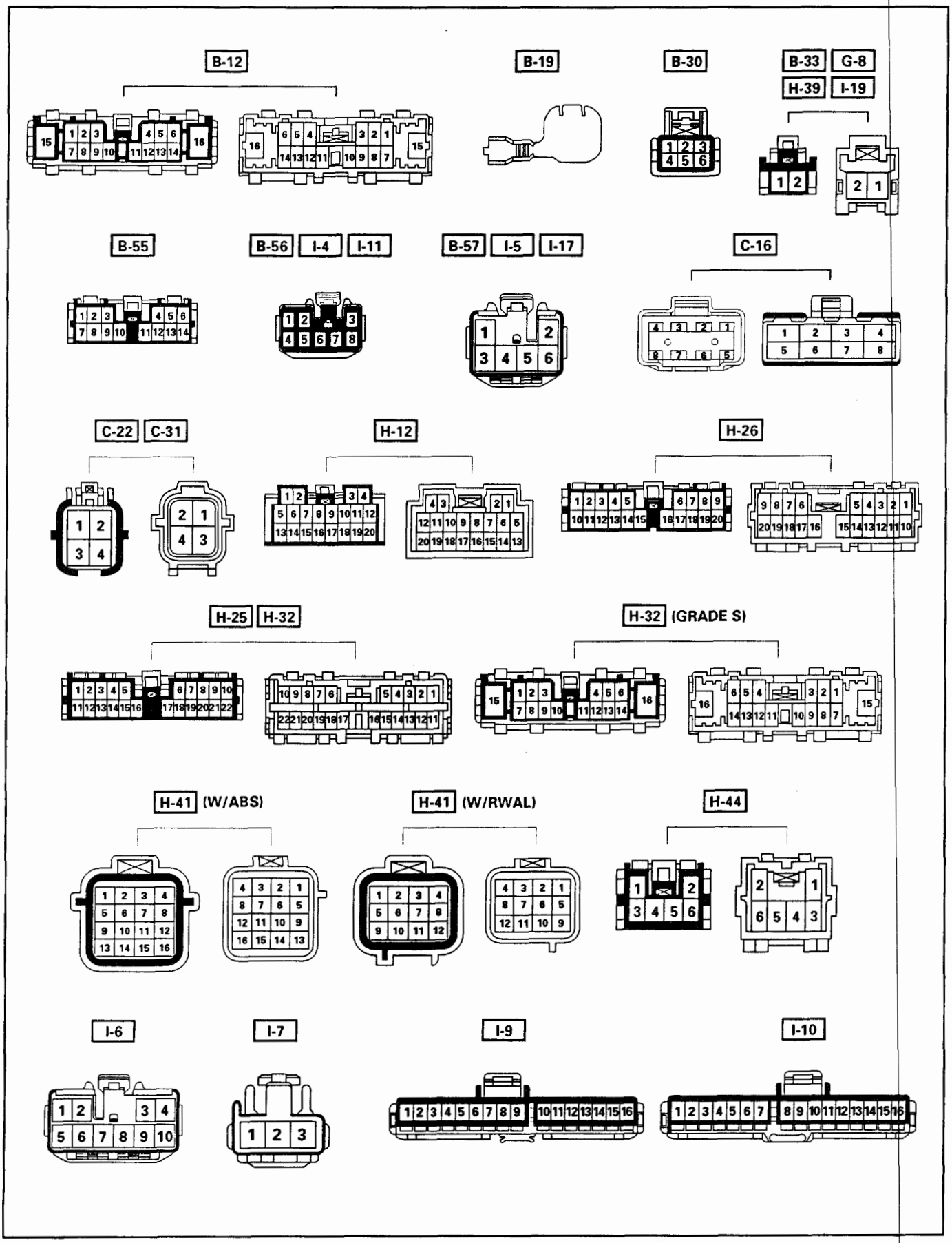

Fig. 8-101

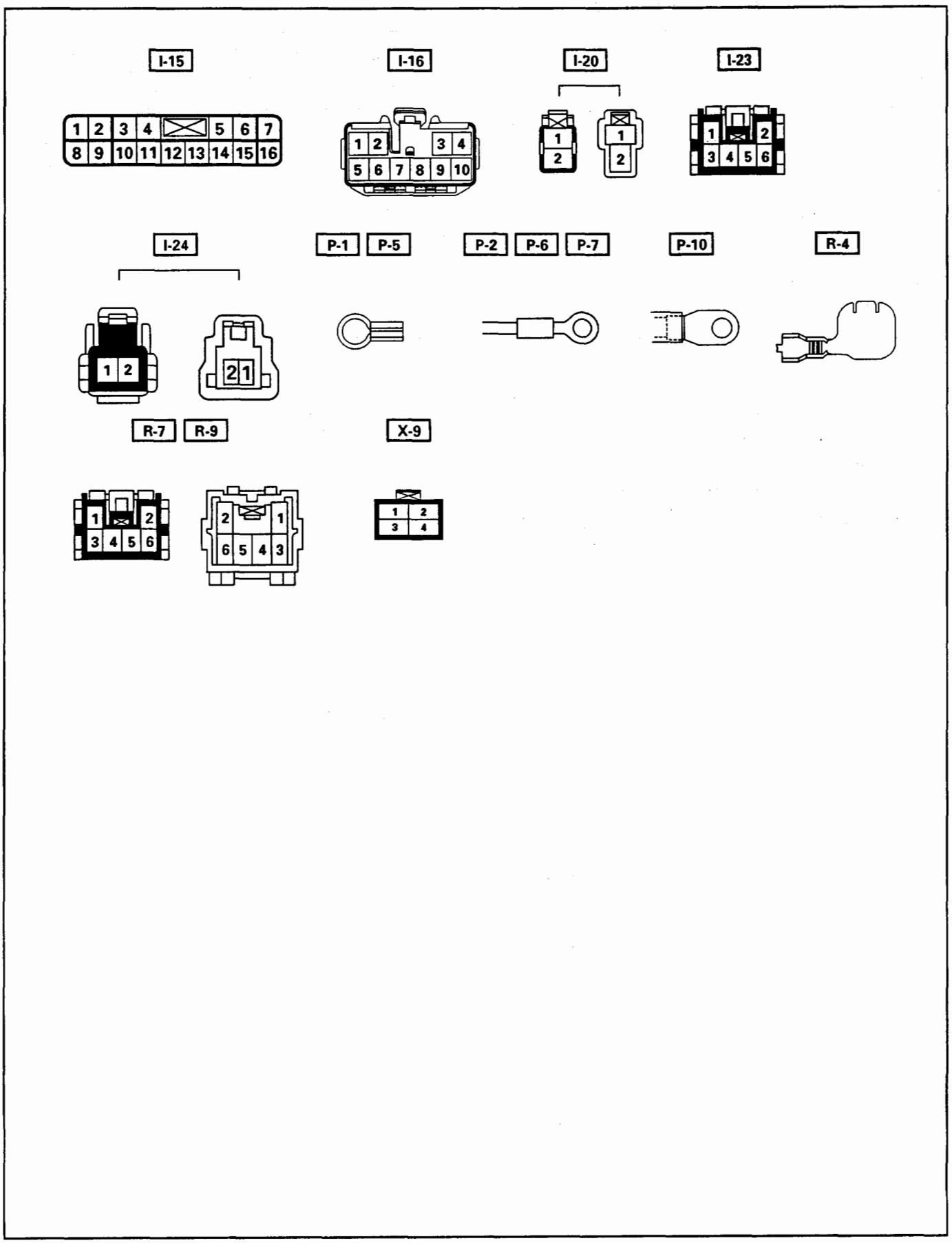
I-15
1 2 3 4 5 6 7
8 9 10 11 12 13 14 15 16
I-16
1 2 3 4
5 6 7 8 9 10
I-20
1
2
1
2
I-23
1 2
3 4 5 6
I-24
1 2
2 1
P-1
P-5
P-2
P-6
P-7
P-10
R-4
R-7
1 2
3 4 5 6
R-9
2 1
6 5 4 3
X-9
1 2
3 4

Fig. 8-102

DIAGNOSIS

QUICK CHART FOR CHECK POINT

Trouble mode \ Check point	Fuse F-12 (15A)	Tail Relay	Lighting SW	Taillight bulb	Front side marker light bulb	License plate light bulb	Cable harness
1. Both Taillights inoperative	○ (1)	○ (2)	○ (3)				○ (4)
2. Taillight on the left (or right) side inoperative				○ (1)			○ (2)
3. Both front side marker lights inoperative	○ (1)	○ (2)	○ (3)				○ (4)
4. Front side marker light on the left (or right) side inoperative					○ (1)		○ (2)
5. License plate light inoperative						○ (1)	○ (2)

NOTE: Figure in parenthesis "( )" indicates the order of inspection.

1. BOTH TAILLIGHTS INOPERATIVE

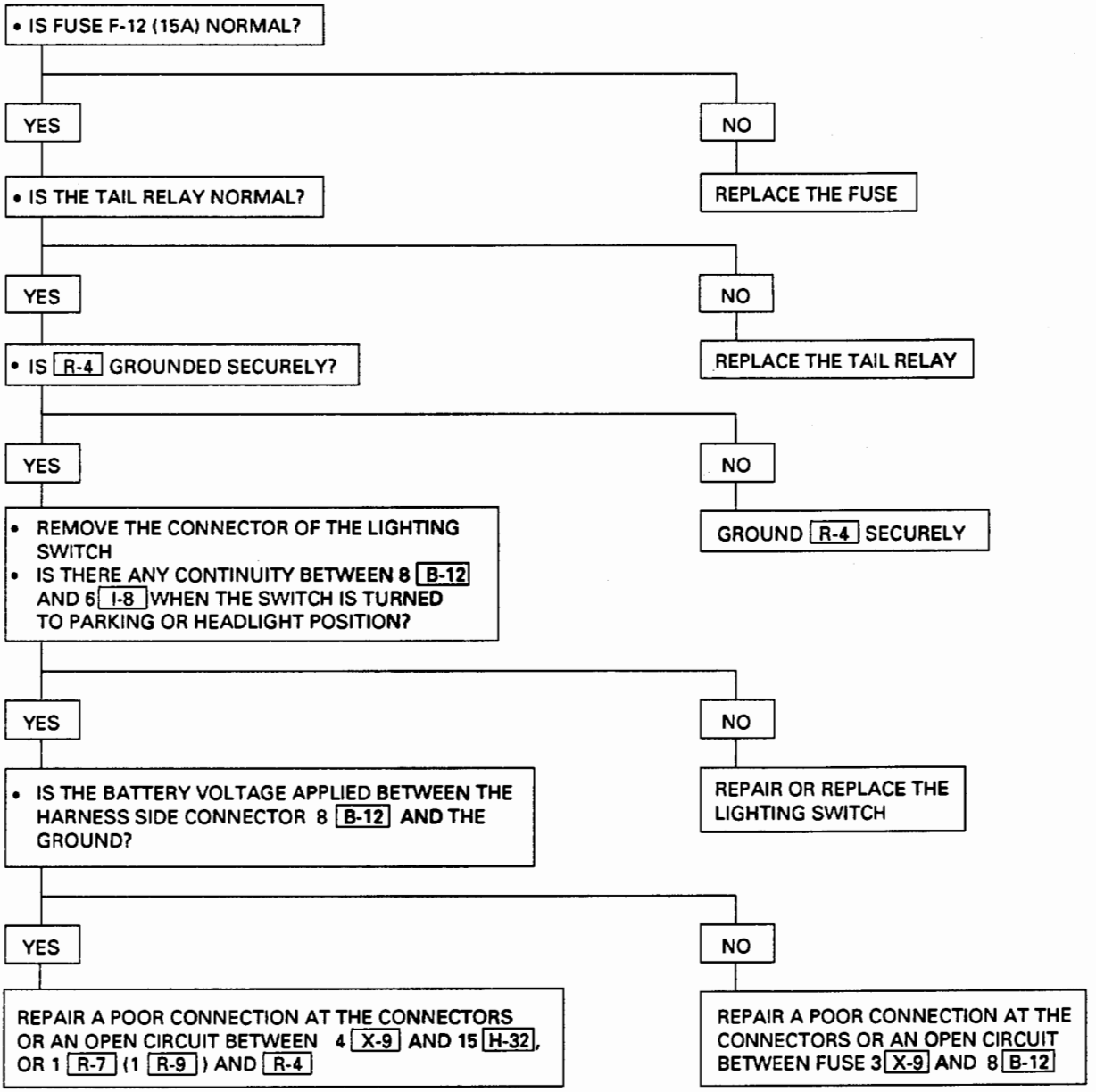

2. TAILLIGHT ON THE LEFT (OR RIGHT) SIDE INOPERATIVE

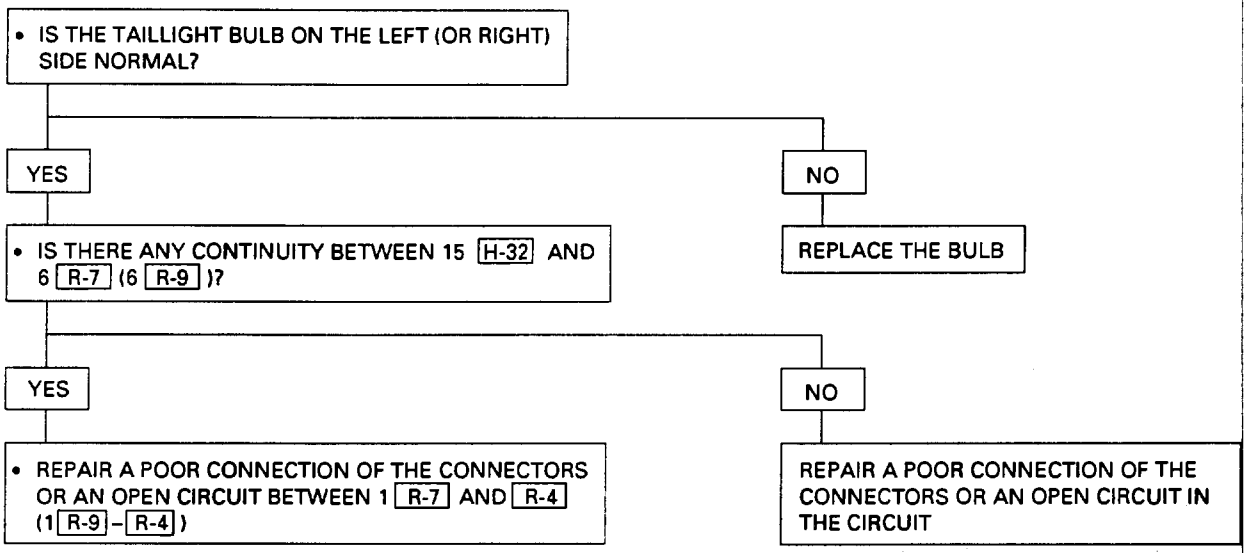

NOTE: Connector in parenthesis "( )" indicates the check point of taillight on the right side.

3. BOTH FRONT SIDE MARKER LIGHTS INOPERATIVE

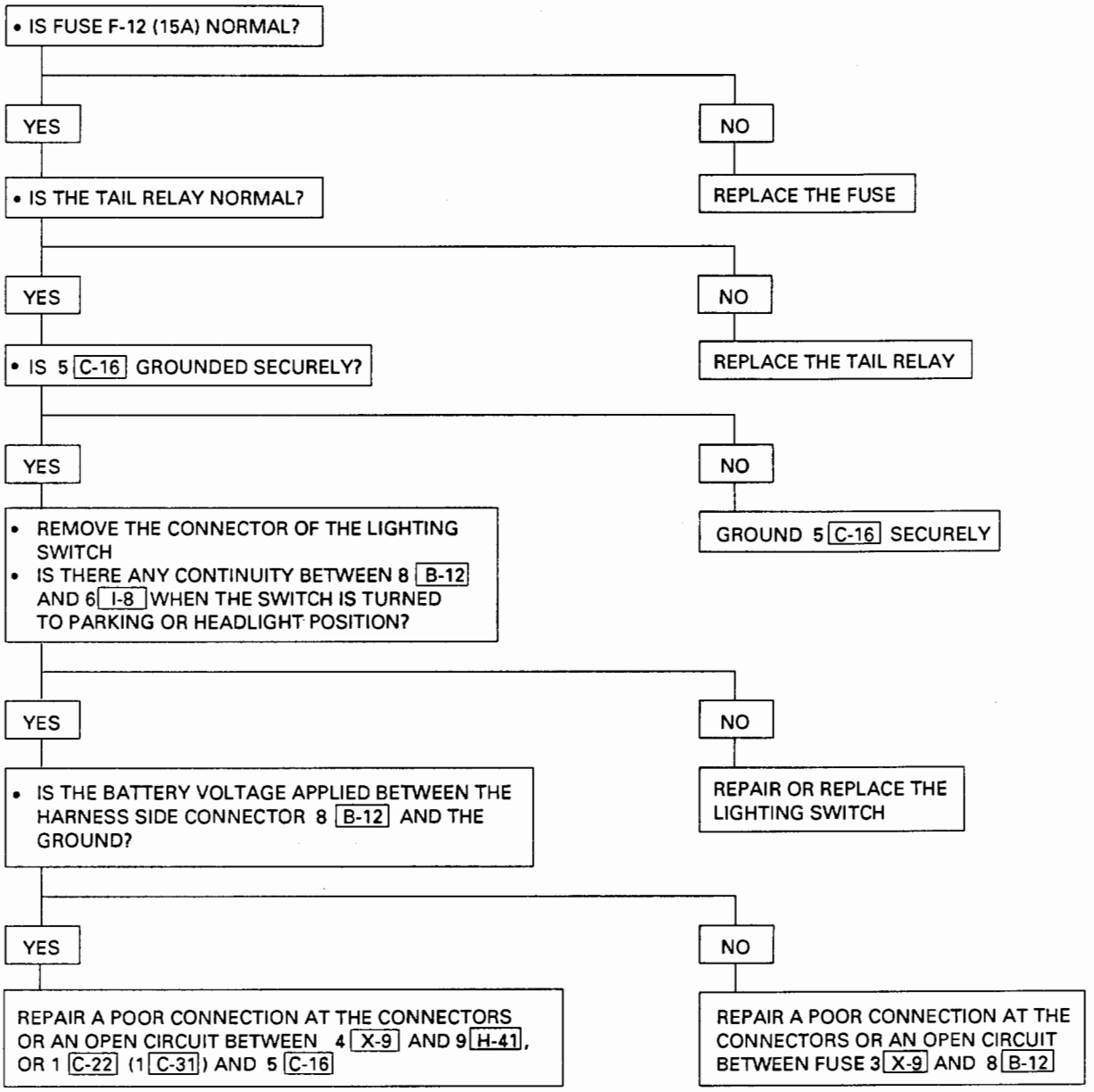

4. FRONT SIDE MARKER LIGHT ON THE LEFT (OR RIGHT) SIDE INOPERATIVE

- IS THE FRONT SIDE MARKER LIGHT BULB ON THE LEFT (OR RIGHT) SIDE NORMAL?
  - NO → REPLACE BULB
  - YES →
- IS THERE ANY CONTINUITY BETWEEN 9 [H-41] AND 2 [C-22] (2 [C-31])?
  - NO → REPAIR A POOR CONNECTION AT THE CONNECTORS OR AN OPEN CIRCUIT IN THE CIRCUIT
  - YES → REPAIR A POOR CONNECTION AT THE CONNECTORS OR AN OPEN CIRCUIT BETWEEN 1 [C-22] (1 [C-31]) AND 5 [C-16]

NOTE: Connector in parenthesis "( )" indicates the check point of the front side marker light on the right side.

5. LICENSE PLATE LIGHT INOPERATIVE

- IS THE TAILLIGHT NORMAL?
  - NO → REPAIR THE TAILLIGHT (REFER TO DIAGNOSIS "BOTH TAILLIGHTS INOPERATIVE" IN THIS SECTION)
  - YES →
- IS THE LICENSE PLATE LIGHT BULB NORMAL?
  - NO → REPLACE THE BULB
  - YES →
- IS [R-4] GROUNDED SECURELY?
  - NO → GROUND IT SECURELY
  - YES →
- IS THE BATTERY VOLTAGE APPLIED BETWEEN 1 [G-8] AND THE GROUND ?
  - NO → REPAIR A POOR CONNECTION AT THE CONNECTORS OR AN OPEN CIRCUIT IN THE CIRCUIT
  - YES → REPAIR A POOR CONNECTION AT THE CONNECTORS OR AN OPEN CIRCUIT BETWEEN 2 [G-8] AND [R-4]

LIGHTING SWITCH

Refer to "HEADLIGHT AND FOG LIGHT" in this section.

ILLUMINATION CONTROLLER

Turning the illumination controller knob upward increases the brightness of each illumination light, turning it downward decreases its brightness. The knob is installed on the ground circuit of the illumination lights, turning it changes the resistance of the controller. (Fig. 8-103)

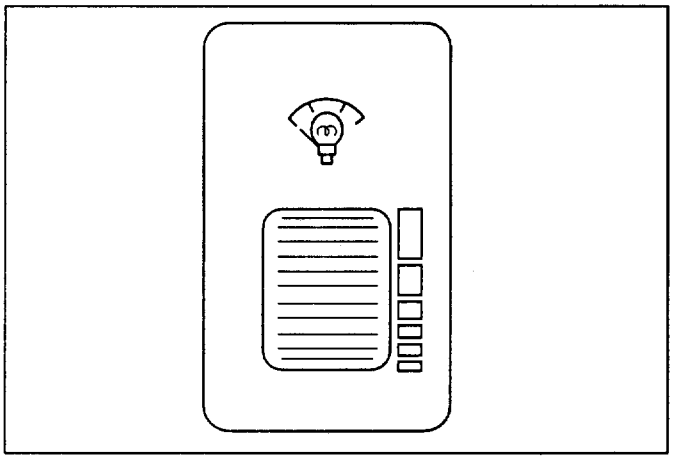

Fig. 8-103

INSPECTION (FIG. 8-104)

Check the illumination controller function (Fig. 8-104) Replace the illumination controller when the result of inspection is found abnormal.

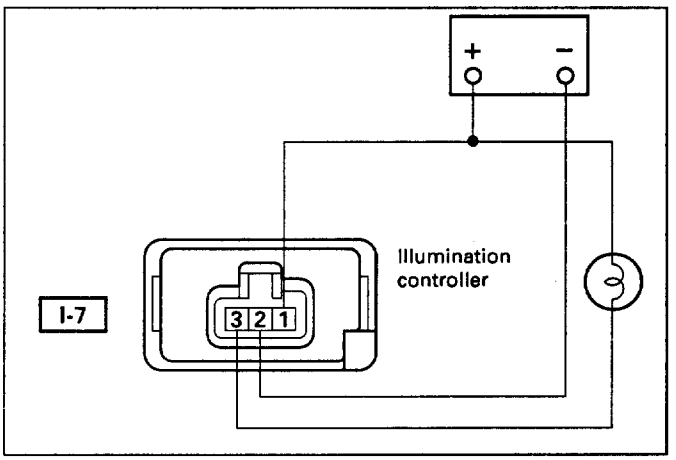

Fig. 8-104

REMOVAL (FIG. 8-105)

Preparation: Disconnect the battery ground cable.

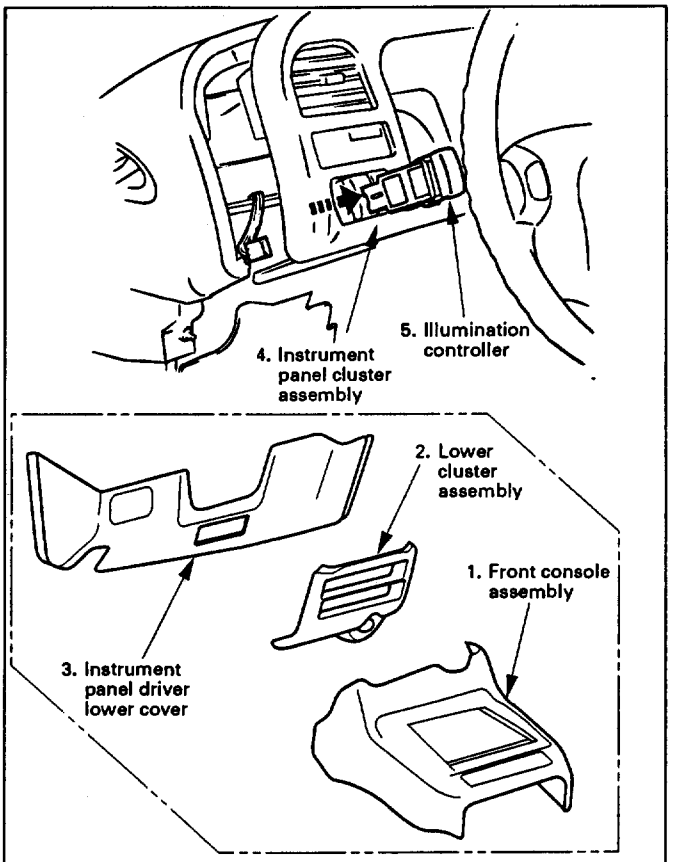

This illustration is based on fog light SW removal.

Fig. 8-105

1. **Front console assembly**
2. **Lower cluster assembly**
3. **Instrument panel driver lower cover**
4. **Instrument panel cluster assembly**
   - Refer to FOG LIGHT SWITCH removal steps in this section.
5. **Illumination controller**
   - To remove the controller, pushing the lock from the back side of the cluster assembly.

INSTALLATION

To install, follow the removal steps in the reverse order, noting the following point.

1. Push in the switch with your fingers until the switch is locked securely.

FRONT SIDE MARKER LIGHT BULB

REMOVAL (FIG. 8-106)

Preparation: Disconnect the battery ground cable.

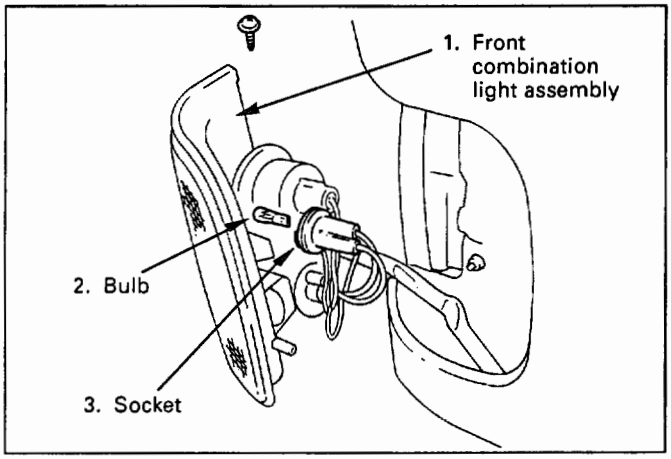

Fig. 8-106

1. **Front combination light assembly**
   - Remove the screw on the upper side of the light bracket, and then remove the connectors from the bracket and fender.
2. **Bulb**
   - Turn the socket of the front side marker light bulb by counterclockwise.
   - Pull out the bulb from the socket.

INSTALLATION

To install, follow the removal steps in the reverse order.

TAILLIGHT BULB

REMOVAL (FIG. 8-107)

Preparation: Disconnect the battery ground cable.

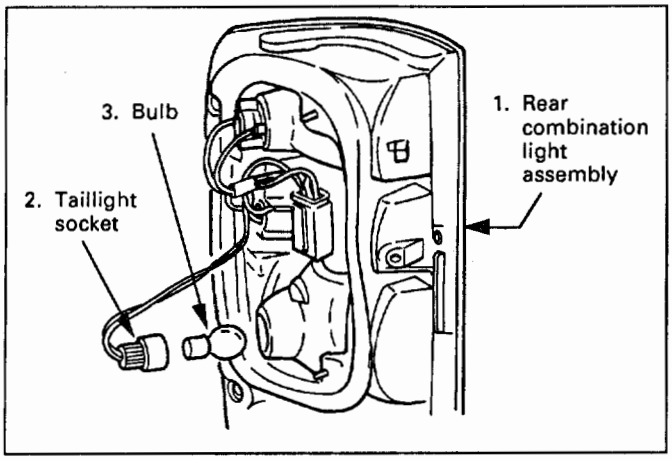

Fig. 8-107

1. **Rear combination light assembly**
   - Remove three screws and release locks at two locations.
2. **Taillight socket**
   - Remove the socket by turning it counterclockwise.
3. **Bulb**
   - Turn the bulb counter-clockwise while pushing it to remove it from the socket.

INSTALLATION

To install, follow the removal steps in the reverse order.

LICENSE PLATE LIGHT BULB

REMOVAL (FIG. 8-108)

Preparation: Disconnect the battery ground cable .

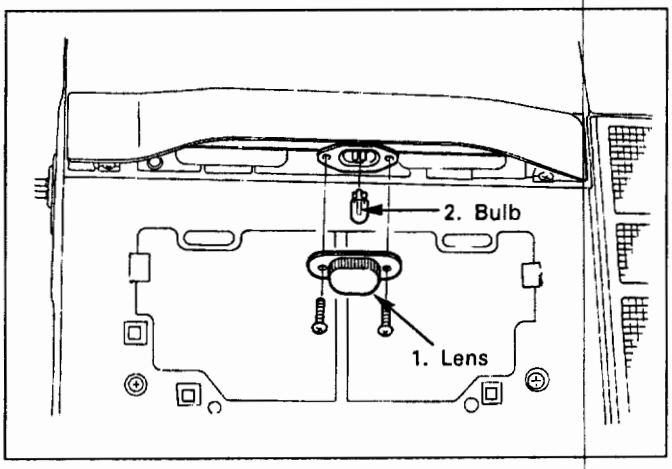

Fig. 8-108

1. **Lens**
   - Remove two screws.
2. **Bulb**
   - Pull out the bulb from the socket.

INSTALLATION

To install, follow the removal steps in the reverse order.

CIGARETTE LIGHTER ILLUMINATION BULB

REMOVAL (FIG. 8-109)

Preparation: Disconnect the battery ground cable .

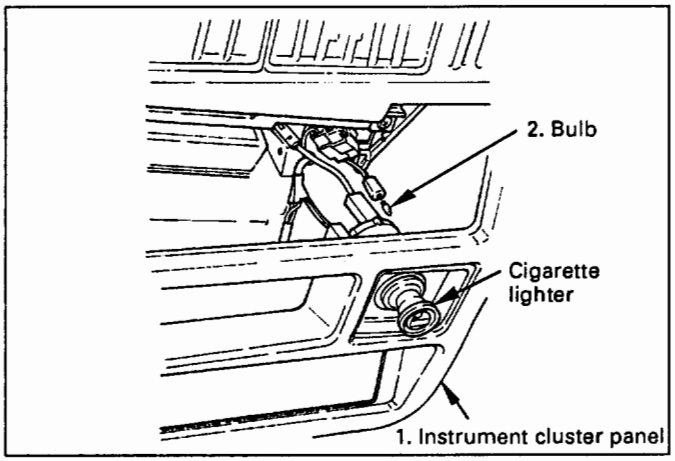

Fig. 8-109

1. **Instrument cluster panel**
   - Remove eight screws.
2. **Bulb**
   - Turn the socket counterclockwise to remove it, then pull out the bulb.

INSTALLATION

To install, follow the removal steps in the reverse order.

ASHTRAY ILLUMINATION BULB

REMOVAL (FIG. 8-110)

Preparation: Disconnect the battery ground cable .

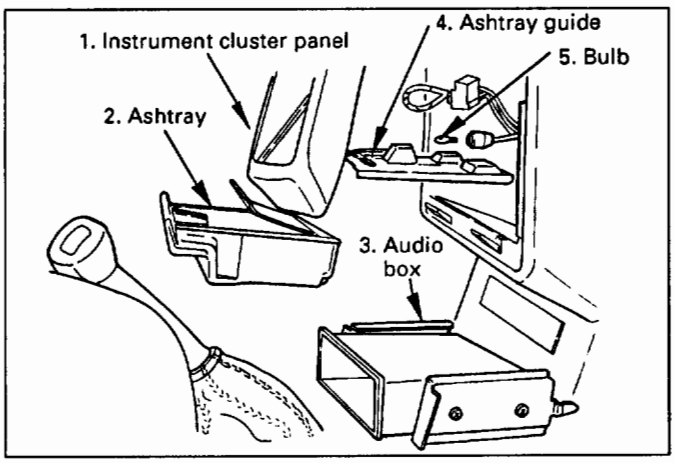

Fig. 8-110

1. **Instrument cluster panel**
   - Remove eight screws.
2. **Ashtray**
3. **Audio box**
   - Remove four screws.
4. **Ashtray guide**
   - Remove two screws.
5. **Bulb**
   - Turn the socket counterclockwise to remove it then pull out the bulb.

INSTALLATION

To install, follow the removal steps in the reverse order.

GLOVE BOX ILLUMINATION BULB

REMOVAL (FIG. 8-111)

Preparation: Disconnect the battery ground cable .

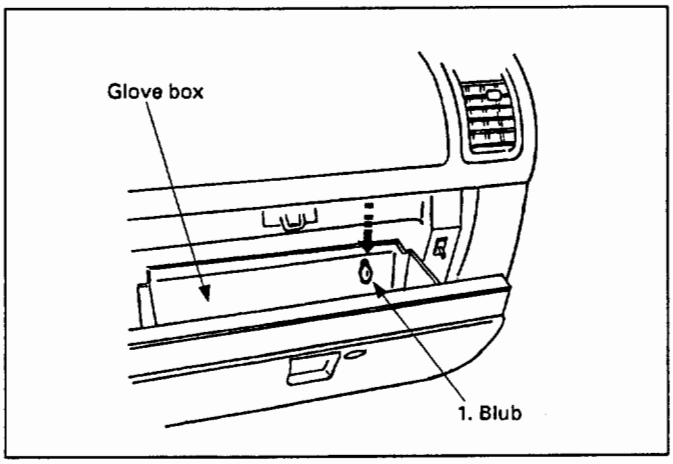

Fig. 8-111

1. **Bulb**
   - Open the glove box lid.
   - Pull out the bulb.

INSTALLATION

To install, follow the removal steps in the reverse order.

GLOVE BOX ILLUMINATION SWITCH

INSPECTION

Check the continuity between the connector terminals while operating the switch push rod. (Fig. 8-112)
Replace the switch when the result of inspection is found abnormal.

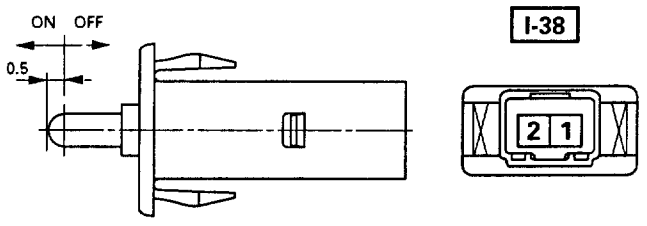

SW position \ Terminal No.	1	2
Glove box lid open (Push rod out)	○	○
Glove box lid close (Push rod in)		

Fig. 112

REMOVAL (FIG. 8-113)

Preparation: Disconnect the battery ground cable .

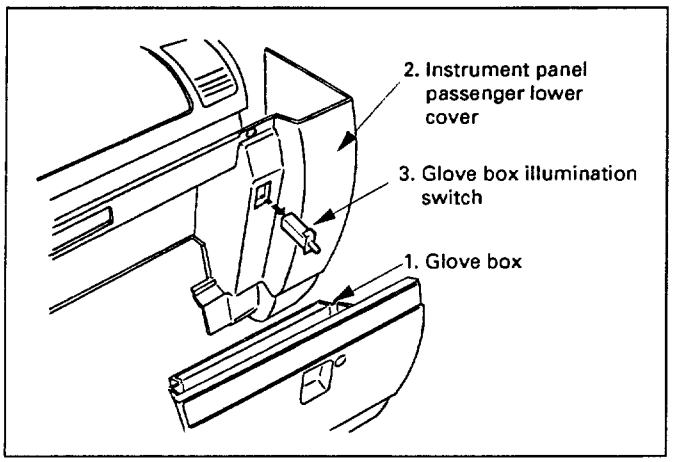

Fig. 8-113

1. **Glove box**
   - Remove two screws.
2. **Instrument panel passenger lower cover**
   - Refer to INSTRUMENT PANEL PASSENGER LOWER COVER in section 10 BODY.
3. **Glove box illumination switch**
   - To remove the switch, pushing the lock from the back side of the lower cover.

INSTALLATION

To install, follow the removal steps in the reverse order.

TAIL RELAY

INSPECTION

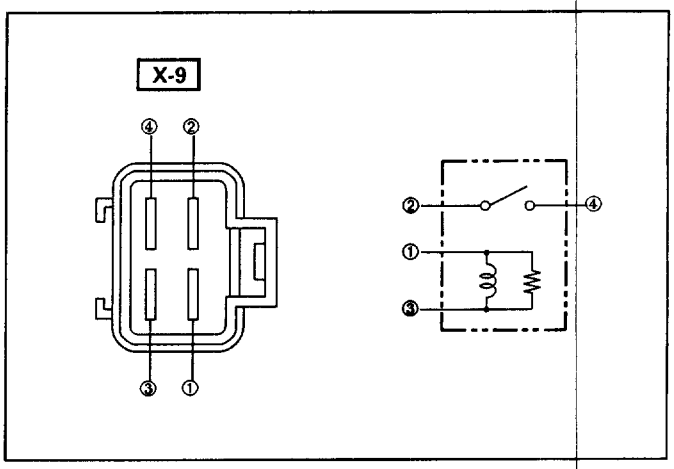

Fig. 8-114

Check to see if there is any continuity between the relay terminals. (Fig. 8-114)
Replace the relay when the result of inspection is found abnormal.

② – ④	No continuity
(When the battery voltage is applied between ① – ③)	
② – ④	Continuity

NOTE:
For relay removal, refer to "Connector Handling" under the "NOTES FOR WORKING ON ELECTRICAL ITEMS" in this section.

MEMO

STOPLIGHT AND REAR DEFOGGER

GENERAL DESCRIPTION

The circuit consists of the stoplight, stoplight switch (vehicles w/o cruise control), brake switch (vehicles w/ cruise control), rear defogger, rear defogger switch, rear defogger relay and trailer harness connector for stoplights.

With the brake pedal depressed, the stoplight switch or the brake switch is turned on to illuminate the stoplight. The brake switch controls not only the operation of the stoplight but also the input of the cruise cancel signals to the cruise control unit.

When the rear defogger switch is turned on with the starter switch on, the battery voltage is applied to the rear defogger through the rear defogger relay to operate the rear defogger.

The rear defogger switch is provided with a timer. When the operation time of the timer elapses which has been set in advance at manufacture, the switch is automatically turned off. (The timer operating time is normally about 30 minutes).

OPERATION OF THE REAR DEFOGGER CIRCUIT

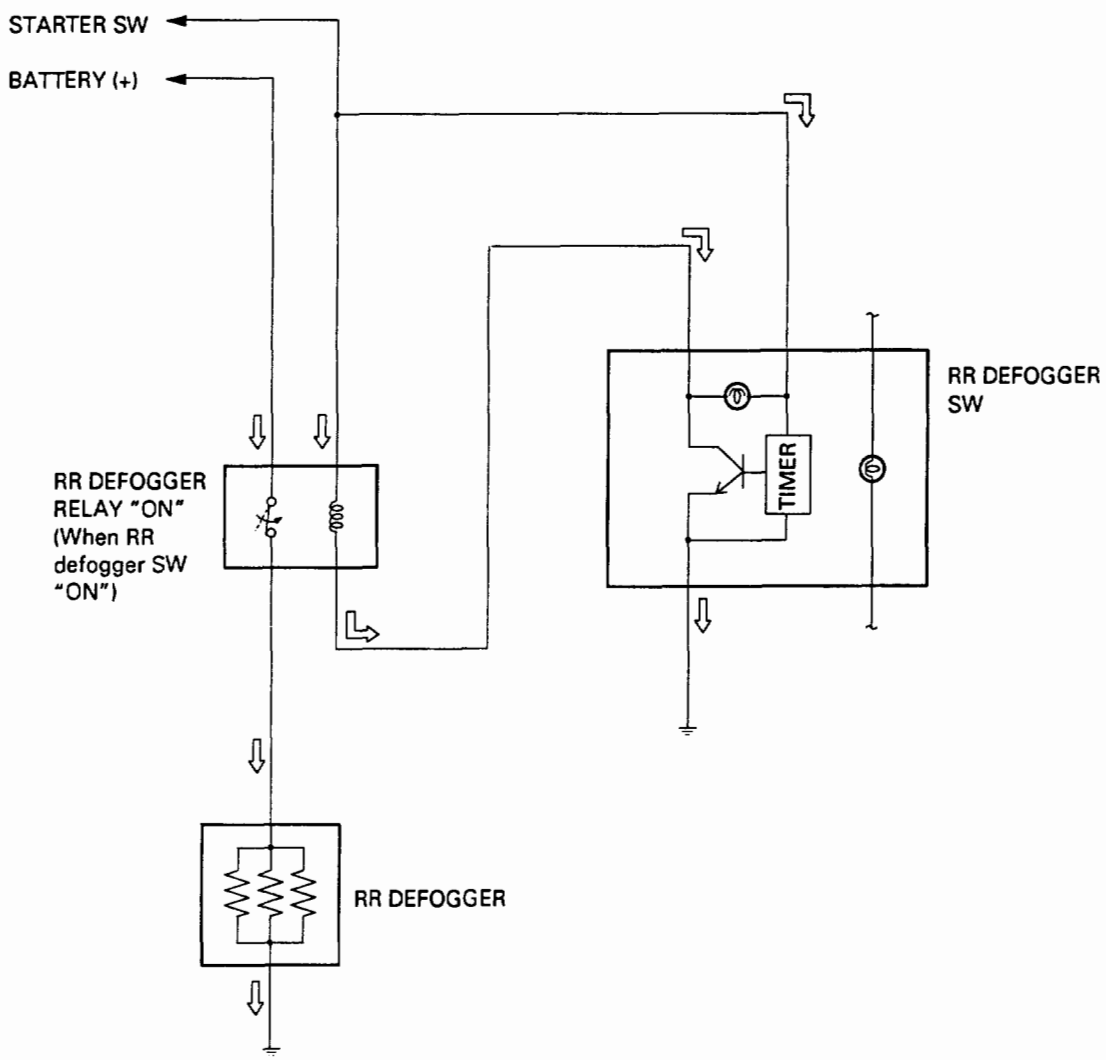

NOTE: Arrow marks " ⇨ " indicate the direction of current

Fig. 8-115

PARTS LOCATION

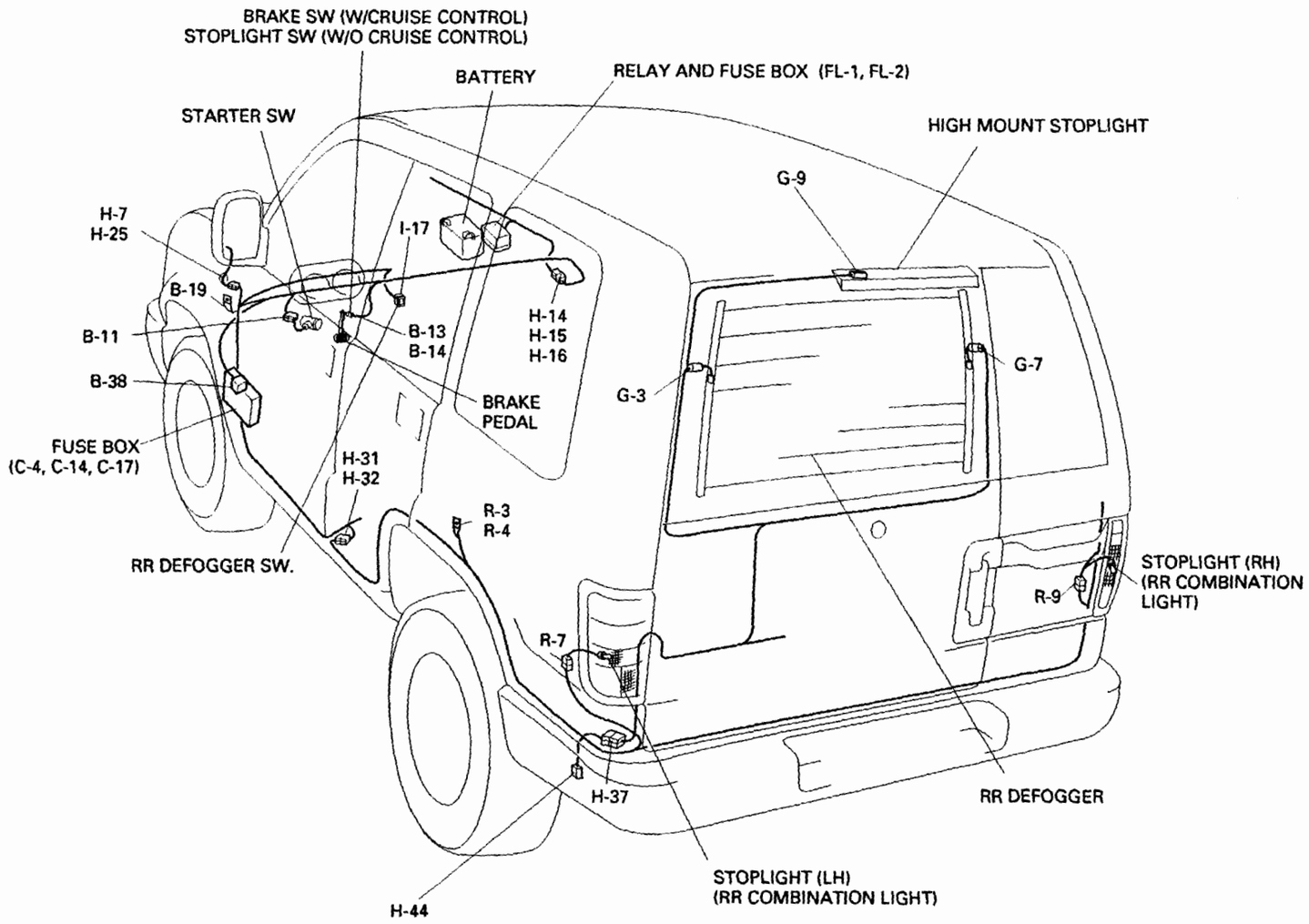

Fig. 8-116

CIRCUIT DIAGRAM

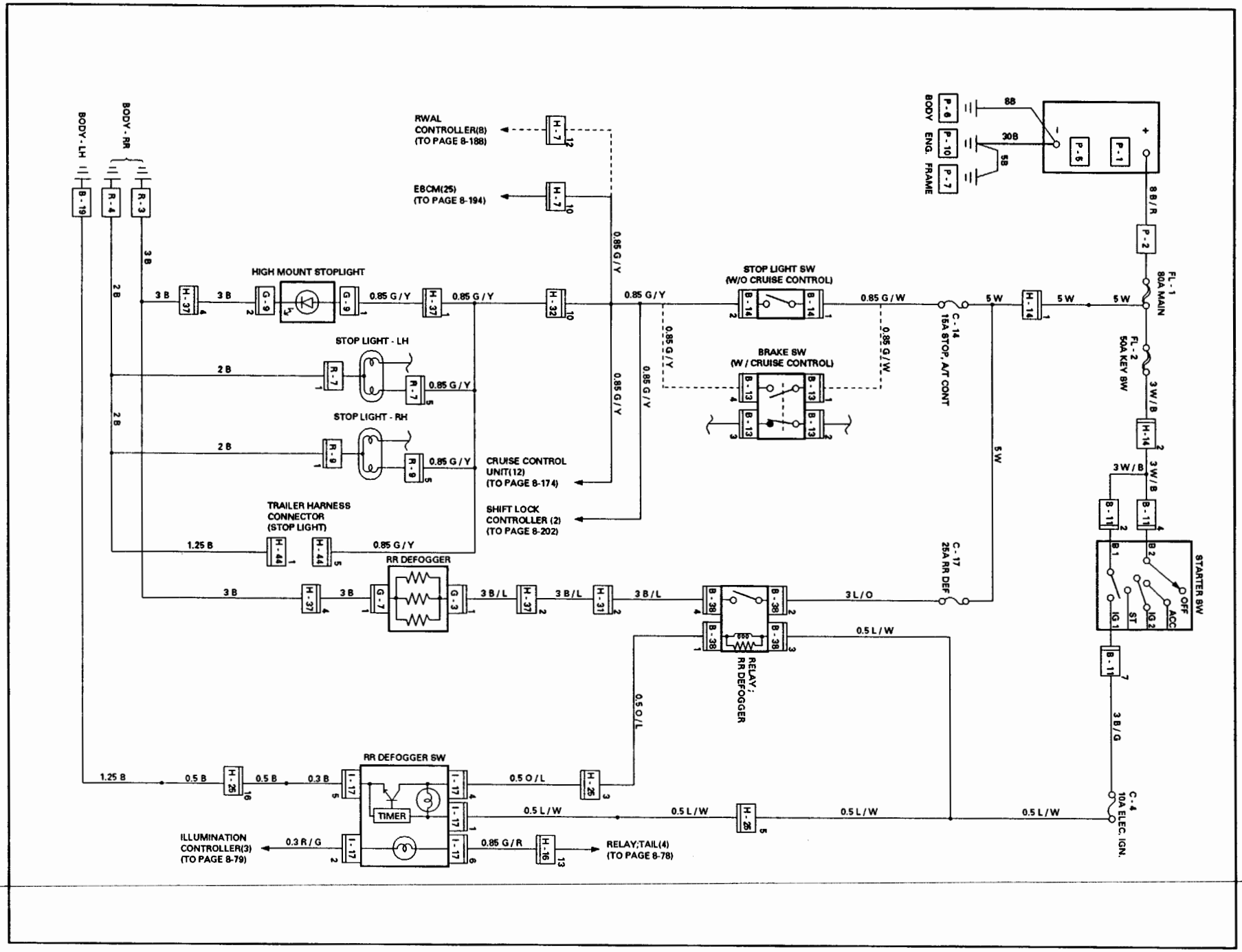

Fig. 8-117

CONNECTOR LIST

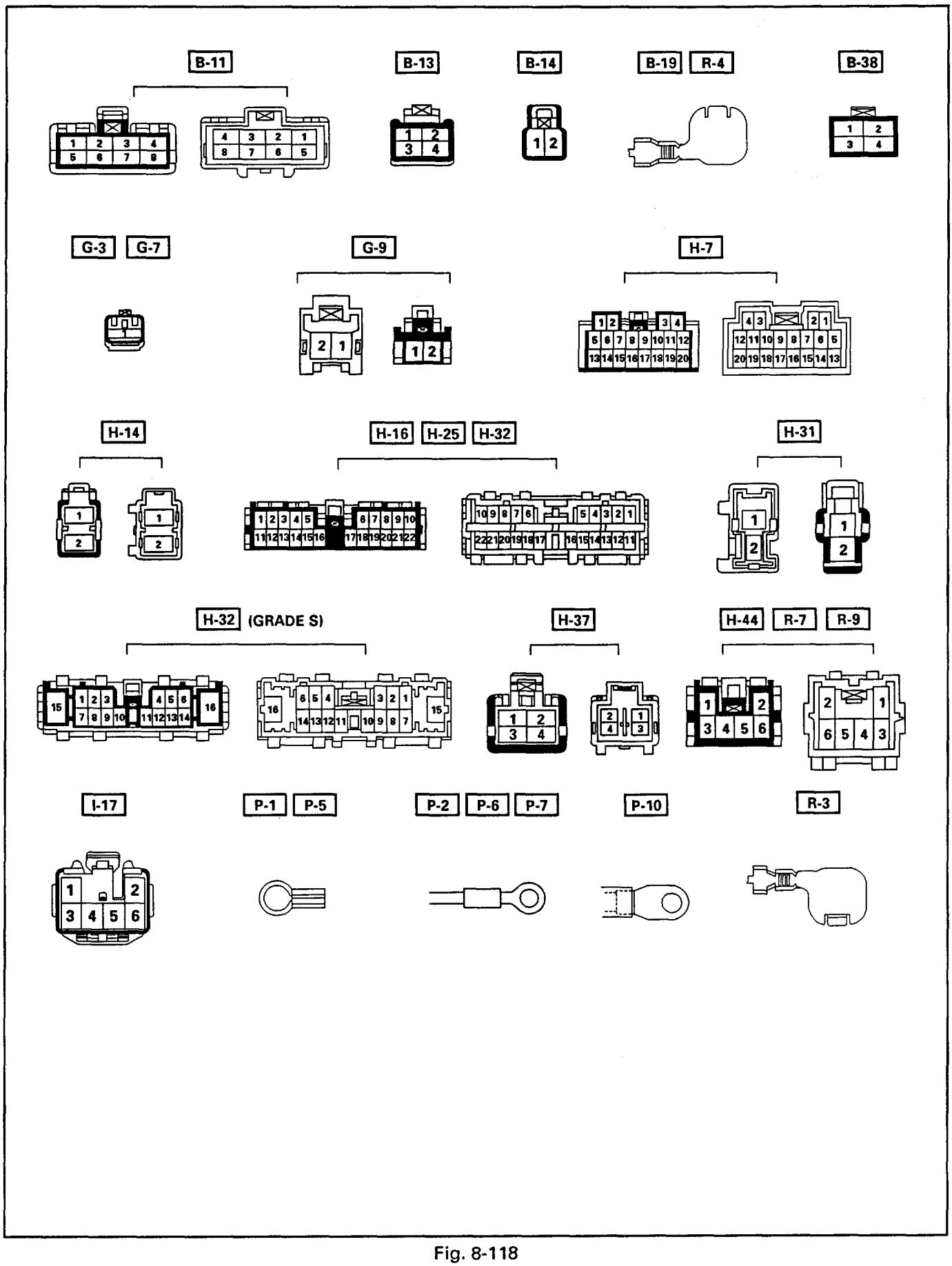

Fig. 8-118

DIAGNOSIS

QUICK CHART FOR CHECK POINTS

1. Stoplight

Trouble mode \ Check point	Fuse C-14 (15A)	Stoplight SW or brake SW	Stoplight bulb	Cable harness
1-1 Both stoplights inoperative	○ (1)	○ (3)		○ (2)
1-2 Stoplight on the left (or right) side inoperative			○ (1)	○ (2)
1-3 High mount stoplight inoperative				○ (1)

NOTE: Figure in parenthesis "( )" indicates the order of inspection.

2. Rear defogger

Trouble mode \ Check point	Fuse		Rear defogger SW	Rear defogger relay	Rear defogger	Cable harness
	C-4 (10A)	C-17 (25A)				
2-1 Rear defogger does not operate	○ (1)	○ (2)	○ (4)	○ (3)	○ (5)	○ (6)
2-2 Rear defogger timer does not function			○ (1)			

NOTE: Figure in parenthesis "( )" indicates the order of inspection.

1-1 BOTH STOPLIGHTS INOPERATIVE

- IS FUSE C-14 (15A) NORMAL?

YES

- IS R-4 SECURELY GROUNDED?

NO

REPLACE THE FUSE

YES

- IS BATTERY VOLTAGE APPLIED TO 1 B-14 (1 B-13) OF THE STOPLIGHT SW (OR THE BRAKE SW)?

NO

GROUND IT SECURELY

YES

- REMOVE THE STOPLIGHT SW (OR THE BRAKE SW).
- IS THERE ANY CONTINUITY BETWEEN 1 B-14 AND 2 B-14 (OR 1 B-13 AND 4 B-13) OF THE SWITCH WHEN PUSH ROD IS OUT?

NO

REPAIR A POOR CONNECTION AT CONNECTORS OR AN OPEN CIRCUIT BETWEEN THE FUSE C-14 (15A) AND 1 B-14 (1 B-13).

YES

- DOES THE PUSH ROD OF THE STOPLIGHT SW (OR THE BRAKE SW) OPERATE SMOOTHLY?

NO

REPLACE THE STOPLIGHT SW (OR BRAKE SW).

YES

REPAIR A POOR CONNECTION OF CONNECTORS OR AN OPEN CIRCUIT BETWEEN 2 B-14 (4 B-13) AND 10 H-32

NO

REPLACE THE STOPLIGHT SW (OR BRAKE SW).

1-2 STOPLIGHT ON THE LEFT (OR RIGHT) SIDE INOPERATIVE

- IS THE STOPLIGHT BULB ON THE LEFT (OR RIGHT) SIDE NORMAL?

YES

- IS THERE ANY CONTINUITY BETWEEN THE STOPLIGHT CONNECTOR 5 [R-7] (5 [R-9]) AND 10 [H-32]?

YES

REPAIR A POOR CONNECTION AT CONNECTORS OR AN OPEN CIRCUIT BETWEEN 1 [R-7] (1 [R-9]) AND [R-4]

NO

REPAIR A POOR CONNECTION AT CONNECTORS OR AN OPEN CIRCUIT IN THE CIRCUIT

NO

REPLACE THE BULB

1-3 HIGH MOUNT STOPLIGHT INOPERATIVE

- IS [R-3] SECURELY GROUNDED?

YES

- REMOVE THE HIGH MOUNT STOPLIGHT
- IS THERE ANY CONTINUITY BETWEEN THE HIGH MOUNT STOPLIGHT CONNECTOR 1 [G-9] AND 2 [G-9]

YES

- IS THE BATTERY VOLTAGE APPLIED BETWEEN 1 [G-9] AND THE GROUND WHEN THE BRAKE PEDAL IS DEPRESSED?

YES

- REPAIR A POOR CONNECTION AT THE CONNECTORS OR AN OPEN CIRCUIT BETWEEN 2 [G-9] AND [R-3]

NO

REPAIR A POOR CONNECTION AT THE CONNECTORS OR AN OPEN CIRCUIT BETWEEN 1 [G-9] AND 1 [H-37]

NO

REPAIR OR REPLACE THE HIGH MOUNT STOPLIGHT

NO

GROUND IT SECURELY

2-1 REAR DEFOGGER DOES NOT OPERATE

- ARE THE FUSES C-4 (10A) AND C-17 (25A) NORMAL?

YES

- IS THE REAR DEFOGGER RELAY NORMAL?

NO

REPLACE THE FUSE.

YES

- IS THE REAR DEFOGGER SWITCH NORMAL?

NO

REPLACE THE RELAY

YES

- ARE R-3 AND B-19 GROUNDED SECURELY?

NO

REPAIR OR REPLACE THE SWITCH.

YES

- TURN ON THE STARTER SWITCH AND THE REAR DEFOGGER SWITCH.
- IS THERE A BATTERY VOLTAGE APPLIED BETWEEN THE REAR DEFOGGER CONNECTOR 1 G-3 AND THE GROUND?

NO

GROUND THEM SECURELY.

YES

REPAIR A POOR CONNECTION OF THE CONNECTORS
OR AN OPEN CIRCUIT BETWEEN 1 G-7 AND R-3

NO

REPAIR A POOR CONNECTION AT THE CONNECTORS OR AN OPEN CIRCUIT IN EACH OF THE FOLLOWING CONNECTIONS: FUSE C-17 (25A) AND 2 B-38, FUSE C-4 (10A) AND 3 B-38, 4 B-38 AND 1 G-3, 4 I-17 AND 1 B-38, 5 I-17 AND B-19.

2-2 REAR DEFOGGER TIMER DOES NOT FUNCTION

REPLACE THE REAR DEFOGGER SWITCH

STARTER SWITCH

Refer to "START AND CHARGING" in this section.

STOPLIGHT SWITCH (FOR VEHICLES W/O CRUISE CONTROL)

INSPECTION

1. Check to see if the stoplight switch is installed correctly to the specified position. Adjust the position when the result of the inspection is found abnormal.
2. Check to see if there is any continuity between the terminals of the stoplight switch. (Fig. 8-119) Replace the switch when the result of inspection is found abnormal.

B-14

SW position \ Terminal No.	1	2
Depress brake pedal (Push rod out)	○	○
Release brake pedal (Push rod in)		

Fig. 8-119

REMOVAL (FIG. 8-120)

Preparation: Disconnect the battery ground cable.

1. **Stoplight switch**
   - Disconnect the connector.
   - Loosen the lock nut of the switch.
   - Remove the switch by turning it.

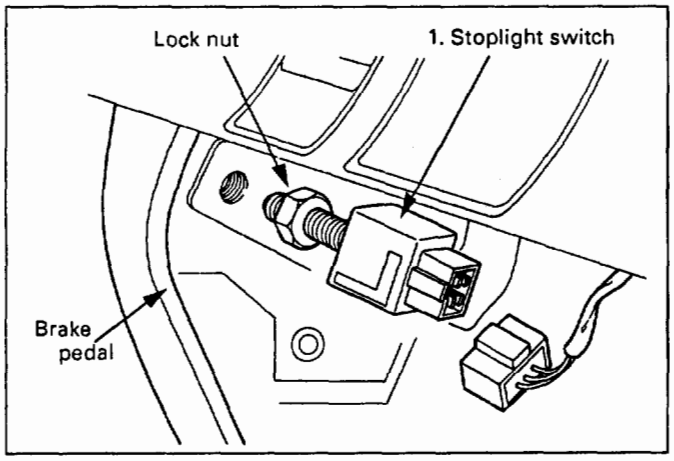

Fig. 8-120

INSTALLATION

To install, follow the removal steps in the reverse order, noting the following points.

1. Check to see if the brake pedal has been returned by the return spring to the specified position.
2. Turn the stoplight switch clockwise until the tip of the threaded portion of the switch contacts the pedal arm.
3. Turn the switch counterclockwise until the space between the tip of the threaded portion and the pedal arm is 0.5 to 1.0mm (0.02 – 0.04in.) (Fig. 8-121)

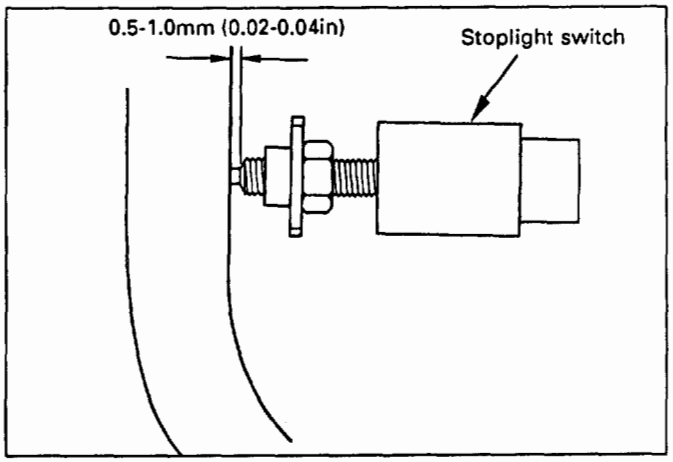

Fig. 8-121

BRAKE SWITCH (FOR VEHICLES W/ CRUISE CONTROL)

INSPECTION

1. Check to see if the brake switch is installed correctly to the specified position. Adjust the position if the result of inspection is found abnormal.
2. Check to see if there is any continuity between the terminals of the brake switch. (Fig. 8-122) Replace the switch when the result of inspection is found abnormal.

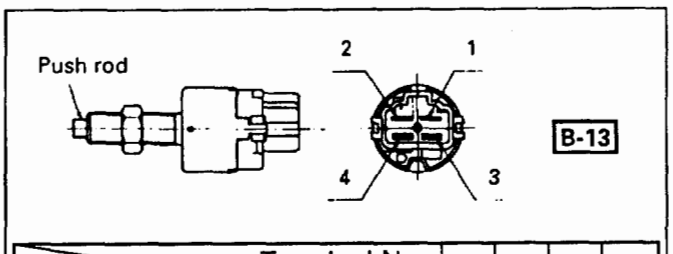

B-13

SW position \ Terminal No.		1	2	3	4
Stoplight	Depress brake pedal (push rod out)	○			○
Cruise control	Release brake pedal (push rod in)		○	○	

Fig. 8-122

REMOVAL (FIG. 8-123)

Preparation: Disconnect the battery ground cable.

1. **Brake switch**
   - Disconnect the connector
   - Loosen the lock nuts of the switch.
   - Remove the switch by turning it.

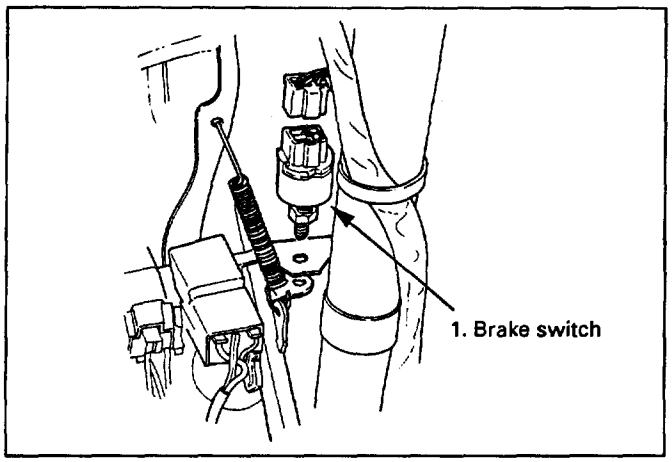

Fig. 8-123

INSTALLATION

To install, follow the removal steps in the reverse order, noting the following points.

1. Check to see if the brake pedal has been returned by the return spring to the specified position.
2. Turn the switch clockwise until the tip of the threaded portion of the brake switch contacts the pedal arm.
3. Turn the switch counterclockwise until the space between the tip of the threaded portion and the pedal arm is 0.5 to 1.0mm (0.02 – 0.04in.). (Fig. 8-124)

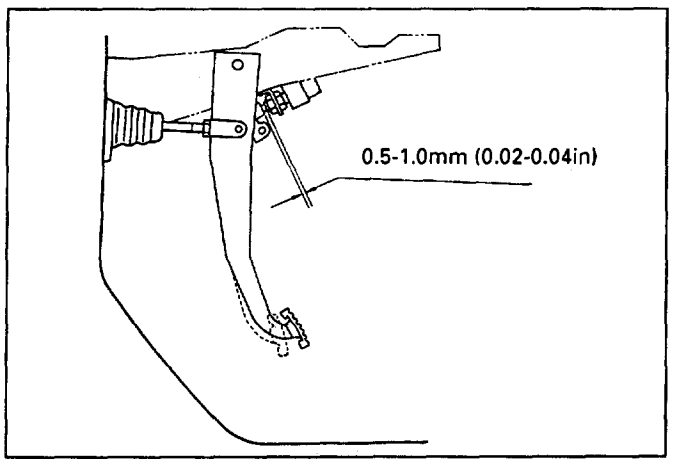

Fig. 8-124

STOPLIGHT BULB

Refer to "Front side marker light, Parking light, Tail light, License plate light and Illumination light" in this section.

HIGH MOUNT STOPLIGHT

REMOVAL (FIG. 8-125)

Preparation: Disconnect the battery ground cable.

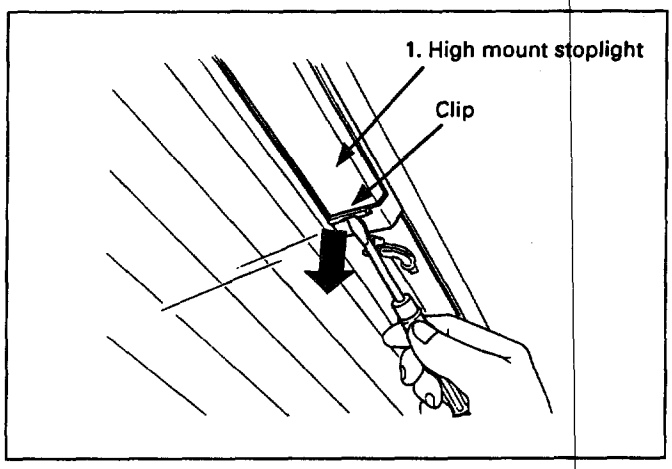

Fig. 8-125

1. **High mount stoplight**
   - Remove the clips.
   - Pull out the high mount stoplight.
   - Remove the connector.

INSTALLATION (FIG. 8-126)

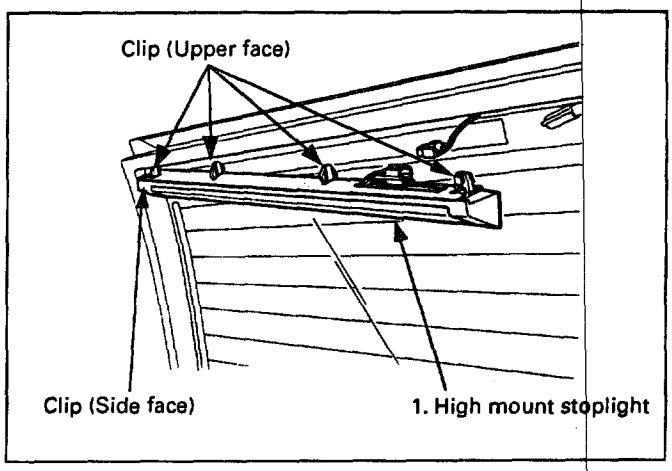

Fig. 8-126

1. **High mount stoplight**
   - Insert the clips into the high mount stoplight.
   - Reconnect the connector.
   - Install the high mount stoplight.

REAR DEFOGGER SWITCH

INSPECTION

Check to see if there is any continuity between the terminals of the defogger switch. (Fig. 8-127) Replace the switch, when the result of inspection is found abnormal.

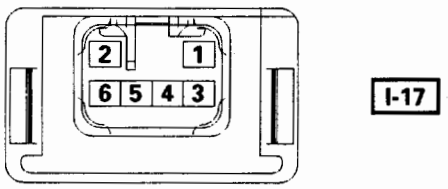

I-17

SW position \ Terminal No.	1	4	5	2	6
ON	○	○	○		
OFF	○	○			

Fig. 8-127

REMOVAL (FIG. 8-128)

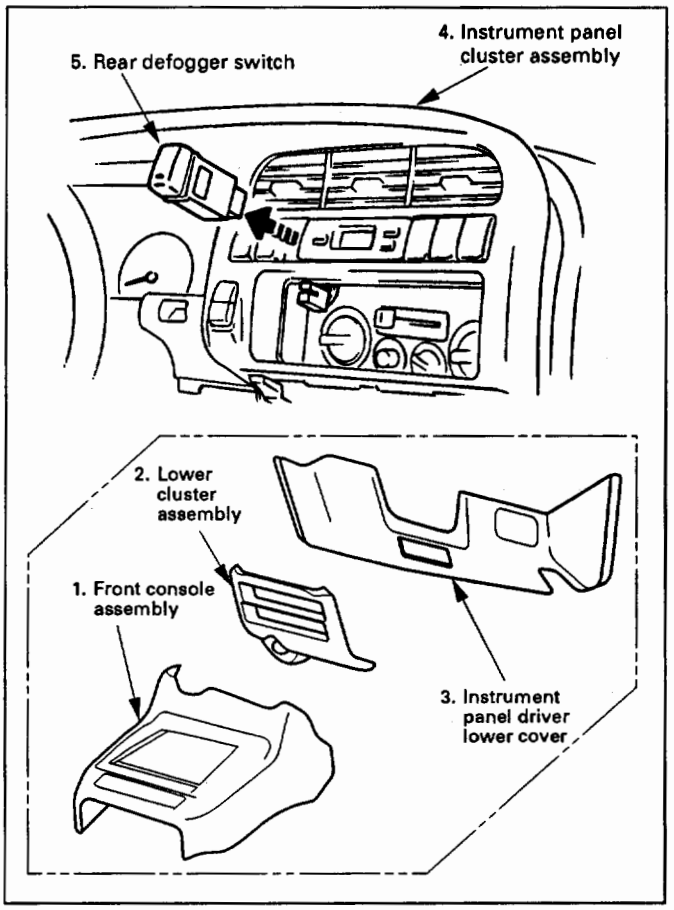

Fig. 8-128

Preparation: Disconnect the battery ground cable.

1. **Front console assembly**
2. **Lower cluster assembly**
3. **Instrument panel driver lower cover**
4. **Instrument panel cluster assembly**
   - Refer to FOG LIGHT SWITCH removal steps in this section.
5. **Rear defogger switch**
   - To remove the switch, pushing the lock from the back side of the cluster assembly.

INSTALLATION

To install, follow the removal steps in the reverse order, noting the following point.

1. Push in the switch with your fingers until it locks securely.

REAR DEFOGGER HEAT WIRES

CAUTION:

- Heat wires are printed on the inner side of the rear glass.
  To clean, use a soft cloth and wipe horizontally along the wires.
- Never use glass cleaner or equivalent.

INSPECTION

Measure the voltage of heat wire.
Repair the heat wire when the result of inspection is found abnormal.

CAUTION:

- When measuring voltage, wind a piece of tin foil around the tip of the negative probe and press the foil against the wire with your finger (Fig. 8-129).

1. Turn the starter switch on.
2. Turn the rear defogger switch on.
3. Measure the voltage between the three points on the heat wire and the (-) terminal with a voltmeter.
4. Check that the voltage becomes smaller from Ⓐ to Ⓑ to Ⓒ (Fig. 8-130).
5. If there is a place where the voltage suddenly changes to 0V, there is a OPEN CIRCUIT between there and the prior point.

6. Moving the tester probe from the position where the voltage changes to 0V toward the positive side of the heat wire, make sure that where the voltage suddenly increases, then find a point where the wire is broken (Fig. 8-131).

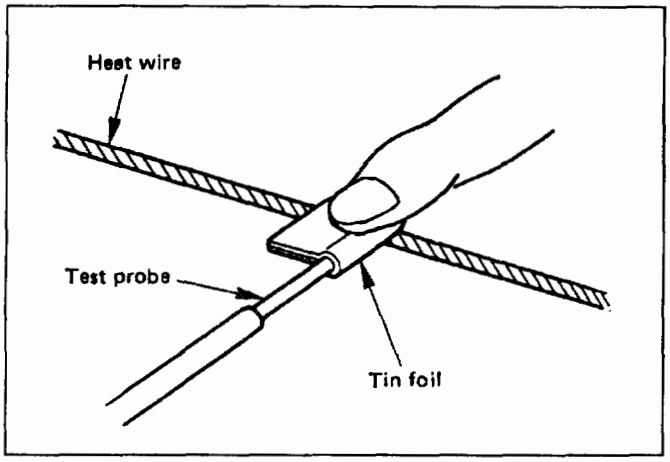

Fig. 8-129

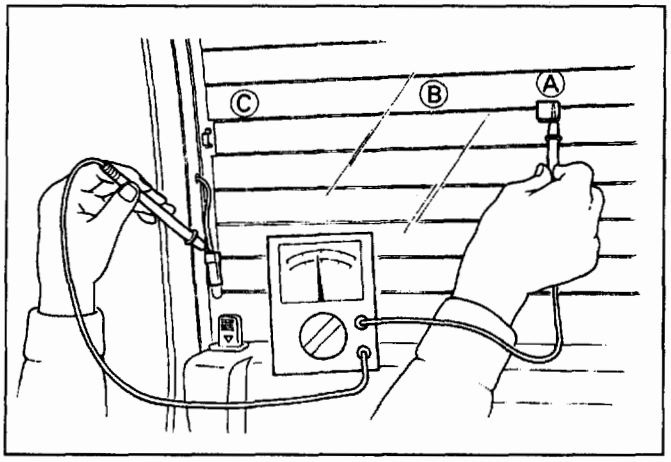

Fig. 8-130

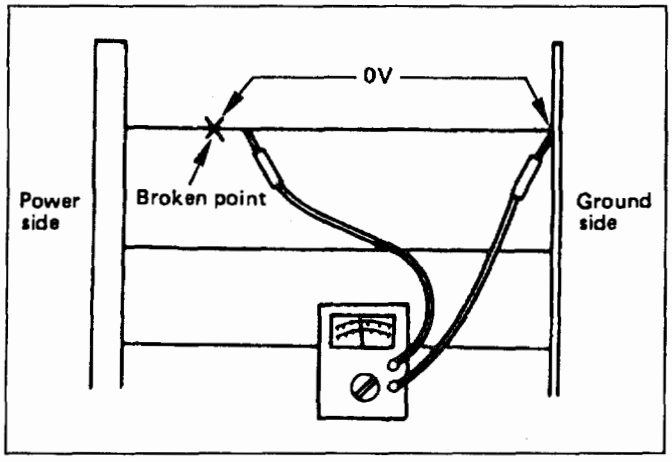

Fig. 8-131

REPAIR OF BROKEN DEFOGGER HEAT WIRE

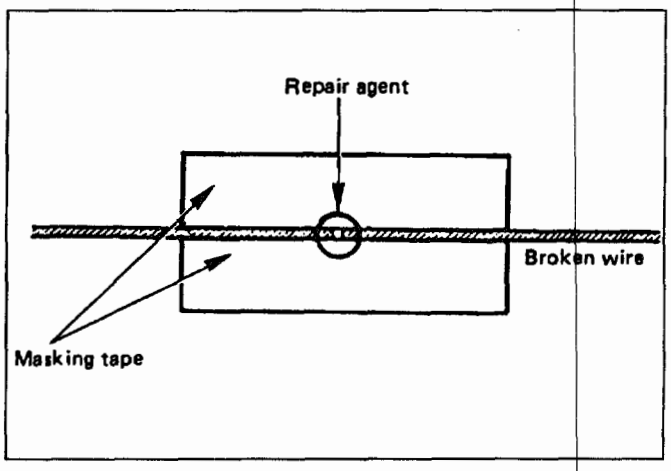

Fig. 8-132

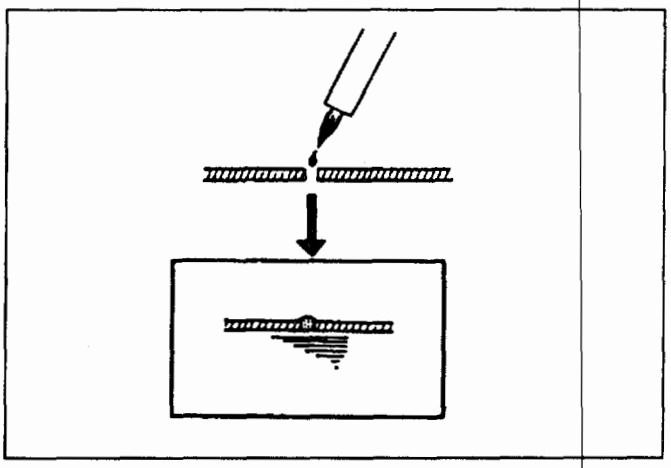

Fig. 8-133

1. Clean broken wire tips with white gasoline.
2. Place masking tape along both sides of wire to be repaired (Fig. 8-132).
3. Thoroughly mix the repair agent (Dupont paste No.4817 or equivalent).
4. Using a fine tip brush apply a small amount of repair agent to the wire (Fig. 8-133).
5. After a couple of minutes, remove the masking tape.

CAUTION
Allow to stand at least 24 hours.

NOTE:
Rear defogger grid repair kit is available at Isuzu dealer. Regarding its handling, please refer to the instruction manual enclosed in the kit.

REAR DEFOGGER RELAY

INSPECTION

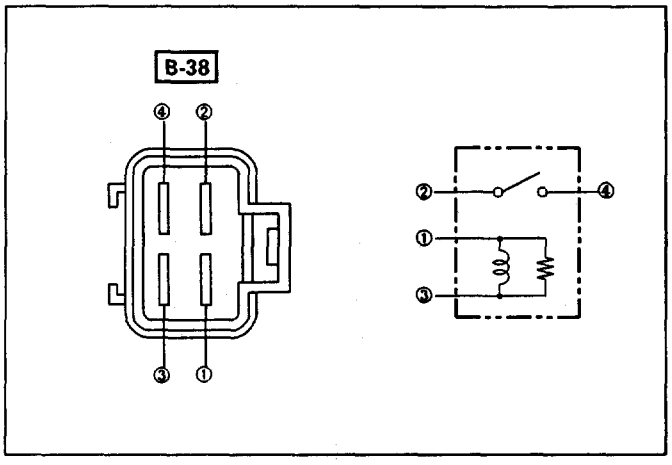

Fig. 8-134

Check to see if there is any continuity between the relay terminals. (Fig. 8-134)
Replace the relay, when the result of inspection is found abnormal.

② – ④	No continuity
(When battery voltage is applied between ① – ③)	
② – ④	Continuity

NOTE:
For the relay removal, refer to "Connector Handling" under "NOTES FOR WORKING ON ELECTRICAL ITEMS" in this section.

TURN SIGNAL LIGHT, HAZARD WARNING LIGHT, CORNERING LIGHT, BACKUP LIGHT AND HORN

GENERAL DESCRIPTION

The circuit consists of the starter switch, lighting switch, turn signal/cornering switch (combination switch), turn signal light, cornering light, hazard warning switch, flasher unit, mode switch (A/T), backup light switch, backup light, horn switch and horn.

When turning on the respective switches with the starter switch on, the turn signal light and the backup light will operate. When the turn signal light is flashing, the indicator light in the meter also starts flashing.

When the hazard warning switch is turned on, the current flows to the flasher unit through the hazard warning switch to cause the hazard warning light to flash, independent of the position of the starter switch. At the same time, the indicator lights in the meter also start flashing.

When the turn signal lever is set in either the left or right direction while the headlight is on, the cornering switch incorporated into the combination switch is activated to illuminate the appropriate cornering light.

When the horn switch is turned on, (independent of the position of the starter switch) the relay is activated to sound the horn.

OPERATION OF TURN SIGNAL AND CORNERING LIGHT CIRCUIT

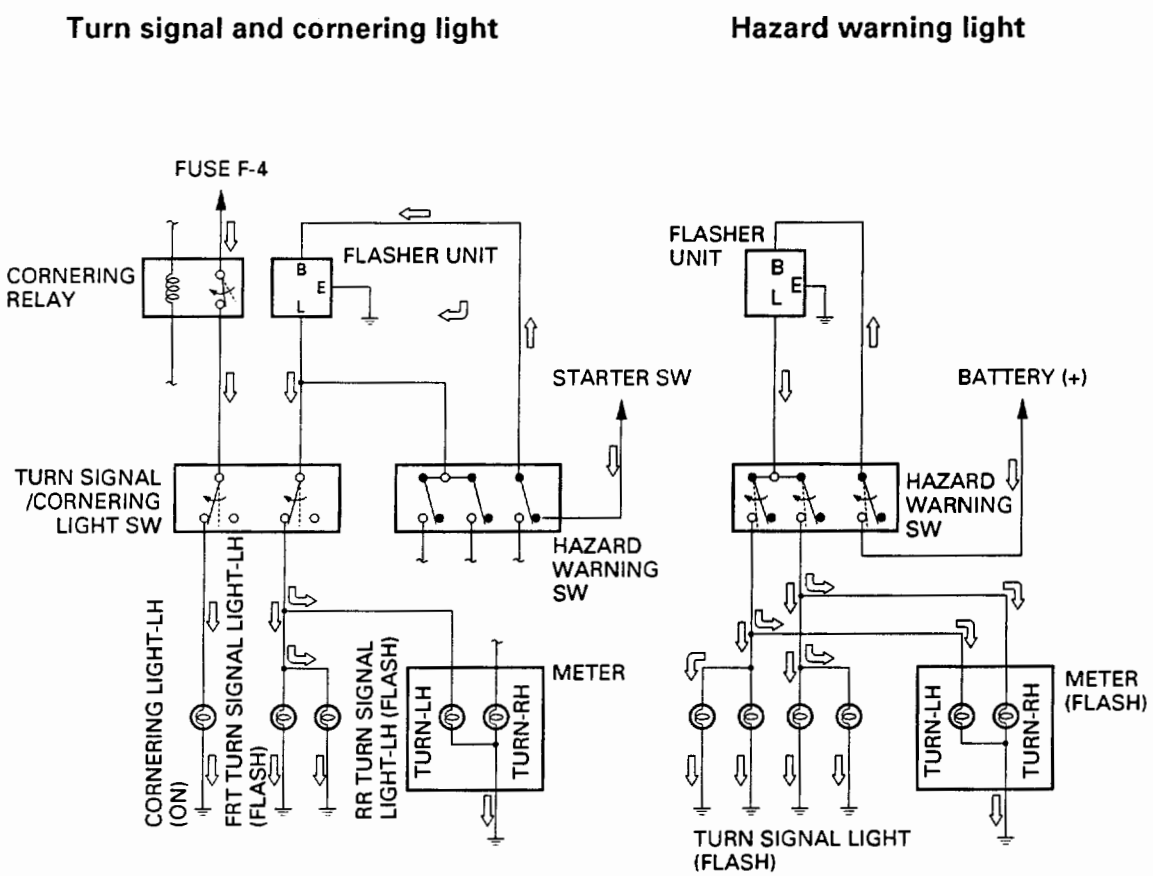

NOTE: Arrow marks " ⇨ " indicate the direction of current

Fig. 8-135

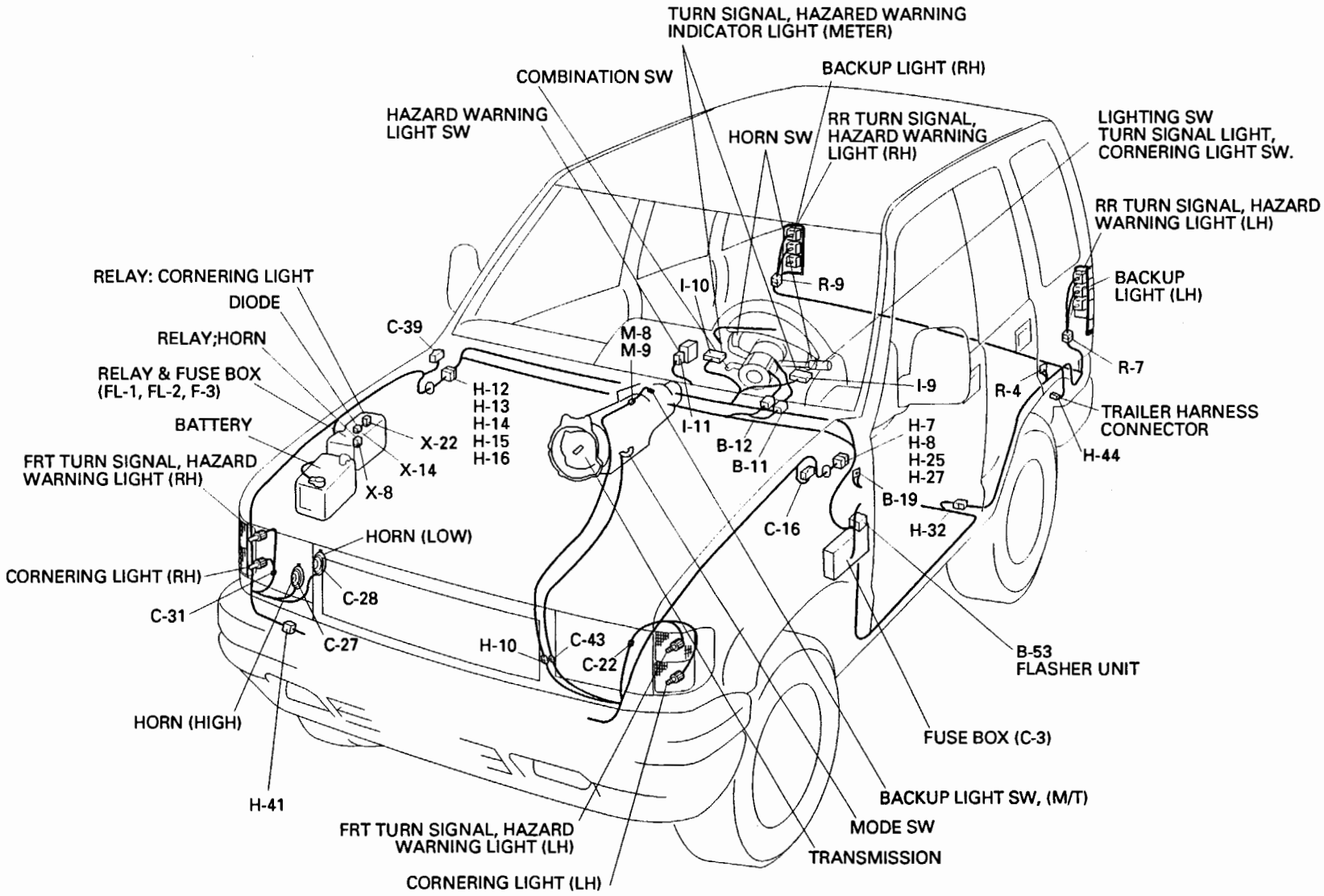
TURN SIGNAL, HAZARED WARNING INDICATOR LIGHT (METER)
COMBINATION SW
BACKUP LIGHT (RH)
HAZARD WARNING LIGHT SW
HORN SW
RR TURN SIGNAL, HAZARD WARNING LIGHT (RH)
LIGHTING SW TURN SIGNAL LIGHT, CORNERING LIGHT SW.
RR TURN SIGNAL, HAZARD WARNING LIGHT (LH)
RELAY: CORNERING LIGHT
DIODE
RELAY;HORN
RELAY & FUSE BOX (FL-1, FL-2, F-3)
BATTERY
FRT TURN SIGNAL, HAZARD WARNING LIGHT (RH)
C-39
H-12
H-13
H-14
H-15
H-16
X-22
X-14
X-8
I-10
R-9
M-8
M-9
I-9
I-11
B-12
B-11
H-7
H-8
H-25
H-27
B-19
H-32
C-16
R-4
BACKUP LIGHT (LH)
R-7
TRAILER HARNESS CONNECTOR
H-44
HORN (LOW)
CORNERING LIGHT (RH)
C-31
C-28
C-27
H-10
C-43
C-22
B-53 FLASHER UNIT
HORN (HIGH)
H-41
FUSE BOX (C-3)
BACKUP LIGHT SW, (M/T)
MODE SW
TRANSMISSION
FRT TURN SIGNAL, HAZARD WARNING LIGHT (LH)
CORNERING LIGHT (LH)

Fig. 8-136

CIRCUIT DIAGRAM

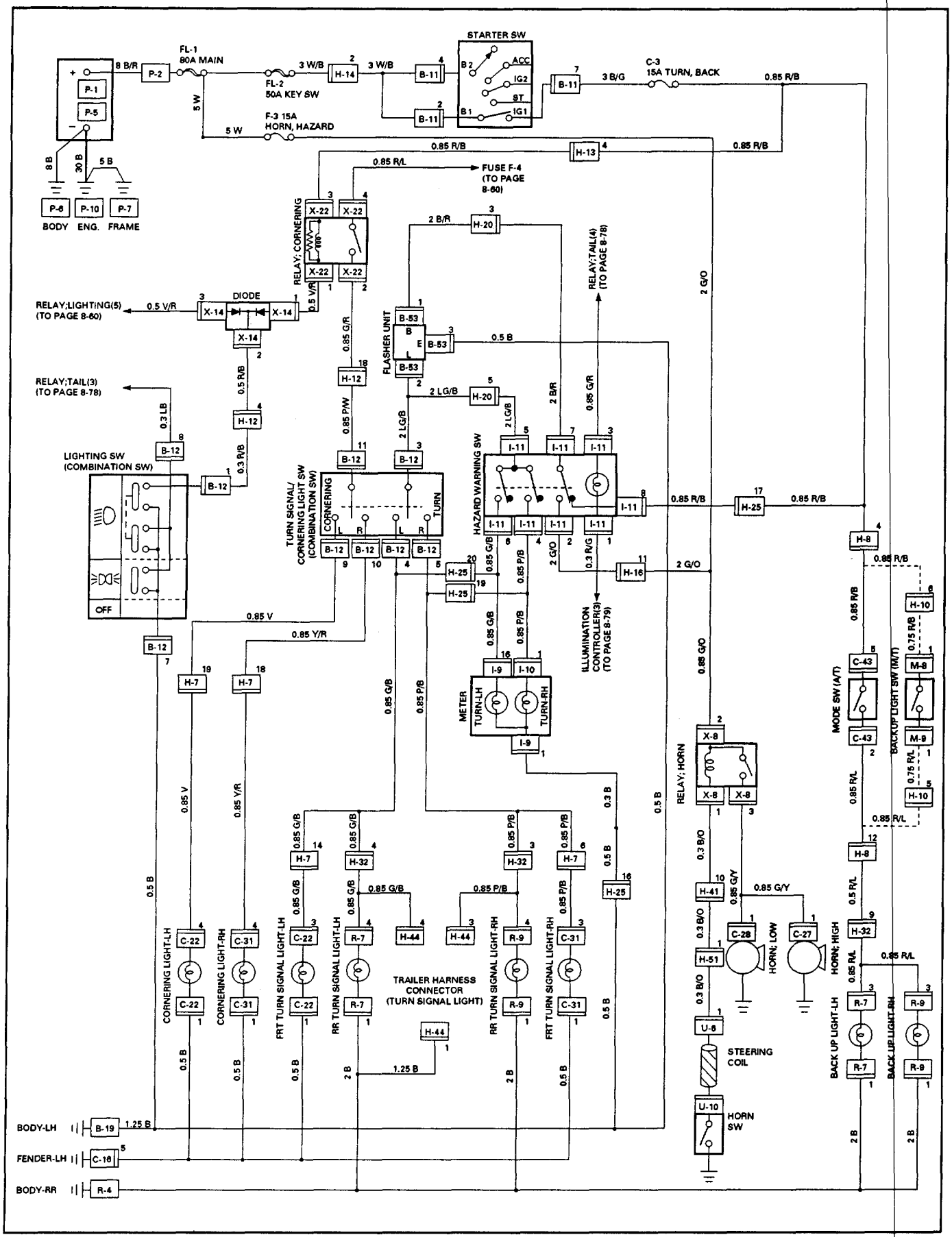

Fig. 8-137

CONNECTOR LIST

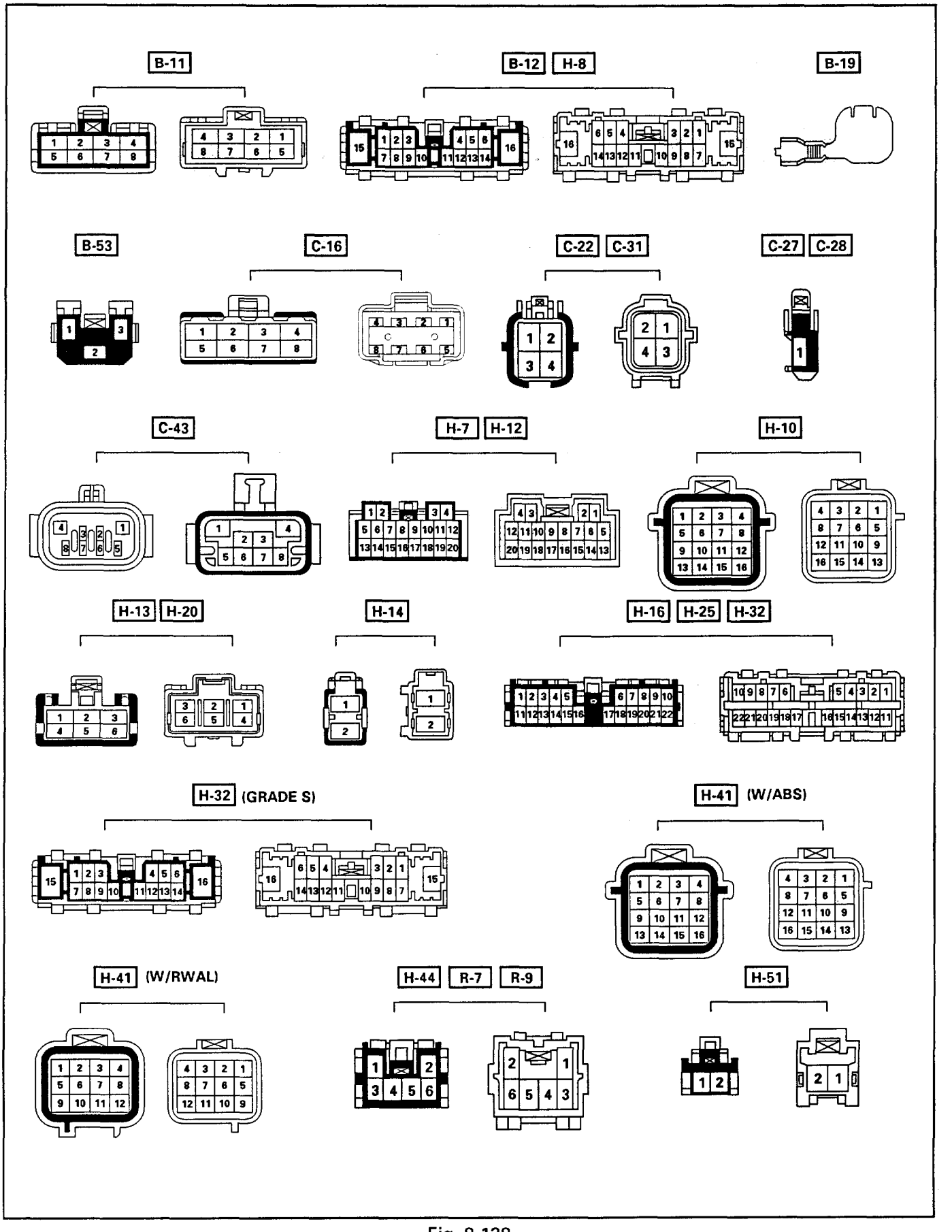

Fig. 8-138

CONNECTOR LIST

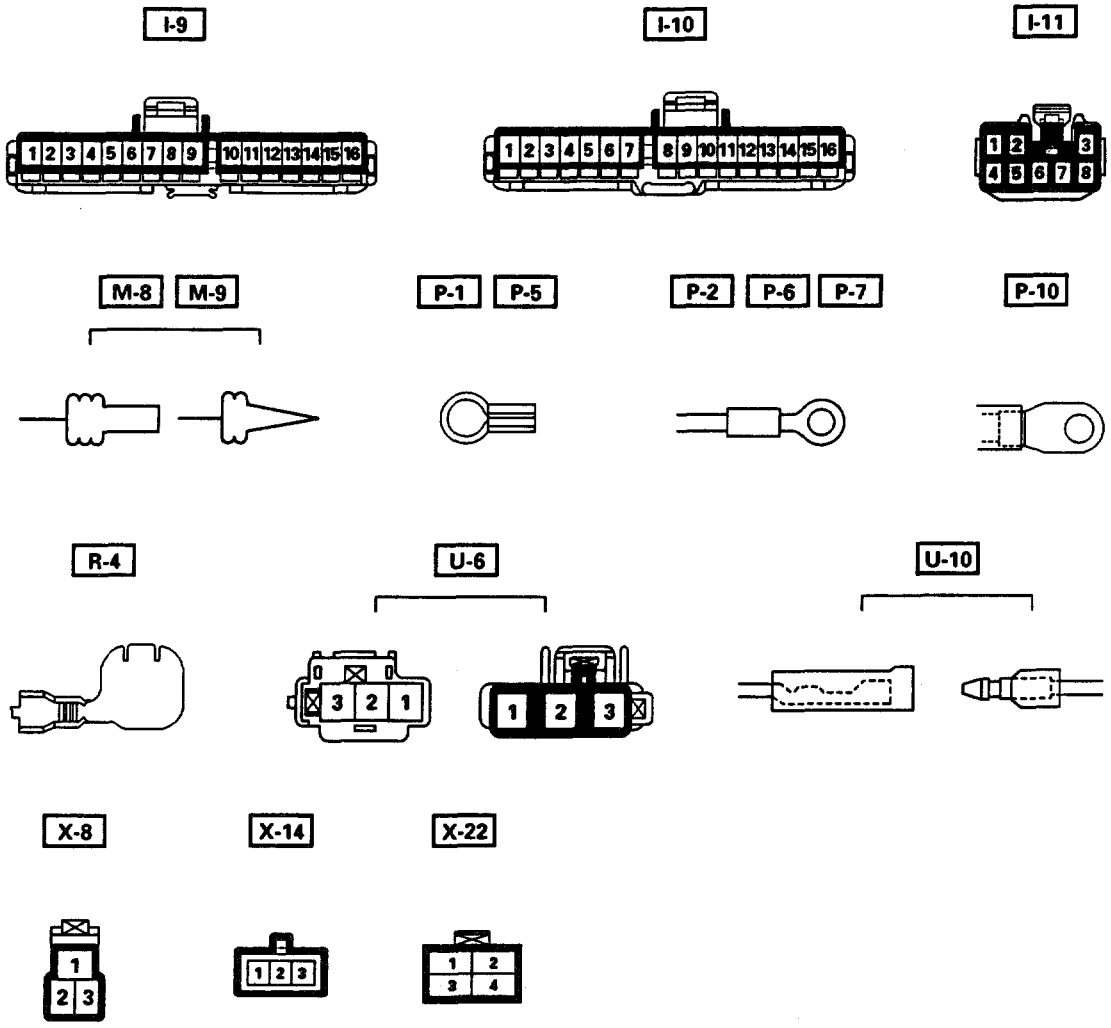

Fig. 8-139

DIAGNOSIS

QUICK CHART FOR CHECK POINTS

1. Turn signal light, hazard warning light, and cornering light

Check point / Trouble mode	Fuse C-3 (15A)	Fuse F-3 (15A)	Turn cornering SW	Hazard SW	Flasher unit	Turn signal bulb	Cornering light bulb	Cornering light relay	Cable harness
1-1 Turn signal light does not flash.	○ (1)		○ (4)	○ (3)	○ (2)				○ (5)
1-2 Turn signal light flashes too quickly.						○ (1)			○ (2)
1-3 Both cornering lights inoperative.	○ (1)		○ (4)					○ (3)	○ (2)
1-4 Cornering light on the left (or right) side inoperative.			○ (2)				○ (1)		○ (3)
1-5 Cornering light remains on.			○ (1)						

NOTE: Figure in parenthesis "( )" indicates the order of inspection.

2. Backup light, horn

Check point / Trouble mode	Fuse C-3 (15A)	Fuse F-3 (15A)	Backup light SW/ mode SW	Backup light bulb	Horn	Horn switch	Horn relay	Cable harness
2-1 Both backup lights inoperative.	○ (1)		○ (3)					○ (2)
2-2 Backup light on the left (or right) side do not light up				○ (1)				○ (2)
2-3 Backup lights remain on.			○ (1)					
2-4 Horns do not sound.		○ (1)			○ (4)	○ (5)	○ (2)	○ (3)
2-5 Horns do not shut off.						○ (2)	○ (1)	○ (3)

NOTE: Figure in parenthesis "( )" indicates the order of inspection.

1-1 TURN SIGNAL LIGHT DOES NOT FLASH

- IS FUSE C-3 (15A) NORMAL?

YES

- IS THE FLASHER UNIT NORMAL?

YES

- DISCONNECT THE CONNECTORS OF THE HAZARD WARNING SWITCH
- TURN THE STARTER SWITCH ON.
- IS THERE A BATTERY VOLTAGE APPLIED BETWEEN THE HAZARD WARNING SWITCH HARNESS SIDE CONNECTOR 8 [I-11] AND THE GROUND?

YES

- WITH THE HAZARD WARNING SWITCH TURNED OFF, IS THERE CONTINUITY BETWEEN THE SWITCH CONNECTORS 7 [I-11] AND 8 [I-11] ?

YES

- DISCONNECT THE CONNECTORS OF THE FLASHER UNIT.
- IS THERE A BATTERY VOLTAGE APPLIED BETWEEN THE FLASHER UNIT HARNESS SIDE CONNECTOR 1 [B-53] AND THE GROUND?

YES

- IS [B-19] GROUNDED SECURELY?

YES

- IS THERE CONTINUITY BETWEEN THE HARNESS SIDE CONNECTORS 3 [B-53] – [B-19] ?

YES

CONTINUED ON THE FOLLOWING PAGE

NO

CONTINUED ON THE FOLLOWING PAGE

NO

GROUNDED IT SECURELY

NO

REPAIR OR REPLACE THE SWITCH

NO

REPAIR A POOR CONNECTION AT THE CONNECTORS OR AN OPEN CIRCUIT BETWEEN THE HARNESS SIDE CONNECTORS 7 [I-11] – 1 [B-53] .

NO

REPAIR A POOR CONNECTION AT THE CONNECTORS OR AN OPEN CIRCUIT BETWEEN THE FUSE C-3 (15A) 8 [I-11] .

NO

REPLACE THE FLASHER UNIT

NO

REPLACE THE FUSE

CONTINUED FROM THE PREVIOUS PAGE

- DISCONNECT THE CONNECTORS AT THE TURN SIGNAL/ CORNERING LIGHT SWITCH.
- IS THERE CONTINUITY BETWEEN THE SWITCH CONNECTORS 3 B-12 – 4 B-12 (WHEN TURNING TO THE LEFT), AND BETWEEN 3 B-12 – 5 B-12 (WHEN TURNING TO THE RIGHT)?

YES

REPAIR A POOR CONNECTION OF THE CONNECTORS OR AN OPEN CIRCUIT BETWEEN THE HARNESS SIDE CONNECTORS 2 B-53 – 3 B-12

NO

REPAIR OR REPLACE THE SWITCH.

CONTINUED FROM THE PREVIOUS PAGE

REPAIR A POOR CONNECTION AT THE CONNECTORS, OR AN OPEN CIRCUIT BETWEEN 3 B-53 AND B-19.

1-2 TURN SIGNAL LIGHT FLASHES TOO QUICKLY

REINSTALL OR REPLACE THE BULB, REPAIR AN OPEN CIRCUIT IN THE CIRCUIT, OR CHECK THE GROUND CONNECTION

1-3 BOTH CORNERING LIGHTS INOPERATIVE

- DO THE HEADLIGHT LIGHTS COME ON?

YES

- IS FUSE C-3 (15A) NORMAL?

NO

TURN THE HEADLIGHT ON. (REFER TO DIAGNOSIS CHART FOR HEADLIGHT.)

YES

- IS 5 [C-16] GROUNDED SECURELY?

NO

REPLACE THE FUSE

YES

- DISCONNECT THE CONNECTORS AT THE CORNERING RELAY.
- TURN ON THE STARTER SWITCH AND THE LIGHTING SWITCH.
- IS THERE A BATTERY VOLTAGE APPLIED BETWEEN THE RELAY HARNESS SIDE CONNECTOR 3 [X-22] AND GROUND, AND NBETWEEN 4 [X-22] AND GROUND?

NO

GROUND IT SECURELY

YES

- IS THE CORNERING RELAY NORMAL?

NO

REPAIR A POOR CONNECTION OF THE CONNECTORS OR AN OPEN CIRCUIT BETWEEN FUSE C-3 (15A) – 3 [X-22] OR BETWEEN FUSE F-4 (15A) – 4 [X-22]

YES

- DISCONNECT THE CONNECTORS AT THE TURN SIGNAL/ CORNERING LIGHT SWITCH.
- IS THERE A BATTERY VOLTAGE APPLIED BETWEEN THE SWITCH HARNESS SIDE CONNECTOR 11 [B-12] AND GROUND?

NO

REPAIR OR REPLACE THE RELAY

YES

- IS THERE CONTINUITY BETWEEN THE CORNERING LIGHT SWITCH CONNECTORS 11 [B-12] – 9 [B-12] (WHEN TURNING LEFT), AND BETWEEN 11 [B-12] – 10 [B-12] (WHEN TURNING RIGHT)?

NO

REPAIR A POOR CONNECTION AT THE CONNECTORS OR AN OPEN CIRCUIT BETWEEN 2 [X-22] AND 11 [B-12]

YES

CONTINUED ON THE FOLLOWING PAGE

NO

CONTINUED ON THE FOLLOWING PAGE

CONTINUED FROM THE PREVIOUS PAGE

REPAIR A POOR CONNECTION AT THE CONNECTORS OR AN OPEN CIRCUIT BETWEEN THE HARNESS SIDE CONNECTORS I X-22 – I X-14 .

CONTINUED FROM THE PREVIOUS PAGE

REPAIR OR REPLACE THE SWITCH.

1-4 CORNERING LIGHT ON THE LEFT (OR RIGHT) SIDE INOPERATIVE

- IS THE CORNERING LIGHT BULB ON THE LEFT (OR RIGHT) SIDE NORMAL?

YES

- REMOVE THE CORNERING LIGHT SW (COMBINATION SW)
- IS THERE CONTINUITY BETWEEN THE SW CONNECTOR 11 B-12 AND 9 B-12 (WHEN TURNING LEFT), AND 11 B-12 AND 10 B-12 (WHEN TURNING RIGHT)?

YES

- IS THERE CONTINUITY BETWEEN THE CORNERING LIGHT SW HARNESS SIDE CONNECTORS 9 B-12 AND 4 C-22 (THE LEFT SIDE CORNERING LIGHT CONNECTOR) OR 10 B-12 AND 4 C-31 (THE RIGHT SIDE CORNERING LIGHT CONNECTOR)?

YES

REPAIR A POOR CONNECTION OF THE CONNECTORS OR AN OPEN CIRCUIT BETWEEN THE CONNECTORS 1 C-22 AND 5 C-16 OR 1 C-31 AND 5 C-16

NO

REPAIR A POOR CONNECTION AT THE CONNECTORS OR AN OPEN CIRCUIT BETWEEN THE CONNECTORS 9 B-12 AND 4 C-22 OR 10 B-12 AND 4 C-31

NO

REPAIR OR REPLACE THE CORNERING LIGHT SW (COMBINATION SW)

NO

REPLACE THE BULB

1-5 CORNERING LIGHT REMAINS ON

REPAIR OR REPLACE THE CORNERING LIGHT SW (COMBINATION SW)

2-1 BOTH BACKUP LIGHTS INOPERATIVE

- IS FUSE C-3 (15A) NORMAL?

YES

- IS R-4 GROUNDED SECURELY?

YES

- TURN THE STARTER SW ON
- IS THE BATTERY VOLTAGE APPLIED BETWEEN THE MODE SW (OR BACKUP LIGHT SW) HARNESS SIDE CONNECTOR 5 C-43 (1 M-8) AND THE GROUND?

YES

- SET THE TRANSMISSION GEAR TO THE REVERSE POSITION
- WITH THE MODE SW (OR BACKUP LIGHT SW) CONNECTOR DISCONNECTED, IS THERE CONTINUITY BETWEEN SWITCH SIDE CONNECTORS 2 C-43 AND 5 C-43 (1 M-8 AND 1 M-9)?

YES

REPAIR A POOR CONNECTION AT THE CONNECTORS OR AN OPEN CIRCUIT BETWEEN 2 C-43 (1 M-9) AND 9 H-32

NO

REPAIR OR REPLACE THE MODE SW (BACKUP LIGHT SW)

NO

REPAIR AN POOR CONNECTION AT THE CONNECTORS OR AN OPEN CIRCUIT BETWEEN THE FUSE C-3 (15A) AND 5 C-43 (OR 1 M-8)

NO

GROUND IT SECURELY

NO

REPLACE THE FUSE

NOTE: Connectors in parenthesis "( )" indicates the model with manual transmission.

2-2 BACKUP LIGHT ON THE LEFT (OR RIGHT) SIDE INOPERATIVE

- IS THE BACKUP LIGHT BULB ON THE LEFT (OR RIGHT) SIDE NORMAL?

YES

- IS THERE CONTINUITY BETWEEN THE BACKUP LIGHT HARNESS SIDE CONNECTOR 3 [R-7] (3 [R-9]) AND 9 [H-32]?

YES

REPAIR A POOR CONNECTION AT THE CONNECTORS OR AN OPEN CIRCUIT BETWEEN BACKUP LIGHT HARNESS SIDE CONNECTOR 1 [R-7] (1 [R-9]) AND [R-4]

NO

REPAIR A POOR CONNECTION AT THE CONNECTORS OR AN OPEN CIRCUIT IN THE CIRCUIT

NO

REPLACE THE BULB

NOTE: Connector in parenthesis "( )" indicate a check point of the right side backup light.

2-3 BACKUP LIGHTS REMAIN ON

REPAIR OR REPLACE THE MODE SW (BACKUP LIGHT SW)

2-4 HORNS DO NOT SOUND

- IS FUSE F-3 (15A) NORMAL?

YES

- IS HORN BODY GROUNDED SECURELY?

NO

REPLACE THE FUSE

YES

- DISCONNECT THE HORN RELAY CONNECTOR
- IS THE BATTERY VOLTAGE APPLIED BETWEEN 2 [X-8] AND THE GROUND?

NO

GROUND IT SECURELY

YES

- IS THE HORN RELAY NORMAL?

NO

REPAIR A POOR CONNECTION AT THE CONNECTORS OR AN OPEN CIRCUIT BETWEEN FUSE F-3 (15A) AND 2 [X-8]

YES

- DISCONNECT THE HORN SW CONNECTOR.
- IS THE BATTERY VOLTAGE APPLIED BETWEEN [U-10] AND THE GROUND?

NO

REPLACE THE RELAY

YES

- IS THE HORN SW NORMAL?

NO

REPAIR A POOR CONNECTION AT THE CONNECTORS OR AN OPEN CIRCUIT BETWEEN 1 [X-8] AND [U-10]

YES

REPAIR A POOR CONNECTION AT THE CONNECTORS OR AN OPEN CIRCUIT BETWEEN 3 [X-8] AND 1 [C-27] (1 [C-28])

NO

REPAIR OR REPLACE THE HORN SW (COMBINATION SW)

2-5 HORNS DO NOT SHUT OFF

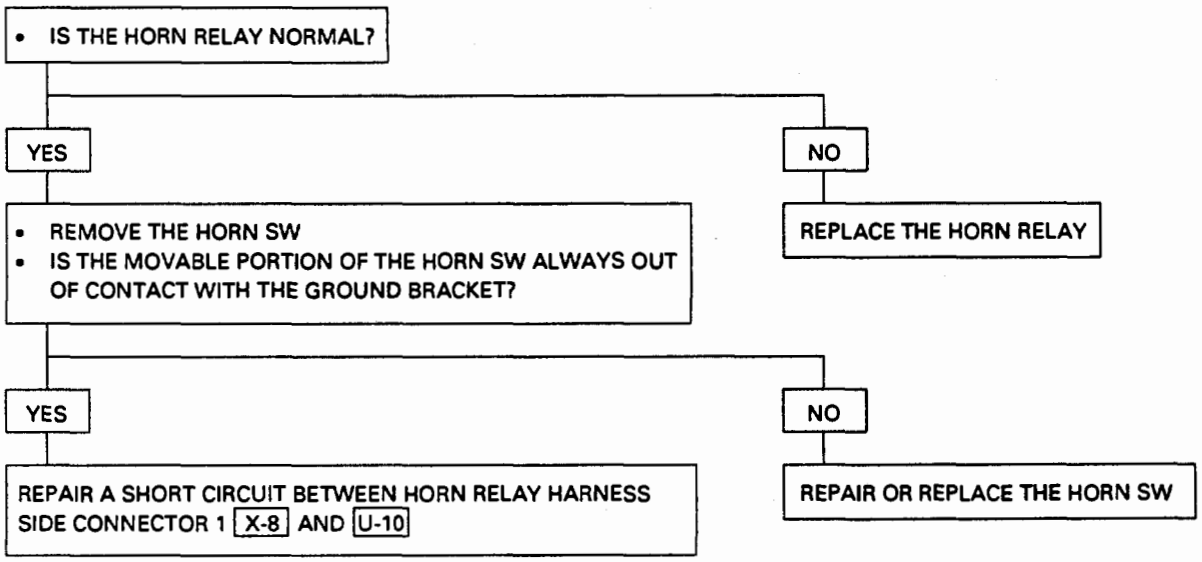

STARTER SWITCH

Refer to "START AND CHARGING" in this section.

LIGHTING SWITCH (COMBINATION SWITCH)

Refer to HEADLIGHT AND FOG LIGHT in this section.

TURN SIGNAL SWITCH/CORNERING LIGHT SWITCH (COMBINATION SWITCH)

INSPECTION

Check the continuity between the terminals of the turn signal/cornering light switch. (Fig. 8-140)

Repair or replace the switch when the result of inspection is found abnormal.

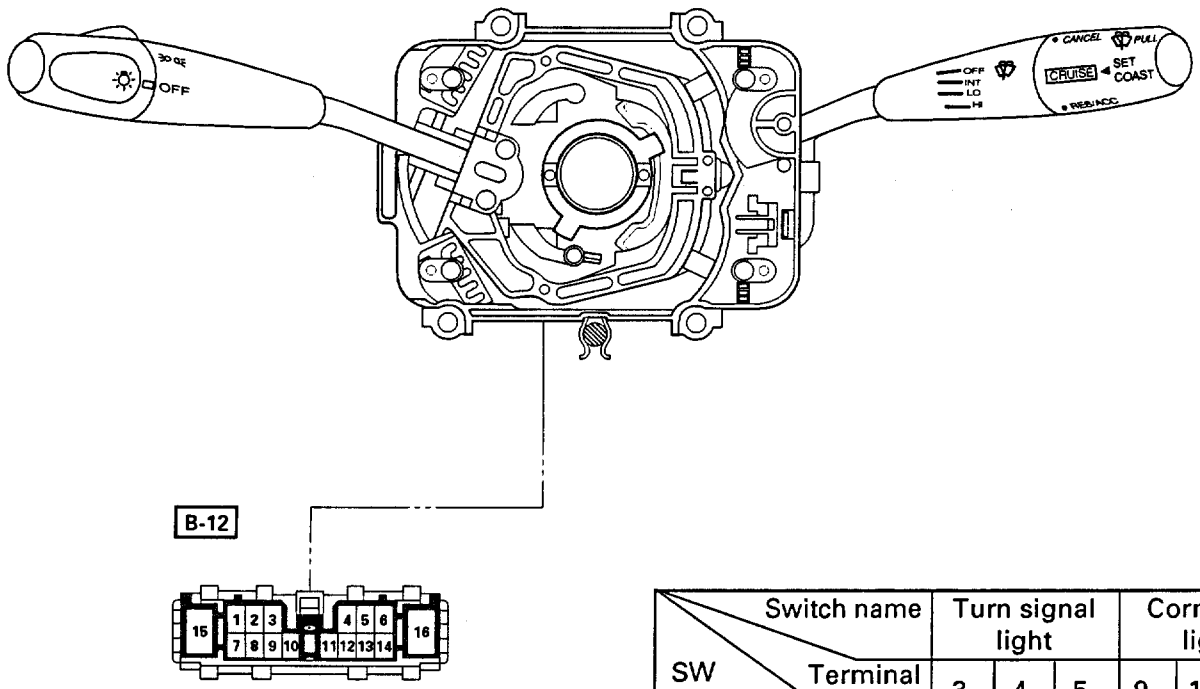

Switch name / SW position / Terminal No.	Turn signal light			Cornering light		
	3	4	5	9	10	11
When turning left	○	○		○		○
When in straight						
When turning right	○		○		○	○

Fig. 8-140

REMOVAL AND INSTALLATION

Refer to the removal and installation steps of the LIGHTING SWITCH (COMBINATION SWITCH) in "HEADLIGHT AND FOG LIGHT" of this section.

TURN SIGNAL LIGHT BULB

FRONT SIDE (FIG. 8-141)

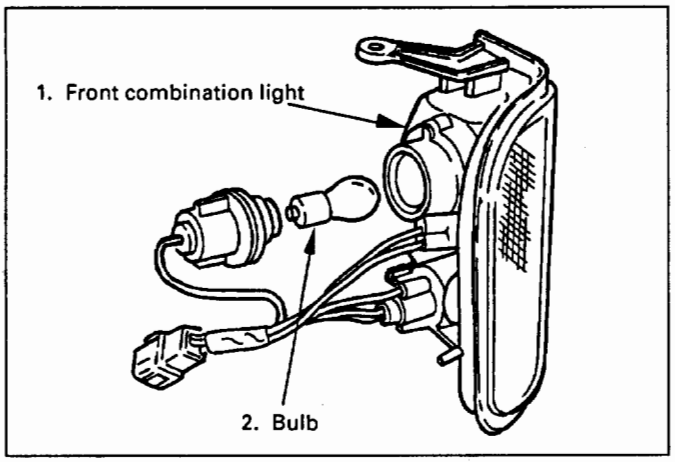

Fig. 8-141

REMOVAL

Preparation: Disconnect the battery ground cable.

1. **Front combination light**
   - Remove the screw at the upper portion of the light bracket, and remove the bracket from the fender.
2. **Bulb**
   - Remove the turn signal light socket by turning it counterclockwise.
   - Remove the bulb by turning it counterclockwise while pushing it at the same time.

INSTALLATION

To install, follow the removal steps in the reverse order.

REAR SIDE (FIG. 8-142)

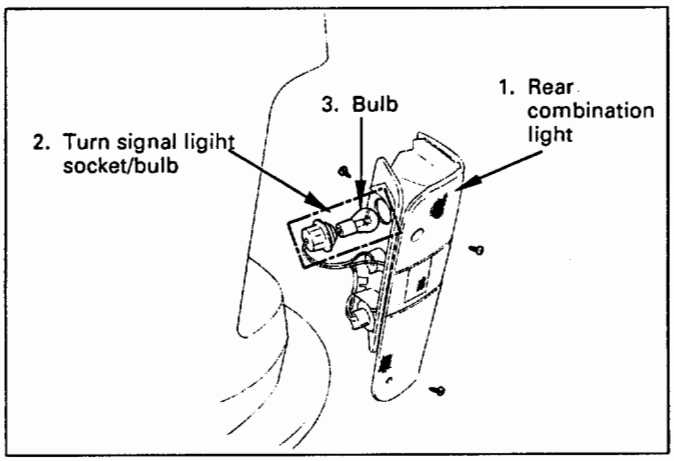

Fig. 8-142

REMOVAL

Preparation: Disconnect the battery ground cable.

1. **Rear combination light**
   - Remove the three screws and release the lock at two positions.
2. **Turn signal light socket/bulb**
   - Remove the socket by turning it counterclockwise.
3. **Bulb**
   - Remove the bulb by turning it counterclockwise while pushing it at the same time.

INSTALLATION

To install, follow the removal steps in the reverse order.

CORNERING LIGHT BULB

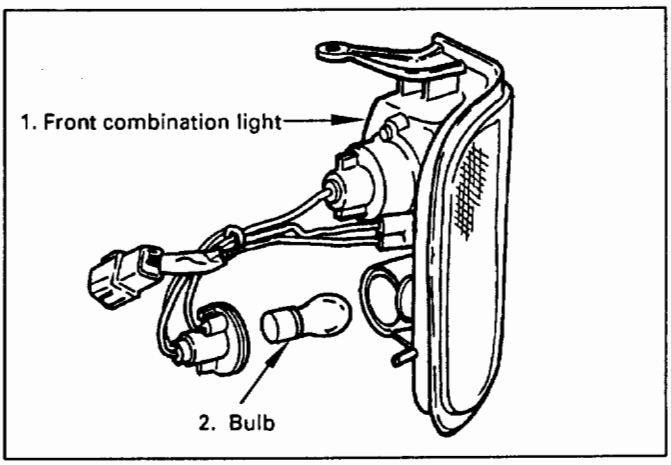

Fig. 8-143

REMOVAL (FIG. 8-143)

Preparation: Disconnect the battery ground cable.

1. **Front combination light**
   - Remove the screws at the upper portion of the light bracket, and remove the bracket from the fender.
3. **Bulb**
   - Remove the cornering light bulb socket by turning it counterclockwise.
   - Remove the bulb by turning it counterclockwise while pushing it at the same time.

INSTALLATION

To install, follow the removal steps in the reverse order.

HAZARD WARNING SWITCH

INSPECTION

Check the continuity between the terminals of the hazard warning switch. (Fig. 8-144)
Repair or replace the switch when the result of inspection is found abnormal.

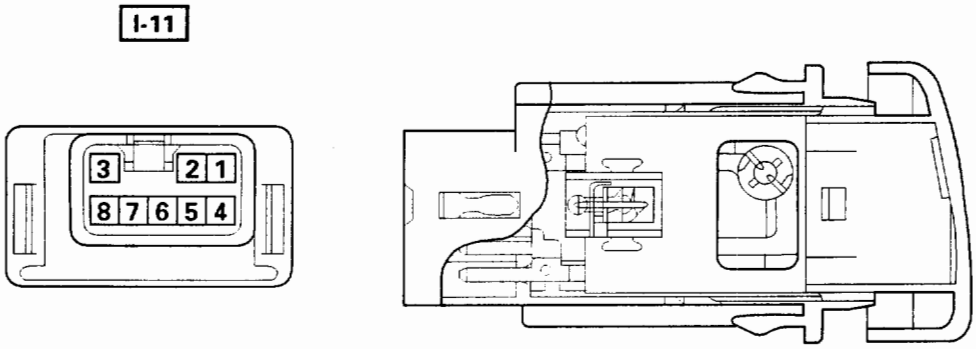

SW position \ Terminal No.	4	5	6	7	8	2	1	3
ON	○—○—○			○—○				
OFF				○—○				

Fig. 8-144

REMOVAL (FIG. 8-145)

Preparation: Disconnect the battery ground cable.

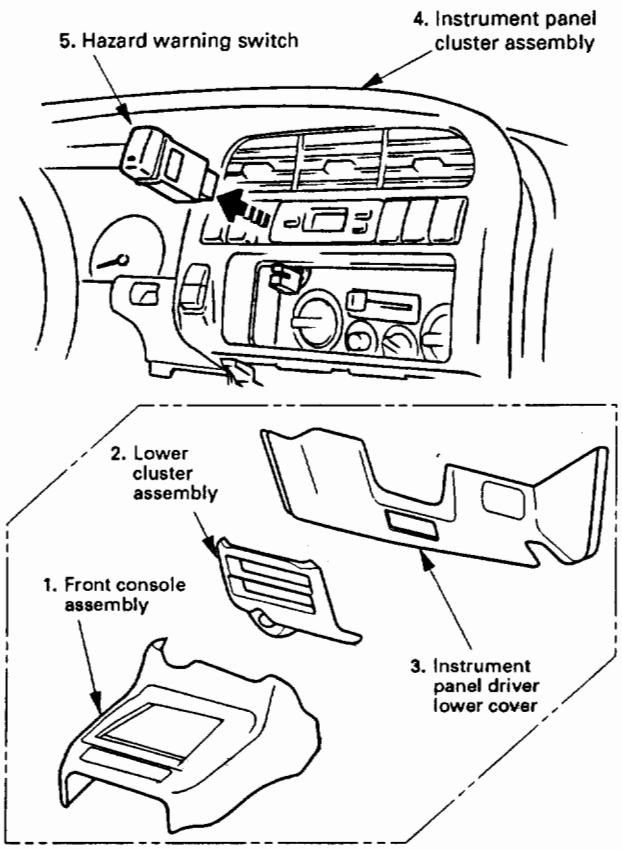

This illustration is based on rear defogger SW removal.

Fig. 8-145

1. **Front console assembly**
2. **Lower cluster assembly**
3. **Instrument panel driver lower cover**
4. **Instrument panel cluster assembly**
   - Refer to FOG LIGHT SWITCH removal steps in this section.
5. **Hazard warning switch**
   - To remove the switch, pushing the lock from the back side of the cluster assembly.

INSTALLATION

To install, follow the removal steps in the reverse order, noting the following point

1. Push in the switch with your fingers until it locks securely.

FLASHER UNIT

INSPECTION

When a 55W bulb is connected to the unit side terminals No. 1(L) and 3(E) while connecting the battery (+) terminal to terminal No. 1(B), and the battery (–) terminal to terminal No. 3(E), does the bulb light on and off? (Fig. 8-146)

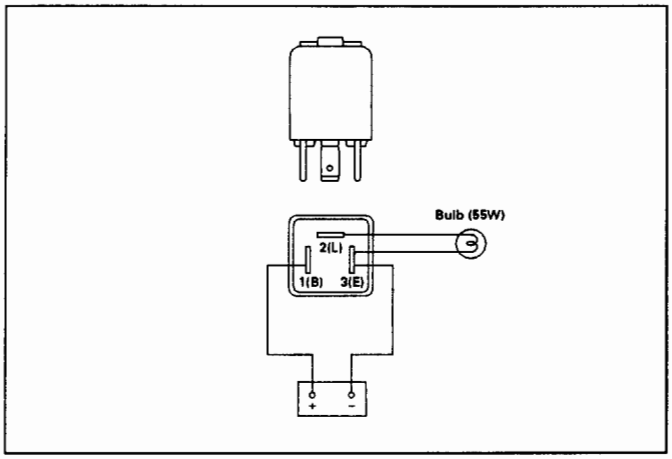

Fig. 8-146

Replace the unit when the result of inspection is found abnormal.

MODE SWITCH (A/T)

INSPECTION

1. Check the continuity between the terminals of the mode switch. (Fig. 8-147)
   Replace the switch when the result of inspection is found abnormal.

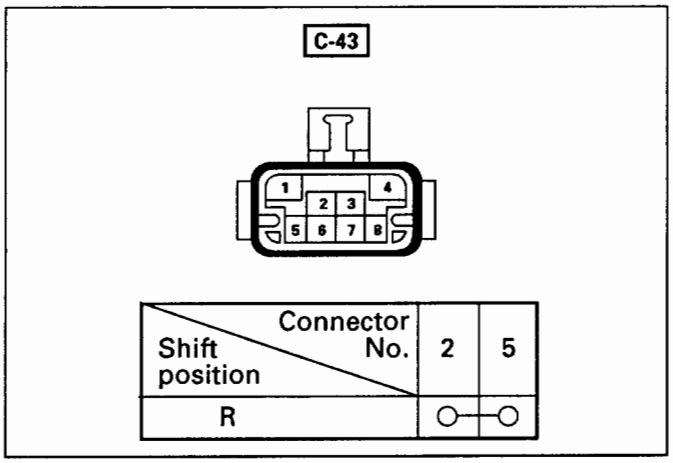

Shift position \ Connector No.	2	5
R	○	○

Fig. 8-147

REMOVAL AND INSTALLATION

1. Refer to the removal and installation steps of the mode switch in Section 7A "AUTOMATIC TRANSMISSION."

BACKUP LIGHT SWITCH (M/T)

INSPECTION (FIG. 8-148)

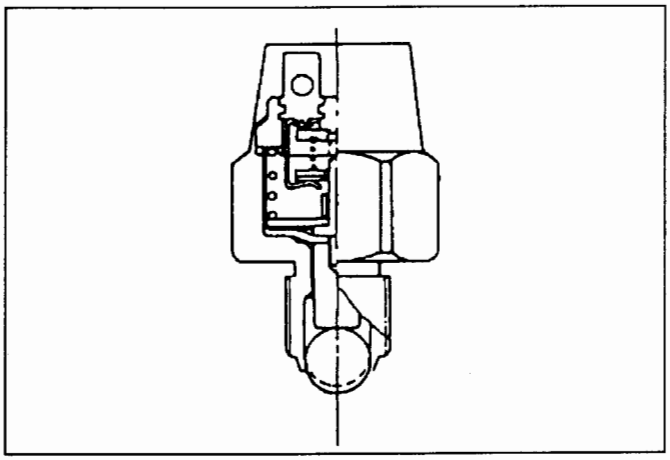

Fig. 8-148

1. With the switch installed to the transmission, check the continuity between the terminals of the switch connectors.
   When the continuity is found between the terminals only with the switch shifted to the reverse position, the switch is normal.
2. When the result of the above inspection is found abnormal, remove the switch from the transmission and conduct a test on the switch alone.
   If the continuity appears between the connector terminals when the ball of the switch is released, the switch is normal. (When the ball is pushed, the continuity disappears.)
3. If there is no continuity with the switch installed to the transmission, even though the switch is found to be normal, then adjust the stroke of the switch by changing the thickness of the switch gasket.

REMOVAL (FIG. 8-149)

Preparation: Disconnect the battery ground cable.

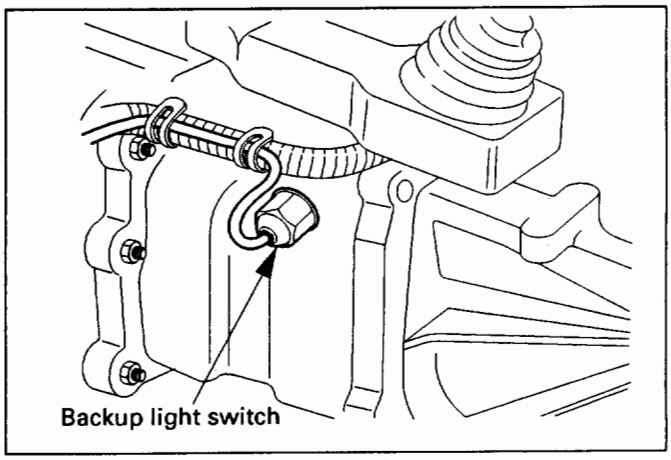

Fig. 8-149

1. **Backup light switch**
   - Remove the connectors.
   - Remove the switch by turning it counter-clockwise.

INSTALLATION

To install, follow the removal steps in the reverse order, noting the following point.

1. **Backup light switch**
   - Apply liquid gasket to the screw portion of the switch to prevent oil leak.

BACKUP LIGHT BULB

REMOVAL (FIG.8-150)

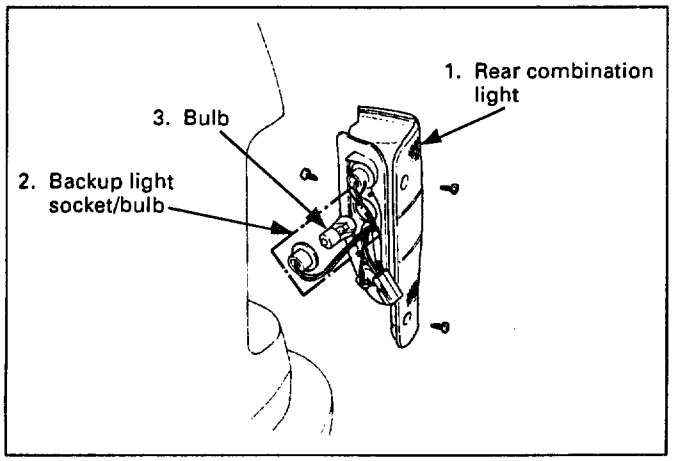

Fig. 8-150

Preparation: Disconnect the battery ground cable.

1. **Rear combination light**
   - Remove three screws and release the lock at two positions.
2. **Backup light socket/bulb**
   - Remove the socket by turning it counter-clockwise.
3. **Bulb**
   - Remove the bulb by turning it counter-clockwise while pushing it at the same time.

INSTALLATION

To install, follow the removal steps in the reverse order.

HORN

REMOVAL

Preparation: Disconnect the battery ground cable.

For low note (Fig.8-151)

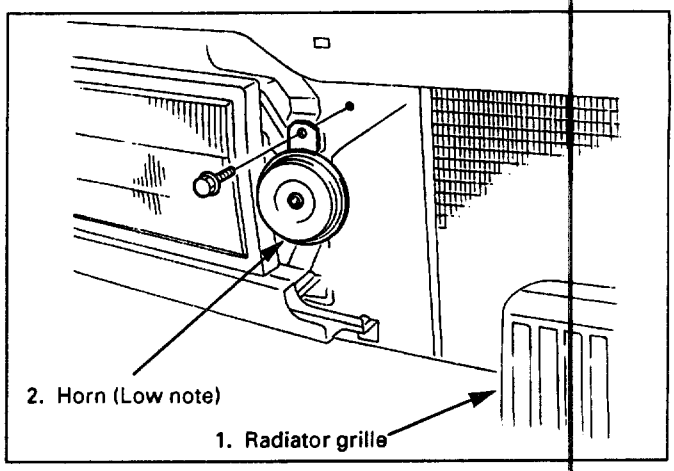

Fig. 8-151

1. **Radiator grille**
   - Remove five clips and two screws.
2. **Horn**
   - Disconnect the connector.
   - Remove the horn mounting bolts.

For high note (Fig.8-152)

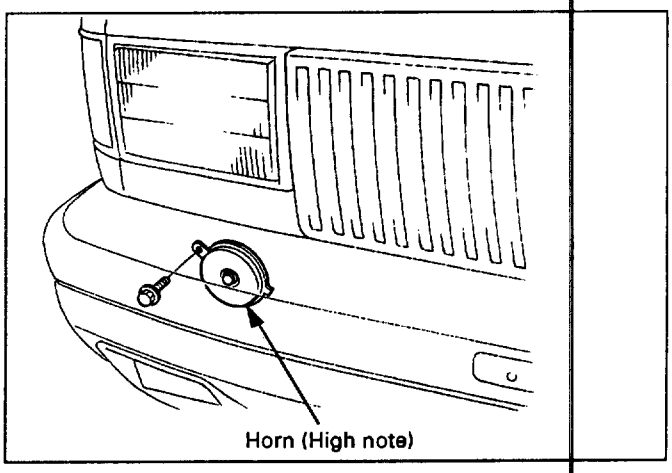

Fig.8-152

1. **Horn**
   - (Without removing the radiator grille) Disconnect the connectors of the horn from the underside of the vehicle.
   - Remove the horn mounting bolts.

INSTALLATION

To install, follow the removal steps in the reverse order, noting the following point.

1. Install the horn for low note at the left and the one for high note at the right.

HORN SWITCH

INSPECTION (FIG. 8-153)

Check the continuity between the connector terminal and the bracket of the switch while operating the horn switch.
Repair or replace the switch when the result of inspection is found abnormal.

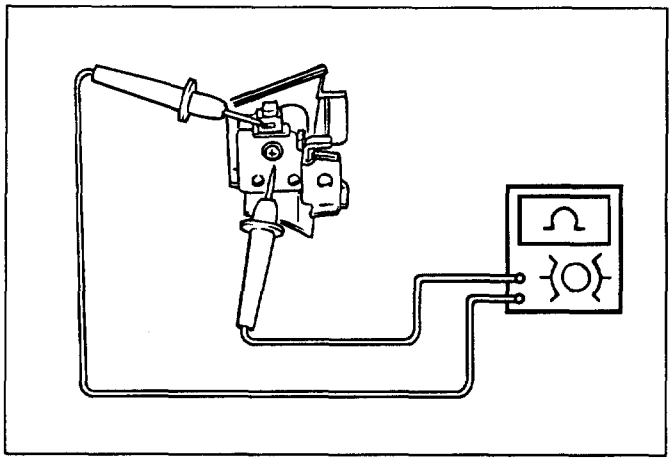

Fig. 8-153

REMOVAL

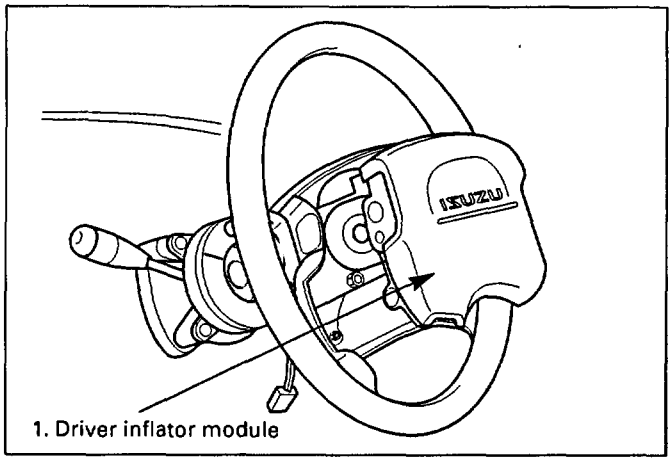

Fig. 8-154

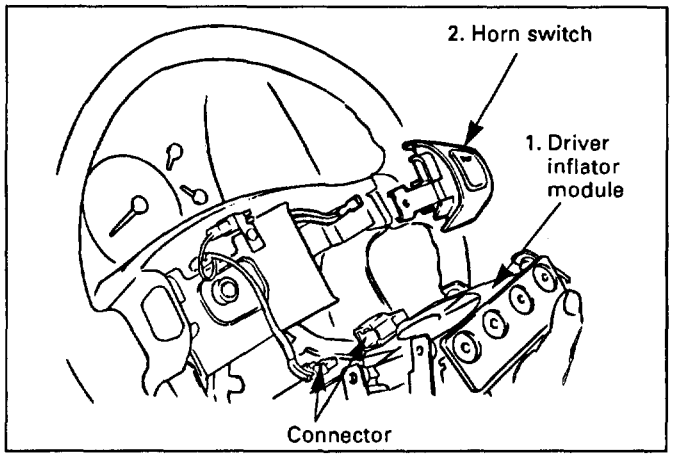

Fig. 8-155

Preparation: Disconnect the battery ground cable.

1. **Driver inflator module (Fig. 8-154)**
   - Disconnect the Supplemental Restraint System (SRS) – AIR BAG connector located at lower of the instrument panel driver lower cover.
   - Remove four screws.
   - Disconnect the inflator module connector.

   CAUTION:
   When carrying a live inflator module, make sure the bag opening is pointed away from you. In case of an accidental deployment, the bag will then deploy with minimal chance of injury. Never carry the inflator module by the wires or connector on the underside of the module.
   When placing a live inflator module on a bench or other surface, always face the bag and trim cover up, away from the surface. This is necessary so that a free space is provided to allow the air bag to expand in the unlikely event of accedental deployment.
2. **Horn switch (Fig. 8-155)**
   - Remove the screws.
   - Disconnect the switch connector.

INSTALLATION

To install, follow the removal steps in the reverse order, noting the following point.

1. When connect the double lock type of inflator module connectors, insert the connector completery and lock at outside. Imperfect locking may cause malfunction of Supplemental Restraint System (SRS) – AIR BAG circuit.

HORN RELAY

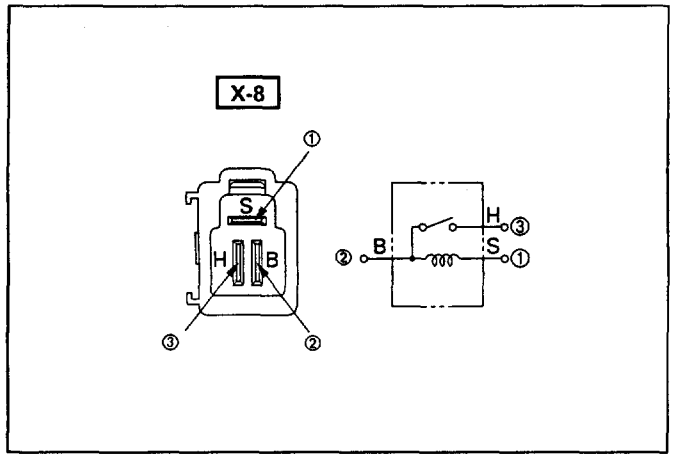

Fig. 8-156

INSPECTION

Check to see if there is any continuity between the relay terminals. (Fig. 8-156)
Replace the relay when the result of inspection is found abnormal.

② – ③	No continuity
(When the battery voltage is applied between ① – ②)	
② – ③	Continuity

CORNERING LIGHT RELAY

INSPECTION

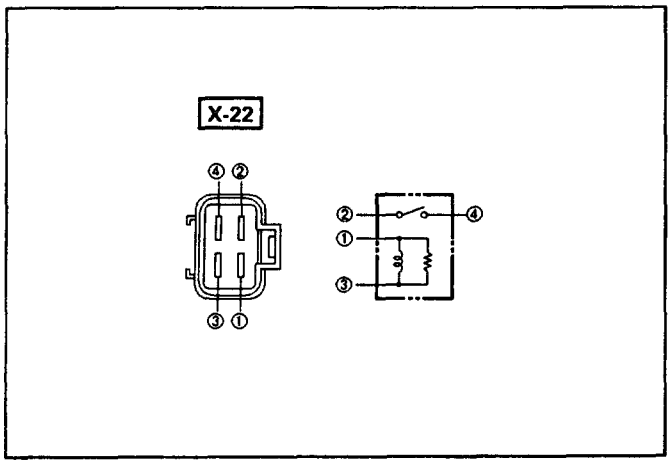

Fig. 8-157

Check to see if there is any continuity between the relay terminals. (Fig. 8-157)
Replace the relay when the result of inspection is found abnormal.

② – ④	No continuity
(When the battery voltage is applied between ① – ③)	
② – ④	Continuity

NOTE:
For the relay removal, refer to "Connector Handling" in the "NOTES FOR WORKING ON ELECTRICAL ITEMS" in this section.

MEMO

DOME LIGHT, LUGGAGE ROOM LIGHT, COURTESY LIGHT, MAP LIGHT, SEAT BELT SWITCH AND WARNING BUZZER

GENERAL DESCRIPTION

This circuit consists of the starter switch, door switch, dome light, luggage room light, courtesy light, map light, seat belt switch, key remind switch and warning buzzer.
The dome light lights up when any one of doors except the tailgate is opened with the switch set at the door mode. (Vehicles with a built-in timer do not have door mode.)
The courtesy lights for the front doors are controlled by a circuit different from the one which controls the courtesy lights for the rear doors. When a door is opened, the lights on both sides in either front or rear seat light up.
The luggage room light illuminates by opening the tailgate when the switch is set at the door mode.
The map light illuminates by turning the switch on.
All these lights light up by turning on respective switches regardless of the position of the starter switch key.
The warning buzzer sounds to remind the driver of seat belt use, leaving the key in the starter switch, or headlights were left on.

OPERATION OF THE CIRCUIT

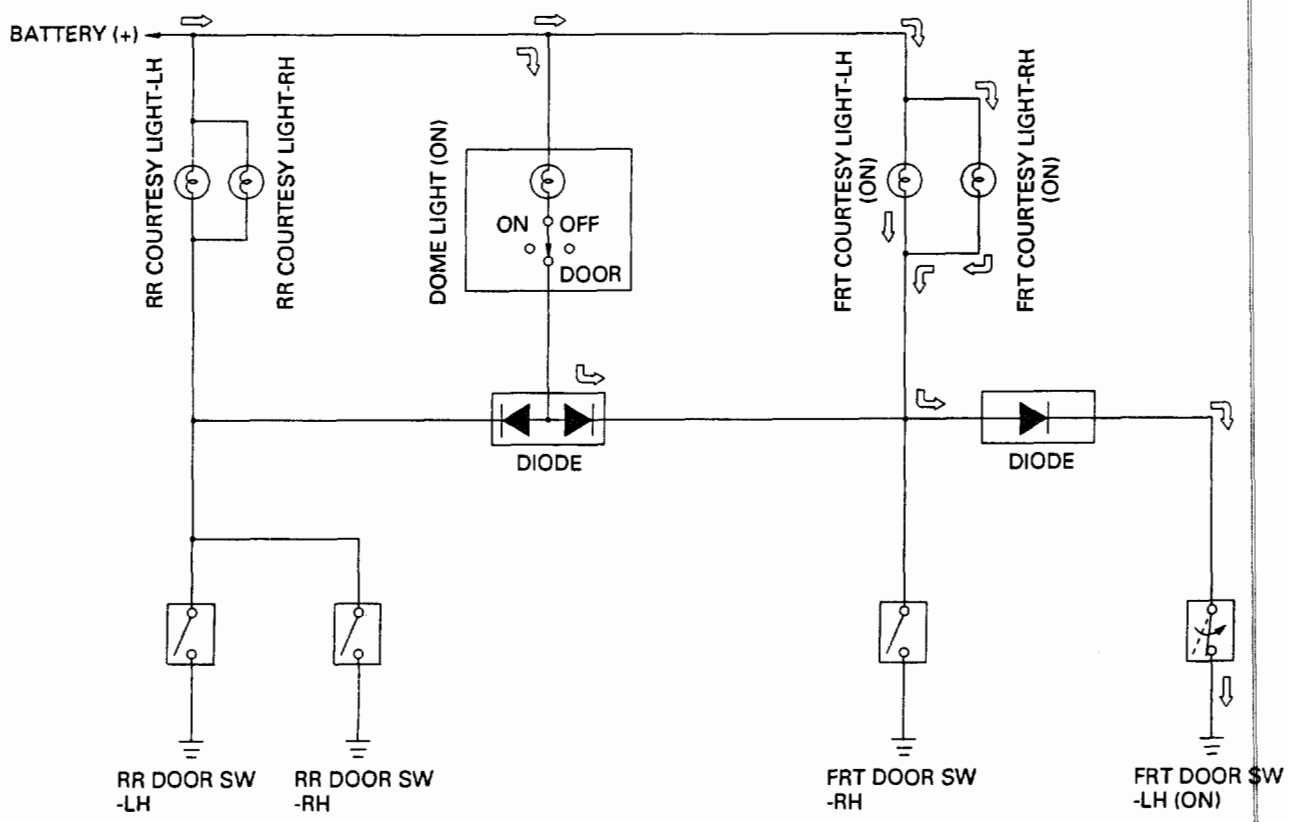

NOTE: Arrow marks " ⇨ " indicate the direction of current

Fig. 8-158

PARTS LOCATION

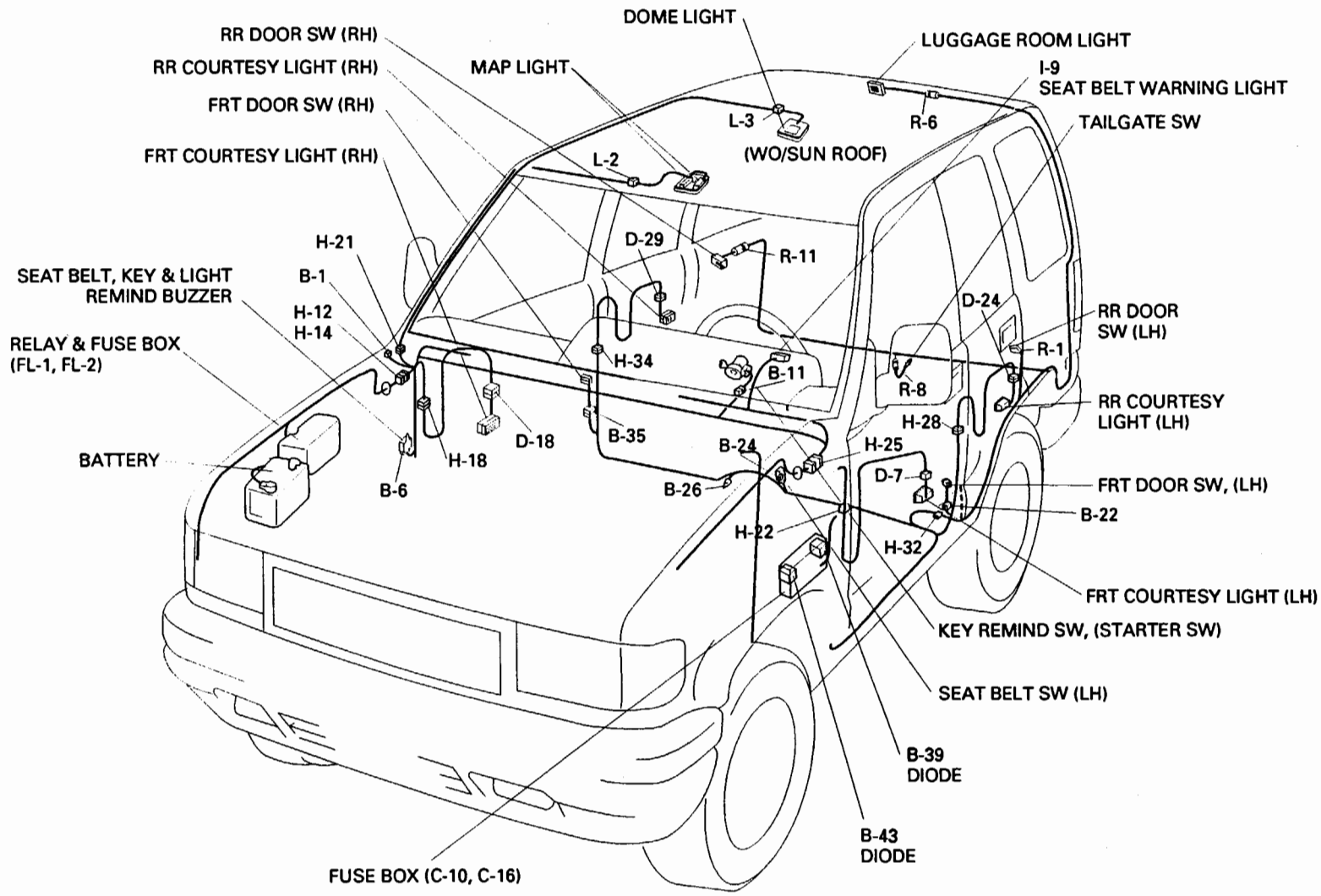

Fig. 8-159

CIRCUIT DIAGRAM - LONG WHEEL BASE

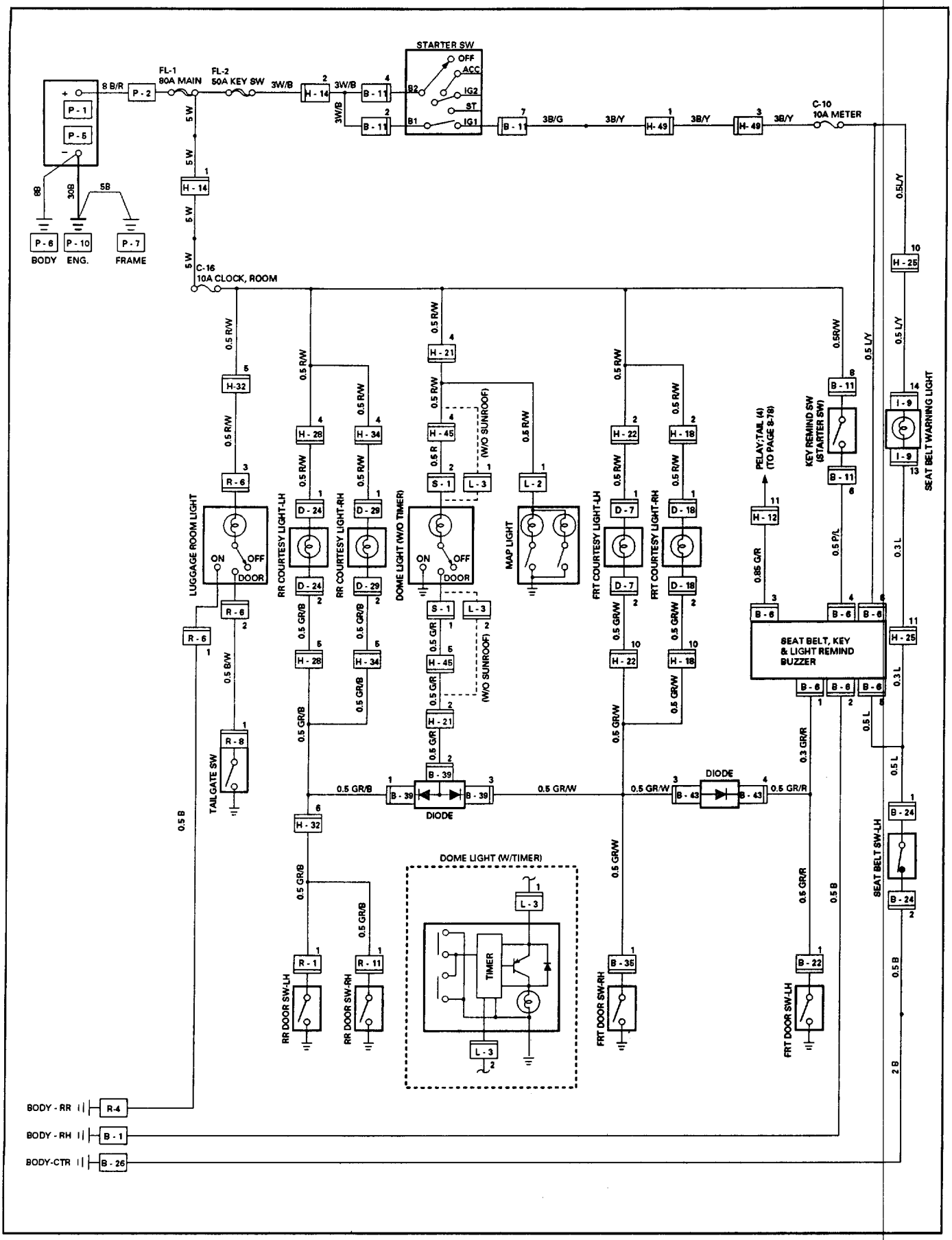

Fig. 8-160

CIRCUIT DIAGRAM - SHORT WHEEL BASE

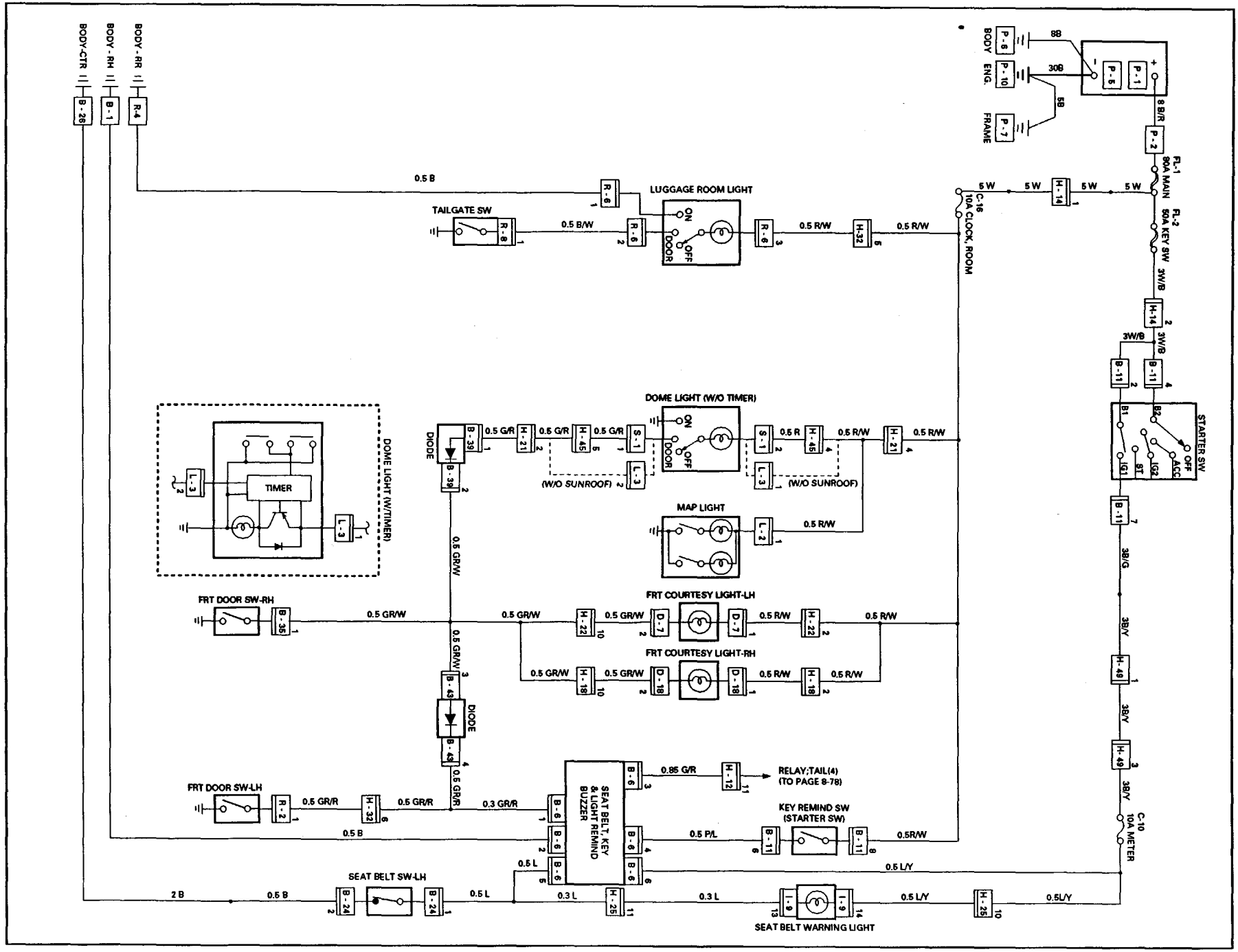

Fig. 8-161

CONNECTOR LIST

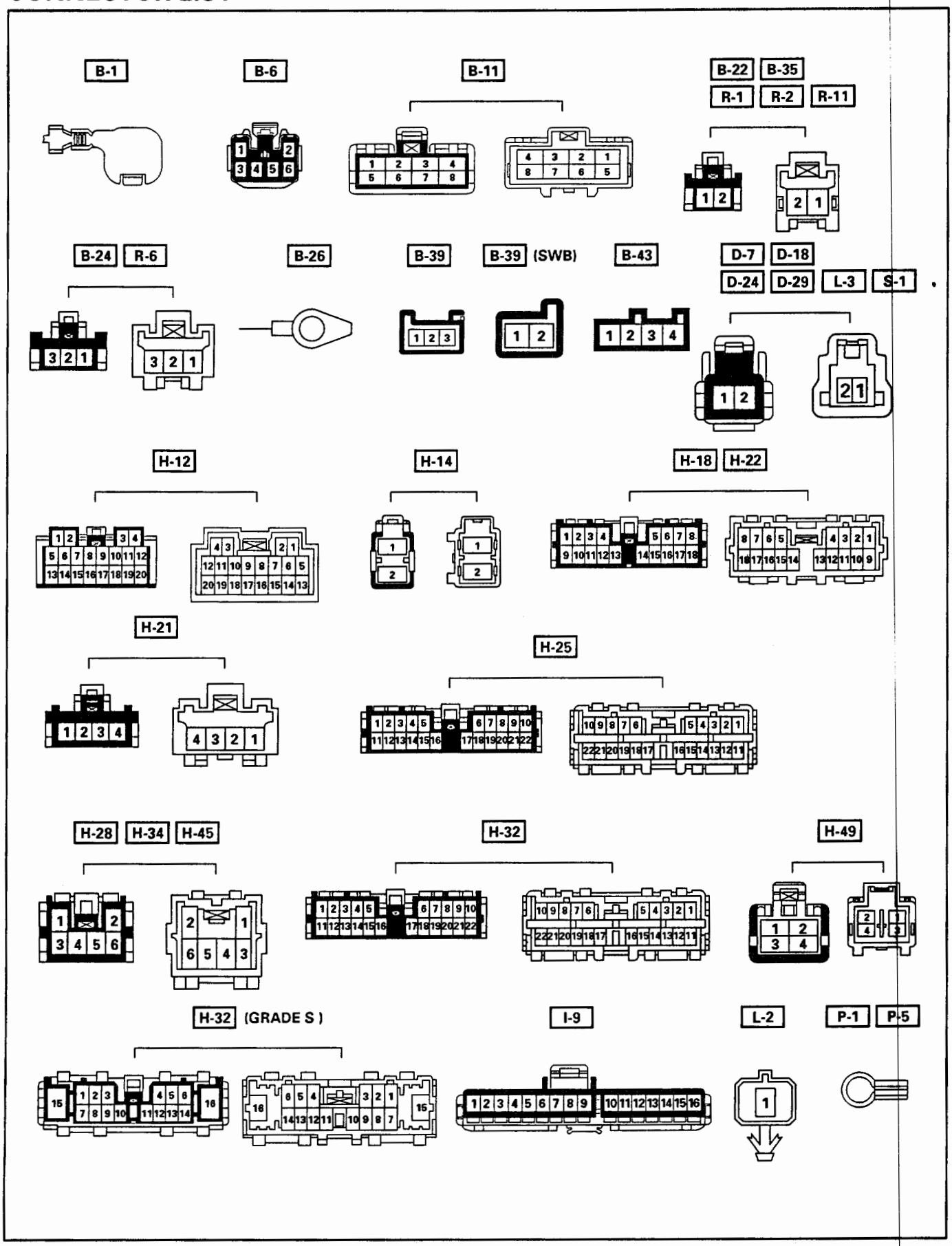

Fig. 8-162

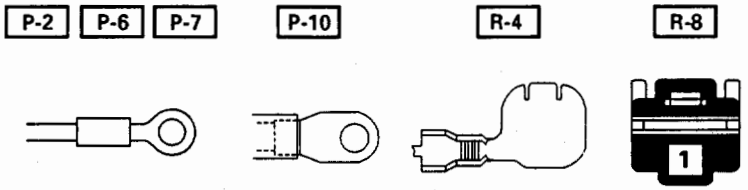

Fig. 8-163

STARTER SWITCH

Refer to "START AND CHARGING" of this section.

DOOR SWITCH

INSPECTION

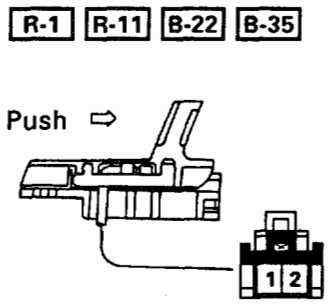

Switch operation \ Connector No. / Terminal	R-1 / R-11 / B-22 / B-35	
	1	Body
Push		
Release	○	○

Fig. 8-164

Check to see if there is any continuity between the terminals and the body while operating the door switch. (Fig. 8-164)
Repair or replace the switch, when the result of inspection is found abnormal.

REMOVAL (FIG. 8-165)

Preparation: Disconnect the battery ground cable.

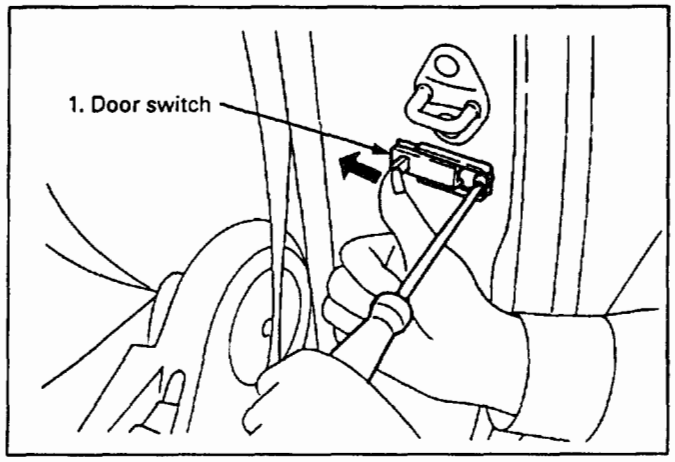

Fig. 8-165

1. **Door switch**
   - Remove the screw.
   - Disconnect the connector of the switch.

INSTALLATION

To install, follow the removal steps in the reverse order.

TAILGATE SWITCH

INSPECTION

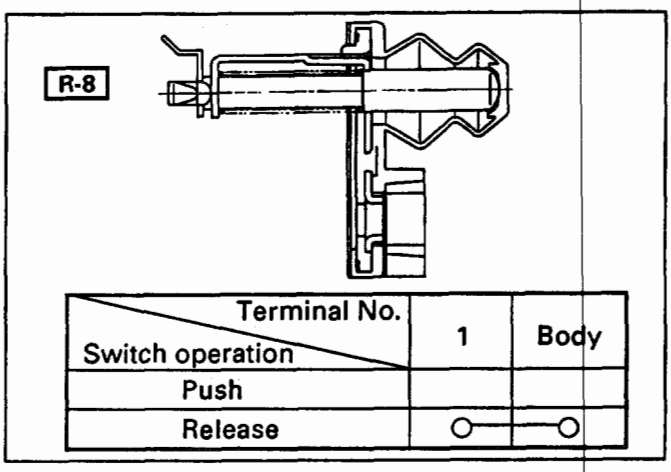

Switch operation \ Terminal No.	1	Body
Push		
Release	○	○

Fig. 8-166

Check to see if there is any continuity between the terminals and the body while operating the tailgate switch. (Fig. 8-166)
Repair or replace the tailgate switch when the result of inspection is found abnormal.

REMOVAL (FIG. 8-167)

Preparation: Disconnect the battery ground cable.

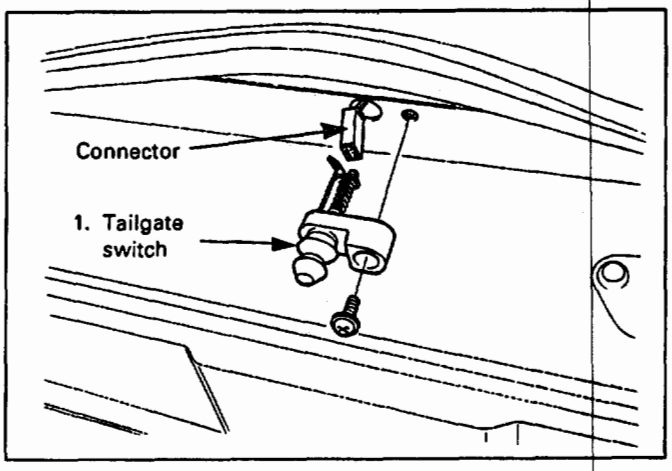

Fig. 8-167

1. **Tailgate switch**
   - Remove the screws.
   - Disconnect the connector of the switch.

INSTALLATION

To install, follow the removal steps in the reverse order.

DOME LIGHT BULB

REMOVAL (FIG. 8-168)

Preparation: Disconnect the battery ground cable.

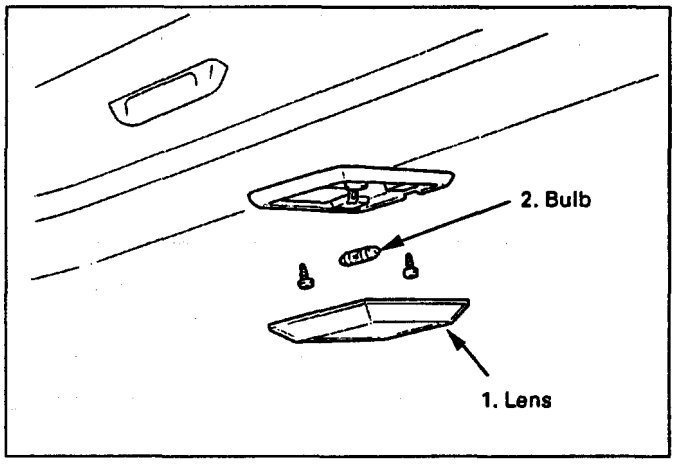

Fig. 8-168

1. **Lens**
   - Remove the lens by releasing the locks at three locations.
2. **Bulb**

INSTALLATION

To install, follow the removal steps in the reverse order.

LUGGAGE ROOM LIGHT BULB

REMOVAL (FIG. 8-169)

Preparation: Disconnect the battery ground cable.

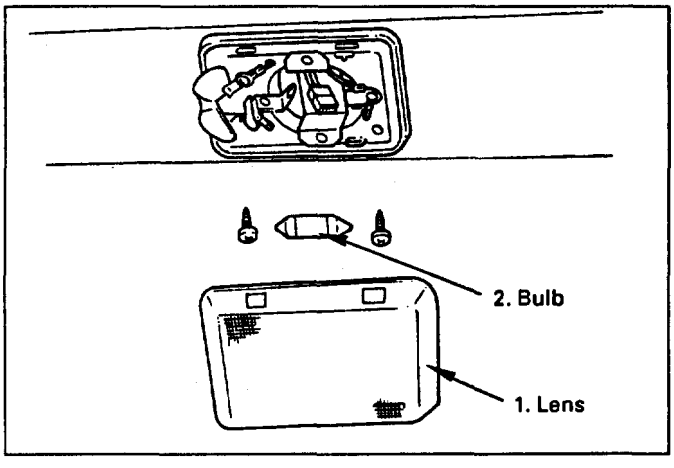

Fig. 8-169

1. **Lens**
   - Remove the lens by releasing the locks at four locations.
2. **Bulb**

INSTALLATION

To install, follow the removal steps in the reverse order.

COURTESY LIGHT BULB

REMOVAL (FIG. 8-170)

Preparation: Disconnect the battery ground cable.

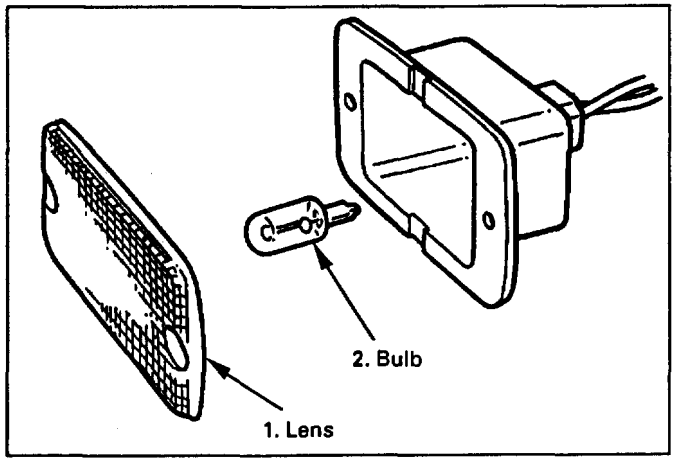

Fig. 8-170

1. **Lens**
   - Remove two screws.
2. **Bulb**
   - Pull out the bulb from the socket.

INSTALLATION

To install, follow the removal steps in the reverse order.

MAP LIGHT SWITCH/BULB

INSPECTION

Check to see if there is any continuity between the terminals and the body while operating the map light switch.(Fig.8-171)
Repair or replace the switch when the result of inspection is found abnormal.

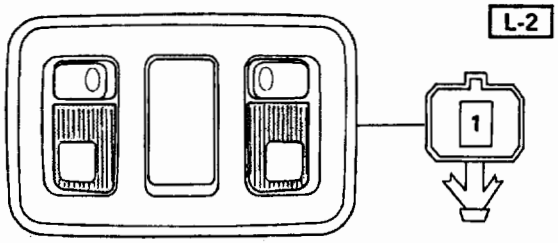

Switch operation \ Terminal No.	1	Body
ON	○	○
OFF		

Fig. 8-171

REMOVAL

Preparation: Disconnect the battery ground cable.

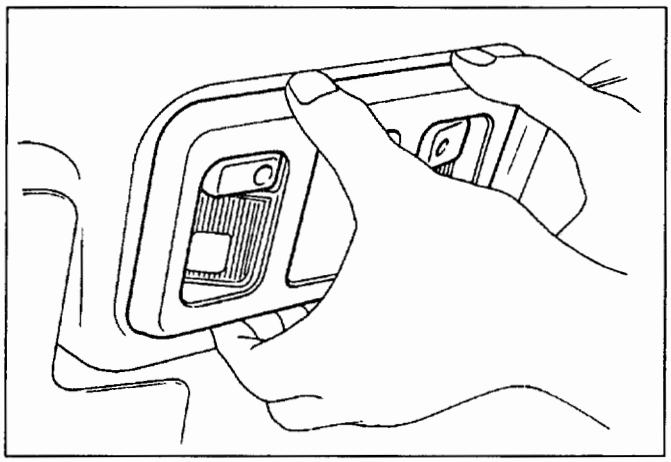

Fig. 8-172

1. **Map light switch**
   - Pull the map light body downward to release the lock. (Fig. 8-172)
   - Disconnect the connectors of the map light and the sun roof switch.
2. **Socket/bulb**
   - Turn the socket counterclockwise to remove it.
3. **Bulb**
   - Pull out the bulb from the socket.

INSTALLATION

To install, follow the removal steps in the reverse order.

SEAT BELT SWITCH

INSPECTION

Check to see if there is any continuity between the terminals of the seat belt switch. (Fig. 8-173)
Replace the switch when the result of inspection is found abnormal.

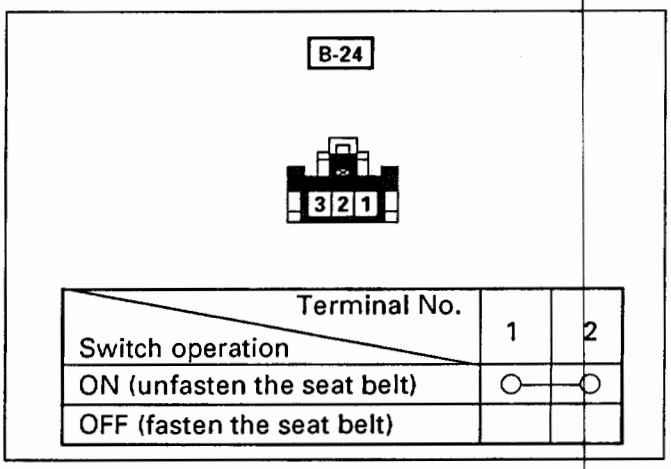

Switch operation \ Terminal No.	1	2
ON (unfasten the seat belt)	○	○
OFF (fasten the seat belt)		

Fig. 8-173

REMOVAL AND INSTALLATION

Refer to Section 10 "BODY", for "SEAT BELT" removal and installation steps.

WARNING BUZZER

The warning buzzer sounds to remind the driver to fasten seat belts, if the key was left in the starter switch, or if the headlights were left on. (Fig.8-174)

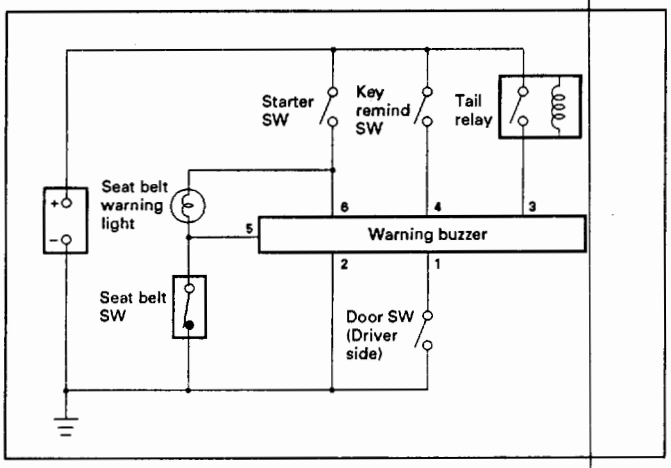

Fig. 8-174

Warning function	Operational conditions
Fasten the seat belt	The warning light in the meter assembly turned on about 6 seconds from the moment the starter switch is turned on.
	The buzzer sounds for about 6 seconds when the starter switch is turned on with the seat belt switch on (when the seat belt is not used).
Key left in starter switch	The buzzer sounds when both the key remind switch and the FRT door switch –LH are turned on. To stop the sound of the buzzer, turn on the starter switch.
Taillights left on	The buzzer sounds when the starter switch is turned from the "on" to "off" position while the taillights are on.

INSPECTION

Inspection of the warning buzzer circuit

1. Remove the warning buzzer connector to measure the continuity and voltage between the harness side connector terminals. (Fig. 8-175)

Harness side

Terminal	Wire color	Connected to	Item to be checked	Connecting terminal	Checking conditions		Standard
5	L	Seat belt SW	Continuity	5-Ground	Seat belt	When unfastened	Continuity
						When fastened	No continuity
3	G/R	Tail relay	Voltage	3-Ground	Lighting switch ON		Approx. 12V
4	P/L	Key reminder SW (Starter SW)		4-Ground	Starter key	inserted	Approx. 12V
						removed	0V
6	L/Y	Fuse C-10 (10A)		6-Ground	Starter switch ON		Approx. 12V
1	GR/R	Door switch (on driver's seat side)	Continuity	1-Ground	FRT door- LH	open	Continuity
						closed	No continuity
2	B	Ground		2-Ground	—		Continuity

Fig. 8-175

REMOVAL (FIG. 8-176)

Preparation: Disconnect the battery ground cable.

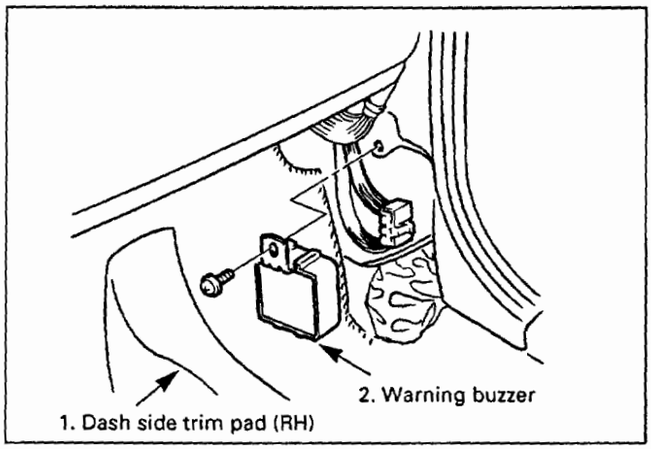

Fig. 8-176

1. **Dash side trim pad (RH)**
2. **Warning buzzer**
   (Peel off butyl seal to reach buzzer)
   - Remove the fixing bolt.
   - Disconnect the connector.

INSTALLATION

To install, follow the removal steps in the reverse order.

KEY REMIND SWITCH (STARTER SWITCH)

INSPECTION

Check to see if there is any continuity between the connector terminals of the key remind switch. (Fig. 8-177) Repair or replace the switch when the result of inspection is found abnormal.

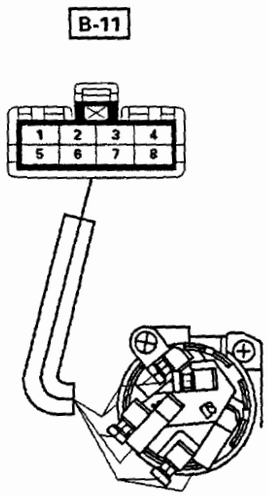

Starter key position \ Terminal No.		6	8
LOCK	Key removed		
OFF	Key inserted	○	○
ACC			
ON			
START			

Fig. 8-177

REMOVAL AND INSTALLATION

Refer to "START AND CHARGING" in this section for starter switch removal and installation steps.

DIODE

INSPECTION

There should be continuity in either A or B when a circuit tester is connected with diode terminal. (Fig. 8-178, Fig. 8-179)
Replace the diode when the result of inspection is found abnormal.

B-39 (For short wheel base)
B-43

Terminal No.		4	3
Connection pattern	A	(+)	(−)
	B	(−)	(+)

Fig. 8-178

B-39 (For long wheel base)

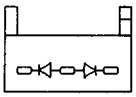

Terminal No.		3	2	1
Connection pattern	A	(−)	(+)	
			(+)	(−)
	B	(+)	(−)	
			(−)	(+)

Fig. 8-179

REMOVAL (FIG. 8-180)

Preparation: Disconnect the battery ground cable.

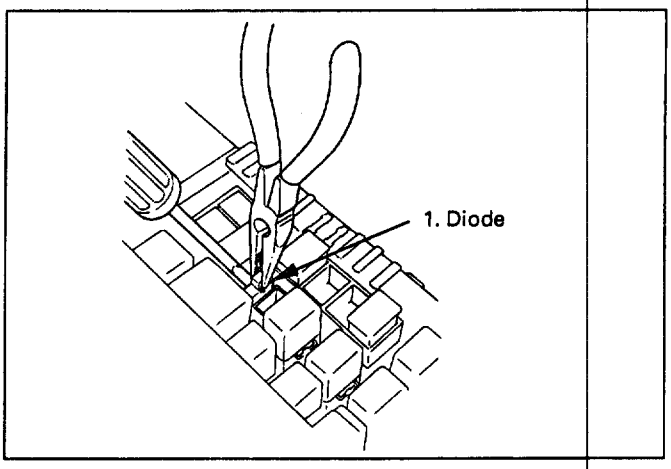

Fig. 8-180

1. **Diode**
   - Insert a thin screwdriver between the lock rib side of the diode and the connector housing to remove it.

MEMO

POWER DOOR LOCK

GENERAL DESCRIPTION

The circuit consists of the door lock (& power window) switch, door lock actuator for the front and rear door, tailgate lock actuator and the door lock key switch.
The front door lock switch-LH is always provided with battery voltage. The key or the inside lock button on the both driver's and the front passenger's door can activate the lock mechanism of all the doors (including the tailgate).
When the driver's door lock switch or the front passenger's door lock switch is turned on, current flows for about one second to the door lock actuator of each door connected in parallel with the front door lock (& power window) switch-LH to activate the actuator to lock and unlock the doors.

OPERATION OF DOOR LOCK BY DRIVER SIDE LOCK KEY SWITCH

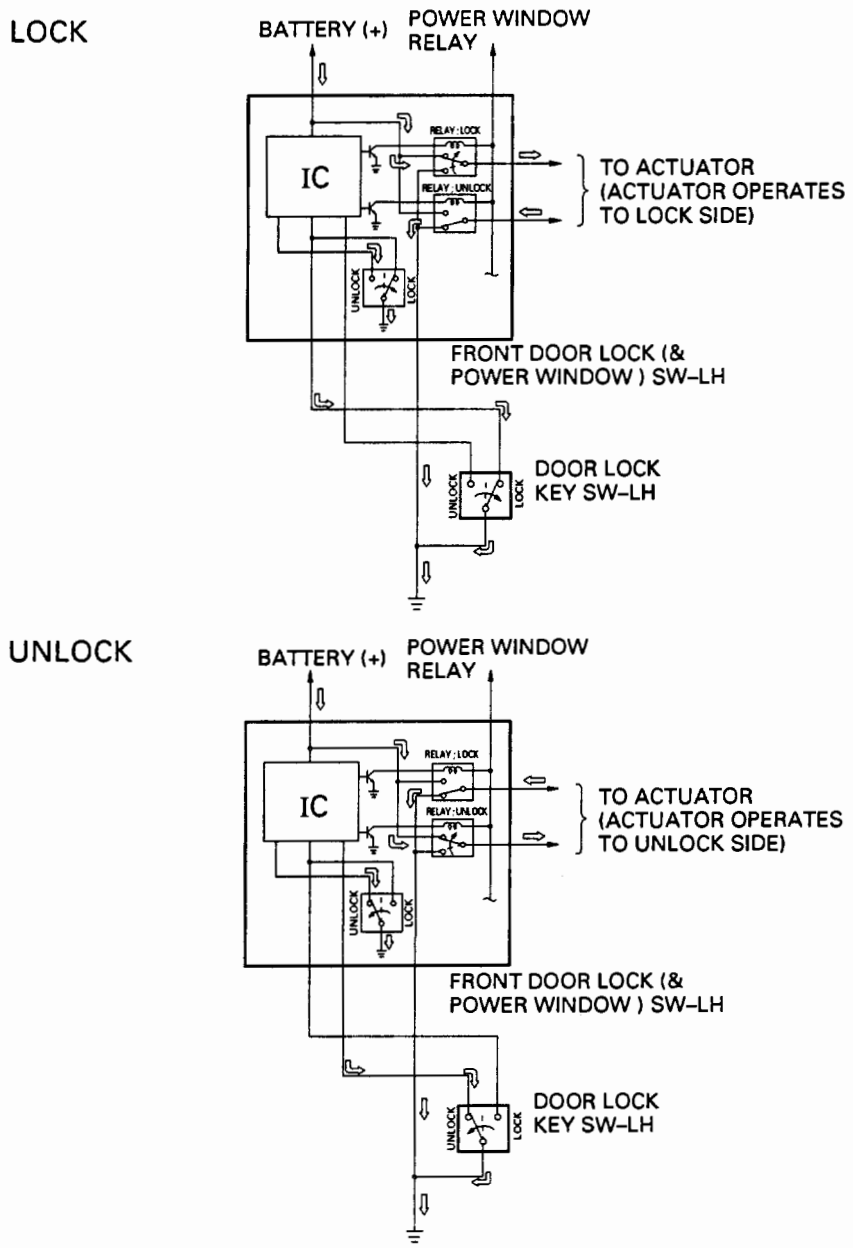

NOTE: Arrow marks " ⇨ " indicate the direction of current.

Fig. 8-181

PARTS LOCATION

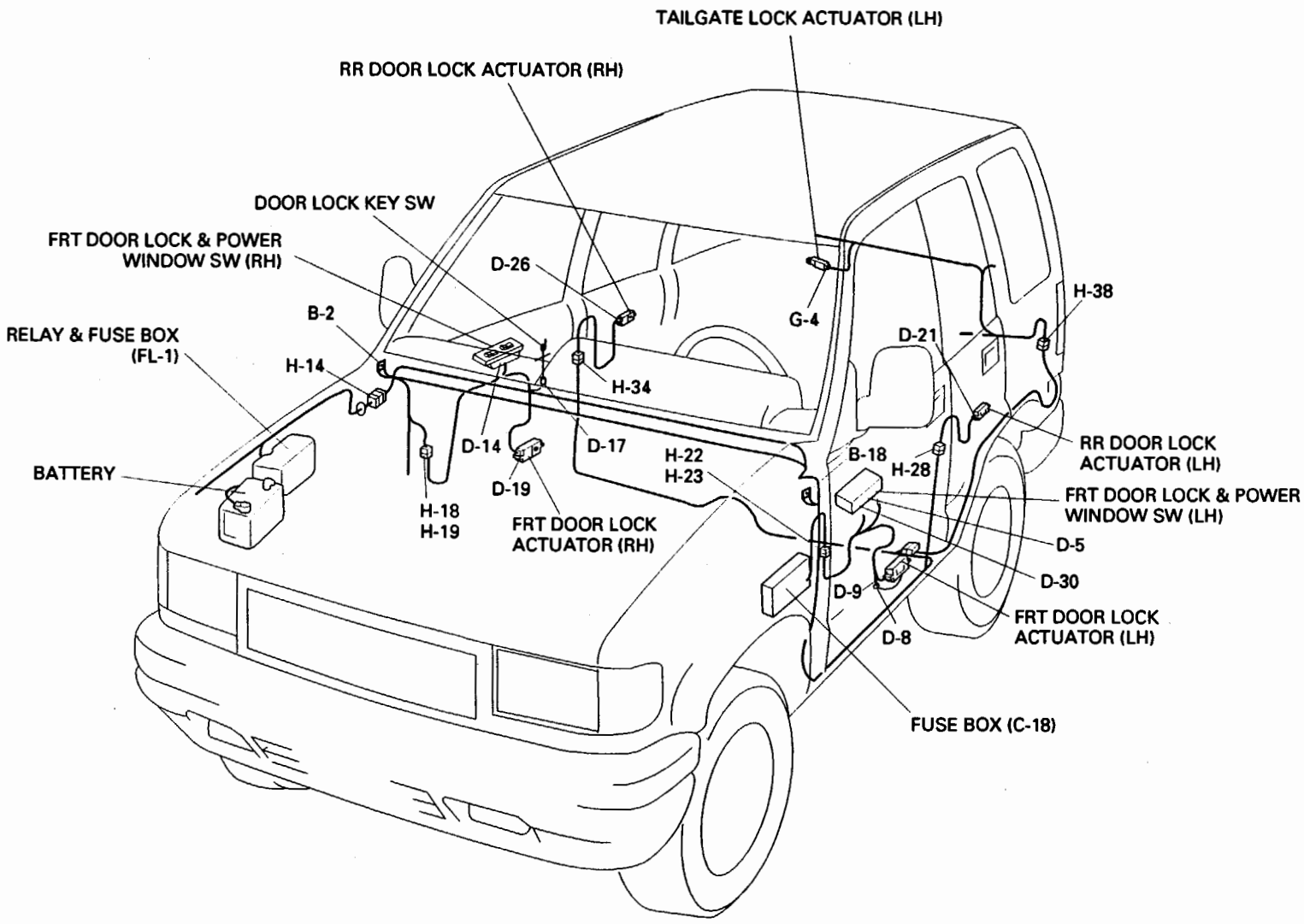

Fig. 8-182

CIRCUIT DIAGRAM

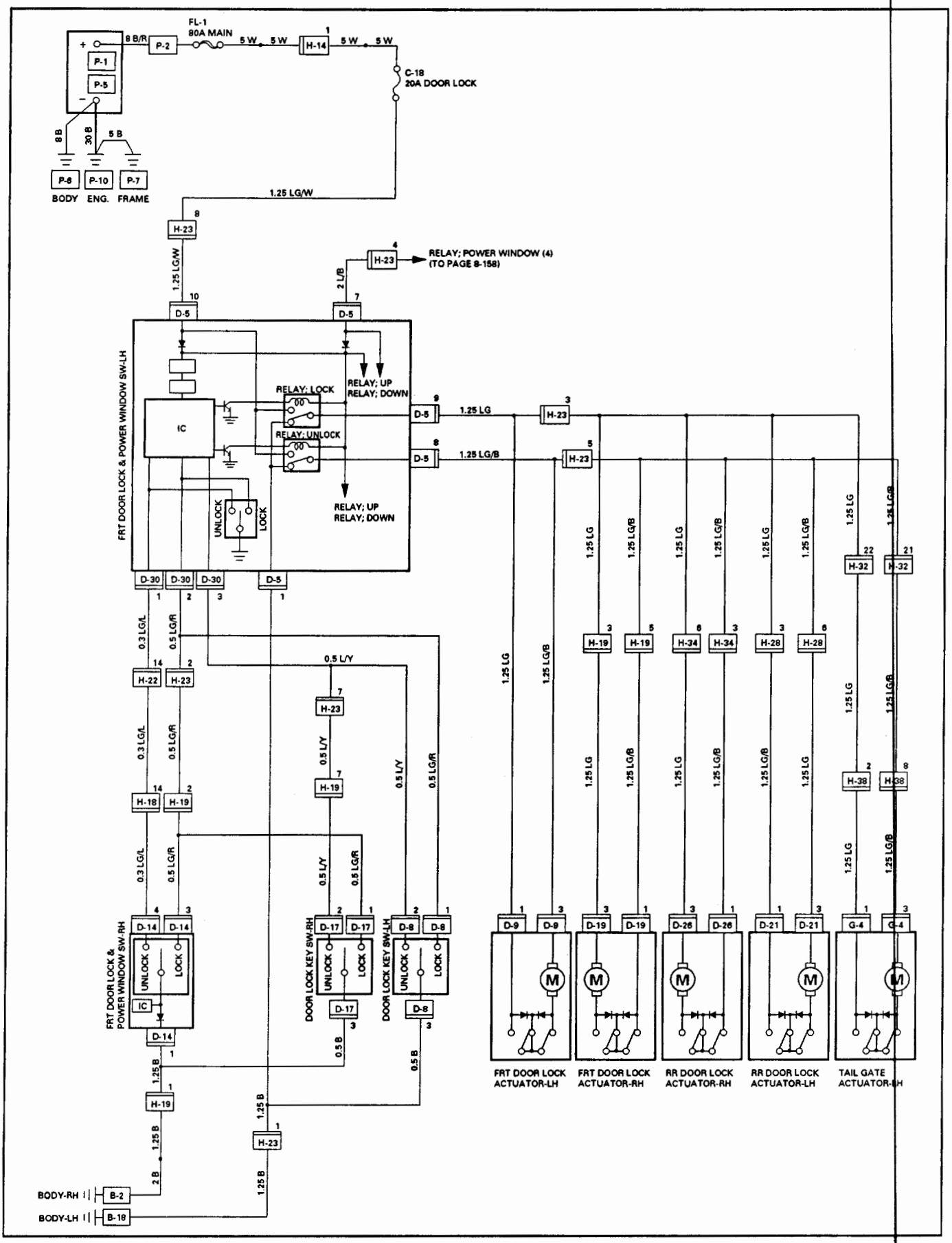

Fig. 8-183

CONNECTOR LIST

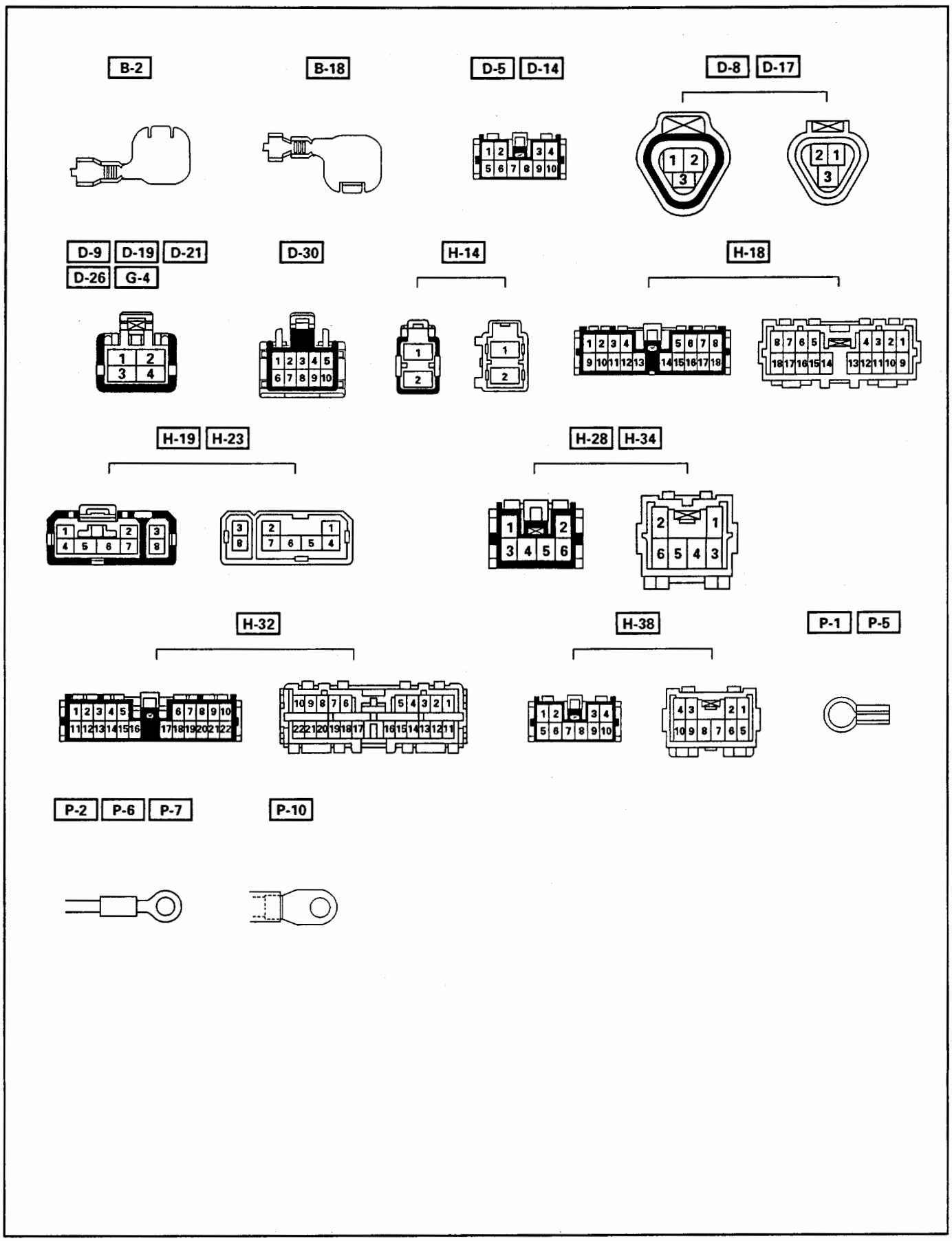

Fig. 8-184

DIAGNOSIS

QUICK CHART FOR CHECK POINTS

Check point / Trouble mode	Fuse (C-18 20A)	FRT Door lock (& power window) SW-LH	FRT Door lock (& power window) SW-RH	Door lock key switch FRT-LH	Door lock key switch FRT-RH	Door lock actuator					Cable harness
						FRT-LH	FRT-RH	RR-LH	RR-RH	Tailgate	
1. All the doors do not lock and unlock by door lock SW-LH	○ (1)	○ (3)									○ (2)
2. All the doors do not get locked (or unlocked) by FRT door lock SW-RH		○ (1)	○ (2)								○ (3)
3. FRT door-LH does not get locked (or unlocked)						○ (1)					○ (2)
4. FRT door-RH does not get locked (or unlocked)							○ (1)				○ (2)
5. RR door-LH does not get locked (or unlocked)								○ (1)			○ (2)
6. RR door-RH does not get locked (or unlocked)									○ (1)		○ (2)
7. Tailgate does not get locked (or unlocked)										○ (1)	○ (2)
8. Door lock does not operate when operated from the door lock key SW-LH		○ (1)		○ (3)							○ (2)
9. Door lock does not operate when operated from the door lock key SW-RH		○ (1)			○ (3)						○ (2)

Note: Figure in parenthesis "( )" indicates the order of inspection.

1. ALL THE DOORS DO NOT LOCK AND UNLOCK BY DOOR LOCK SW-LH

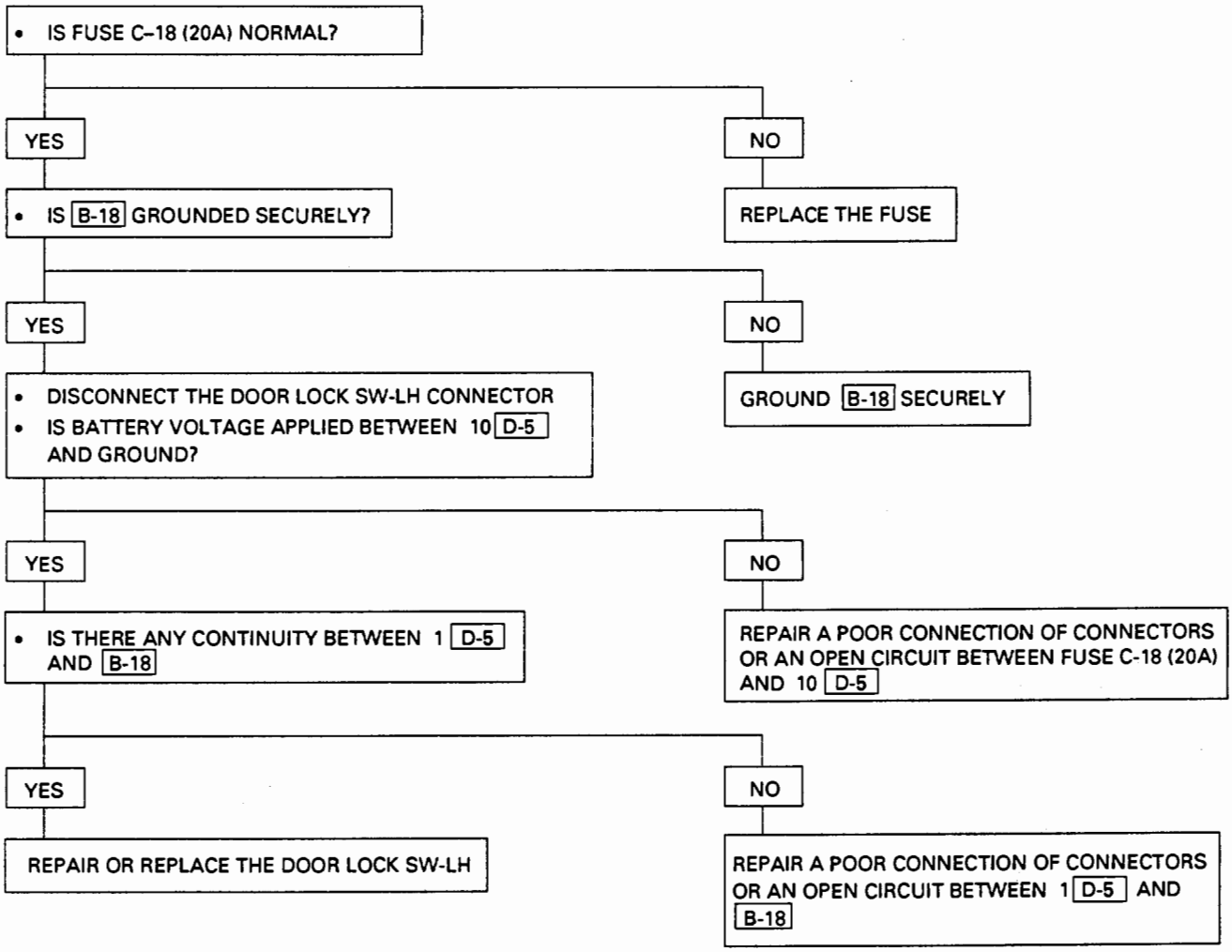

2. ALL THE DOORS DO NOT GET LOCKED (OR UNLOCKED) BY FRT DOOR LOCK SW-RH

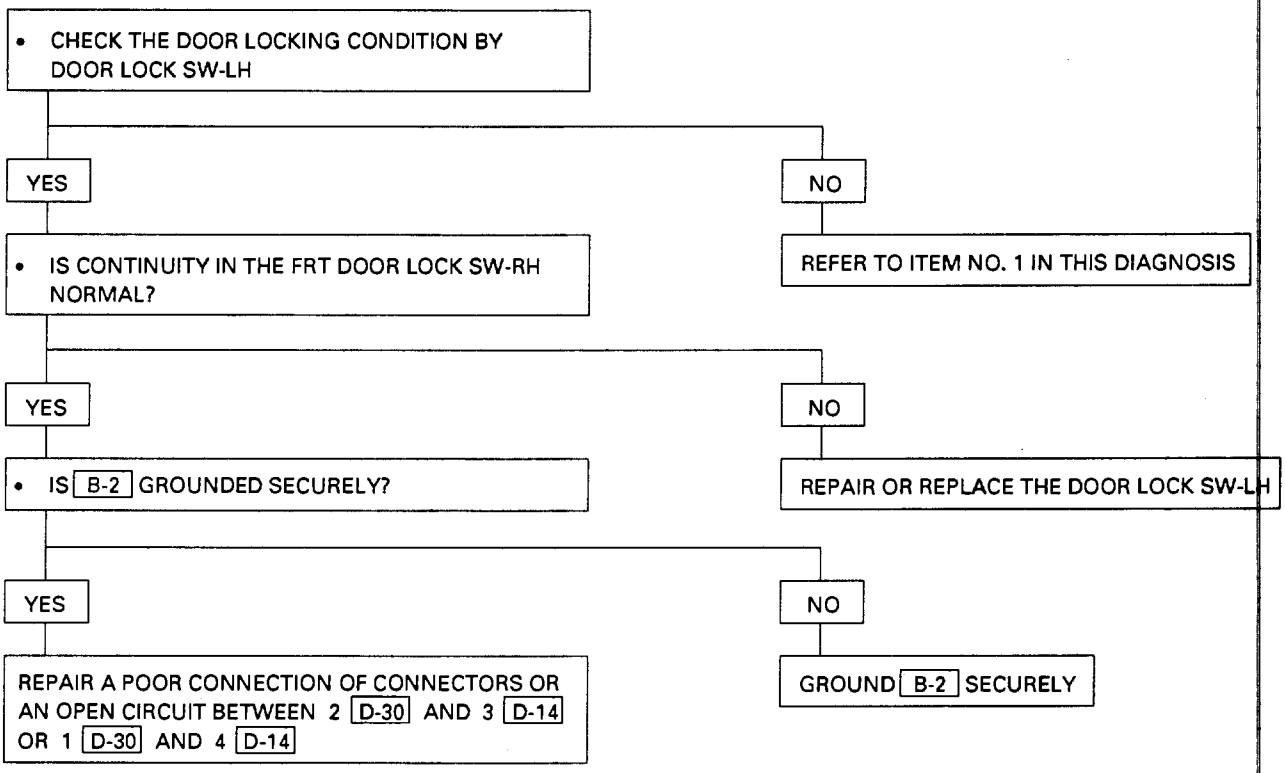

3. FRT DOOR–LH DOES NOT GET LOCKED (OR UNLOCKED)
4. FRT DOOR–RH DOES NOT GET LOCKED (OR UNLOCKED)
5. RR DOOR–LH DOES NOT GET LOCKED (OR UNLOCKED)
6. RR DOOR–RH DOES NOT GET LOCKED (OR UNLOCKED)
7. TAILGATE DOES NOT GET LOCKED (OR UNLOCKED)

REPLACE THE DOOR LOCK ACTUATOR

8. DOOR LOCK DOES NOT OPERATE WHEN OPERATED FROM THE DOOR LOCK KEY SW-LH

- CHECK THE DOOR LOCKING CONDITION OPERATED BY DOOR LOCK SW-LH

YES

- DISCONNECT THE DOOR LOCK KEY SW-LH CONNECTOR
- IS BATTERY VOLTAGE APPLIED BETWEEN 1 [D-8] OR 2 [D-8] AND GROUND?

NO

REFER TO ITEM 1 IN THIS DIAGNOSIS

YES

- IS CONTINUITY IN THE DOOR LOCK KEY SW-LH NORMAL?

NO

REPAIR A POOR CONNECTION OF CONNECTORS OR AN OPEN CIRCUIT BETWEEN 1 [D-8] AND 2 [D-30] OR 2 [D-8] AND 3 [D-30]

YES

REPAIR A POOR CONNECTION OF CONNECTORS OR AN OPEN CIRCUIT BETWEEN 3 [D-8] AND [B-18]

NO

REPAIR OR REPLACE THE DOOR LOCK KEY SW-LH

9. DOOR LOCK DOES NOT OPERATE WHEN OPERATED FROM THE FRONT DOOR LOCK KEY SW-RH

- CHECK THE DOOR LOCKING CONDITION OPERATED BY DOOR LOCK SW-LH

YES

- DISCONNECT THE DOOR LOCK KEY SW-RH CONNECTOR
- IS BATTERY VOLTAGE APPLIED BETWEEN 1 [D-17] OR 2 [D-17] AND GROUND?

YES

- IS CONTINUITY IN THE DOOR LOCK KEY SW-RH NORMAL?

YES

REPAIR A POOR CONNECTION OF CONNECTORS OR AN OPEN CIRCUIT BETWEEN 3 [D-17] AND [B-2]

NO

REPAIR OR REPLACE THE DOOR LOCK KEY SW-RH

NO

REPAIR A POOR CONNECTION OF CONNECTORS OR AN OPEN CIRCUIT BETWEEN 1 [D-17] AND 2 [D-30] OR 2 [D-17] AND 3 [D-30]

NO

REFER TO ITEM 1 IN THIS DIAGNOSIS

INSPECTION OF THE DOOR LOCK CIRCUIT

Check the voltage and the continuity between the front door lock (& power window) switch harness side connector terminals. (Fig. 8-185)

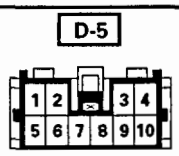

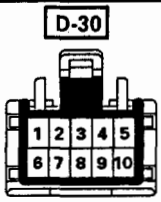

Connector No.	Terminal No.	Wire color	Connected to	Item to be checked	Connecting terminal	Checking conditions		Standard
D-5	1	B	Ground	Continuity	1-Ground	–		Continuity
	7	L/B	Power window relay	Voltage	7-Ground	Starter SW "ON"		Approx. 12V
	8	LG/B	Lock actuator (Unlock)	Continuity	8-9	–		Continuity (There is some resistance)
	9	LG	Lock actuator (Lock)		9-8	–		
	10	LG/W	Fuse C-18 (20A)	Voltage	10-Ground	–		Approx. 12V
D-30	1	LG/L	Door lock SW-RH (Unlock)	Continuity	1-Ground	Door lock SW	Unlock	Continuity
							Lock	No continuity
	2	LG/R	Door lock SW-RH (Lock) Door lock key SW-LH & RH (Lock)		2-Ground	Door lock SW-RH or door lock key SW-LH & RH	Lock	Continuity
							Unlock	No continuity
	3	L/Y	Door lock key SW-LH & RH (Unlock)		3-Ground	Door lock key SW-LH & RH	Unlock	Continuity
							Lock	No continuity

Fig 8-185

FRONT DOOR LOCK (& POWER WINDOW) SWITCH-LH

The front door lock (& power window) switch sends out to each door lock actuator the lock/unlock signals received from both door lock switch and door lock key switch.

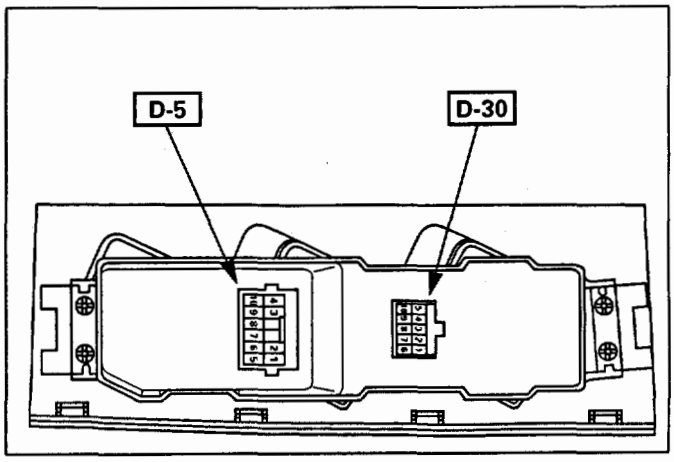

Fig 8-186

INSPECTION

Remove the connectors of the front door lock (& power window) switch, and check the continuity and the voltage between the switch side connector terminals. (Fig. 8-186)
(Connect the (+) terminal of the battery to 10 [D-5] and the (–) terminal to 1 [D-5])

1 [D-5] – 9 [D-5] .....Continuity
1 [D-5] – 8 [D-5] .....Continuity

(Then, ground 2 [D-30] .)
9 [D-5] .....Current flow for approx. 1 second.

(Disconnect the ground of 2 [D-30] , and ground 1 [D-30])
8 [D-5] .....Current flow for approx. 1 second.

Replace the controller when the result of inspection is found abnormal.

DOOR LOCK OPERATION TEST

After confirming that there is continuity between the harness side connector terminals 8 [D-5] and 9 [D-5] of the front door lock switch-LH, apply battery voltage to each of the terminals to conduct the operation test. (Fig. 8-187) When the door lock will not operate, check the door lock actuator for any trouble.

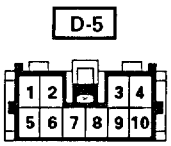

Harness side

Connecting terminal		Operation
8 (LG/B)	9 (LG)	
(+)	(–)	Unlock
(–)	(+)	Lock

Fig. 8-187

REMOVAL AND INSTALLATION

Refer to the removal and installation steps of the POWER WINDOW SWITCH (DRIVER SIDE) in POWER WINDOW in this section.

DOOR LOCK (& POWER WINDOW) SWITCH-RH

The door lock switch on the front passenger's door sends out the lock/unlock signals to the front door lock (& power window) switch-LH. (Fig. 8-188)

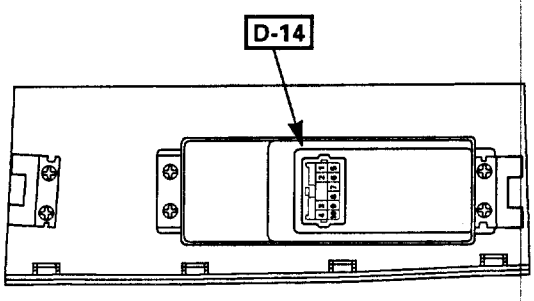

Fig. 8-188

INSPECTION

Check to see if there is any continuity between the connector terminals of the front door lock (& power window) switch-RH. (Fig. 8-189)
Replace the switch when the result of inspection is found abnormal.

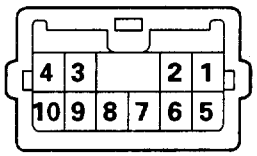

Terminal No. / SW position	1	3	4
Lock	○	○	
Unlock	○		○

Fig. 8-189

REMOVAL AND INSTALLATION

Refer to the removal and installation steps of the POWER WINDOW SWITCH (PASSENGER SIDE) in POWER WINDOW in this section.

DOOR LOCK KEY SWITCH

INSPECTION

Check to see if there is any continuity between the connector terminals of the door lock key switch. (Fig. 8-190)
Replace the switch when the result of inspection is found abnormal.

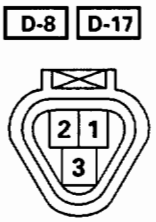

SW position \ Terminal No.	1	2	3
Lock	○	—	○
Unlock		○	○

Fig. 8-190

REMOVAL AND INSTALLATION

Refer to the removal and installation steps of the DOOR LOCK ASSEMBLY in section 10.

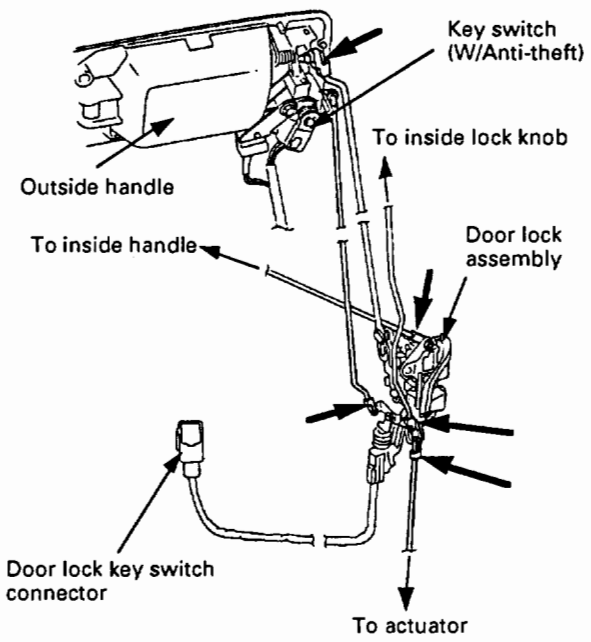

Fig. 8-191

DOOR LOCK ACTUATOR (FOR ALL DOORS INCLUDING TAILGATE)

Receiving the forward or reverse current from the front door lock (& power window) switch-LH, the door lock actuator locks or unlocks the door with the rod connected to the door lock mechanism. (Fig. 8-192)

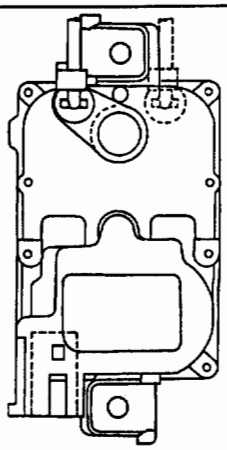

Fig. 8-192

INSPECTION OF THE DOOR LOCK ACTUATOR

Apply the battery voltage to the connector terminals of the door lock actuator to check the operation. (Fig. 8-193)
When the door lock actuator is checked on the vehicle and there is no continuity, and when the door lock actuator itself is checked and no trouble is found, check the circuit between the door lock actuator and the front door lock (& power window) switch-LH for any failure.

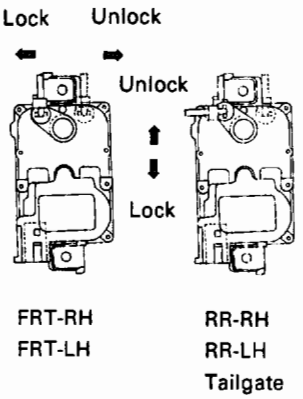

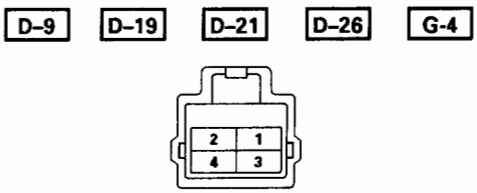

Door	FRT-LH		FRT-RH		RR-LH		RR-RH		Tailgate	
Connector No.	D-9		D-19		D-21		D-26		G-4	
Operation / Terminal No.	1	3	1	3	1	3	1	3	1	3
Lock	⊕	⊖	⊖	⊕	⊕	⊖	⊖	⊕	⊕	⊖
Unlock	⊖	⊕	⊕	⊖	⊖	⊕	⊕	⊖	⊖	⊕

Fig. 8-193

REMOVAL AND INSTALLATION (FIG. 8-194, FIG. 8-195, FIG. 8-196, FIG. 8-197)

Refer to Section 10 "BODY" for door lock actuator removal and installation steps.

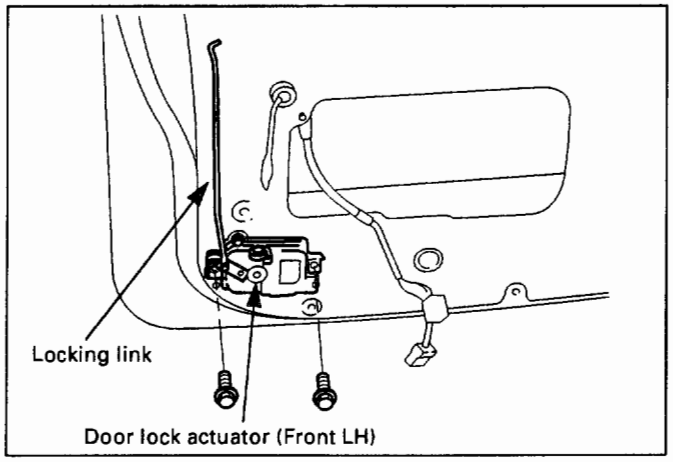

Fig. 8-194

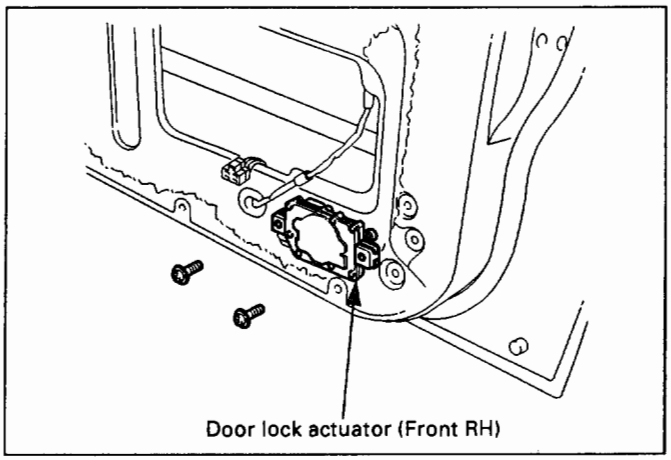

Fig. 8-195

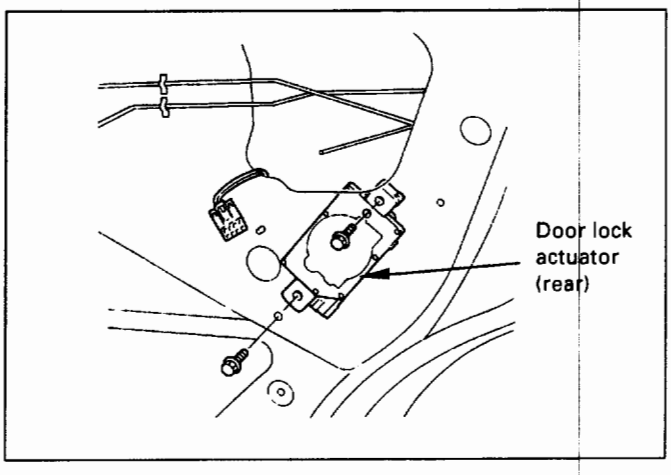

Fig. 8-196

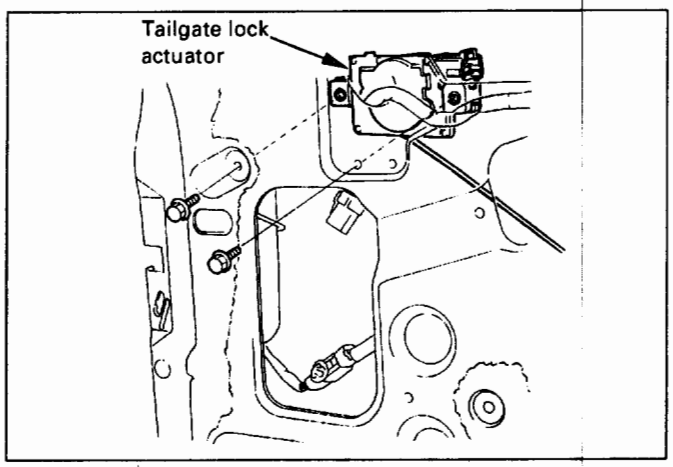

Fig. 8-197

MEMO

POWER WINDOW

GENERAL DESCRIPTION

The circuit consists of the starter switch, (door lock &) power window switch for each of the front windows, power widow switch for rear windows and power window motors.
When the starter switch is turned on, the battery voltage is applied to each of the power window switches through the circuit breaker and the power window relay on the circuit.
The "DOWN" switch of the driver's power window switch has a built-in function which can be operated by just touching it. Accordingly, the window will roll down automatically by just setting the switch to the AUTO position.
When the driver's power lock switch at the driver side is depressed, the power source to the passenger's power window switches are shut off. So, even if these switches are operated, the power window motor will not operate.

DOWN OPERATION OF FRONT POWER WINDOW-RH

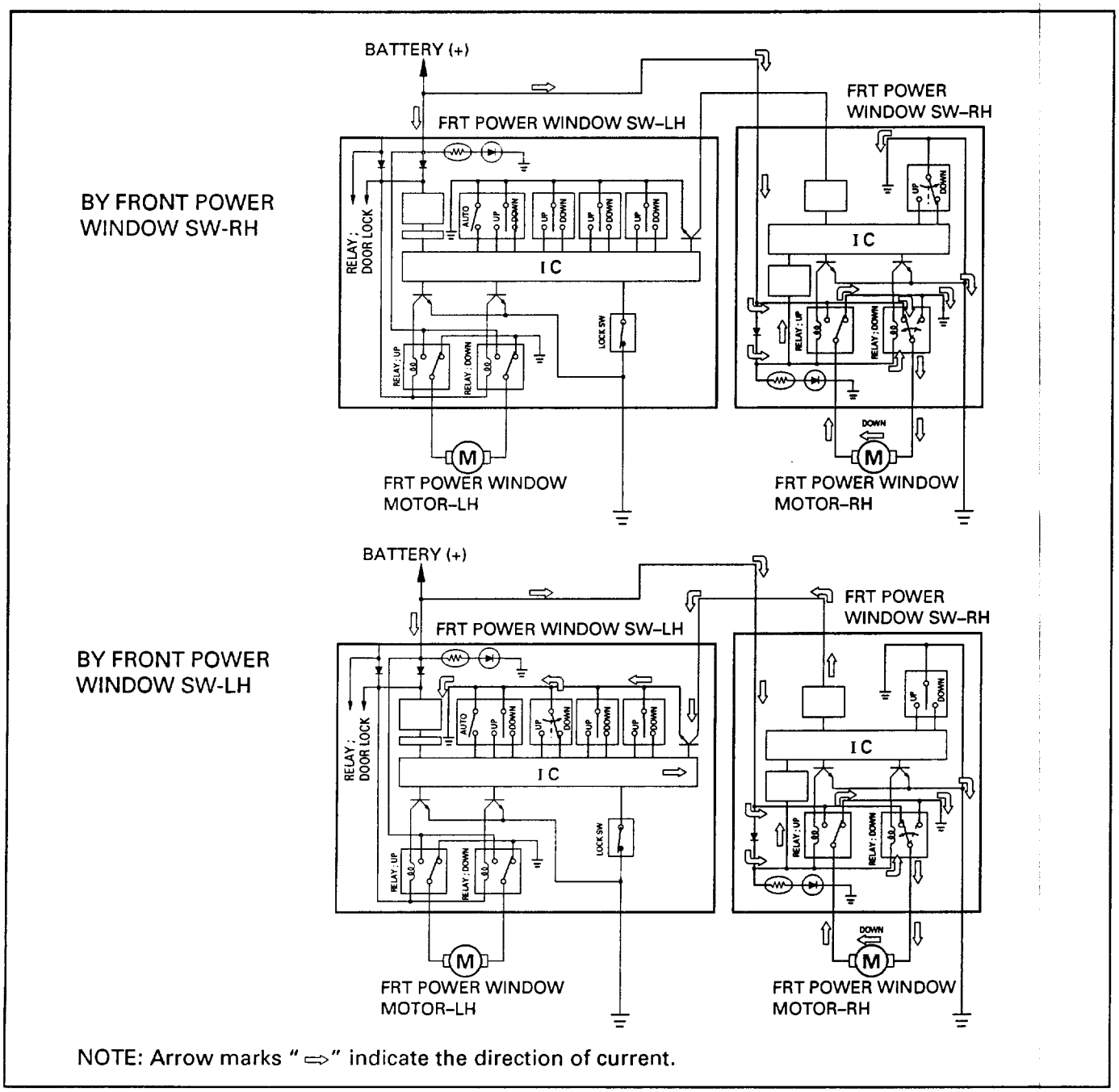

NOTE: Arrow marks " ⇨" indicate the direction of current.

Fig. 8-198

PARTS LOCATION

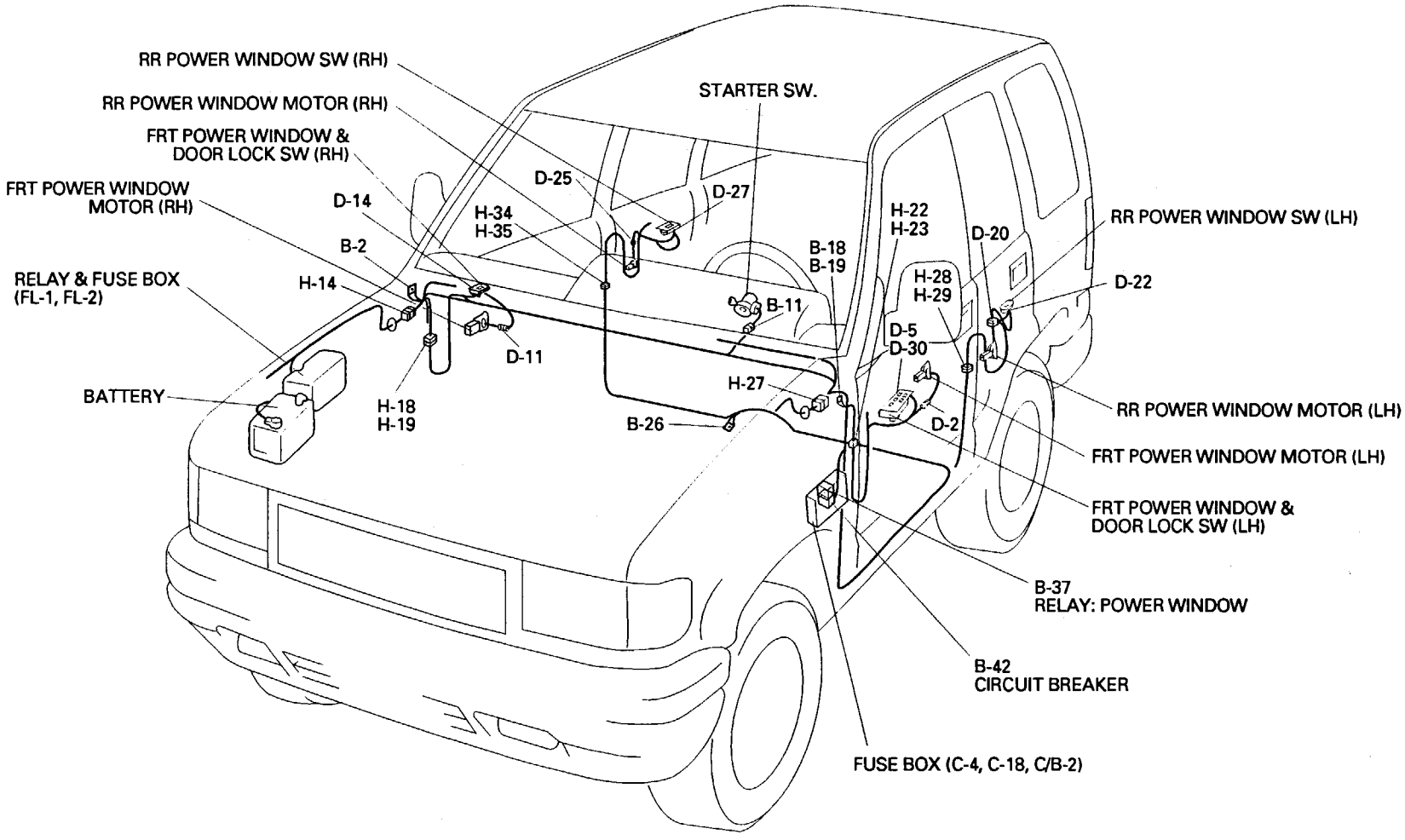

Fig. 8-199

CIRCUIT DIAGRAM

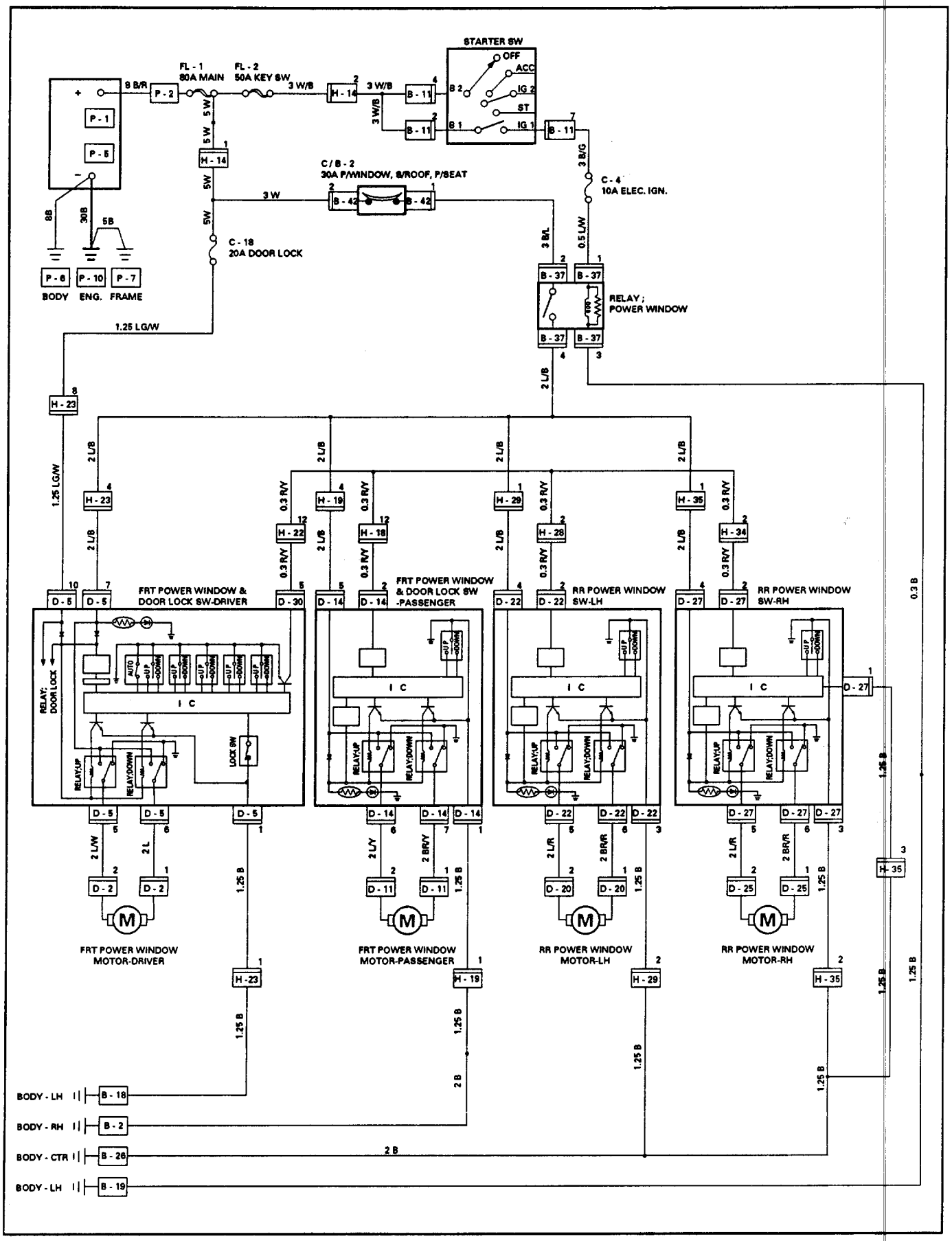

Fig. 8-200

CONNECTOR LIST

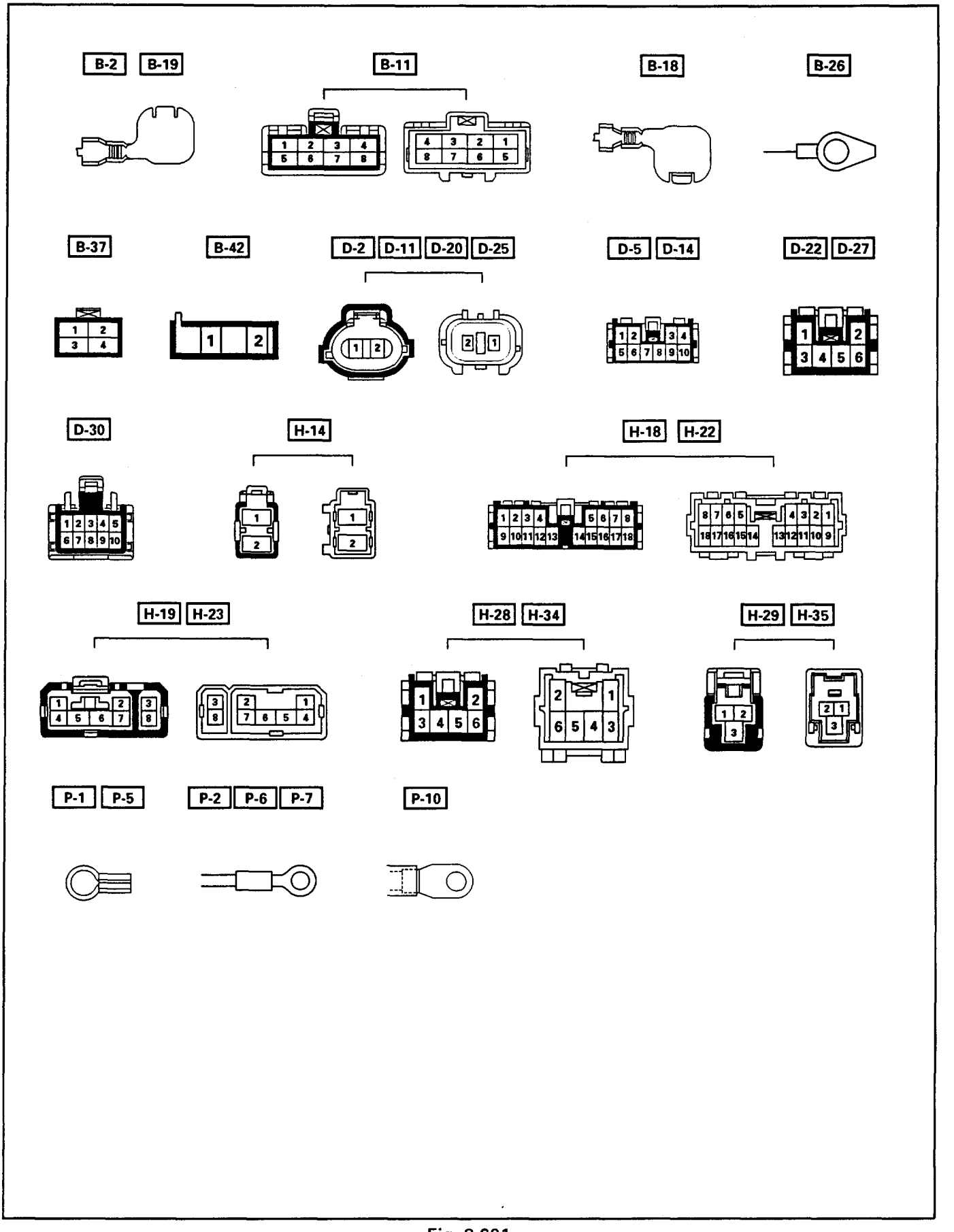

Fig. 8-201

DIAGNOSIS

QUICK CHART FOR CHECK POINTS

Check point / Trouble mode	Fuse C-4 (10A)	Circuit breaker	Power window relay	Power window SW				Power window motor				Cable harness
				Driver's side	FRT-RH	RR-LH	RR-RH	Driver's side	FRT-RH	RR-LH	RR-RH	
All windows do not operate	O (1)	O (2)	O (3)	O (5)								O (4)
Lock SW does not function				O (1)								
Driver's Window:												
Window does not operate	O (1)	O (2)	O (3)	O (6)				O (5)				O (4)
One-touch operation for "DOWN" movement will not operate				O (1)								
Window operates in only one direction				O (1)								
Front window on passenger seat side:												
Window does not operate				O (1)	O (4)				O (2)			O (3)
Window does not operate when operating the driver's SW				O (1)								O (2)
Window does not operate when operating the passenger's SW				O (2)	O (1)							O (3)
Window operate in only one direction when operating the driver's SW				O (1)	O (2)							
Window operate in only one direction when operating the passenger's seat side SW					O (1)							
Rear window on left (or right) side:												
Window on left (or right) side does not operate				O (1)		O (4)	O (4)			O (2)	O (2)	O (3)
Window does not operate when operating the driver's SW				O (1)								O (2)
Window operates in only one direction when operating the RR-LH (or RH) side SW						O (1)	O (1)					O (2)
Window operate in only one direction when operating the driver's SW				O (1)								

ALL WINDOWS DO NOT OPERATE

- IS FUSE C-4 (10A) NORMAL?

YES

- IS THE CIRCUIT BREAKER C/B-2 (30A) NORMAL?

NO

REPLACE THE FUSE

YES

- ARE B-18 AND B-19 SECURELY GROUNDED?

NO

REPLACE THE CIRCUIT BREAKER

YES

- IS THE POWER WINDOW RELAY NORMAL?

NO

GROUND THEM SECURELY

YES

- IS THE BATTERY VOLTAGE APPLIED BETWEEN 2 B-37 AND THE GROUND?

NO

REPLACE THE RELAY

YES

- TURN THE STARTER SW ON
- IS THE BATTERY VOLTAGE APPLIED BETWEEN 1 B-37 AND THE GROUND ?

NO

REPAIR A POOR CONNECTION AT THE CONNECTORS OR AN OPEN CIRCUIT BETWEEN 1 H-14 AND 2 B-37

YES

- IS THE BATTERY VOLTAGE APPLIED BETWEEN 7 D-5 AND GROUND?

NO

REPAIR A POOR CONNECTION AT THE CONNECTORS OR AN OPEN CIRCUIT BETWEEN FUSE C-4 (10A) AND 1 B-46

YES

- IS THERE BATTERY VOLTAGE APLIED BETWEEN B-18, B-19 AND THE GROUND?

NO

REPAIR A POOR CONNECTION AT THE CONNECTORS OR AN OPEN CIRCUIT BETWEEN 4 B-37 AND 7 D-5

YES

REPLACE THE DRIVER SIDE POWER WINDOW (& DOOR LOCK) SWITCH

NO

REPAIR A POOR CONNECTION AT THE CONNECTORS OR AN OPEN CIRCUIT BETWEEN 1 D-5 AND B-18 OR 3 B-37 AND B-19

LOCK SW DOES NOT FUNCTION

REPAIR OR REPLACE THE POWER WINDOW SW ON THE DRIVER'S SIDE

WINDOW ON THE DRIVER'S SIDE DOES NOT OPERATE

- START CHECKING THE ITEMS FOR "ALL WINDOWS DO NOT OPERATE" IN THIS SECTION

YES

- DISCONNECT THE CONNECTOR OF THE DRIVER SIDE POWER WINDOW (& DOOR LOCK) SWITCH
- WHEN CONNECTING THE CONNECTOR 5 [D-5] TO THE BATTERY (+) TERMINAL, AND 6 [D-5] TO THE (–) TERMINAL, DOES THE MOTOR ROTATE IN THE "UP" DIRECTION OF THE WINDOW? (OR WHEN CONNECTING 6 [D-5] TO THE (+) TERMINAL AND 5 [D-5] TO THE (–) TERMINAL, DOES THE MOTOR ROTATE IN THE "DOWN" DIRECTION OF THE WINDOW?)

NO

REPAIR A POOR CONNECTION AT CONNECTORS OR AN OPEN CIRCUIT BETWEEN HARNESS SIDE CONNECTOR TERMINALS 5 [D-5] AND 2 [D-2] (OR 6 [D-5] AND 1 [D-2]) OR REPLACE THE POWER WINDOW MOTOR (POWER WINDOW MOTOR CHECKING PROCEDURE: CONNECTING THE CONNECTOR 2 [D-2] TO THE BATTERY (+) TERMINAL, AND 1 [D-2] TO THE (–) TERMINAL, DOES THE MOTOR ROTATE IN THE "UP" DIRECTION OF THE WINDOW? (OR WHEN CONNECTING 1 [D-2] TO THE (+) TERMINAL AND 2 [D-2] TO THE (–) TERMINAL, DOES THE MOTOR ROTATE IN THE "DOWN" DIRECTION OF THE WINDOW?) OR REPLACE THE DRIVER SIDE POWER WINDOW (& DOOR LOCK) SWITCH

NO

REPAIR OR REPLACE THE DEFECTIVE PARTS

WINDOW ON THE FRONT PASSENGER'S SIDE DOES NOT OPERATE

- IS THE DRIVER SIDE WINDOW OPERATION NORMAL?

YES

- DISCONNECT THE CONNECTOR OF THE FRONT PASSENGER'S POWER WINDOW (& DOOR LOCK) SWITCH
- WHEN CONNECTING THE CONNECTOR 6 [D-14] TO THE BATTERY (+) TERMINAL, AND 7 [D-14] TO THE (–) TERMINAL, DOES THE MOTOR ROTATE IN THE "UP" DIRECTION OF THE WINDOW? (OR WHEN CONNECTING 7 [D-14] TO THE (+) TERMINAL AND 6 [D-14] TO THE (–) TERMINAL, DOES THE MOTOR ROTATE IN THE "DOWN" DIRECTION OF THE WINDOW?)

YES

REPAIR A POOR CONNECTION AT THE CONNECTORS OR AN OPEN CIRCUIT BETWEEN HARNESS SIDE CONNECTOR TERMINALS 6 [D-14] AND 2 [D-11] (OR 7 [D-14] AND 1 [D-11]) OR BETWEEN 5 [D-14] AND 4 [H-19], 2 [D-14] AND 12 [H-18] OR REPLACE THE POWER WINDOW MOTOR (POWER WINDOW MOTOR CHECKING PROCEDURE: CONNECTING THE CONNECTOR 2 [D-11] TO THE BATTERY (+) TERMINAL, AND 1 [D-11] TO THE (–) TERMINAL, DOES THE MOTOR ROTATE IN THE "UP" DIRECTION OF THE WINDOW? (OR WHEN CONNECTING 1 [D-11] TO THE (+) TERMINAL AND 2 [D-11] TO THE (–) TERMINAL, DOES THE MOTOR ROTATE IN THE "DOWN" DIRECTION OF THE WINDOW?) OR REPLACE THE PASSENGER SIDE POWER WINDOW (& DOOR LOCK) SWITCH

NO

REFER TO "WINDOW ON THE DRIVER SIDE DOES NOT OPERATE" IN THIS DIAGNOSIS FOR REPAIR

REAR WINDOW ON THE LEFT (OR RIGHT) SIDE DOES NOT OPERATE

- IS THE DRIVER SEAT SIDE WINDOW OPERATION NORMAL?

YES

- DISCONNECT THE CONNECTOR OF THE REAR LEFT (OR RIGHT) SIDE POWER WINDOW SWITCH
- WHEN CONNECTING THE CONNECTOR 5 [D-22] (5 [D-27]) TO THE BATTERY (+) TERMINAL, AND 6 [D-22] (6 [D-27]) TO THE (–) TERMINAL, DOES THE MOTOR ROTATE IN THE "UP" DIRECTION OF THE WINDOW? (OR, WHEN CONNECTING 6 [D-22] (6 [D-27]) TO THE (+) TERMINAL AND 5 [D-22] (5 [D-27]) TO THE (–) TERMINAL, DOES THE MOTOR ROTATE IN THE "DOWN" DIRECTION OF THE WINDOW?

YES

REPAIR A POOR CONNECTION AT THE CONNECTORS OR AN OPEN CIRCUIT BETWEEN 5 [D-22] AND 2 [D-20] (5 [D-27] AND 2 [D-25]) OR 6 [D-22] AND 1 [D-20] (6 [D-27] AND 1 [D-25]) OR BETWEEN 4 [D-22] (4 [D-27]) AND 1 [H-29] (1 [H-35]), 2 [D-22] (2 [D-27]) AND 2 [H-28] (2 [H-34]) OR REPLACE THE POWER WINDOW MOTOR (POWER WINDOW MOTOR CHECKING PROCEDURE: CONNECTING THE CONNECTOR 2 [D-20] (2 [D-25]) TO THE BATTERY (+) TERMINAL, AND 1 [D-20] (1 [D-25]) TO THE BATTERY (–) TERMINAL, DOES THE MOTOR ROTATE IN THE "UP" DIRECTION OF THE WINDOW? (OR WHEN CONNECTING 1 [D-20] (1 [D-25]) TO THE BATTERY (+) TERMINAL, AND 2 [D-20] (2 [D-25]) TO THE BATTERY (–) TERMINAL, DOES THE MOTOR ROTATE IN THE "DOWN" DIRECTION OF THE WINDOW?) OR REPLACE THE REAR POWER WINDOW SWITCH-LH (RH)

NO

REFER TO "WINDOW ON THE DRIVER SIDE DOES NOT OPERATE" IN THIS DIAGNOSIS FOR REPAIR

STARTER SWITCH

Refer to "START AND CHARGING" in this section.

POWER WINDOW SWITCH

DRIVER SEAT SIDE

This switch can be used to open and close all the windows on both front and rear sides.
Only the switch panel at the driver seat is provided with switches that operate the other windows.
And, only the driver's window has a "one touch" mechanism for rolling the window all the way down automatically. (Fig.8-202)

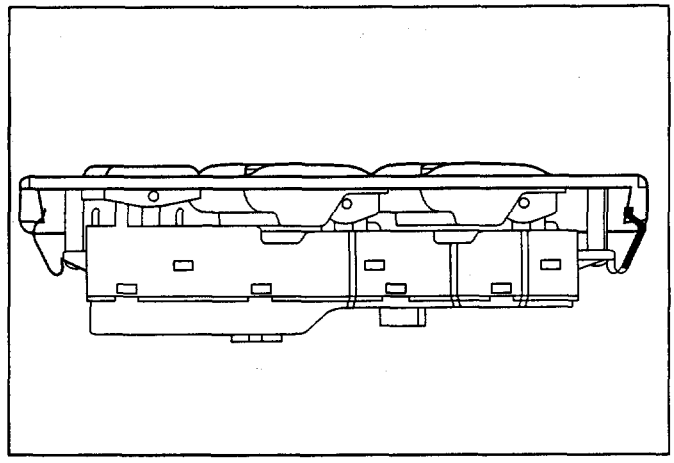

Fig. 8-202

Circuit inspection of the driver seat side power window switch

Remove the connectors of the driver's power window switch, and check the voltage and continuity between the harness side connector terminals. (Fig. 8-203)

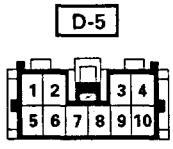

Harness side

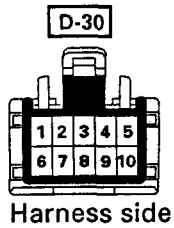

Harness side

Connector No.	Terminal No.	Wire color	Connected to	Item to be checked	Connecting terminal	Checking conditions	Standard
D-5	1	B	Ground	Continuity	1-Ground	—	Continuity
	5	L/W	FRT Power window motor-LH		5 – 6		
	6	L					
	7	L/B	Power window relay	Voltage	7-Ground	Starter SW "ON"	Approx. 12V
	10	LG/W	Fuse C-18 (20A)		10-Ground	—	
D-30	5	R/Y	Power window SW (FRT-RH, RR-RH, LH)	Continuity	5-Ground	—	Continuity

Fig. 8-203

REMOVAL (Fig. 8-204)

Preparation: Disconnect the battery ground cable.

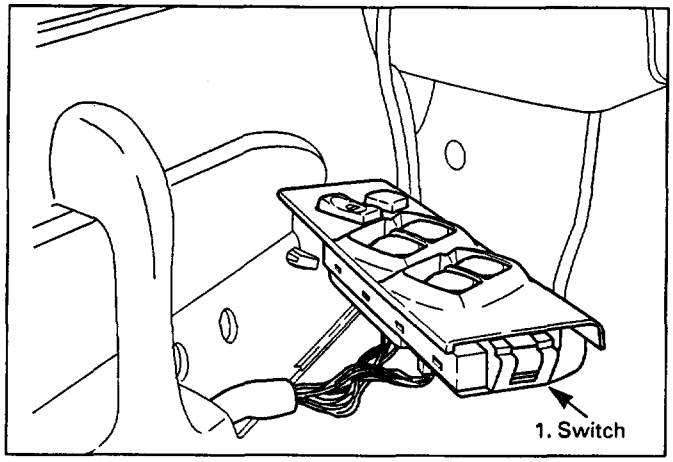

Fig. 8-204

1. **Switch**
   - Pull out the switch.
   - Disconnect two connectors.

INSTALLATION

To install, follow the removal steps in the reverse order.

FRONT PASSENGER SEAT SIDE

This switch can be used to open and close the front passenger's window.
The switch is designed not to function if the lock switch on the driver seat side is depressed. (Fig. 8-205)

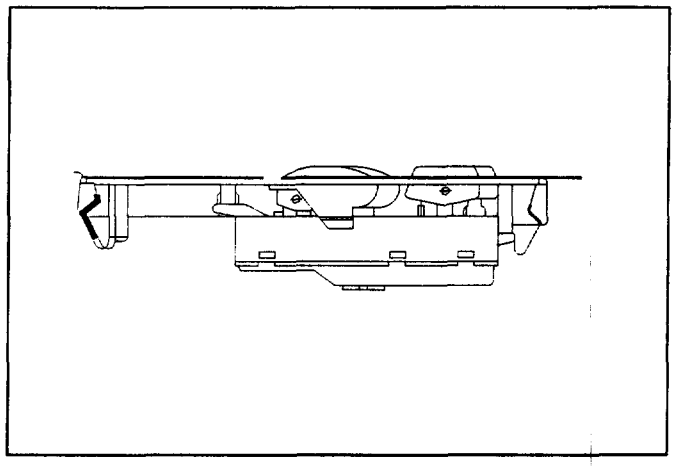

Fig. 8-205

Circuit inspection of the front passenger power window switch

Remove the switch connectors to check the voltage and the continuity between the harness side connectors. (Fig. 8-206)

D-14

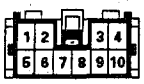

Harness side

Terminal No.	Wire color	Connected to	Item to be checked	Connecting terminal	Checking conditions	Standard
1	B	Ground	Continuity	1-Ground	—	Continuity
2	R/Y	Front power window SW	Voltage	2-Ground	Starter SW "ON"	Approx. 12V
5	L/B	Power window relay		5-Ground		
6	L/Y	Front power window motor-RH	Continuity	6 – 7	—	Continuity
7	BR/Y					

Fig. 8-206

REMOVAL (Fig. 8-207)

Preparation: Disconnect the battery ground cable.

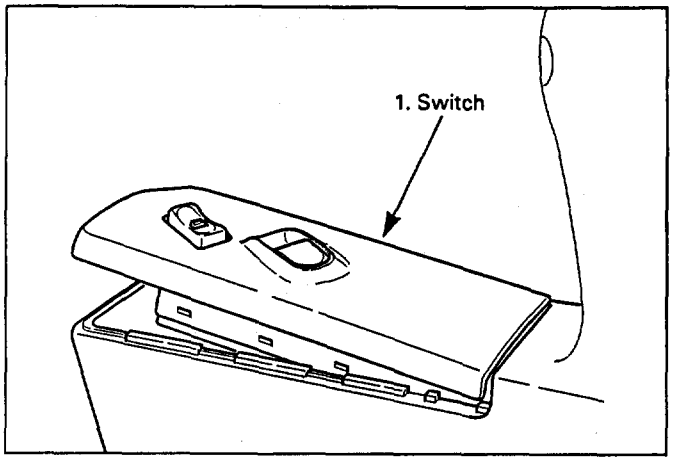

Fig. 8-207

1. **Switch**
   - Remove the switch by pushing the spring with the tip of a screwdriver.
   - Disconnect connector.

INSTALLATION

To install, follow the removal steps in the reverse order.

REAR - LEFT AND RIGHT SIDES

This switch can be used to open and close the rear windows on the left and right sides.
This switch is designed not to function if the driver's window side lock switch is depressed. (Fig. 8-208)

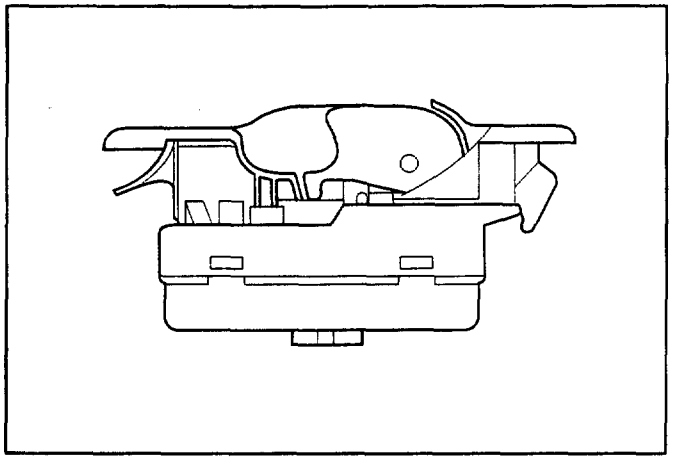

Fig. 8-208

INSPECTION

Circuit inspection

Remove the switch connectors to check the voltage and the continuity between the harness side connector terminals. (Fig. 8-209)

D-22 D-27

Harness side

Terminal No.	Wire color	Connected to	Item to be checked	Connecting terminal	Checking conditions	Standard
2	R/Y	Front power window SW	Voltage	2-Ground	Starter SW "ON"	Approx. 12V
3	B	Ground	Continuity	1-Ground	—	Continuity
4	L/B	Power window relay	Voltage	4-Ground	Starter SW "ON"	Approx. 12V
5	L/R	Rear power window Motor LH/RH	Continuity	5 – 6	—	Continuity
6	BR/R					

Fig. 8-209

REMOVAL (Fig. 8-210)

Preparation: Disconnect the battery ground cable.

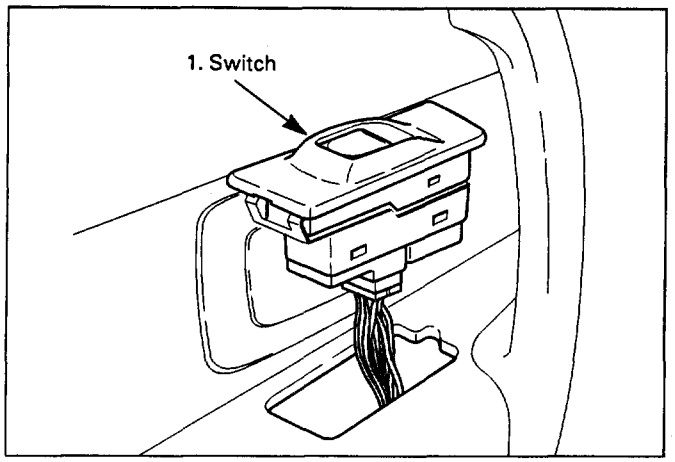

Fig. 8-210

1. **Switch**
   - Remove the switch by pushing the spring with the tip of a screwdriver.
   - Disconnect connector.

INSTALLATION

To install, follow the removal steps in the reverse order.

POWER WINDOW MOTOR-DRIVER SEAT SIDE

INSPECTION

Before checking the motor, be sure to start check the circuit through the driver's power window switch connector D-5 and the circuit between drivers seat side power window switch and the power window relay.
If the motor does not operate correctly, either the motor or the circuit is defective.

1. **Circuit inspection between fuse and the ground, circuit breaker and the power window switch-LH (Fig. 8-211)**
   1. Check to see if fuse C-4 (10A), circuit breaker and power window relay is normal. Repair or replace the defective parts.
   2. Disconnect the front power window SW-LH connector.
   3. Check to see if battery voltage applied at 7 D-5 and the ground when starter switch is "ON" position.
      Repair a poor connection of the connectors or an open circuit between 1 B-42 and 2 B-37, 4 B-37 and 7 D-5, fuse C-4 and 1 B-37, 3 B-37 and B-19.

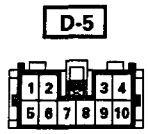

Connecting terminal		Operation
5 (L/W)	6 (L)	
⊖	⊕	DOWN
⊕	⊖	UP

Fig. 8-211

2. **Inspection of the driver seat side motor**
   Remove the motor connector and apply battery voltage to the motor side connector terminals to check its function. (Fig. 8-212)
   Replace the motor when the result of inspection is found abnormal.

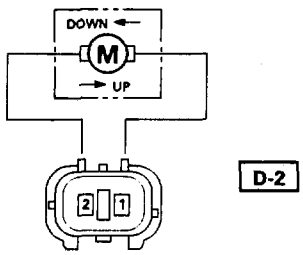

Direction of operation \ Terminal No.	1	2
DOWN	⊕	⊖
UP	⊖	⊕

Fig. 8-212

REMOVAL

Preparation: Disconnect the battery ground cable.

1. **Window regulator assembly**
   - Refer to the removal of "Window regulator and glass" in Section 10, Body.
2. **Power window motor**
   - Remove three screws. (Fig. 8-213)

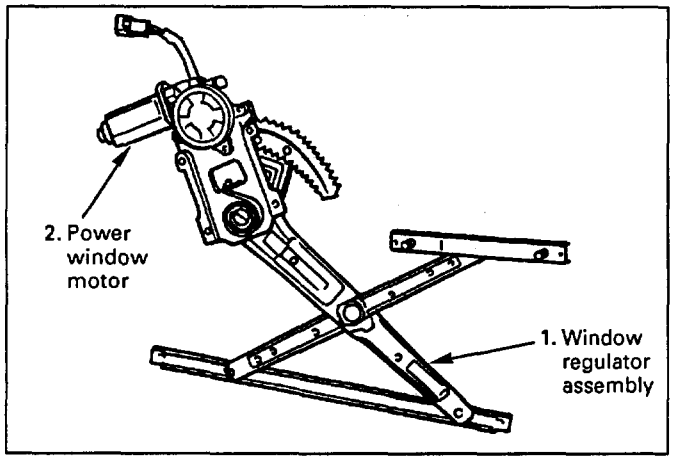

Fig. 8-213

Caution:
When removing the motor from the regulator, be careful not to get injured by the strong repellent force of the regulator spring.

INSTALLATION

To install, follow the removal steps in the reverse order.

FRONT PASSENGER SEAT SIDE

INSPECTION

Before checking the motor, be sure to start checking the circuit through the front passenger's switch connector D-14 and the circuit between driver seat switch/power window relay and the front passenger switch.
If the motor will not function correctly, either the motor or the circuit is defective.

1. **Circuit inspection of the front passenger seat side window**
   Disconnect the switch connector and apply battery voltage to the harness side connector terminals to check its function. (Fig. 8-214)

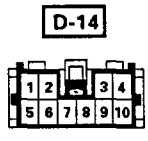

Harness side

Connecting terminal		Direction of Operation
6 (L/Y)	7 (BR/Y)	
⊖	⊕	DOWN
⊕	⊖	UP

Fig. 8-214

2. **Circuit inspection between front power window switch-LH/power window relay and front passenger power window switch**
   1. Disconnect the front passenger switch connector D-14.
   2. Check to see if battery voltage applied at 2 D-14, 5 D-14 and the ground when starter switch is "ON" position.
      Repair a poor connection of the connectors or an open circuit between 2 D-14 and 12 H-18, 5 D-14 and 4 H-19.
3. **Inspection of the front passenger window motor**
   Disconnect the motor connector and apply battery voltage to the motor side connector terminals to check its function. (Fig. 8-215)
   Repair or replace the motor when the result of inspection is found abnormal.

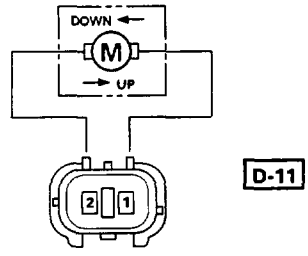

Direction of operation \ Terminal No.	1	2
DOWN	⊕	⊖
UP	⊖	⊕

Fig. 8-215

REMOVAL

Preparation: Disconnect the battery ground cable.

1. **Window regulator assembly**
   - Refer to the removal of "Window regulator and glass" in Section 10, Body.
2. **Power window motor (Fig. 8-216)**
   - Remove three screws.

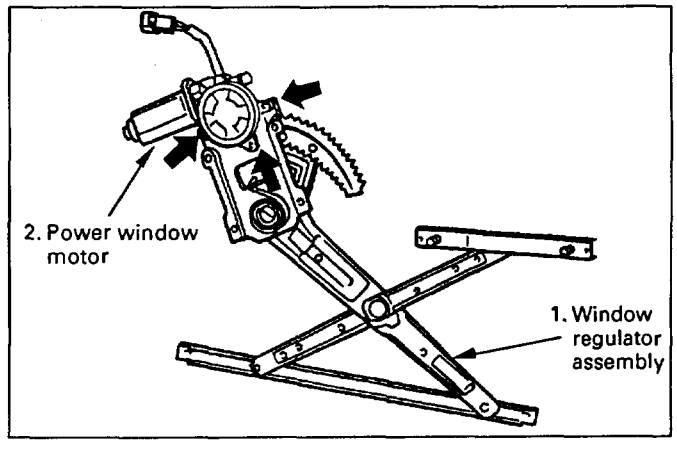

Fig. 8-216

Caution:
When removing the regulator from the motor, be careful not to get injured by the strong force of the regulator spring.

INSTALLATION

To install, follow the removal steps in the reverse order.

REAR-LEFT SIDE

INSPECTION

Before checking the motor, be sure to start checking the rear window switch (left) connector D-22 and the circuit between front power window switch-LH/ power window relay and the rear power window switch-LH.
If the motor will not operate correctly, either the motor or the circuit is defective.

1. Circuit inspection of the rear window switch circuit - left side

Disconnect the switch connector and apply battery voltage to the harness side connector terminals to check its function. (Fig. 8-217)

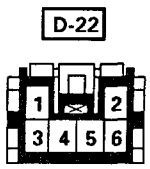

Harness side

Connecting terminal		Direction of Operation
5 (L/R)	6 (BR/R)	
⊕	⊖	UP
⊖	⊕	DOWN

Fig. 8-217

2. Circuit inspection between front power window switch-LH/power window relay and rear power window left side switch

1. Disconnect the rear power window switch-LH connector D-22.
2. Check to see if battery voltage applied at 4 D-22, 2 D-22 and the ground when starter switch is "ON" position.
   Repair a poor connection of the connectors or an open circuit between 4 D-22 and 1 H-29, 2 D-22 and 2 H-28.

3. Inspection of the rear window motor - left side

Disconnect the motor connector and apply battery voltage to the motor side connector terminals to check its function. (Fig. 8-218)
Repair or replace the motor, when the result of inspection is found abnormal.

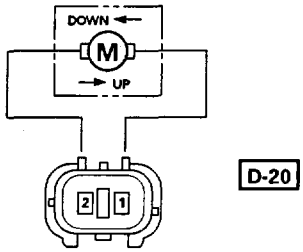

Direction of operation \ Terminal No.	1	2
DOWN	⊕	⊖
UP	⊖	⊕

Fig. 8-218

REMOVAL

Preparation: Disconnect the battery ground cable.

1. Rear window regulator assembly

- Refer to the removal of "Window regulator" in Section 10, Body.

2. Power window motor (Fig. 8-219)

- Remove three screws.

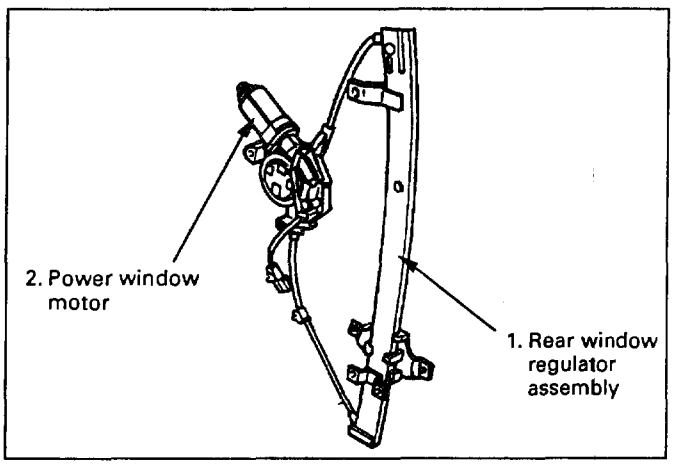

Fig. 8-219

INSTALLATION

To install, follow the removal steps in the reverse order.

REAR - RIGHT SIDE

INSPECTION

Before checking the motor, be sure to start checking the rear power window switch (right) harness side connector D-27 and the circuit between front power window switch-LH/power window relay and the rear power window switch-RH.
If the motor will not operate correctly, either the motor or the circuit are defective.

1. **Circuit inspection of the rear window switch - right side**
   Disconnect the switch connector and apply battery voltage to the harness side connector terminals to check its function. (Fig. 8-220)

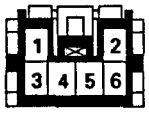

Harness side

Connecting terminal		Direction of Operation
5 (L/R)	6 (BR/R)	
⊕	⊖	UP
⊖	⊕	DOWN

Fig. 8-220

2. **Circuit inspection between front power window switch-LH/power window relay and rear power window right side switch**
   1. Disconnect the rear power window switch-RH connector D-27 .
   2. Check to see if battery voltage applied at 4 D-27 , 2 D-27 and the ground when starter switch is "ON" position.
      Repair a poor connection of the connectors or an open circuit between 4 D-27 and 1 H-35 , 2 D-27 and 2 H-34 .
3. **Inspection of the rear window motor - right side**
   Disconnect the motor connector and apply battery voltage to the motor side connector terminals to check its function. (Fig. 8-221)
   Repair or replace the motor when the result of inspection is found abnormal.

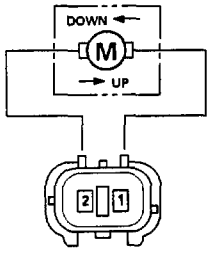

Direction of operation \ Terminal No.	1	2
DOWN	⊕	⊖
UP	⊖	⊕

Fig. 8-221

REMOVAL AND INSTALLATION

Refer to the removal and installation steps of the rear power window motor-left of this section.

POWER WINDOW RELAY

INSPECTION

Check to see if there is any continuity between the relay terminals. (Fig. 8-222)
When the result of inspection is found abnormal, replace the relay.

② – ④ . . . . . No continuity

(When applying battery voltage between ① and ③)

② – ④ . . . . . No continuity

Note:
For the relay removal, refer to "Connector Handling" under "NOTES FOR WORKING ON ELECTRICAL ITEMS" in this section.

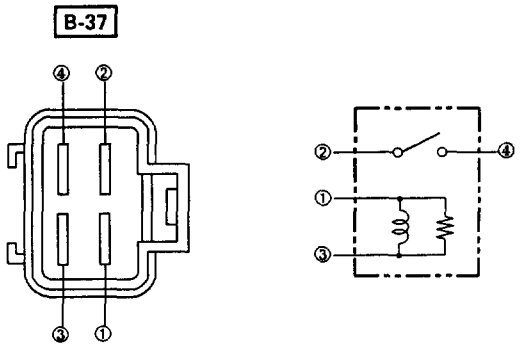

Fig. 8-222

CRUISE CONTROL

GENERAL DESCRIPTION

The circuit consists of the starter switch, cruise main switch, control switch, control unit, pump and actuator, brake switch, clutch switch (M/T), mode switch (A/T), vehicle speed sensor (incorporated into speedometer), and indicator lights.

The cruise control system keeps the vehicle running at a fixed speed until a signal canceling this speed is received.

When the vehicle is in a running state with the main switch on, the battery voltage is applied to the control unit. When a signal from the control switch is input into the control unit, while the vehicle is in this state, the cruise control actuator is activated to operate the system.

Also, while the system is operating, the "AUTO CRUISE" indicator light in the instrument panel cluster lights up.

Refer to Section 9B "CRUISE CONTROL" for detail.

OPERATION OF CRUISE CONTROL MAIN SW AND CRUISE MAIN RELAY

1. Main SW is at ON position for an instant after being pressed
2. Main SW returns to NEUTRAL position from ON position instantly
3. Main SW returns to NEUTRAL position from OFF position after being set to OFF

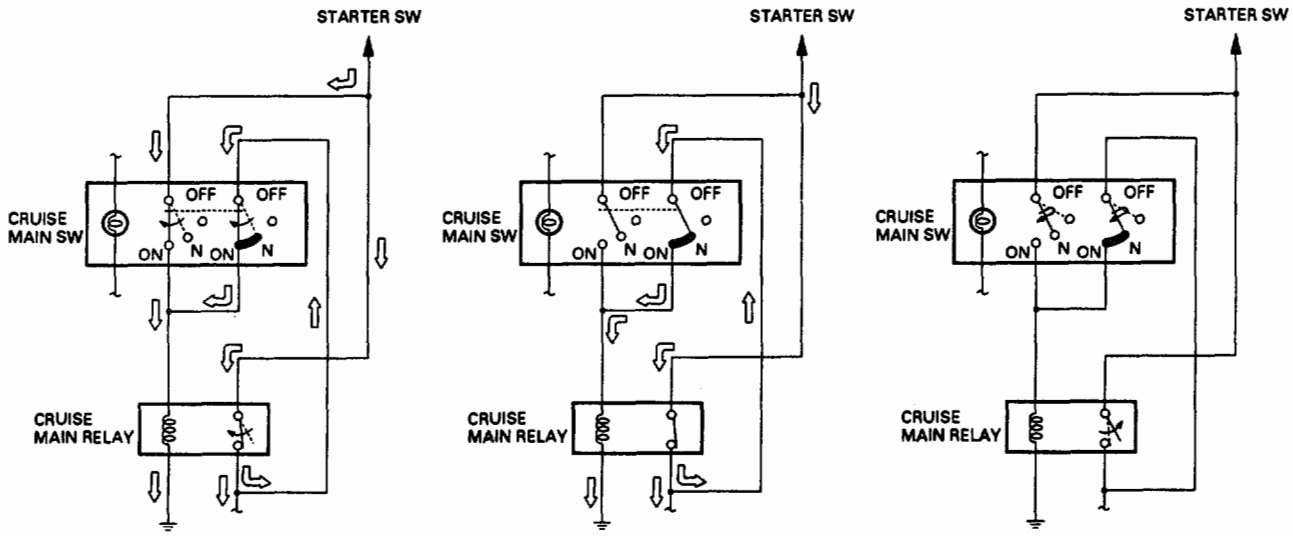

NOTE: Arrow marks " ⇨ " indicate the direction of current

Fig. 8-223

PARTS LOCATION

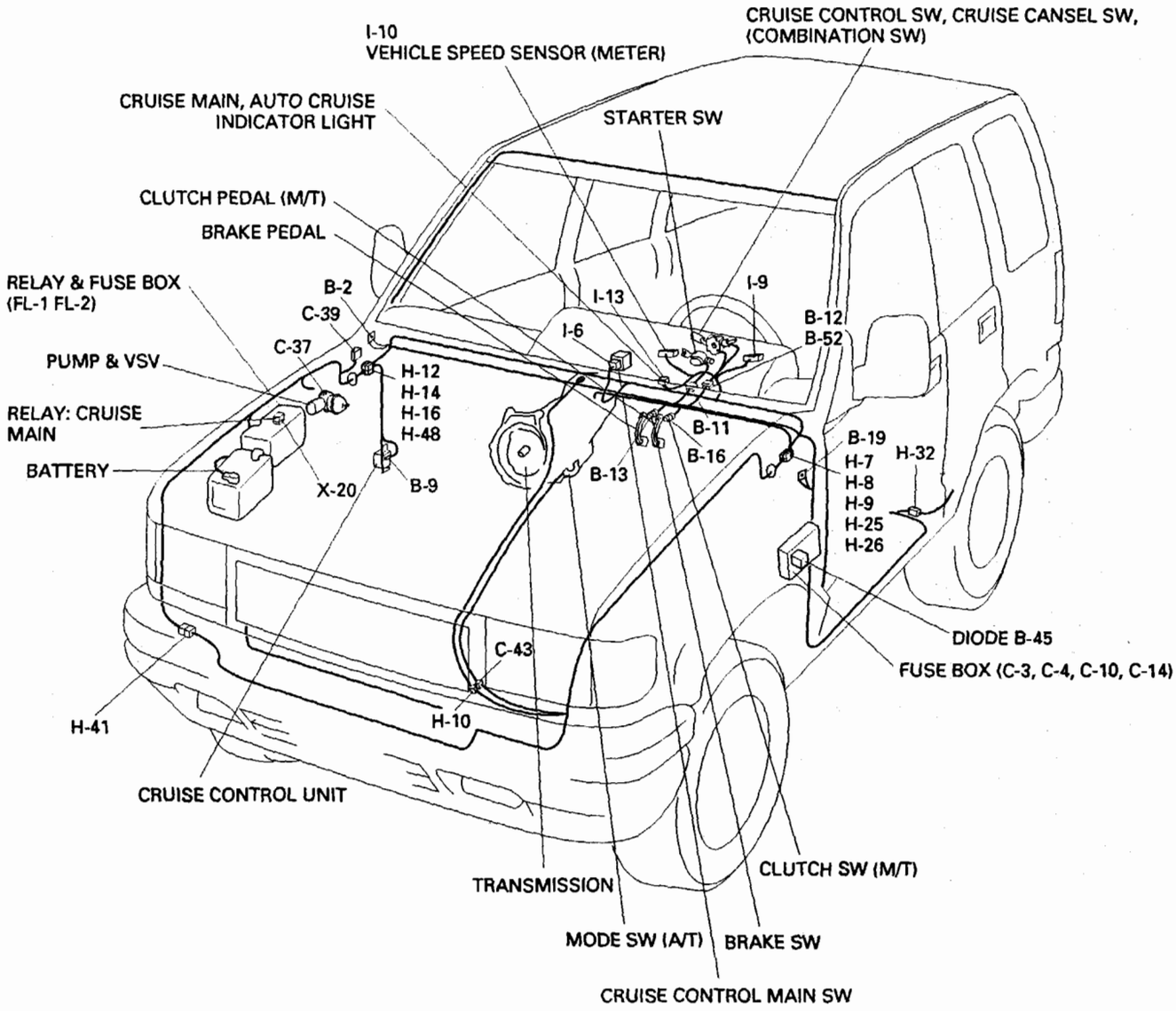

Fig. 8-224

CIRCUIT DIAGRAM

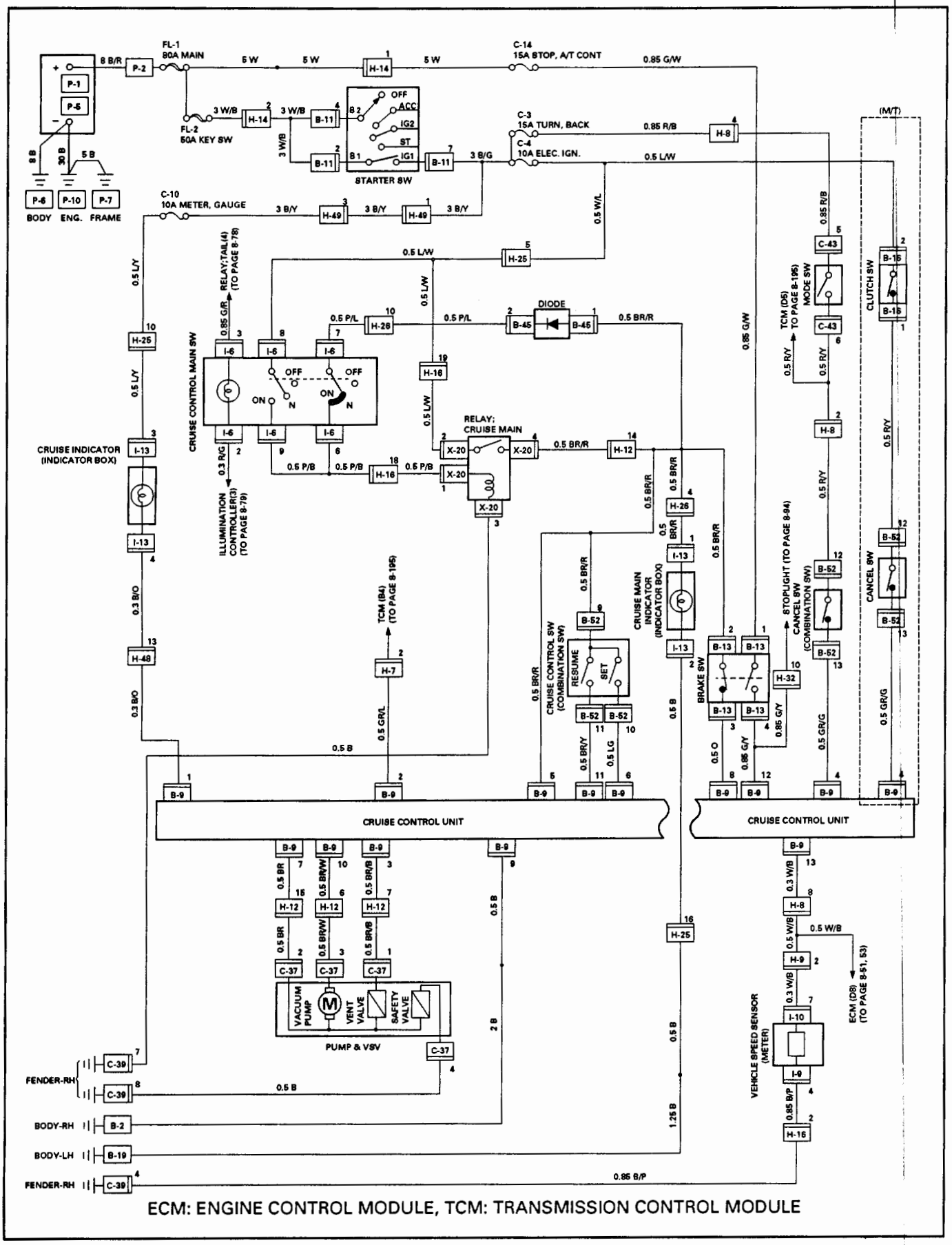

ECM: ENGINE CONTROL MODULE, TCM: TRANSMISSION CONTROL MODULE

Fig. 8-225

CONNECTOR LIST

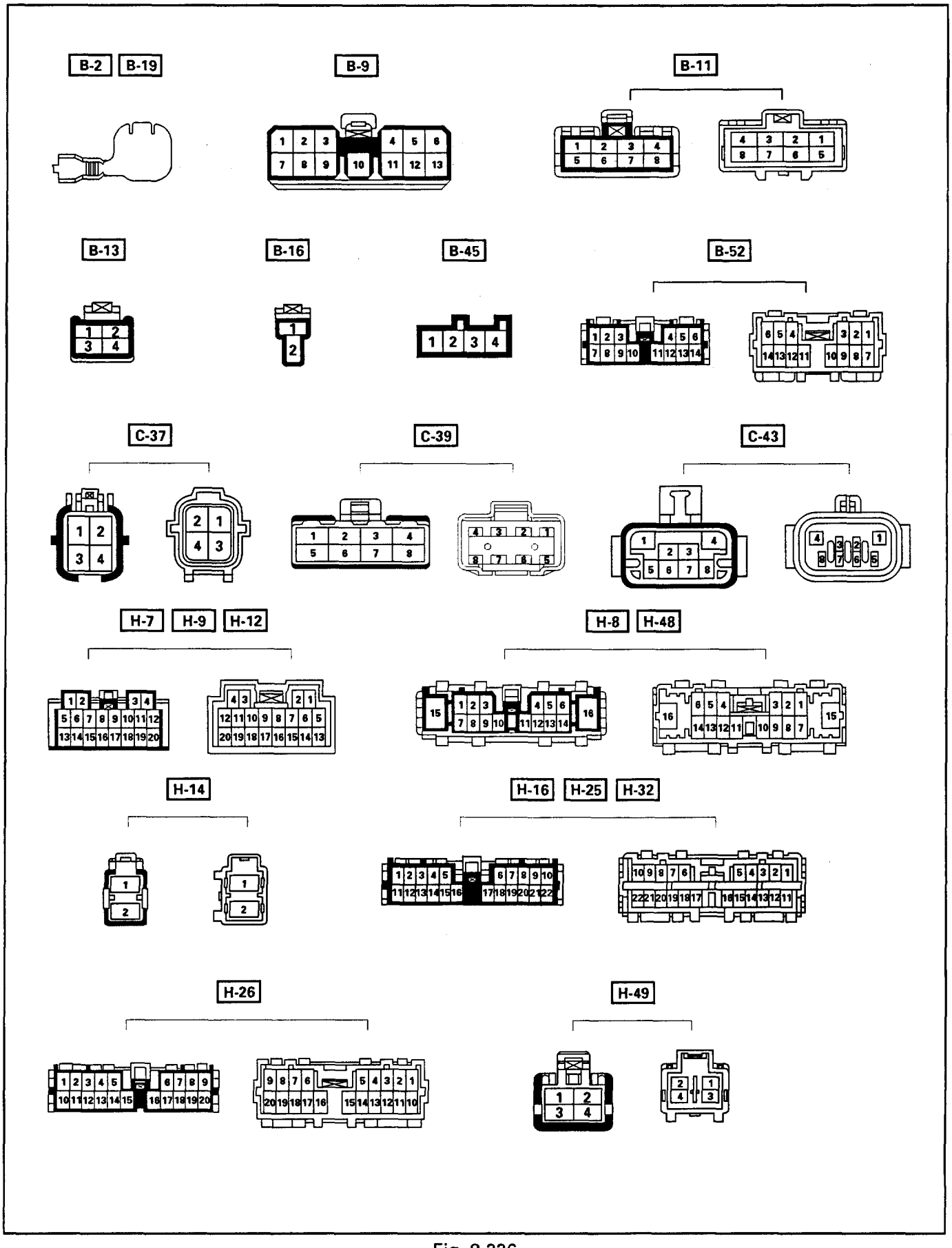

Fig. 8-226

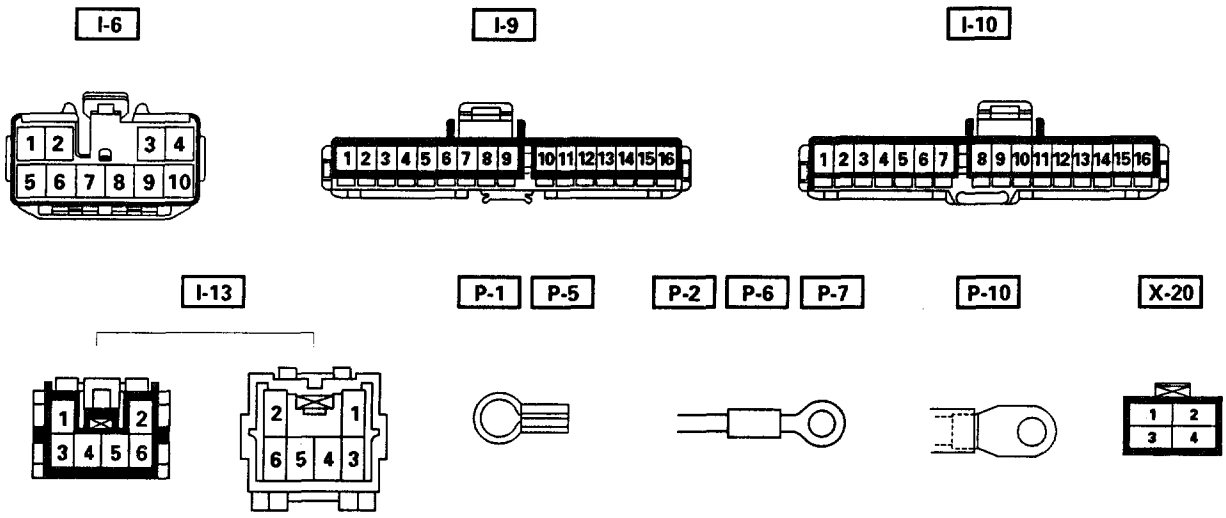
I-6
1 2 3 4
5 6 7 8 9 10
I-9
1 2 3 4 5 6 7 8 9 10 11 12 13 14 15 16
I-10
1 2 3 4 5 6 7 8 9 10 11 12 13 14 15 16
I-13
1 2 3 4 5 6
2 1 6 5 4 3
P-1
P-5
P-2
P-6
P-7
P-10
X-20
1 2 3 4

Fig. 8-227

MEMO

ANTI-LOCK BRAKE SYSTEM (ABS)

GENERAL DESCRIPTION

The circuit consists of the starter switch, stoplight switch (vehicle w/o cruise control), brake switch (vehicle with cruise control), hydraulic unit, electronic brake control module, wheel speed sensor, G sensor, ABS and 4WD indicator, 4WD switch and data link connector.
When the service brake is applied while in the running mode, the EBCM (Electronic Brake Control Module) judges which wheel is about to lock by using the wheel rotation speed signals sent from the four ABS speed sensors at the front and rear wheels. And the brake fluid pressure applied to the four wheels is controlled by a hydraulic unit to prevent the wheels from locking.
Based on the wheel rotation speed signals input from the ABS sensor, the EBCM sends out signals to the solenoid valve in the hydraulic unit to increase, maintain or decrease the brake fluid pressure. The solenoid valve uses this signal to control the fluid pressure which is applied to the calipers of the disk brakes of the front wheels. (The system also controls at the same time the fluid pressure applied to the rear wheels.)

- **EBCM (Electronic brake control module)**
  The EBCM uses the signals sent from the speed sensor to control the operation of the hydraulic unit. When any malfunction occurs in the ABS, the EBCM activates the fail-safe fuction while turning on the ABS warning light.
- **Hydraulic unit**
  The hydraulic unit consists of the motor, plunger pump, solenoid valve, and fluid pressure control valves. The exterior of the unit has a relay box consisting of the motor relay and valve relay. Three solenoid valves, the two of which are provided at the front wheels and the one at the rear wheels, control the fluid pressure of these wheels.
- **Speed sensor**
  The speed sensor consists of the sensor and the rotor. It sends the EBCM the AC voltage generated by the rotation of the rotor as the vehicle speed signal.
- **G-sensor**
  The G-sensor, installed inside the center console, sends out signals to the EBCM by detecting the decelerating speed of the vehicle.
- **ABS warning light**
  The ABS warning light in the instrument panel, lights up when any malfunction occurs in the ABS. It also lights up with the starter key at the "ON" position, as a self-check.

Refer to Section 5A4, "ANTI-LOCK BRAKE SYSTEM" for detail.

PARTS LOCATION

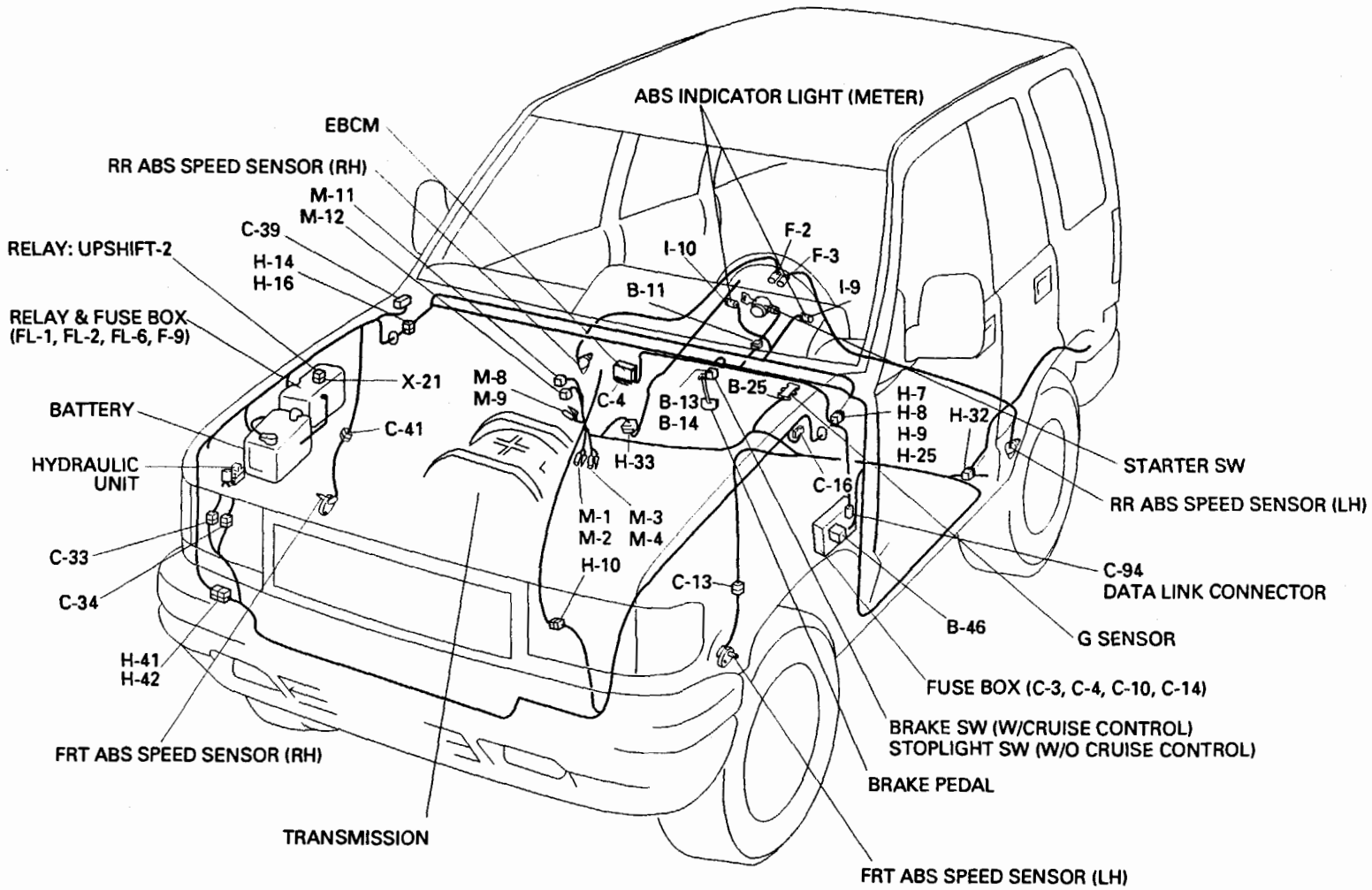

Fig. 8-228

CIRCUIT DIAGRAM - 1

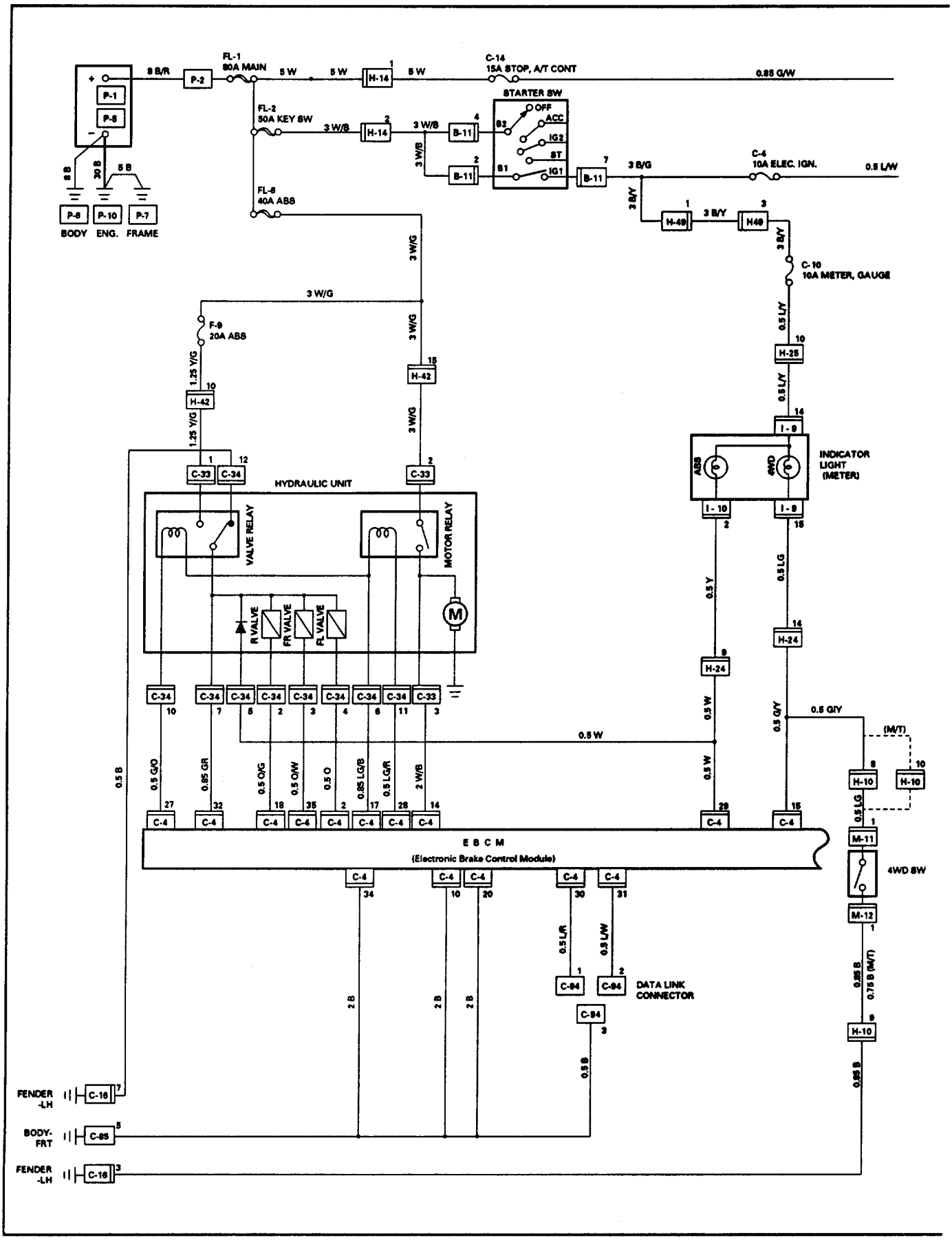

Fig. 8-229

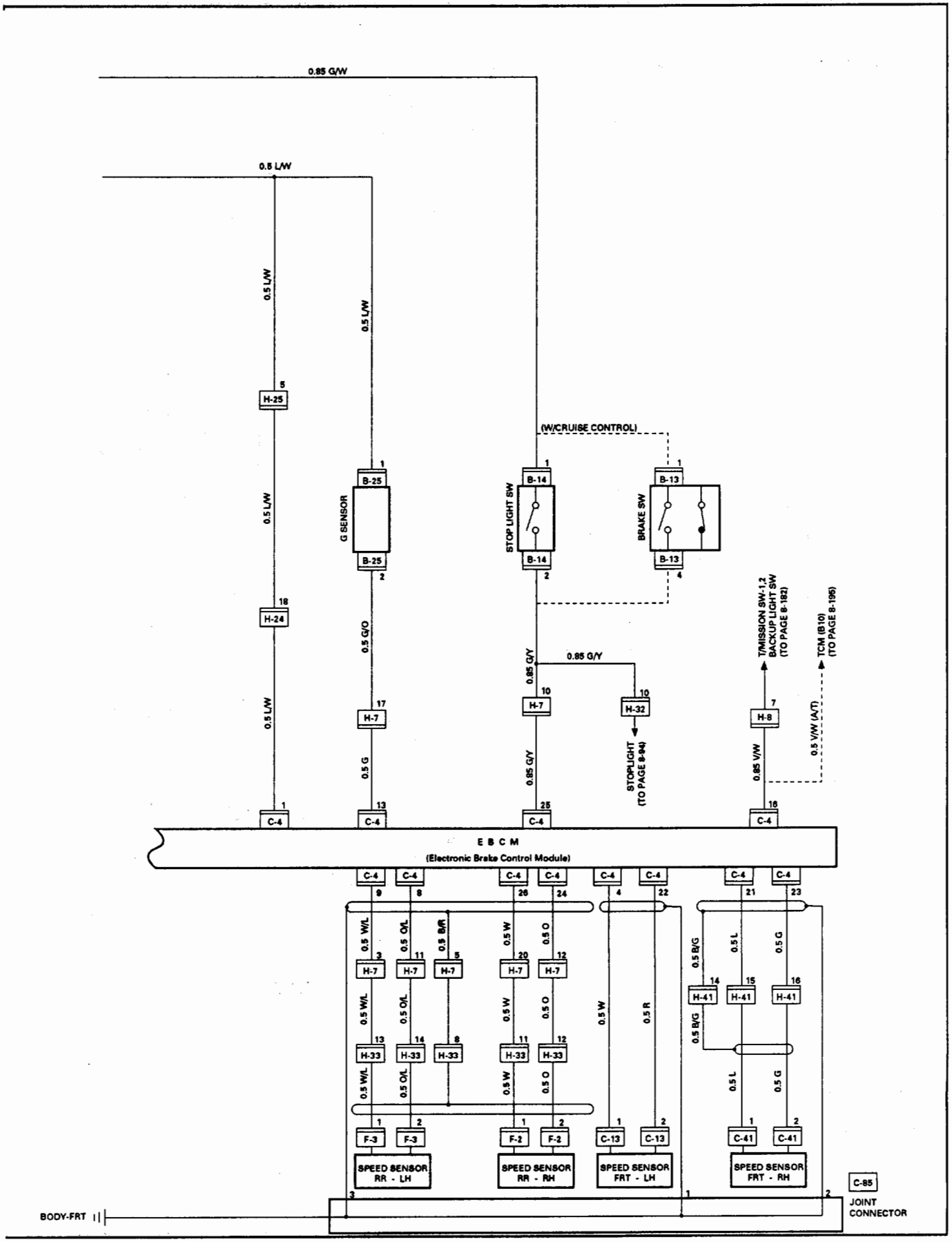
0.85 G/W
0.5 L/W
0.5 L/W
0.5 L/W
0.5 L/W
0.5 L/W
0.5 L/W
H-25
H-24
B-25
G SENSOR
B-25
0.5 G/O
H-7
0.5 G
C-4
C-4
(W/CRUISE CONTROL)
B-14
STOP LIGHT SW
B-14
B-13
BRAKE SW
B-13
0.85 G/Y
0.85 G/Y
H-7
H-32
STOPLIGHT
(TO PAGE 8-94)
0.85 G/Y
C-4
T/MISSION SW-1,2
BACKUP LIGHT SW
(TO PAGE 8-182)
TCM (B10)
(TO PAGE 8-195)
H-8
0.85 V/W
0.5 V/W (A/T)
C-4
E B C M
(Electronic Brake Control Module)
C-4
0.5 W/L
0.5 O/L
0.5 B/R
0.5 W
0.5 O
H-7
H-33
0.5 W
0.5 R
0.5 B/G
0.5 L
0.5 G
H-41
F-3
F-2
C-13
C-41
SPEED SENSOR
RR - LH
SPEED SENSOR
RR - RH
SPEED SENSOR
FRT - LH
SPEED SENSOR
FRT - RH
C-85
JOINT
CONNECTOR
BODY-FRT

CIRCUIT DIAGRAM - 2

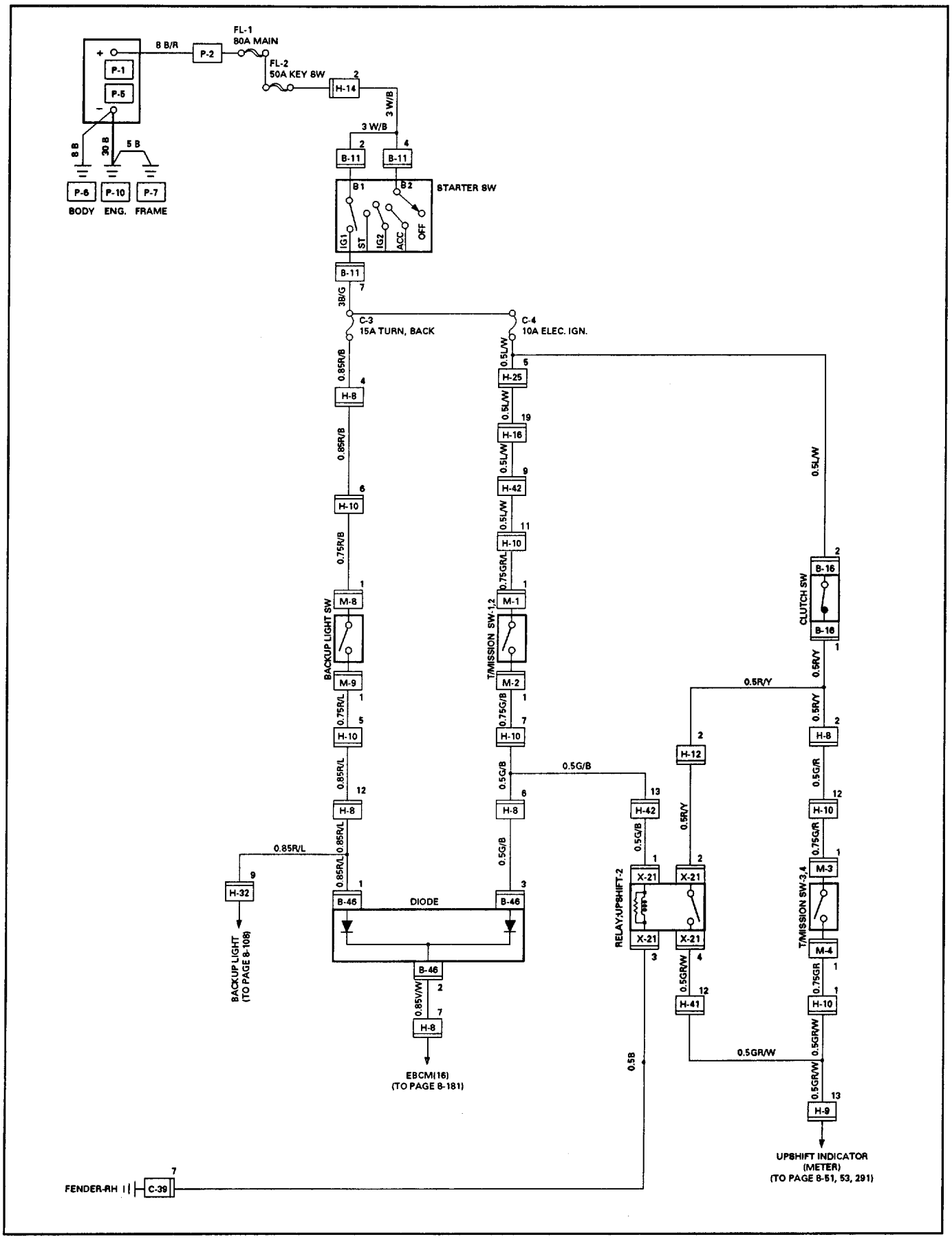

Fig. 8-230

CONNECTOR LIST

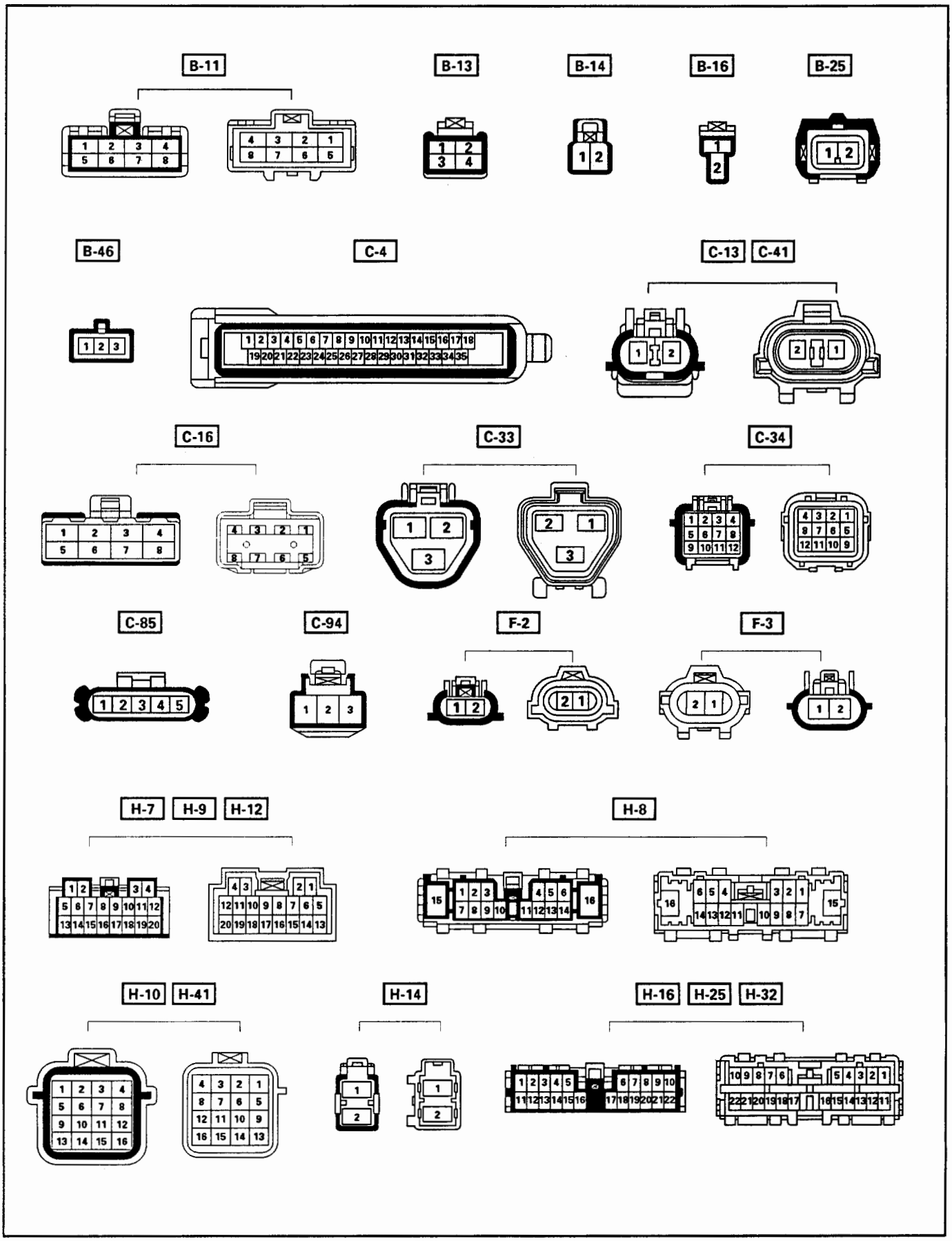

Fig. 8-231

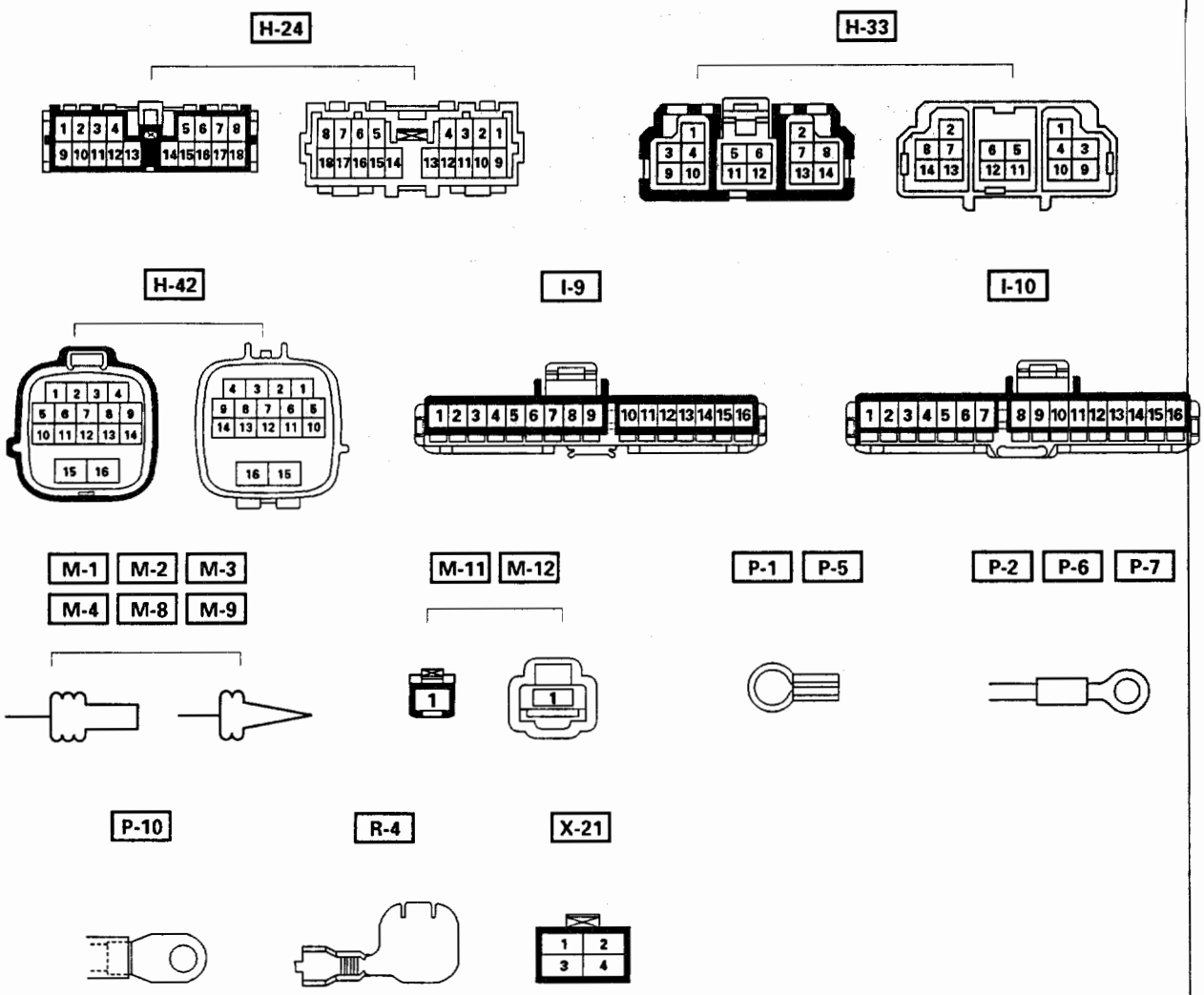
H-24
H-33
H-42
I-9
I-10
M-1
M-2
M-3
M-4
M-8
M-9
M-11
M-12
P-1
P-5
P-2
P-6
P-7
P-10
R-4
X-21

Fig. 8-232

REAR WHEEL ANTI-LOCK BRAKE SYSTEM (RWAL)

GENERAL DESCRIPTION

The circuit consists of the starter switch, stoplight switch (vehicle w/o cruise control), brake switch (vehicle w/cruise control). RWAL controller, RWAL speed sensor, RWAL valve, brake differential switch, 4WD switch, parking brake SW, indicator light (RWAL, 4WD, BRAKE), and test connector.

In this system, when the service brake is applied the RWAL controller judges the wheel rotation difference signals which have been sent from the RWAL speed sensor at the rear axle differential. The anti-lock valves control the brake fluid pressure which is applied to the rear wheels to prevent the wheels from locking.

When starting the engine, the RWAL indicator in the instrument panel lights up at the same time as the brake indicator to inform the driver that the system is operating normally. (The light goes off after two seconds.)

Refer to Section 5A3, "RWAL (REAR WHEEL ANTI-LOCK BRAKE SYSTEM)" for detail.

PARTS LOCATION - 1

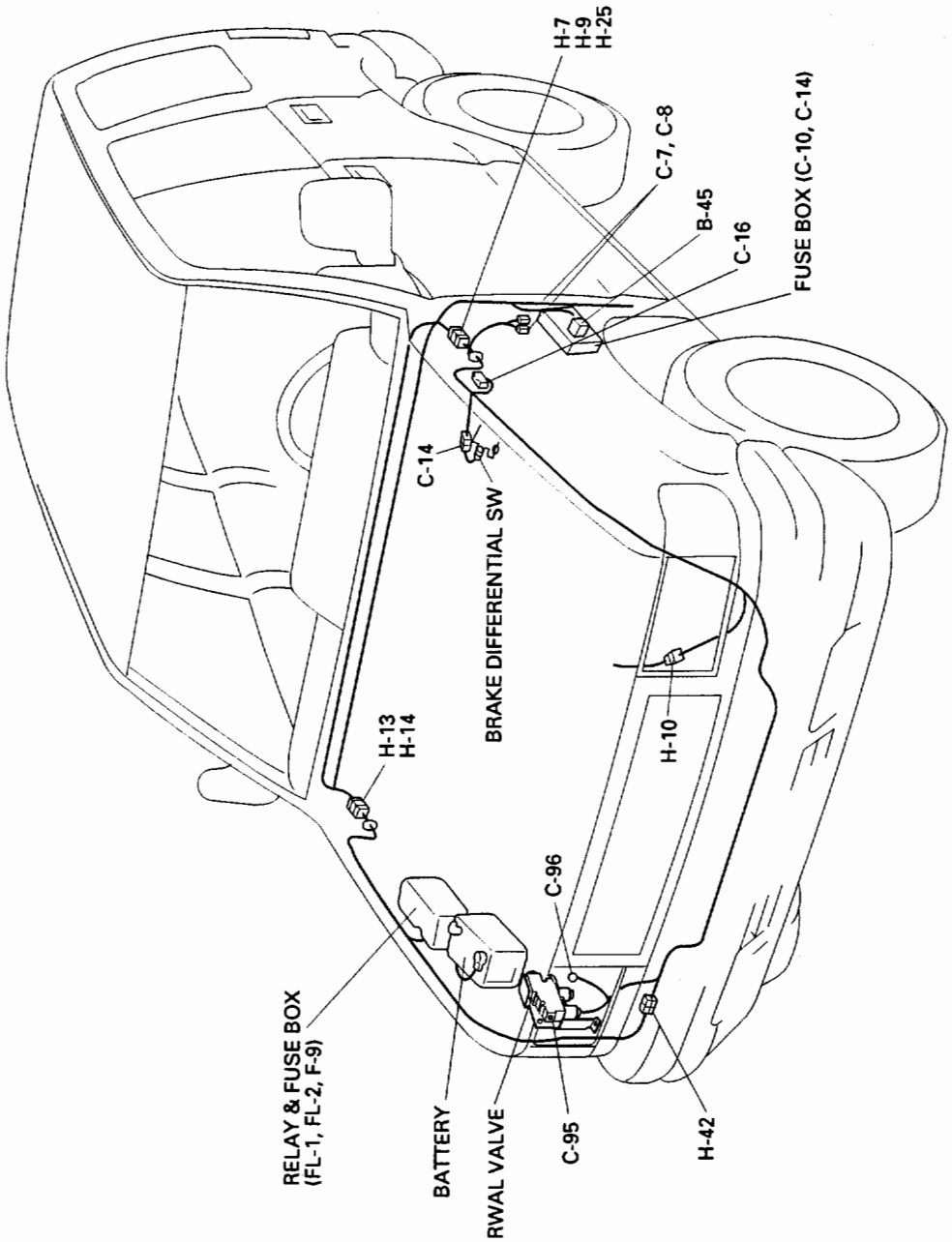

Fig. 8-233

PARTS LOCATION - 2

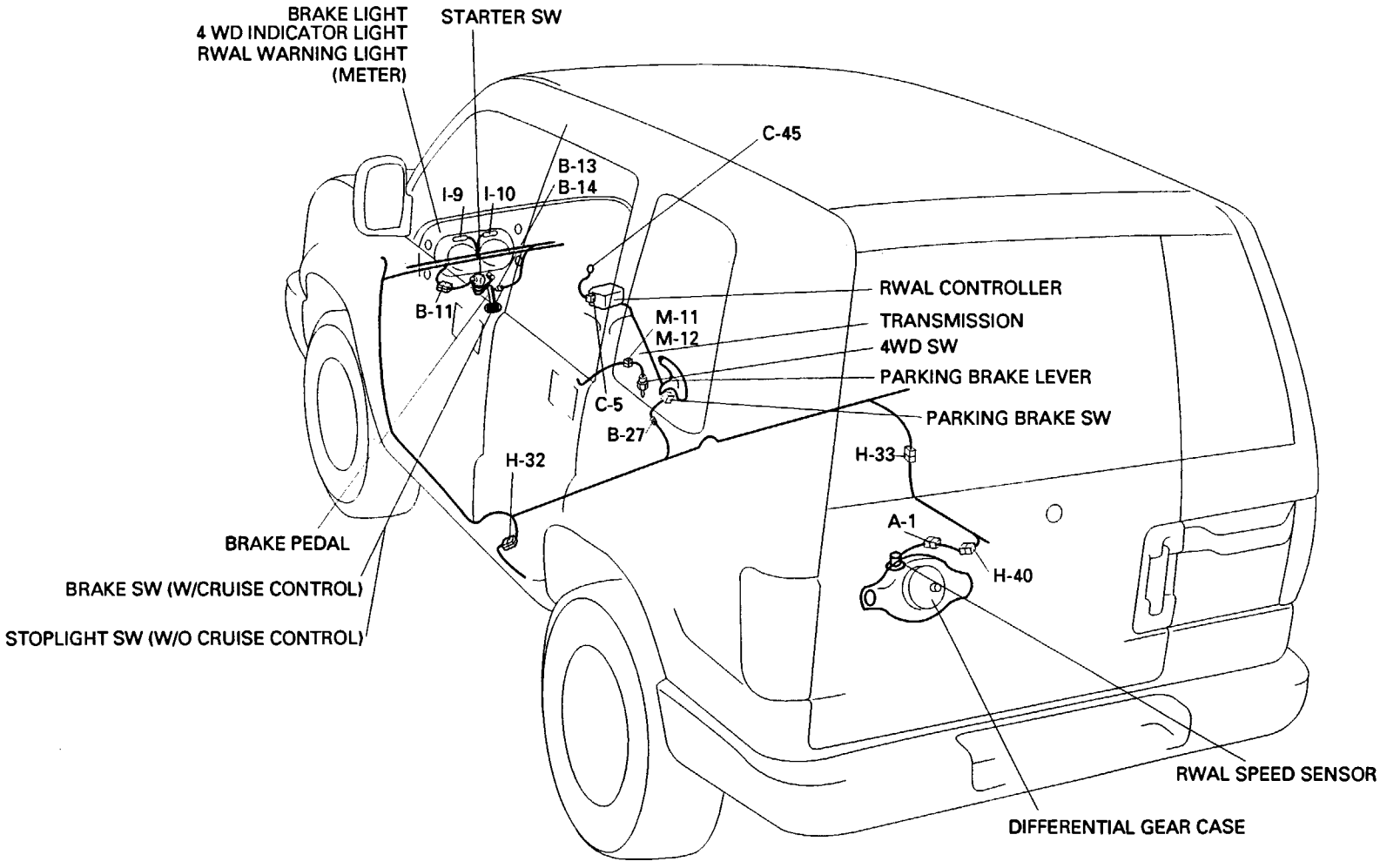

Fig. 8-234

CIRCUIT DIAGRAM

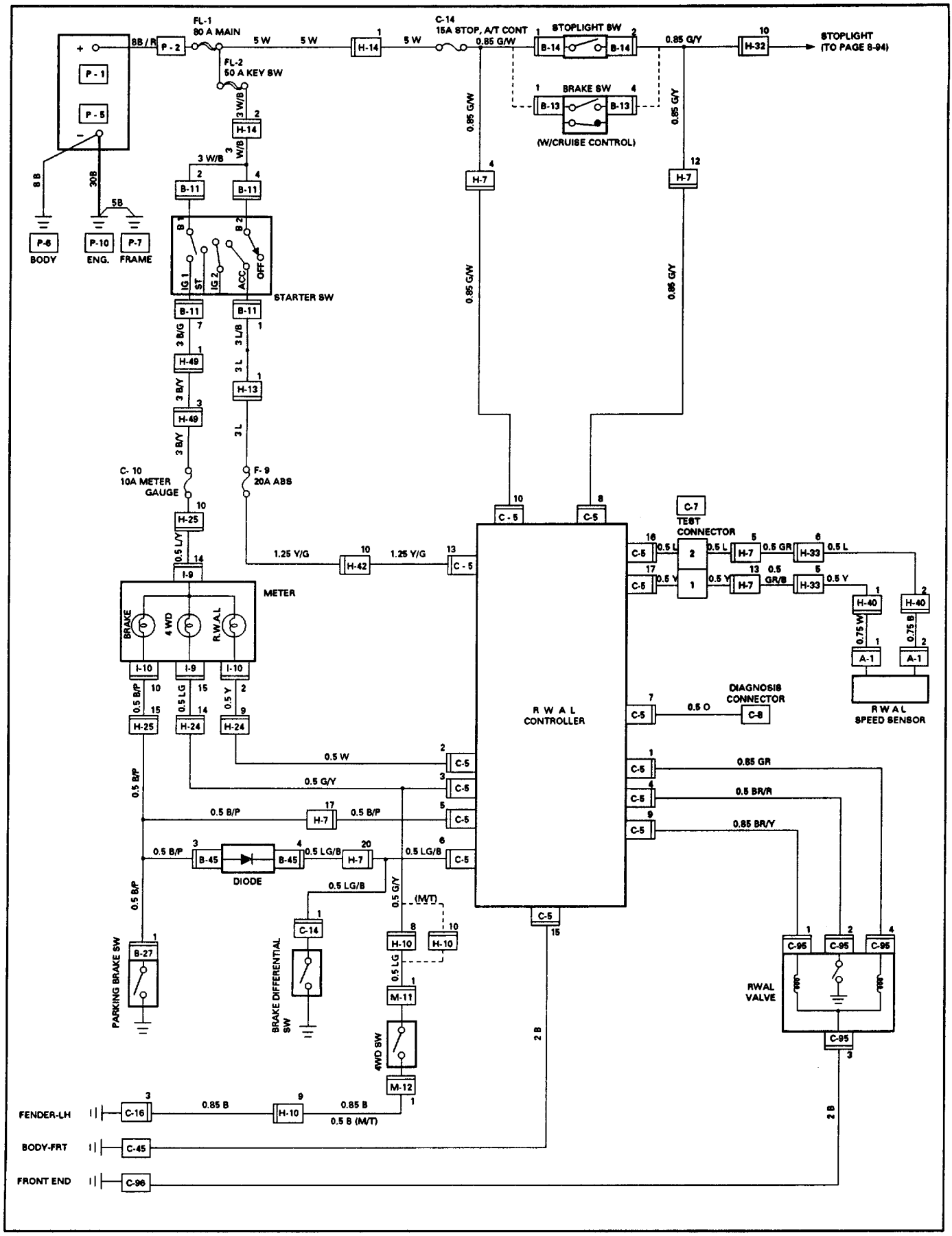

Fig. 8-235

CONNECTOR LIST

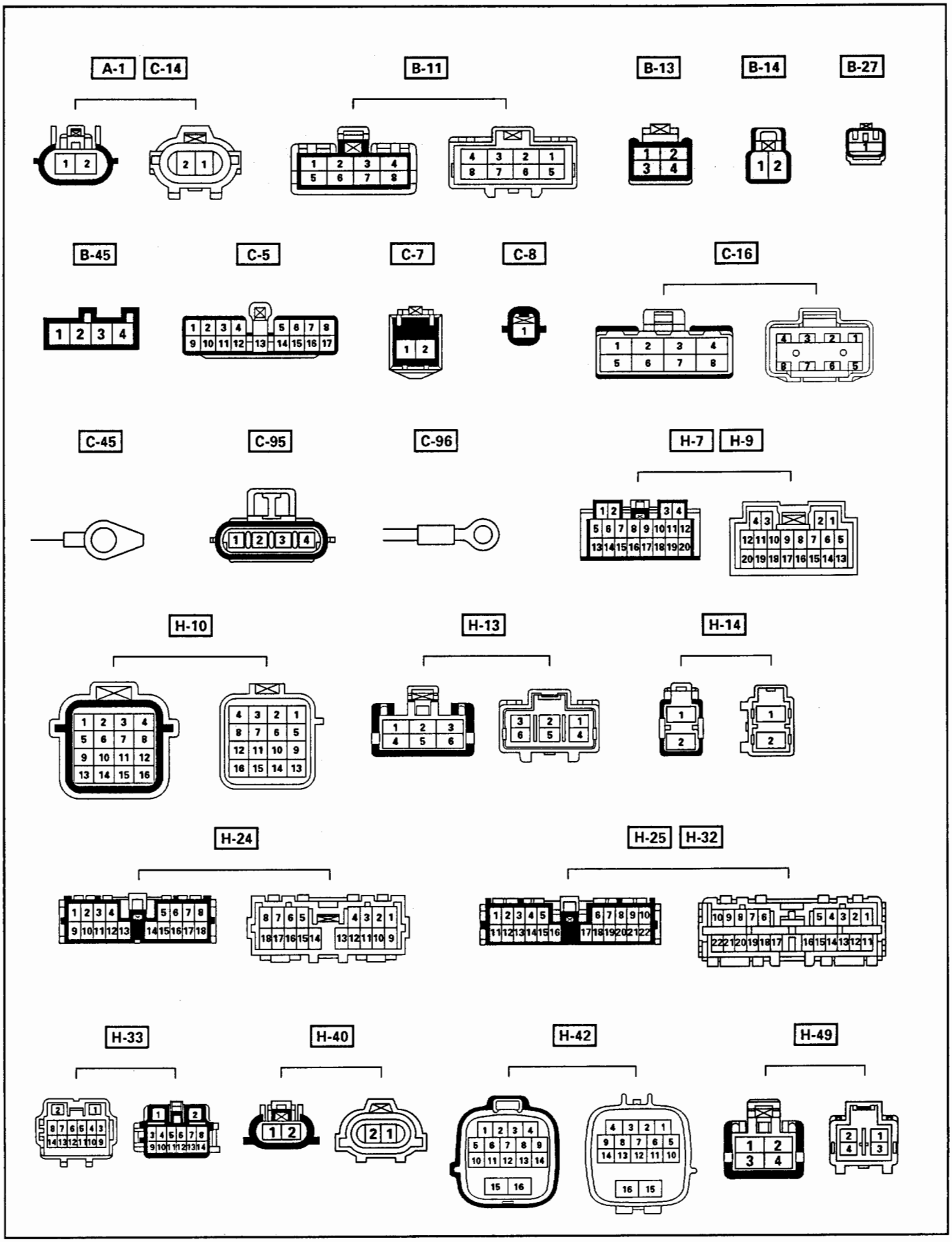

Fig. 8-236

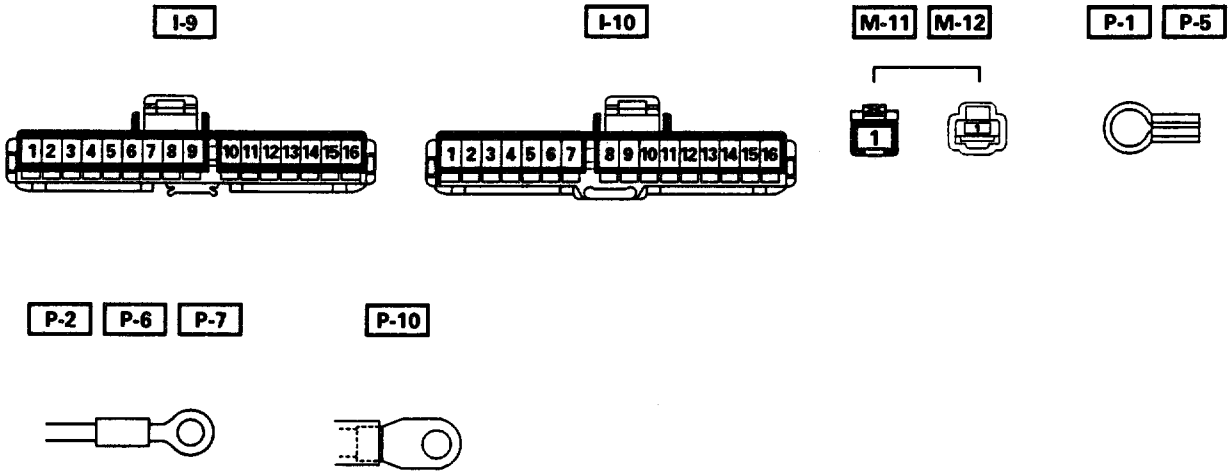
I-9
1 2 3 4 5 6 7 8 9 10 11 12 13 14 15 16
I-10
1 2 3 4 5 6 7 8 9 10 11 12 13 14 15 16
M-11
M-12
1
P-1
P-5
P-2
P-6
P-7
P-10

Fig. 8-237

MEMO

TRANSMISSION CONTROL MODULE (TCM)

GENERAL DESCRIPTION

The circuit consists of the starter switch, TCM, mode switch, brake switch, speed sensor, kick down switch, Power and Winter switches, Throttle Position (TP) sensor, Engine Control Module (ECM), barometer sensor, adapter case, main case, warning light (CHECK TRANS, A/T OIL TEMP) and indicator light (WINTER DRIVE, POWER DRIVE).

The TCM, based on the predetermined shifting characteristics and lockup operating valve, provides the optimum shifting control to the varying vehicle running condition. The following input signals are sent to the TCM: select lever position from the mode switch, running mode from the POWER & WINTER switches, throttle opening from the TP sensor, vehicle speed from the vehicle speed sensor and engine speed from the ECM are sent to the TCM. After receiving these signals, the TCM determines the vehicle running condition, and it sends output signals to each solenoid to control shifting.
When the TCC solenoid is engaged, the lockup mechanism operates.
The shift solenoid 2.3 and 1.2/3.4 selects the shift gear position.
The force motor controls the line pressure to improve shifting.
Also, when the TCM detects an abnormal signal from the transmission or sensor, it will cause the "CHECK TRANS" light on the warning box to flash in order to inform the driver of the malfunction.
Refer to section 7A "AUTOMATIC TRANSMISSION" for details.

PARTS LOCATION

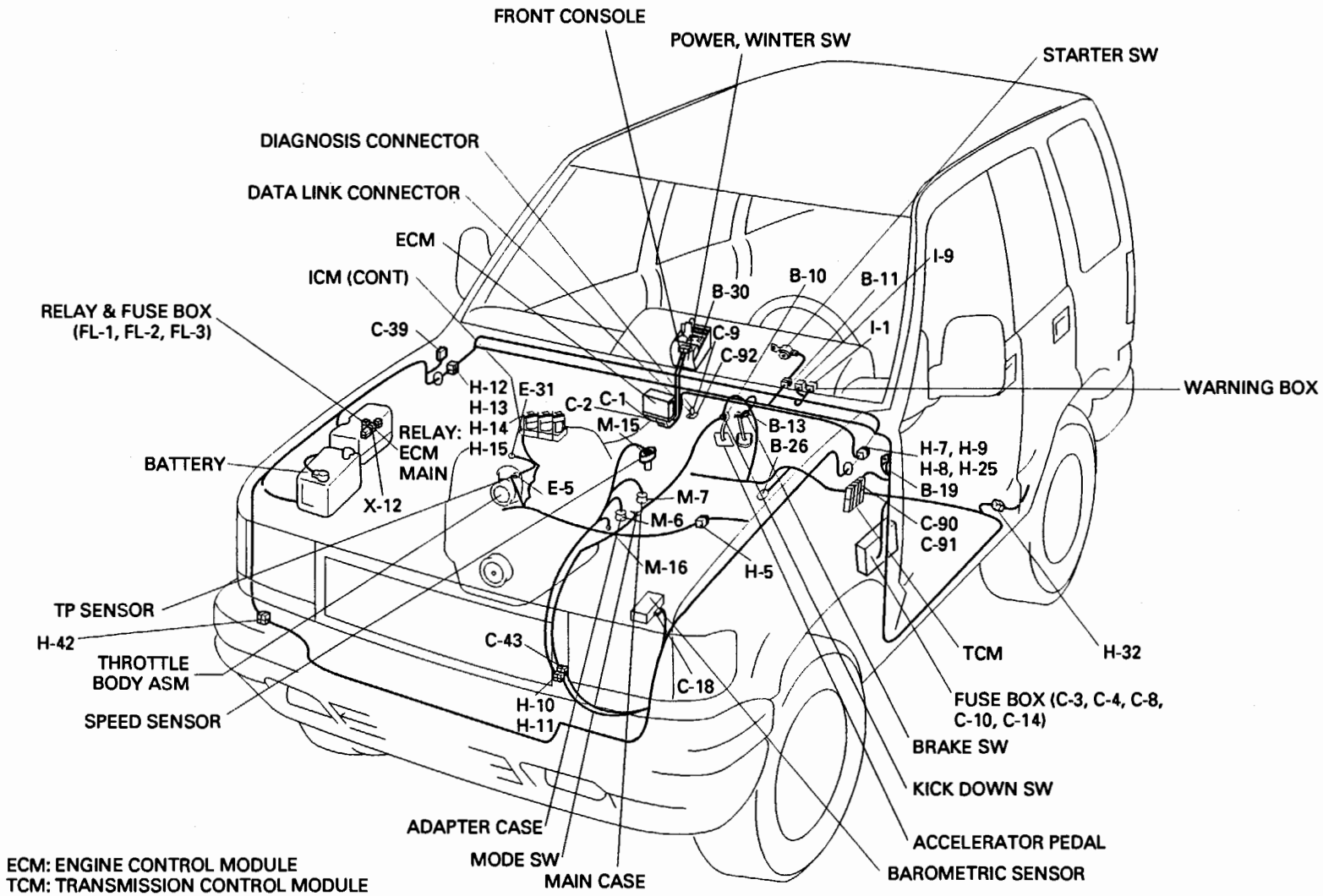

ECM: ENGINE CONTROL MODULE
TCM: TRANSMISSION CONTROL MODULE
TP : THROTTLE POSITION
ICM : IGNITION CONTROL MODULE

Fig. 8-238

CIRCUIT DIAGRAM

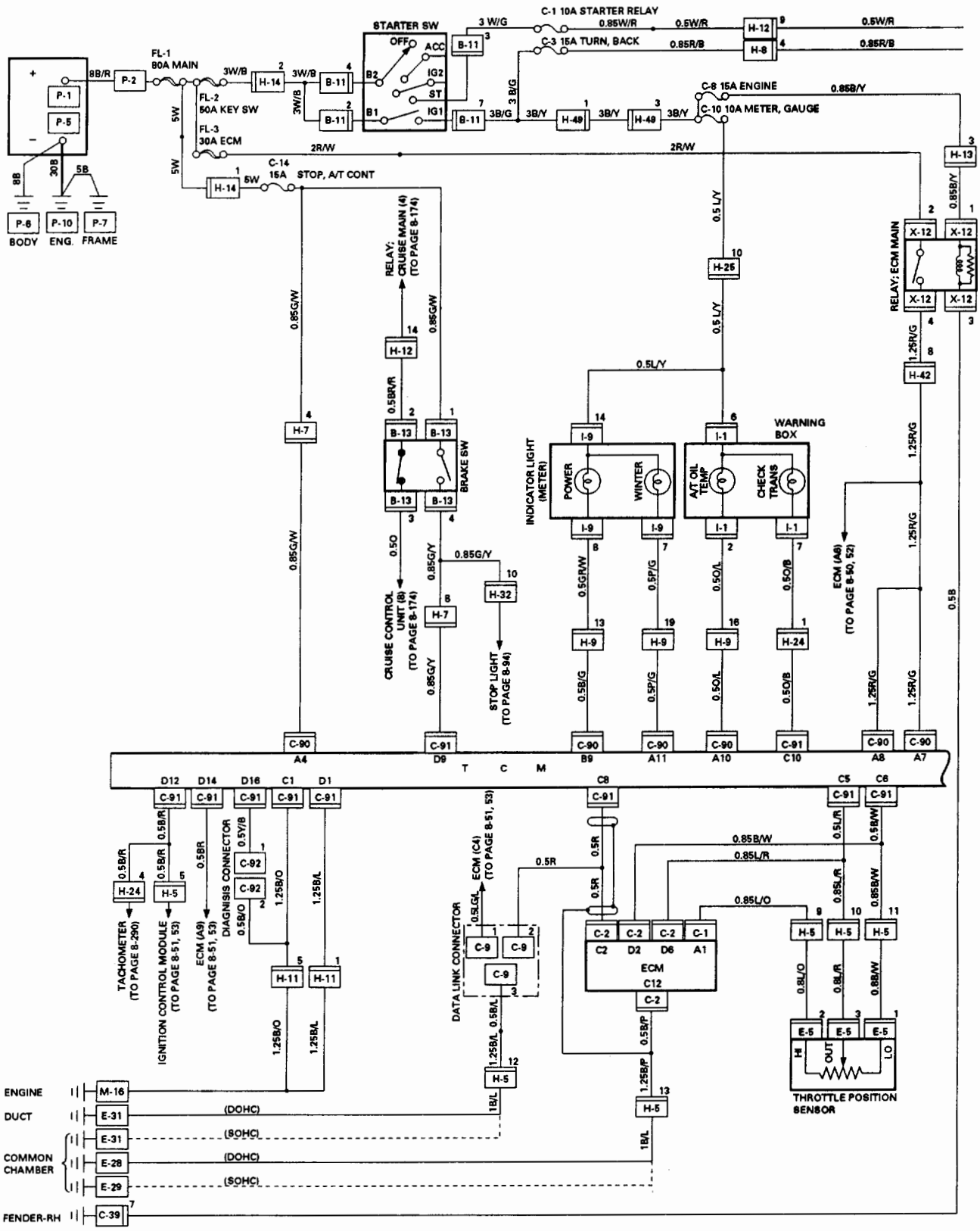

Fig. 8-239

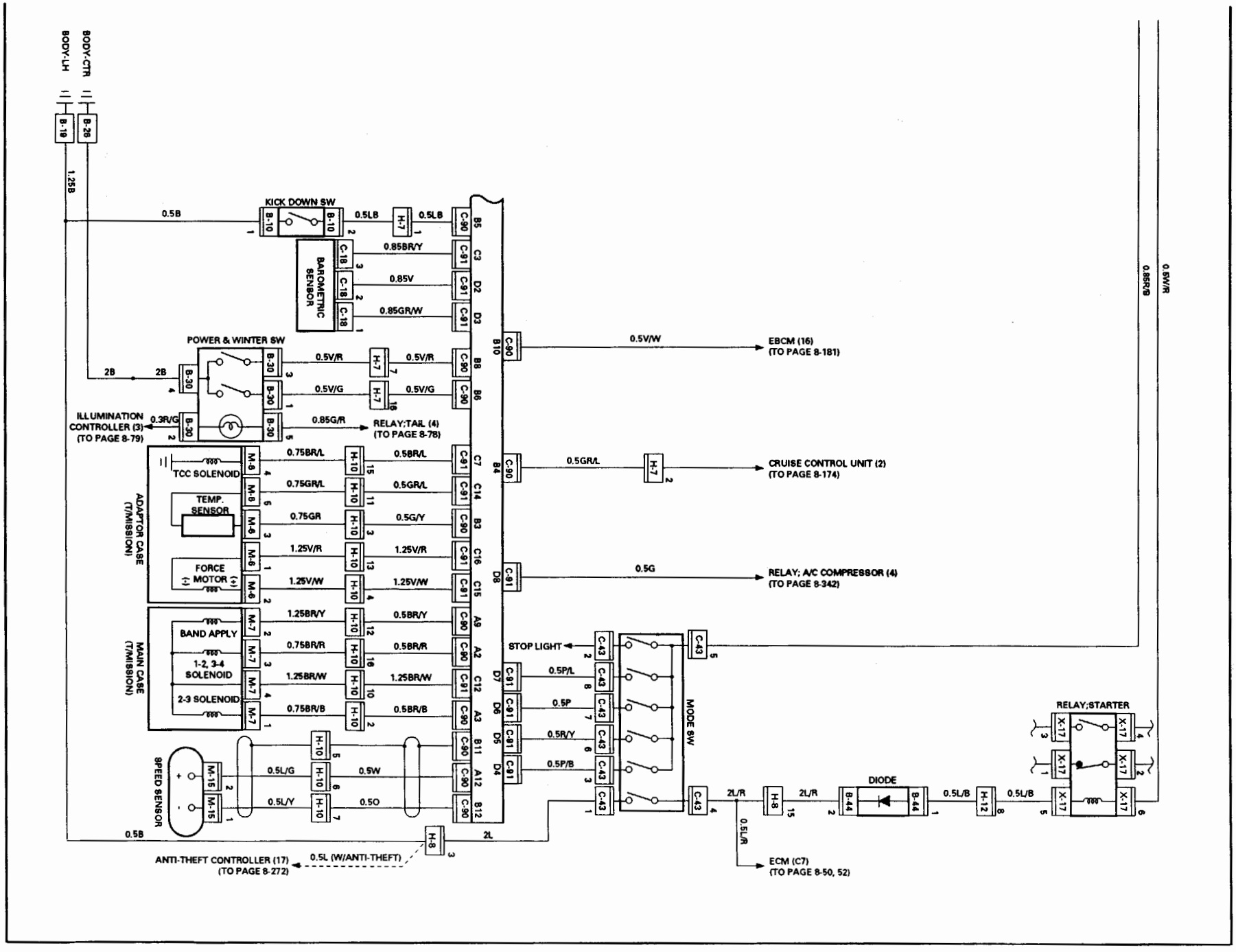
BODY-CTR
BODY-LH
B-19
B-26
1.25B
0.5B
KICK DOWN SW
B-10
0.5LB
H-7
C-90
B5
BAROMETRIC SENSOR
C-18
0.85BR/Y
0.85V
0.85GR/W
C-91
C3
D2
D3
POWER & WINTER SW
B-30
2B
0.5V/R
0.5V/G
0.85G/R
ILLUMINATION CONTROLLER (3)
(TO PAGE 8-79)
0.3R/G
RELAY;TAIL (4)
(TO PAGE 8-78)
B8
B6
B10
0.5V/W
EBCM (16)
(TO PAGE 8-181)
B4
0.5GR/L
CRUISE CONTROL UNIT (2)
(TO PAGE 8-174)
D8
0.5G
RELAY; A/C COMPRESSOR (4)
(TO PAGE 8-342)
ADAPTOR CASE (T/MISSION)
TCC SOLENOID
TEMP. SENSOR
FORCE MOTOR (+)
M-6
0.75BR/L
0.75GR/L
0.75GR
1.25V/R
1.25V/W
H-10
0.5BR/L
0.5GR/L
0.5G/Y
C7
C14
B3
C16
C15
MAIN CASE (T/MISSION)
BAND APPLY
1-2, 3-4 SOLENOID
2-3 SOLENOID
M-7
1.25BR/Y
0.75BR/R
1.25BR/W
0.75BR/B
0.5BR/Y
0.5BR/R
0.5BR/B
A9
A2
C12
A3
SPEED SENSOR
M-15
0.5L/G
0.5L/Y
0.5W
0.5O
B11
A12
B12
STOP LIGHT
C-43
0.5P/L
0.5P
0.5R/Y
0.5P/B
D7
D6
D5
D4
MODE SW
2L/R
H-8
DIODE
B-44
0.5L/B
H-12
RELAY;STARTER
X-17
0.5V/R
0.85R/B
0.5L/R
ECM (C7)
(TO PAGE 8-50, 52)
2L
ANTI-THEFT CONTROLLER (17)
(TO PAGE 8-272)
0.5L (W/ANTI-THEFT)

CONNECTOR LIST

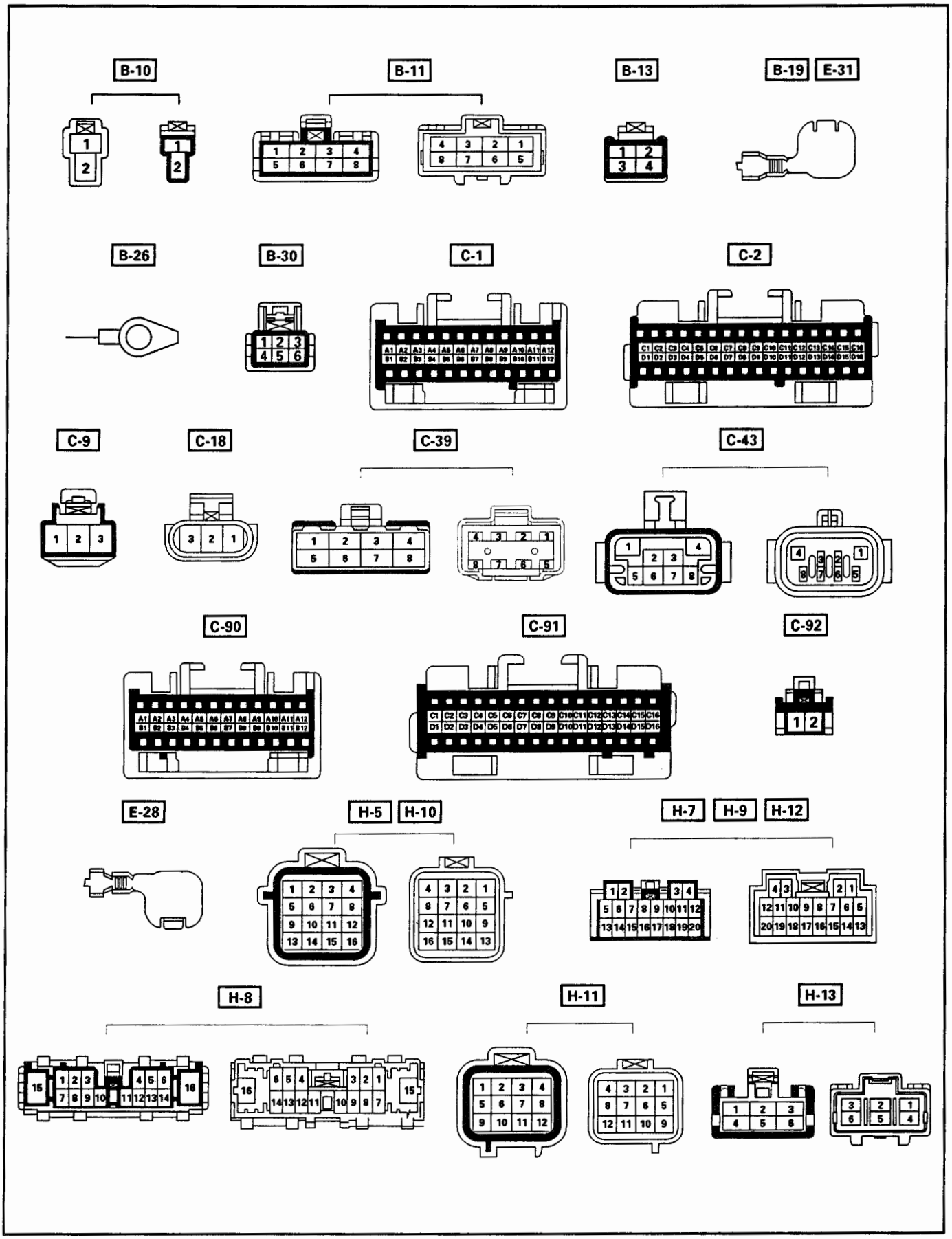

Fig. 8-240

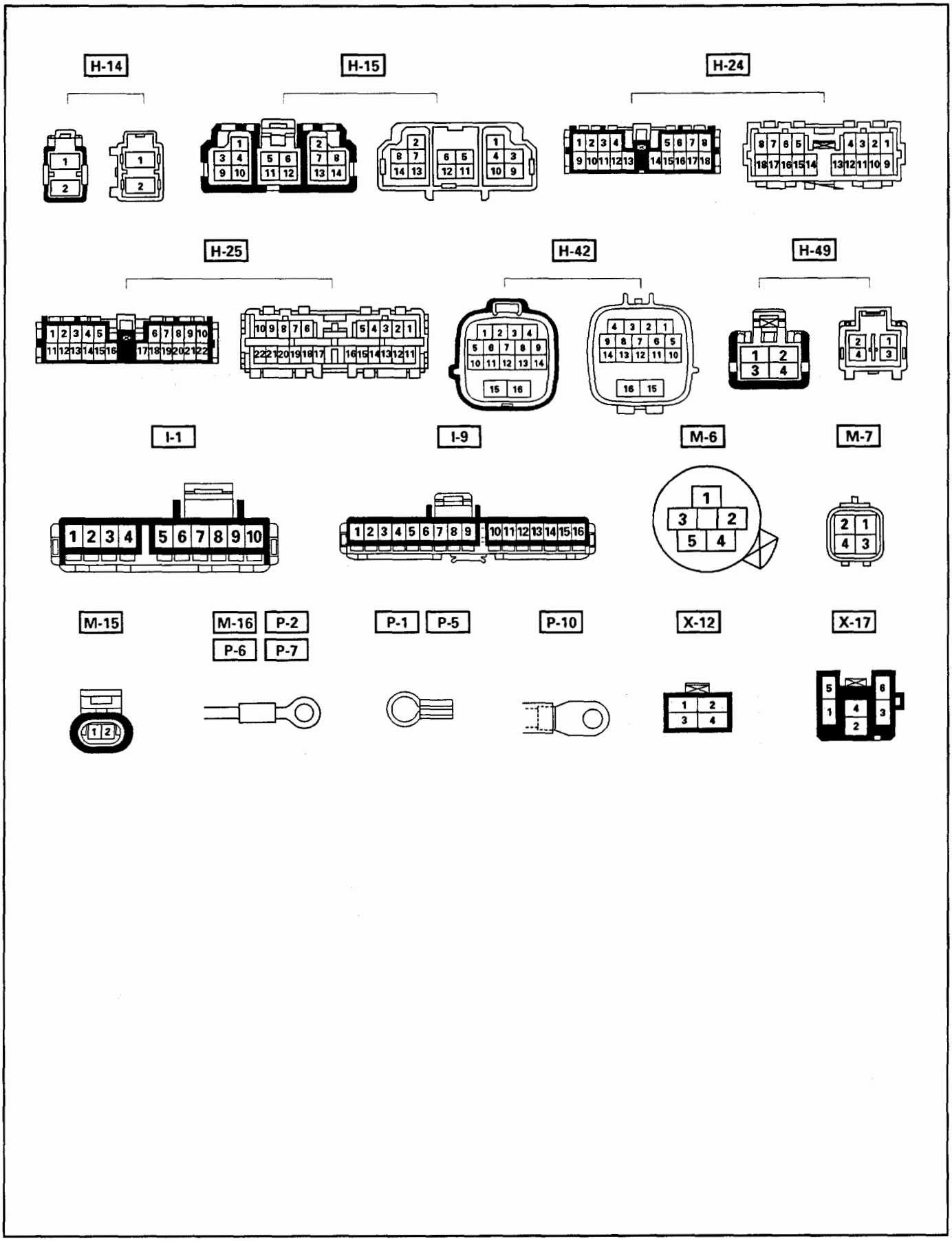
H-14
H-15
H-24
H-25
H-42
H-49
I-1
I-9
M-6
M-7
M-15
M-16
P-2
P-6
P-7
P-1
P-5
P-10
X-12
X-17

Fig. 8-241

ENGINE CONTROL MODULE MAIN RELAY

INSPECTION

Check to see if there is any continuity between the relay terminals. (Fig. 8-242)
Replace the relay when the result of inspection is found abnormal.

② – ④	No continuity
(When battery voltage is applied between ① and ③)	
② – ④	Continuity

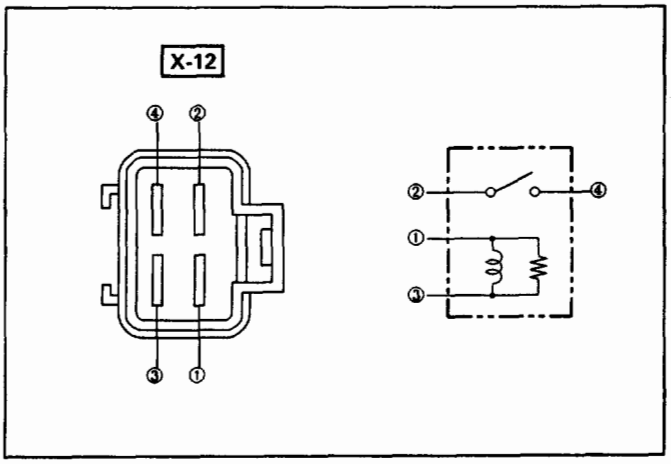

Fig. 8-242

NOTE:
For the relay removal, refer to "Connector Handling" in the "NOTES FOR WORKING ON ELECTRICAL ITEMS" in this section.

MEMO

A/T SHIFT LOCK

GENERAL DESCRIPTION

This circuit consists of the starter switch, stoplight switch (vehicle w/o cruise control), brake switch (vehicle w/cruise control), shift lock controller, stoplight, backup light and mode switch.
The shift lock system is designed not to allow the shift lever to be shifted from the "P" position to any other position without depressing the brake pedal while the starter switch is turned on.
The solenoid pin at the lower portion of the shift lever retracts when the brake pedal is not depressed, thus causing the shift lever cam to be locked by the link lever.

INTERNAL CIRCUIT OF SHIFT LEVER

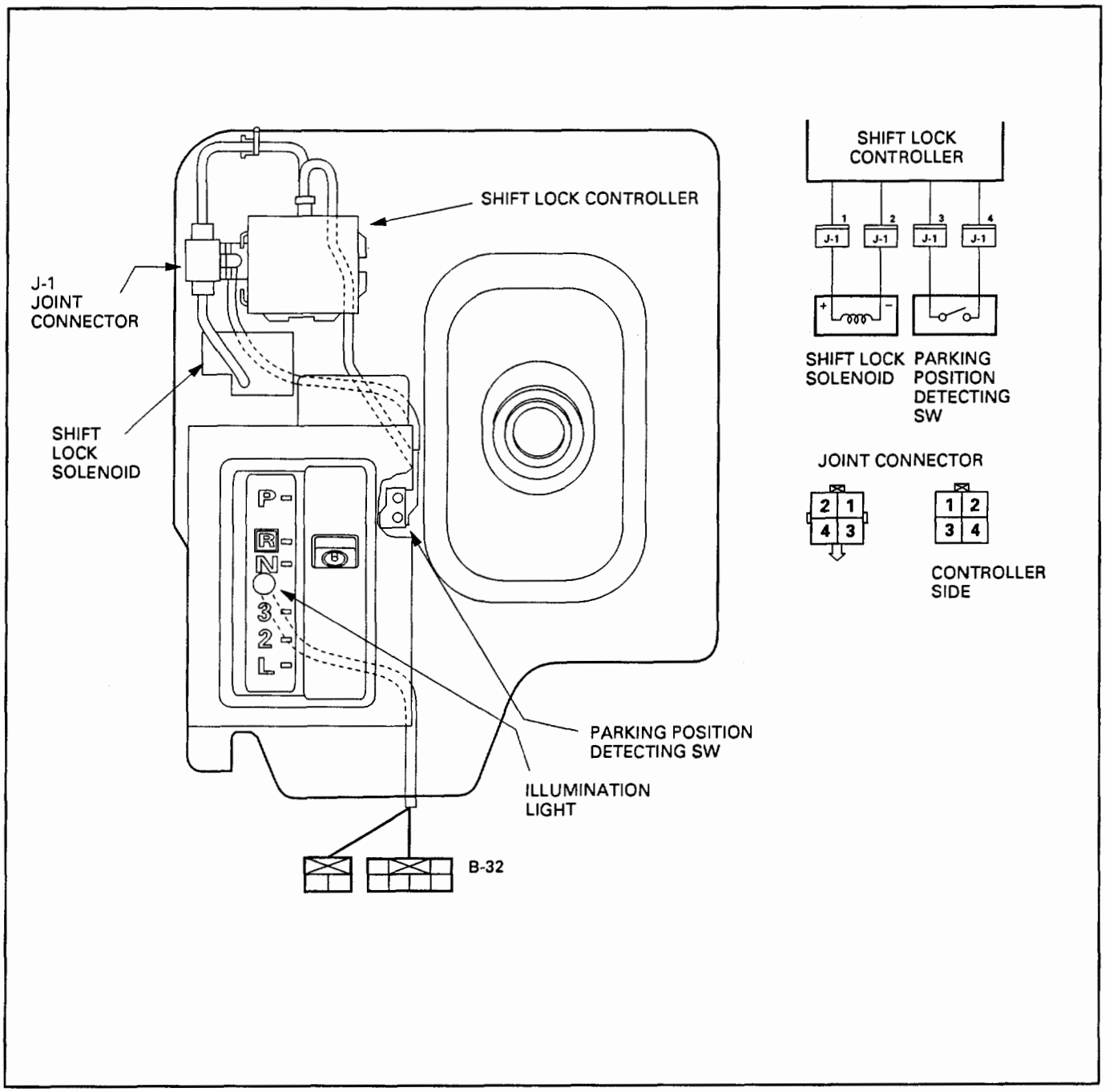

Fig. 8-243

PARTS LOCATION

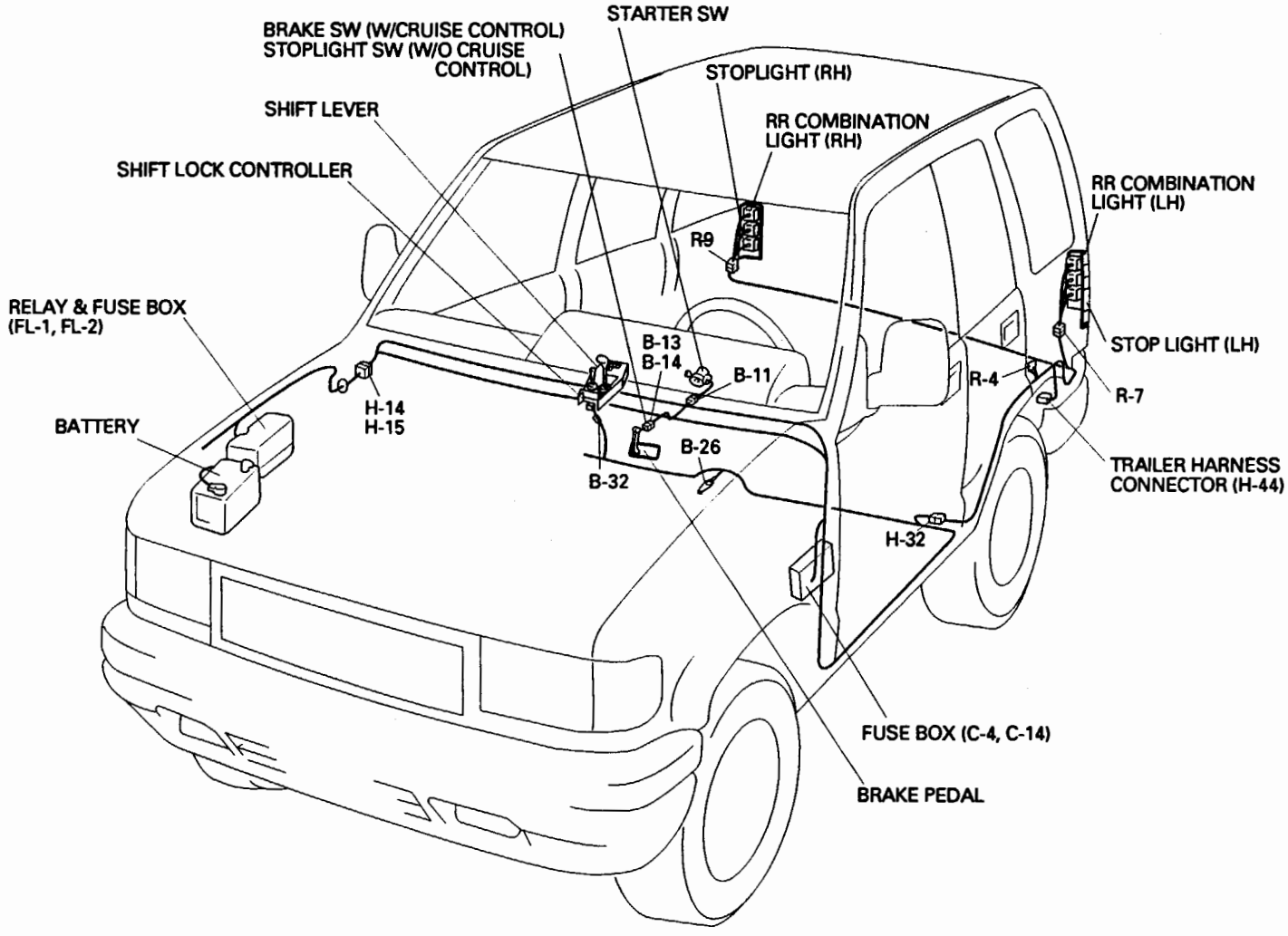

Fig. 8-244

CIRCUIT DIAGRAM

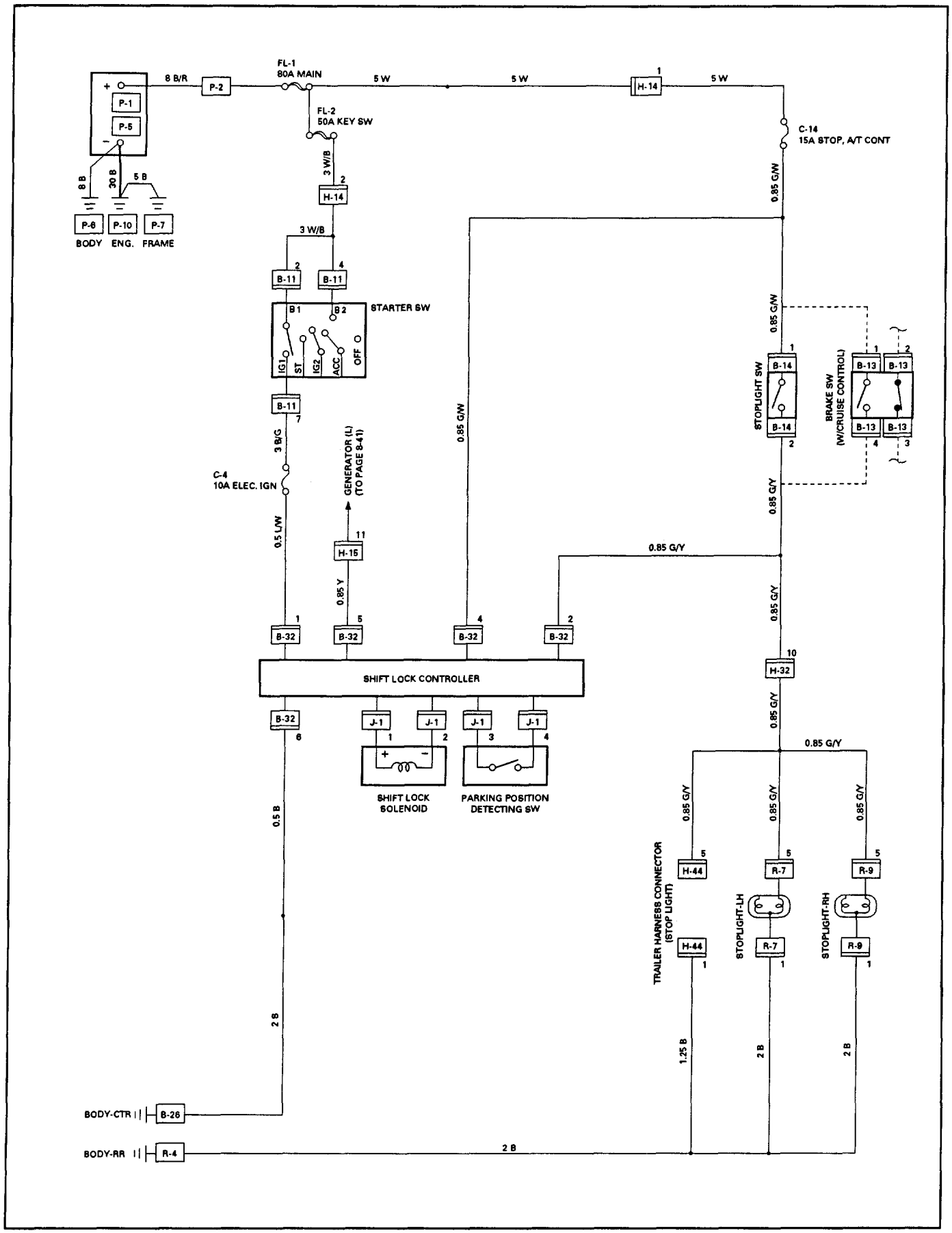

Fig. 8-245

CONNECTOR LIST

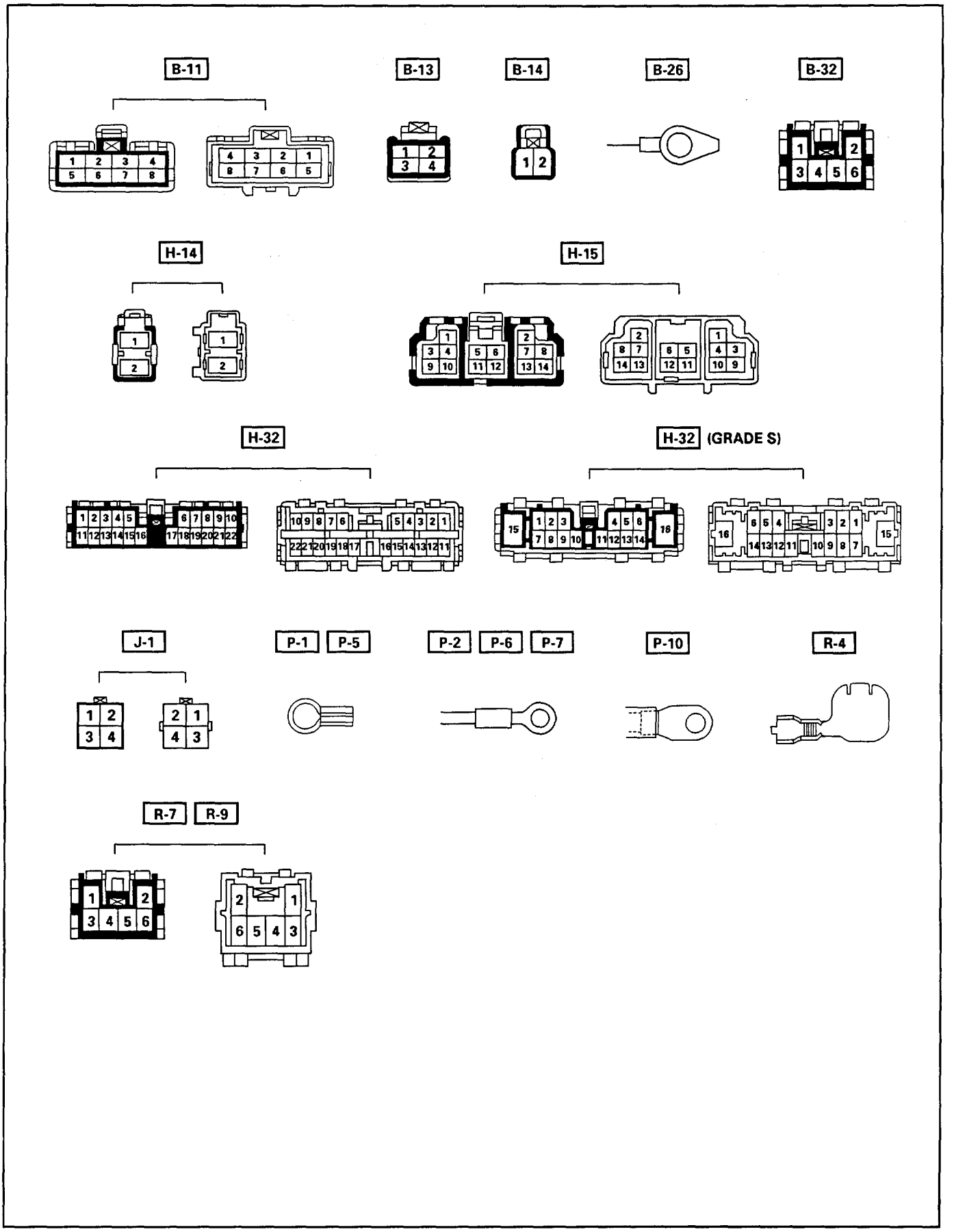

Fig. 8-246

STARTER SWITCH
Refer to "START AND CHARGING" in this section.

STOPLIGHT

STOPLIGHT SWITCH

BRAKE SWITCH
Refer to "STOPLIGHT AND REAR DEFOGGER" in this section.

SHIFT LOCK CONTROLLER
Refer to the shift lock controller in Section 7A "AUTOMATIC TRANSMISSION."

SHIFT LOCK SOLENOID

INSPECTION

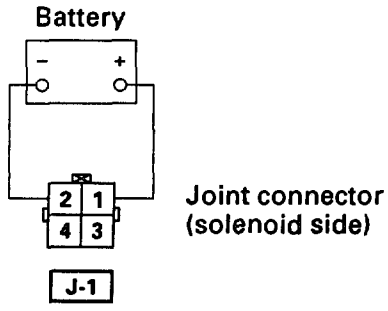

Fig. 8-247

Connect the joint connector terminal 1 [J-1] to the battery (+) terminal and 2 [J-1] to the (–) terminal and check to see if the solenoid works. (Fig. 8-247)
Replace the solenoid when the result of inspection is found abnormal.

PARKING POSITION DETECTING SWITCH

INSPECTION

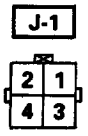

Shift lever position \ Terminal No.	3	4
P	○	○
Other than P		

Fig. 8-248

Check the continuity between the joint connector terminals. (Fig. 8-248)
Repair or replace the switch when the result of inspection is found abnormal.

WINDSHIELD WIPER/WASHER AND REAR WIPER/WASHER

GENERAL DESCRIPTION

The circuit consists of the starter switch, wiper & washer switches, wiper motors, washer motors and intermittent relays for both the windshield and some models the rear wipers.
When the wiper & washer switch is turned on with the starter switch on, the battery voltage is applied to the wiper motor to activate the wiper.
The washer motor squirts glass cleaning fluid while the washer switch is being pushed. The intermittent relay is used to control motion of the wiper.

OPERATION OF WINDSHIELD WIPER MOTOR (When wiper & washer SW is at "LO" or "INT" position)

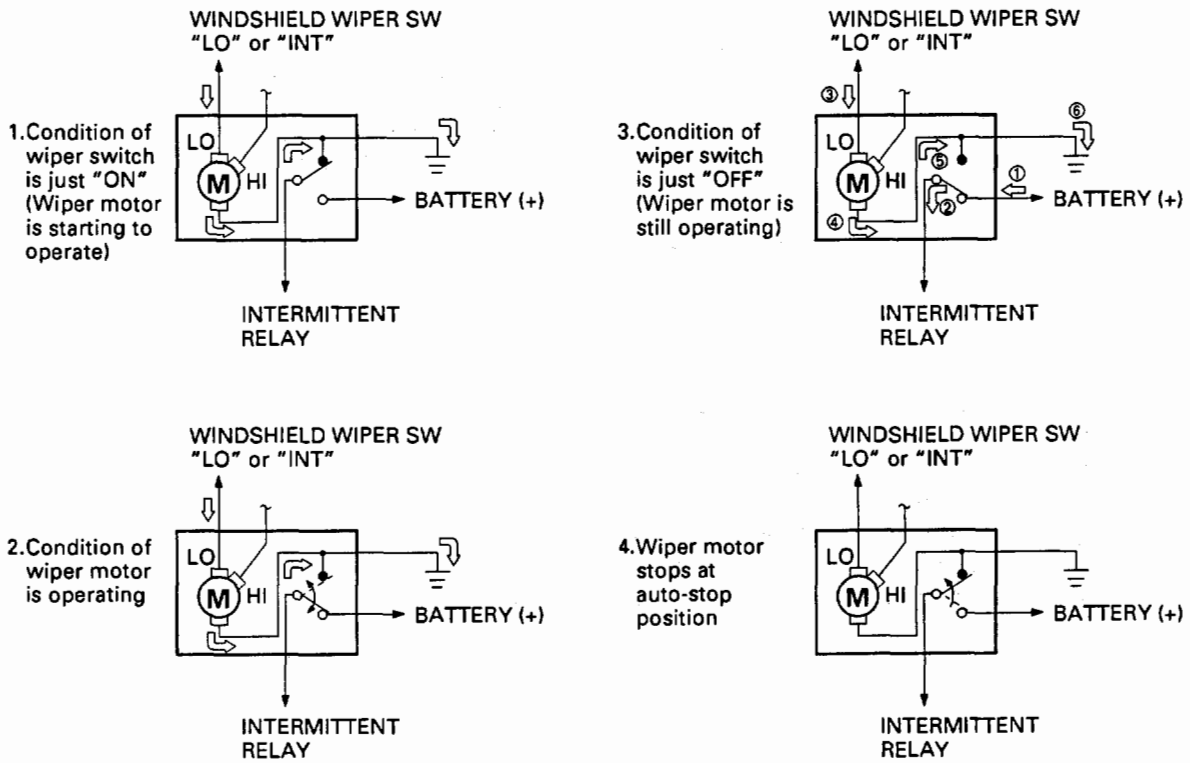

NOTE: Arrow marks " ⇨ " indicate the direction of current

Fig. 8-249

PARTS LOCATION - WINDSHIELD WIPER/WASHER

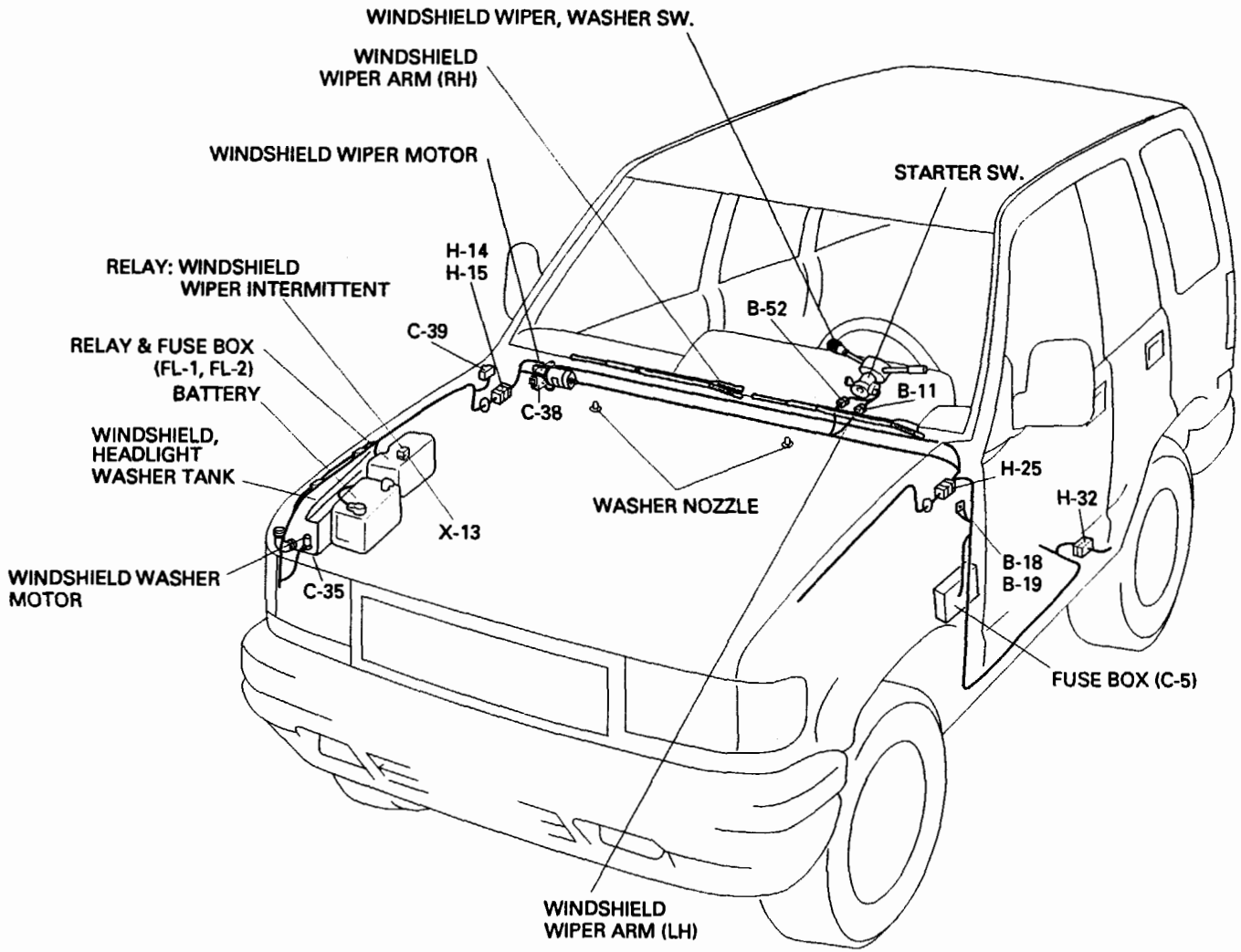

Fig. 8-250

PARTS LOCATION - REAR WIPER/WASHER

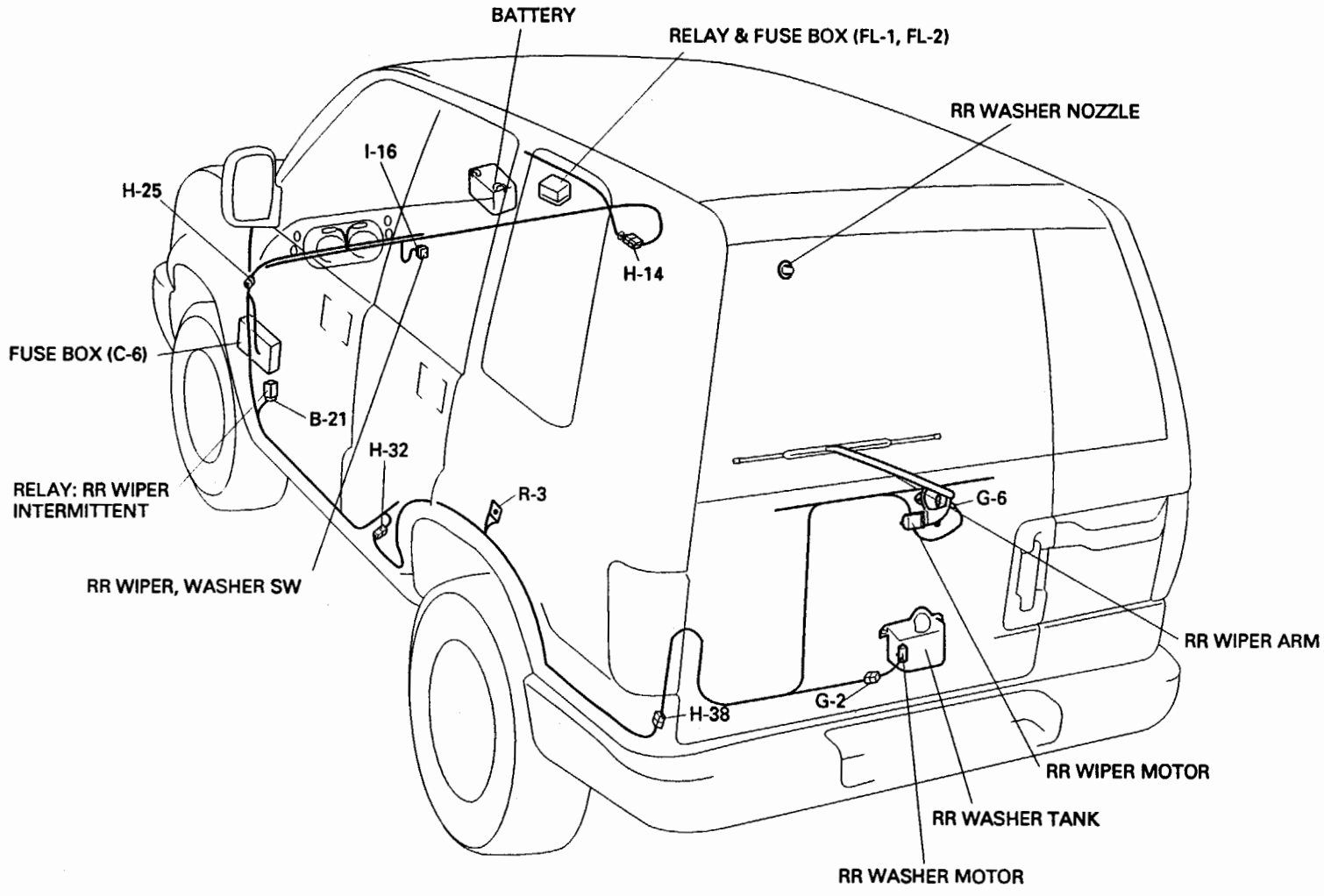

Fig. 8-251

CIRCUIT DIAGRAM

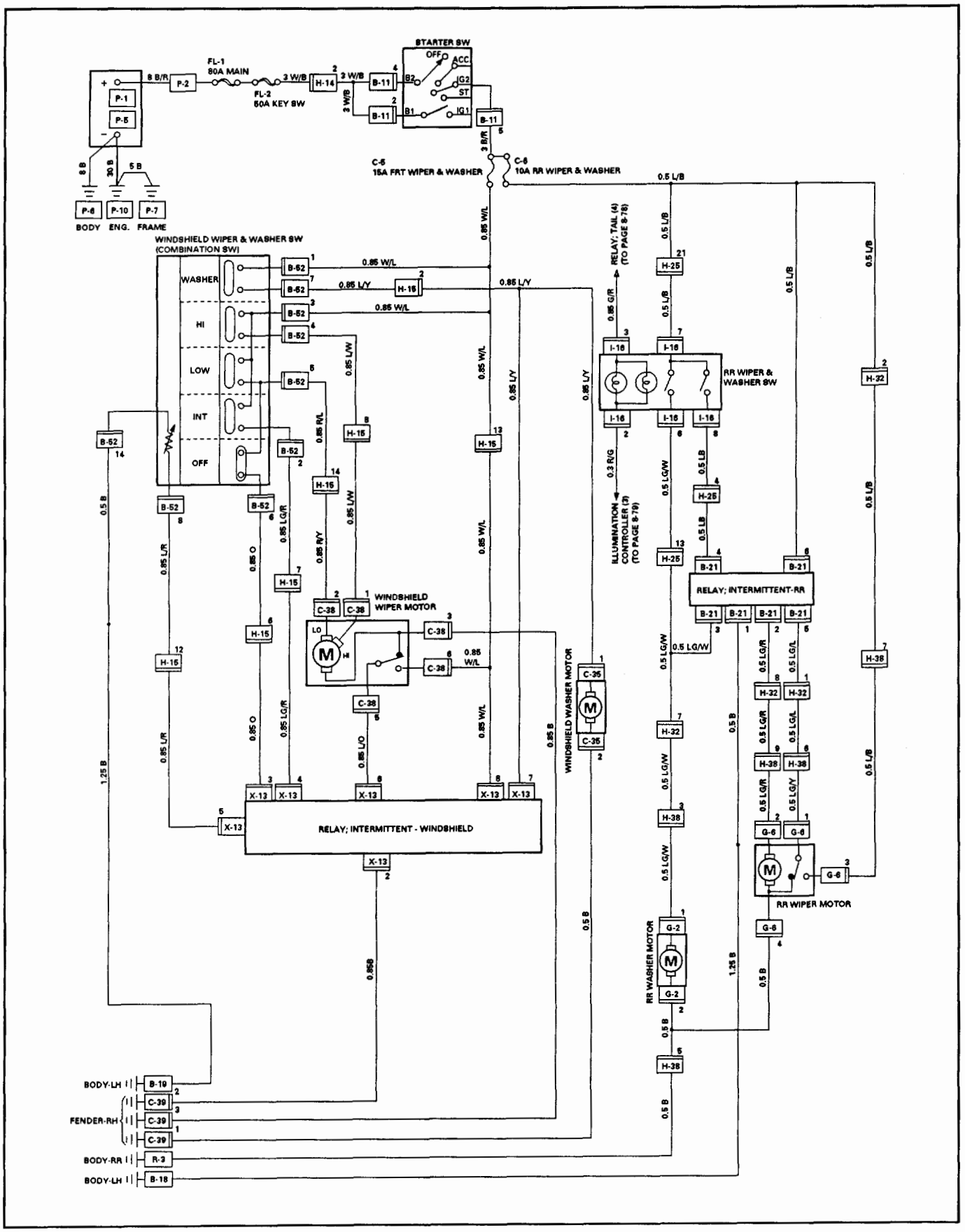

Fig. 8-252

CONNECTOR LIST

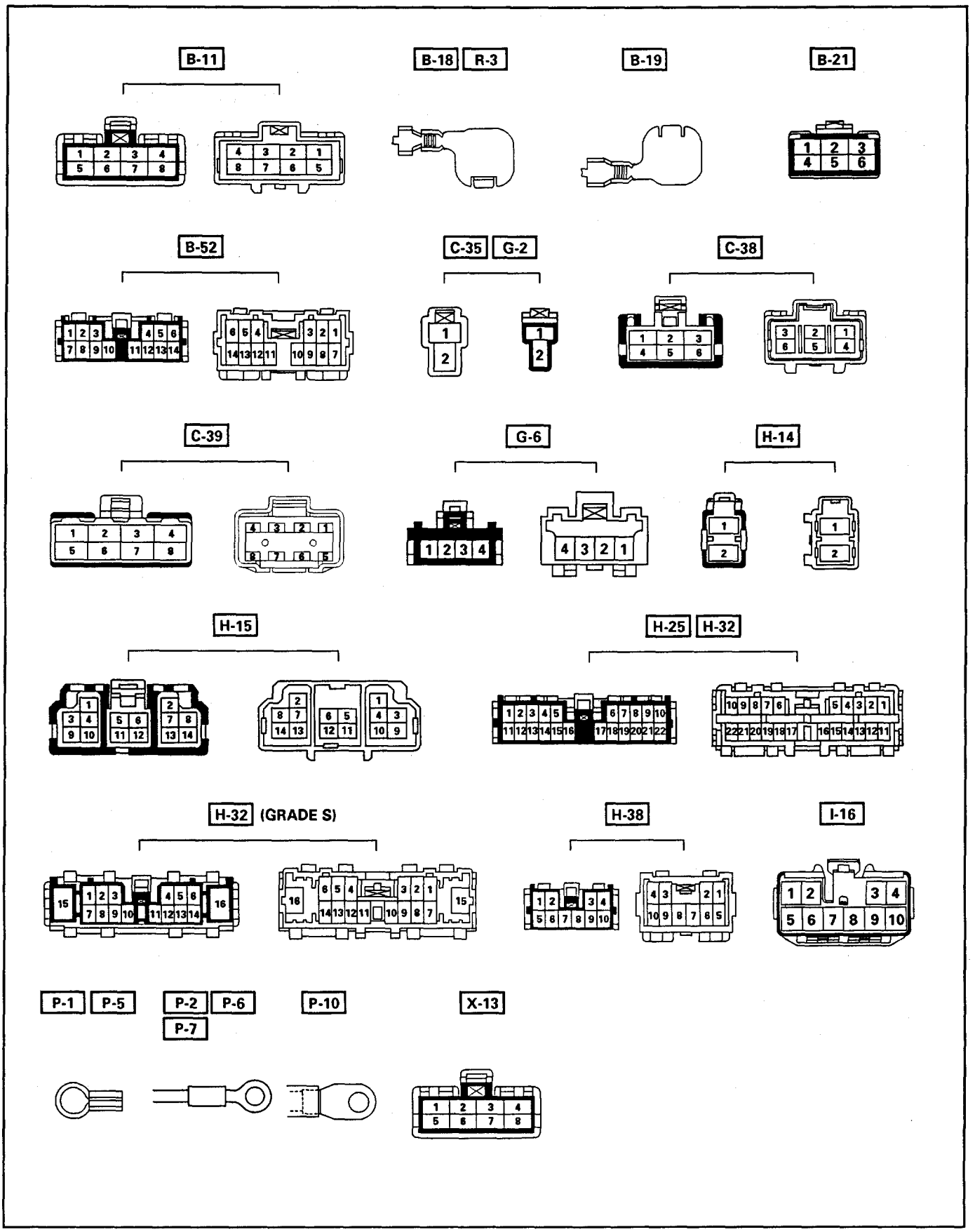

Fig. 8-253

DIAGNOSIS

QUICK CHART FOR CHECK POINTS

1. Windshield wiper/washer

Trouble mode \ Check point	Fuse C-5 (15A)	Wiper & washer SW	Intermittent relay	Wiper motor	Washer motor	Cable harness
1-1 Windshield wiper does not operate at any position	○ (1)	○ (3)		○ (4)		○ (2)
1-2 Windshield wiper does not operate at "INT" position		○ (1)	○ (3)			○ (2)
1-3 Intermittent interval does not change		○ (1)	○ (3)			○ (2)
1-4 Windshield wiper does not operate at "LO" position		○ (1)		○ (3)		○ (2)
1-5 Windshield wiper does not operate at "HI" position		○ (1)		○ (2)		○ (3)
1-6 Auto-stop function of the windshield wiper motor does not operate		○ (1)	○ (4)	○ (2)		○ (3)
1-7 Rotation of the windshield wiper motor does not stop		○ (1)		○ (2)		
1-8 Windshield washer motor does not operate	○ (1)	○ (2)			○ (4)	○ (3)

NOTE: Figure in parenthesis"( )" indicates the order of inspection.

2. Rear wiper/washer

Trouble mode \ Check point	Fuse C-6 (10A)	Wiper & washer SW	Rear wiper motor	Washer motor	Intermittent relay	Cable harness
2-1 Rear wiper motor does not operate	○ (1)	○ (2)	○ (4)		○ (5)	○ (3)
2-2 Auto-stop function of the rear wiper motor does not operate			○ (1)		○ (3)	○ (2)
2-3 Rear wiper motor does not operate at WIPER position		○ (1)			○ (3)	○ (2)
2-4 Rear wiper motor does not operate at WIPER & WASHER position		○ (1)			○ (3)	○ (2)
2-5 Rotation of the rear wiper motor does not stop		○ (1)	○ (2)			
2-6 Rear washer motor does not operate		○ (1)	○ (2)	○ (4)		○ (3)

NOTE: Figure in parenthesis"( )" indicates the order of inspection.

1-1. WINDSHIELD WIPER DOES NOT OPERATE AT ANY SWITCH POSITION

- IS FUSE C-5 (15A) NORMAL?

YES

- DISCONNECT THE CONNECTOR OF THE WINDSHIELD WIPER & WASHER SWITCH
- TURN THE STARTER SWITCH ON
- IS THERE A BATTERY VOLTAGE APPLIED BETWEEN THE SWITCH HARNESS SIDE CONNECTOR 1 [B-52] AND THE GROUND?

NO

REPLACE THE FUSE

YES

- IS CONTINUITY IN THE WINDSHIELD WIPER & WASHER SWITCH NORMAL?

NO

REPAIR A POOR CONNECTION OF THE CONNECTORS OR AN OPEN CIRCUIT BETWEEN THE FUSE C-5 (15A) AND 1 [B-52]

YES

- IS 3 [C-39] GROUNDED SECURELY?

NO

REPAIR OR REPLACE THE SWITCH

YES

- DISCONNECT THE CONNECTOR OF THE WINDSHIELD WIPER MOTOR
- WITH THE MOTOR CONNECTOR 2 [C-38] CONNECTED TO THE BATTERY (+) TERMINAL, AND THE CONNECTOR 3 [C-38] TO THE (–) TERMINAL, DOES THE MOTOR ROTATE AT A LOW SPEED?
- AND WITH THE CONNECTOR 1 [C-38] CONNECTED TO THE (+) TERMINAL, DOES THE MOTOR ROTATE AT A HIGH SPEED?

NO

GROUND IT SECURELY

YES

REPAIR A POOR CONNECTION OF THE CONNECTORS OR AN OPEN CIRCUIT BETWEEN 3 [C-38] AND 3 [C-39]

NO

REPAIR OR REPLACE THE WINDSHIELD WIPER MOTOR

1-2. WINDSHIELD WIPER DOES NOT OPERATE AT "INT" POSITION

- DISCONNECT THE CONNECTORS OF THE WINDSHIELD WIPER & WASHER SWITCH
- SET THE SWITCH AT THE "INT" POSITION
- IS THERE CONTINUITY BETWEEN THE SWITCH CONNECTOR TERMINALS 1 [B-52] - 2 [B-52]

YES

- IS [B-19] GROUNDED SECURELY

NO

REPAIR OR REPLACE THE WINDSHIELD WIPER & WASHER SWITCH

YES

- IS THERE CONTINUITY BETWEEN THE WINDSHIELD WIPER & WASHER SWITCH HARNESS SIDE CONNECTOR TERMINALS THE 14 [B-52] -[B-19] ?

NO

GROUND IT SECURELY

YES

- DISCONNECT THE CONNECTOR OF THE WINDSHIELD WIPER INTERMITTENT RELAY
- SET THE SWITCH AT THE "INT" POSITION AND TURN THE STARTER SWITCH ON
- IS THE BATTERY VOLTAGE APPLIED BETWEEN 4 [X-13] AND THE GROUND?

NO

REPAIR A POOR CONNECTION OF THE CONNECTORS OR AN OPEN CIRCUIT BETWEEN 14 [B-52] AND [B-19]

YES

- IS THERE CONTINUITY BETWEEN 5 [X-13] AND 8 [B-52] ?

NO

REPAIR A POOR CONNECTION OF THE CONNECTORS OR AN OPEN CIRCUIT BETWEEN 4 [X-13] AND 2 [B-52]

YES

REPLACE THE WINDSHIELD INTERMITTENT RELAY

NO

REPAIR A POOR CONNECTION OF THE CONNECTORS OR AN OPEN CIRCUIT BETWEEN 5 [X-13] AND 8 [B-52]

1-3. INTERMITTENT INTERVAL DOES NOT CHANGE

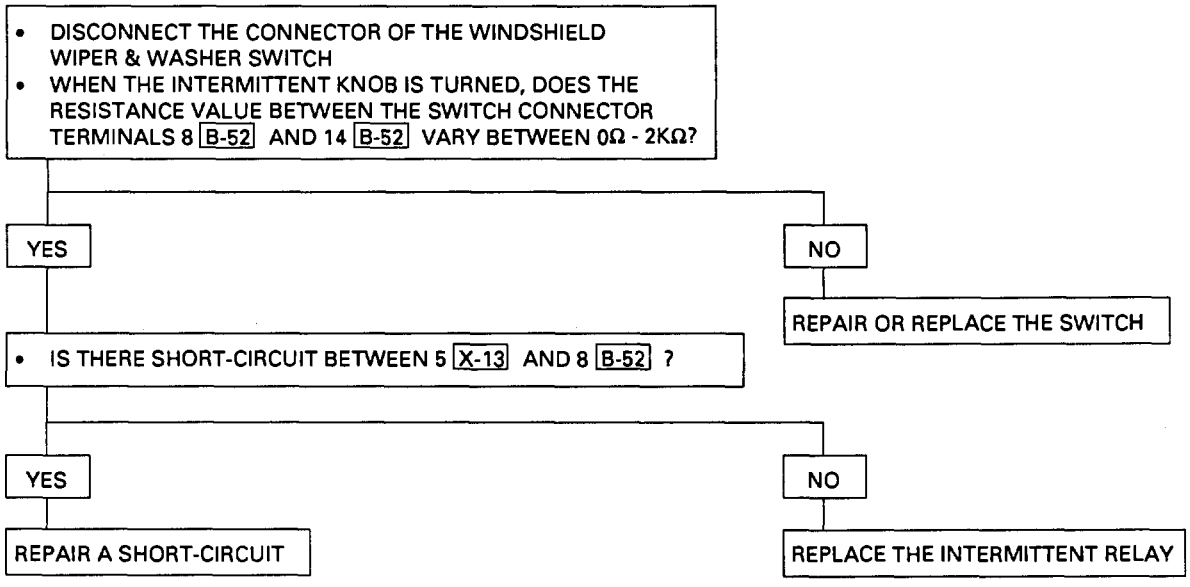

1-4. WINDSHIELD WIPER DOES NOT OPERATE AT "LO" POSITION

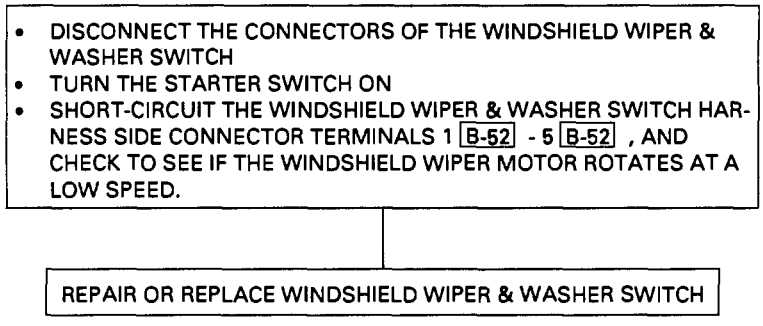

1-5. WINDSHIELD WIPER DOES NOT OPERATE AT "HI" POSITION

- DISCONNECT THE CONNECTOR OF THE WINDSHIELD WIPER & WASHER SWITCH
- WITH THE SWITCH SET AT "HI" POSITION, IS THERE CONTINUITY BETWEEN THE SWITCH CONNECTOR TERMINALS 1 [B-52] AND 4 [B-52] ?

YES

- DISCONNECT THE CONNECTOR OF THE WINDSHIELD WIPER MOTOR
- CONNECT THE MOTOR CONNECTOR 1 [C-38] TO THE BATTERY (+) TERMINAL, AND 3 [C-38] TO THE BATTERY (–) TERMINAL
- DOES THE MOTOR ROTATE AT A HIGH SPEED?

YES

- REPAIR A POOR CONNECTION OF THE CONNECTORS OR AN OPEN CIRCUIT BETWEEN 4 [B-52] AND 1 [C-38]

NO

REPAIR OR REPLACE THE WINDSHIELD WIPER MOTOR

NO

REPAIR OR REPLACE THE WINDSHIELD WIPER & WASHER SWITCH

1-6. AUTO-STOP FUNCTION OF THE WINDSHIELD WIPER MOTOR DOES NOT OPERATE

- DISCONNECT THE CONNECTOR OF THE WINDSHIELD WIPER & WASHER SWITCH
- WITH THE SWITCH SET AT "OFF" POSITION, IS THERE CONTINUITY BETWEEN THE SWITCH CONNECTOR TERMINALS 5 [B-52] - 6 [B-52] ?

YES

- DISCONNECT THE CONNECTOR OF THE WINDSHIELD WIPER MOTOR
- CONNECT THE MOTOR CONNECTOR 2 [C-38] TO THE BATTERY (+) TERMINAL AND 3 [C-38] TO THE (–) TERMINAL, AND THEN CHANGE THE CONNECTION OF THE BATTERY (+) TERMINAL TO THE CONNECTOR 6 [C-38] WHILE THE MOTOR ROTATING AT A LOW SPEED
- WHEN CONNECTING THE CONNECTOR TERMINALS 2 [C-38] AND 5 [C-38] IN THIS CONDITION, DOES THE MOTOR STOP AT AUTO-STOP POSITION?

NO

REPAIR OR REPLACE THE WINDSHIELD WIPER & WASHER SWITCH

YES

- TURN THE STARTER SWITCH ON
- IS THERE A BATTERY VOLTAGE APPLIED BETWEEN THE WINDSHIELD WIPER MOTOR HARNESS SIDE CONNECTOR TERMINAL 6 [C-38] AND GROUND?

NO

REPAIR OR REPLACE THE WINDSHIELD WIPER MOTOR

YES

- DISCONNECT THE CONNECTOR OF THE WINDSHIELD INTERMITTENT RELAY
- IS THERE CONTINUITY BETWEEN THE RELAY HARNESS SIDE CONNECTOR 6 [X-13] AND THE WINDSHIELD WIPER MOTOR HARNESS SIDE CONNECTOR 5 [C-38] ?

NO

REPAIR A POOR CONNECTION OF THE CONNECTORS OR AN OPEN CIRCUIT BETWEEN THE FUSE C-5 (15A) AND 6 [C-38]

YES

REPLACE THE WINDSHIELD INTERMITTENT RELAY

NO

REPAIR A POOR CONNECTION OF THE CONNECTORS OR AN OPEN CIRCUIT BETWEEN 6 [X-13] AND 5 [C-38]

1-7. ROTATION OF THE WINDSHIELD WIPER MOTOR DOES NOT STOP

- IS THE CONTINUITY IN THE WINDSHIELD WIPER & WASHER SWITCH NORMAL?

YES

REPAIR OR REPLACE THE WINDSHIELD WIPER MOTOR

NO

REPAIR OR REPLACE THE WINDSHIELD WIPER & WASHER SWITCH

1-8. WINDSHIELD WASHER MOTOR DOES NOT OPERATE

- IS FUSE C-5 (15A) NORMAL?

NO → REPLACE FUSE C-5 (15A)

YES →
- DISCONNECT THE CONNECTOR OF THE WINDSHIELD WIPER & WASHER SWITCH
- WITH THE WASHER BUTTON DEPRESSED, IS THERE CONTINUITY BETWEEN THE SWITCH SIDE CONNECTOR TERMINALS 1 [B-52] AND 7 [B-52] ?

NO → REPAIR OR REPLACE THE WINDSHIELD WIPER & WASHER SWITCH

YES →
- TURN THE STARTER SWITCH ON
- IS THERE A BATTERY VOLTAGE APPLIED BETWEEN THE WINDSHIELD WIPER & WASHER SWITCH HARNESS SIDE CONNECTOR TERMINAL 1 [B-52] AND THE GROUND?

NO → REPAIR A POOR CONNECTION OF THE CONNECTORS OR A OPEN CIRCUIT BETWEEN FUSE C-5 (15A) AND 1 [B-52]

YES →
- DISCONNECT THE CONNECTOR OF THE WINDSHIELD WIPER WASHER MOTOR
- TURN THE STARTER SWITCH ON
- WITH THE WASHER BUTTON OF THE WINDSHIELD WIPER & WASHER SWITCH DEPRESSED, IS THERE A BATTERY VOLTAGE APPLIED BETWEEN THE WASHER MOTOR HARNESS SIDE CONNECTOR TERMINAL 1 [C-35] AND THE GROUND?

NO → REPAIR A POOR CONNECTION OF THE CONNECTORS OR AN OPEN CIRCUIT BETWEEN 1 [C-35] AND 7 [B-52]

YES →
- IS 1 [C-39] GROUNDED SECURELY?

NO → GROUND IT SECURELY

YES →
- CONNECT THE MOTOR SIDE CONNECTOR 1 [C-35] OF THE WINDSHIELD WASHER MOTOR TO THE BATTERY (+) TERMINAL, AND THE CONNECTOR 2 [C-35] TO THE (–) TERMINAL
- DOES THE MOTOR ROTATE?

NO → REPAIR OR REPLACE THE WINDSHIELD WASHER MOTOR

YES → REPAIR A POOR CONNECTION OF THE CONNECTORS OR AN OPEN CIRCUIT BETWEEN 2 [C-35] AND 1 [C-39]

2-1. REAR WIPER MOTOR DOES NOT OPERATE

- IS FUSE C-6 (10A) NORMAL?

YES

- DISCONNECT THE CONNECTOR OF THE REAR WIPER & WASHER SWITCH
- IS CONTINUITY IN THE REAR WIPER & WASHER SWITCH NORMAL

NO

REPLACE FUSE C-6 (10A)

YES

- TURN THE STARTER SWITCH ON
- IS THERE A BATTERY VOLTAGE APPLIED BETWEEN THE REAR WIPER & WASHER SWITCH HARNESS SIDE CONNECTOR TERMINAL 7 [I-16] AND GROUND?

NO

REPAIR OR REPLACE THE REAR WIPER & WASHER SWITCH

YES

- DISCONNECT THE CONNECTOR OF THE REAR WIPER MOTOR
- WITH THE MOTOR SIDE CONNECTOR 2 [G-6] CONNECTED TO THE BATTERY (+) TERMINAL AND THE CONNECTOR 4 [G-6] TO THE (–) TERMINAL, DOES THE MOTOR ROTATE?

NO

REPAIR A POOR CONNECTION OF THE CONNECTORS OR AN OPEN CIRCUIT BETWEEN FUSE C-6 (10A) AND 7 [I-16]

YES

- IS [R-3] GROUNDED SECURELY?

NO

REPAIR OR REPLACE THE REAR WIPER MOTOR

YES

- DISCONNECT THE CONNECTOR OF THE REAR WIPER MOTOR
- TURN THE STARTER SWITCH ON
- WITH THE REAR WIPER & WASHER SWITCH AT WIPER POSITION, IS THE BATTERY VOLTAGE APPLIED BETWEEN 2 [G-6] AND THE GROUND?

NO

GROUND IT SECURELY

YES

- DISCONNECT THE [R-3] CONNECTOR
- IS THE BATTERY VOLTAGE APPLIED BETWEEN [R-3] AND THE GROUND?

NO

REPAIR A POOR CONNECTION OF THE CONNECTORS OR AN OPEN CIRCUIT BETWEEN 8 [I-16] AND 4 [B-21], 2 [B-21] AND 2 [G-6]

YES

REPLACE THE REAR INTERMITTENT RELAY

NO

REPAIR A POOR CONNECTION OF THE CONNECTORS OR AN OPEN CIRCUIT BETWEEN 4 [G-6] AND 4 [R-3]

2-2. AUTO-STOP FUNCTION OF THE REAR WIPER MOTOR DOES NOT OPERATE

- DISCONNECT THE CONNECTOR OF THE REAR WIPER MOTOR
- WITH THE MOTOR SIDE CONNECTOR 2 [G-6] CONNECTED TO THE BATTERY (+) TERMINAL AND THE TERMINAL 4 [G-6] TO THE (–) TERMINAL, ROTATE THE MOTOR
- WHILE ROTATING THE MOTOR, CHANGE THE CONNECTION OF THE BATTERY (+) TERMINAL TO THE CONNECTOR 3 [G-6] , AND THEN CONNECT THE CONNECTORS 1 [G-6] AND 2 [G-6]
- DOES THE REAR WIPER STOP AT THE AUTO-STOP POSITION IN THIS CONDITION?

YES

- TURN THE START SWITCH ON
- IS THERE A BATTERY VOLTAGE APPLIED BETWEEN THE REAR WIPER MOTOR HARNESS SIDE CONNECTOR 3 [G-6] AND THE GROUND?

YES

- DISCONNECT THE CONNECTOR OF THE REAR INTERMITTENT RELAY
- IS THERE CONTINUITY BETWEEN THE RELAY HARNESS SIDE CONNECTOR 5 [B-21] AND THE WIPER MOTOR HARNESS SIDE CONNECTOR 1 [G-6] ?

YES

REPLACE THE REAR INTERMITTENT RELAY

NO

REPAIR A POOR CONNECTION OF THE CONNECTORS OR AN OPEN CIRCUIT BETWEEN 5 [B-21] AND 1 [G-6]

NO

REPAIR A POOR CONNECTION OF THE CONNECTORS OR AN OPEN CIRCUIT BETWEEN THE FUSE C-6 (10A) AND 3 [G-6]

NO

REPAIR OR REPLACE THE REAR WIPER MOTOR

2-3. REAR WIPER MOTOR DOES NOT OPERATE AT WIPER POSITION

- IS CONTINUITY IN THE REAR WIPER & WASHER SWITCH NORMAL?

YES

- DISCONNECT THE CONNECTOR OF THE REAR INTERMITTENT RELAY
- TURN THE STARTER SWITCH ON
- WITH THE REAR WIPER & WASHER SWITCH SET AT WIPER POSITION, IS THERE A BATTERY VOLTAGE APPLIED BETWEEN THE RELAY HARNESS SIDE CONNECTOR 4 [B-21] AND GROUND?

YES

REPLACE THE REAR INTERMITTENT RELAY

NO

REPAIR A POOR CONNECTION OF THE CONNECTORS OR AN OPEN CIRCUIT BETWEEN 4 [B-21] AND 8 [I-16]

NO

REPAIR OR REPLACE THE REAR WIPER & WASHER SWITCH

2-4. REAR WIPER MOTOR DOES NOT OPERATE AT WIPER & WASHER POSITION

- IS CONTINUITY IN THE REAR WIPER & WASHER SWITCH NORMAL?

YES

- DISCONNECT THE CONNECTORS OF THE REAR INTERMITTENT RELAY
- TURN THE STARTER SWITCH ON
- WITH THE REAR WIPER & WASHER SWITCH SET AT WIPER & WASHER POSITION, IS THERE A BATTERY VOLTAGE APPLIED BETWEEN THE RELAY HARNESS SIDE CONNECTOR 3 [B-21] AND THE GROUND?

YES

REPLACE THE REAR INTERMITTENT RELAY

NO

REPAIR A POOR CONNECTION OF THE CONNECTORS OR AN OPEN CIRCUIT BETWEEN 3 [B-21] AND 6 [I-16]

NO

REPAIR OR REPLACE THE REAR WIPER & WASHER SWITCH

2-5. ROTATION OF THE REAR WIPER MOTOR DOES NOT STOP

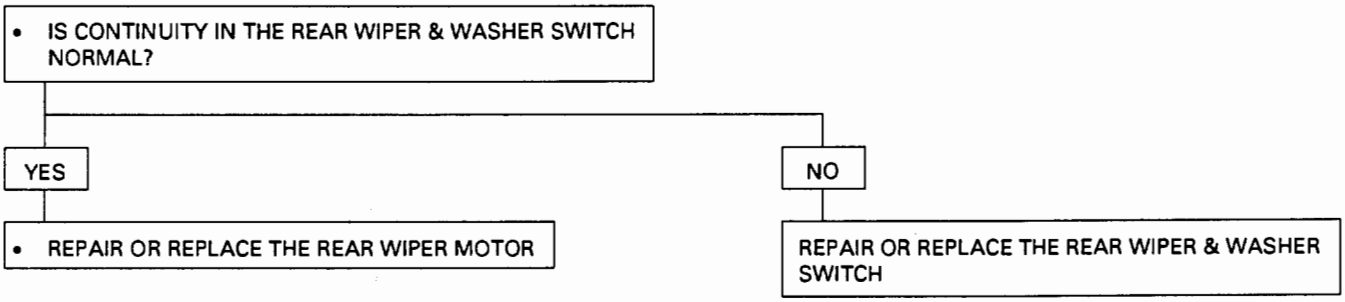

2-6. REAR WASHER MOTOR DOES NOT OPERATE

- IS FUSE C-6 (10A) NORMAL?

YES

- DISCONNECT THE CONNECTOR OF THE REAR WIPER & WASHER SWITCH
- WITH THE SWITCH SET AT WIPER & WASHER POSITION, IS THERE CONTINUITY BETWEEN THE SWITCH CONNECTOR TERMINALS 7 [I-16] - 6 [I-16] ?

YES

- TURN THE STARTER SWITCH ON
- IS THERE A BATTERY VOLTAGE APPLIED BETWEEN THE REAR WIPER & WASHER SWITCH HARNESS SIDE CONNECTOR 7 [I-16] AND GROUND?

YES

- DISCONNECT THE CONNECTOR OF THE REAR WASHER MOTOR
- TURN THE STARTER SWITCH ON
- WITH THE REAR WIPER & WASHER SWITCH SET AT WIPER & WASHER POSITION, IS THERE A BATTERY VOLTAGE APPLIED BETWEEN THE REAR WASHER MOTOR HARNESS SIDE CONNECTOR 1 [G-2] AND GROUND?

YES

- CONNECT THE MOTOR SIDE CONNECTOR TERMINAL 1 [G-2] TO THE BATTERY (+) TERMINAL AND 2 [G-2] TO THE (–) TERMINAL
- DOES THE MOTOR ROTATE?

YES

- IS [R-3] GROUNDED SECURELY?

YES

REPAIR A POOR CONNECTION OF THE CONNECTORS OR AN OPEN CIRCUIT BETWEEN 2 [G-2] AND [R-3]

NO

GROUND IT SECURELY

NO

REPAIR OR REPLACE THE REAR WASHER MOTOR

NO

REPAIR A POOR CONNECTION OF THE CONNECTORS OR AN OPEN CIRCUIT BETWEEN 1 [G-2] AND 6 [I-16]

NO

REPAIR OR REPLACE THE REAR WIPER & WASHER SW

NO

REPAIR A POOR CONNECTION OF THE CONNECTORS OR AN OPEN CIRCUIT BETWEEN THE FUSE C-6 (10A) AND 7 [I-16]

NO

REPLACE THE FUSE

STARTER SWITCH

Refer to "START AND CHARGING" in this section.

WINDSHIELD WIPER & WASHER SWITCH

With the starter switch on, this switch controls wiper motor operation and speed.
Both the washer and the wiper motors operate while the washer switch is on position.

INSPECTION

Check the continuity between the connector terminals of the switch. (Fig. 8-254)
Repair or replace the switch when the result of inspection is found abnormal.

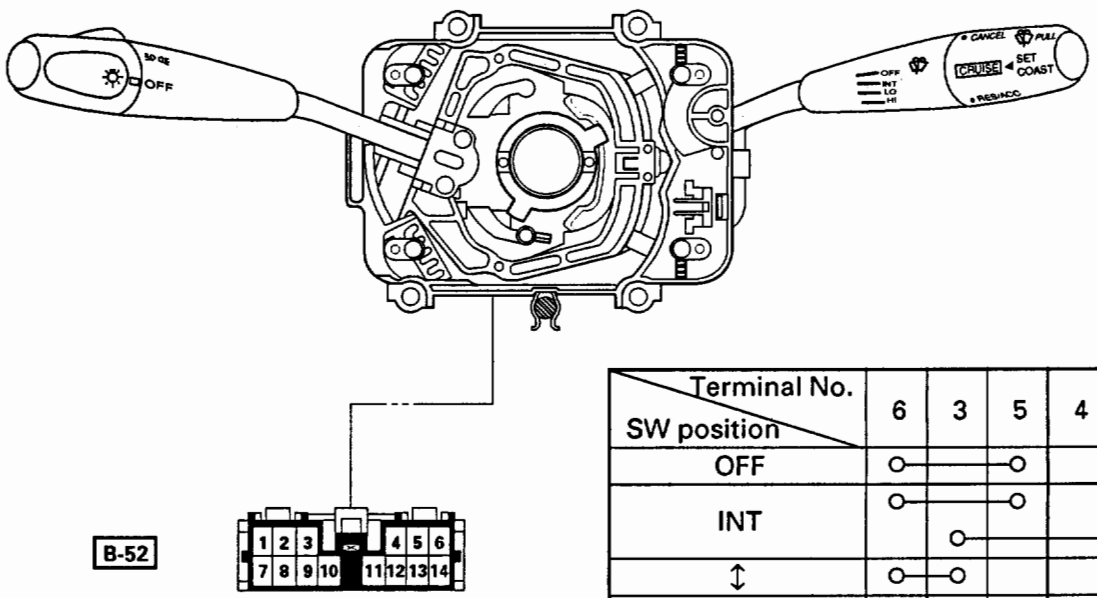

SW position \ Terminal No.	6	3	5	4	2	7	1
OFF	○——	———	——○				
INT	○——	———	——○				
		○——	———	———	——○		
↕	○——	——○					
LO		○——	——○				
HI		○——	———	——○			
						○——	——○

Fig. 8-254

REMOVAL AND INSTALLATION

Refer to the removal and installation steps of the LIGHTING SWITCH (COMBINATION SWITCH) in HEADLIGHT AND FOG LIGHT of this section.

WINDSHIELD WIPER MOTOR

INSPECTION (FIG. 8-255)

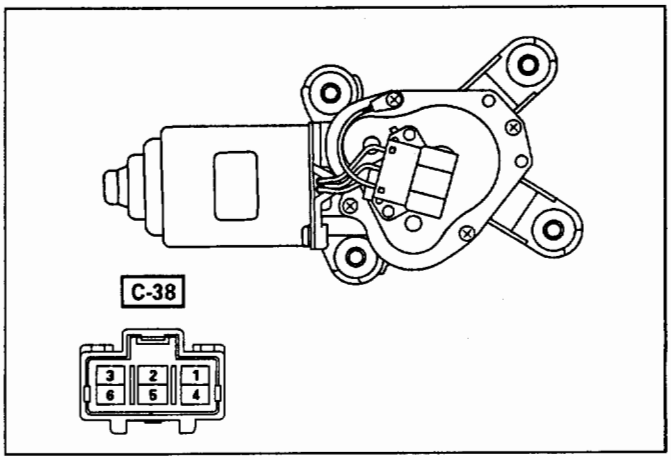

Fig. 8-255

1. **Operation in low speed**
   With the motor connector terminal 2 [C-38] connected to the battery (+) terminal and the connector 3 [C-38] to the (–) terminal, check to see if the motor rotates in low speed.
2. **Operation in high speed**
   With the motor connector terminal 1 [C-38] connected to the battery (+) terminal and the connector 3 [C-38] to the (–) terminal, check to see if the motor rotates in high speed.
3. **Stop operation**
   After stopping the windshield wiper in the position on the way by confirming the operation at the low speed in Item No.1.
   When the connectors 2 [C-38] and 5 [C-38] are connected, while connecting the motor connector terminal 6 [C-38] to the battery (+) terminal and the connector 3 [C-38] to the (–) terminal, check to see if the motor rotates at low speed and stops at the auto-stop position.
   Repair or replace the motor when the results of the above inspections are found abnormal.

REMOVAL (FIG. 8-256)

Preparation: Disconnect the battery ground cable.

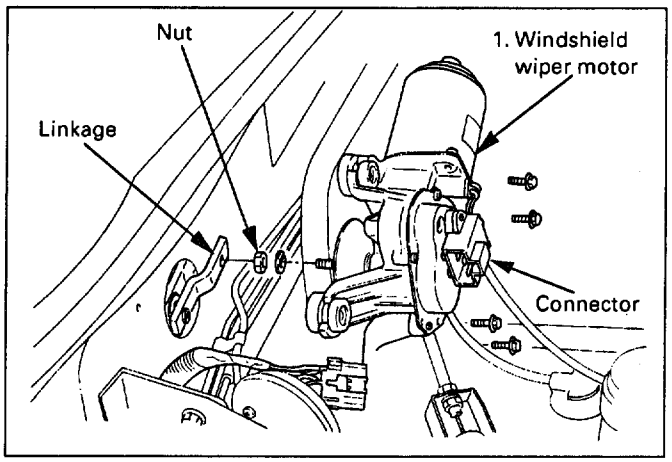

Fig. 8-256

1. **Windshield wiper motor**
   - Disconnect the connector.
   - Remove 4 mounting bolts.
   - Remove the nut of the wiper motor shaft, and disconnect the linkage.

CAUTION:
To facilitate the removal of the nuts, be sure to put out the tip portion of the linkage sufficiently through the mounting hole of the motor by sliding the wiper blade slowly.

INSTALLATION

To install, follow the removal steps in the reverse order, noting the following points.

1. Tighten the wiper motor shaft nuts to the specified torque.

Nut torque	N·m (lb·in)	14 (122)

2. Remove the wiper arms on both sides, and rotate the wiper motor until it get to the auto-stop position to reinstall the wiper blade.

WINDSHIELD WASHER MOTOR

INSPECTION

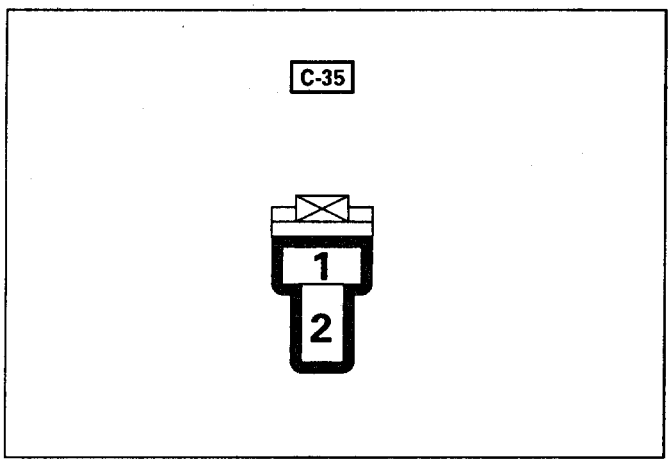

Fig. 8-257

With the battery (+) terminal connected to the washer motor connector terminal 1 [C-35] and the (–) terminal to the connector 2 [C-35], check to see if the cleaning fluid gushes out. (Fig. 8-257)
Replace the tank/motor when the result of inspection is found abnormal.

REMOVAL (FIG. 8-258)

Preparation: Disconnect the battery ground cable.

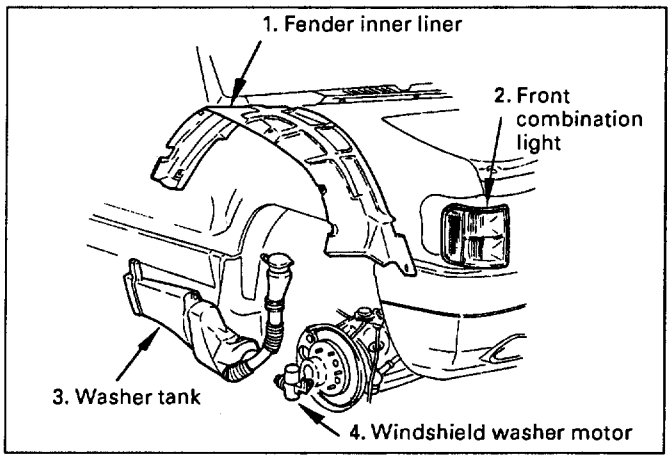

Fig. 8-258

1. **Fender inner liner (right side)**
2. **Front combination light**
   - Remove the screw
3. **Washer tank**
   - Remove 2 screws.
   - Remove the filler neck
   - Remove the hose.
   - Disconnect the connector of the washer motor.
4. **Windshield washer motor**
   - Hold the motor and pull it out from the washer tank.

INSTALLATION

To install, follow the removal steps in the reverse order.

WINDSHIELD WIPER ARM/BLADE

REMOVAL (FIG. 8-259)

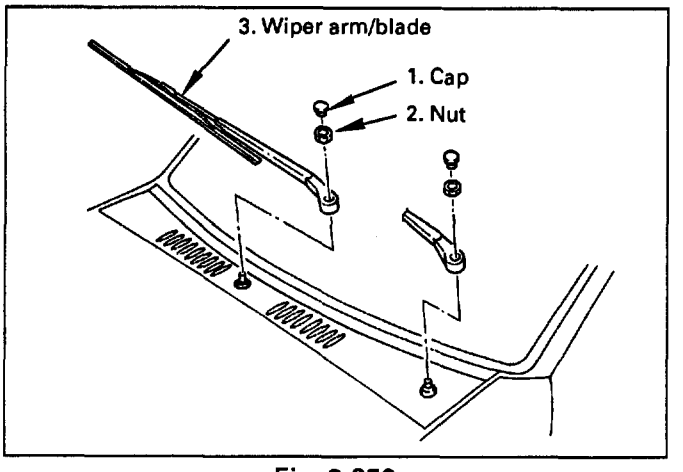

Fig. 8-259

1. **Cap**
   - Pry it off with the tip of a screwdriver.
2. **Nut**
3. **Wiper arm/blade**

INSTALLATION

To install, follow the removal steps in the reverse order, noting the following points.

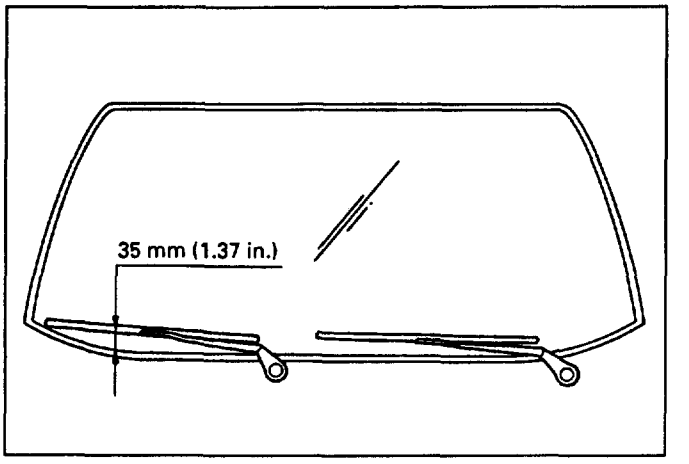

Fig. 8-260

1. **Wiper arm/blade**
   - Before installing the wiper arm/blade to the shaft, confirm that the motor stops at the auto-stop position.
   - Set the wiper arm/blade so that the tips of both blades are positioned about 35 mm (1.37 in) from the upper edge of the cowl cover. (Fig. 8-260)
   - Tighten the nuts to the specified torque.

Nut torque	N·m (lb·ft)	31 (23)

WINDSHIELD WIPER LINKAGE

REMOVAL (FIG. 8-261)

Preparation: Disconnect the battery ground cable.

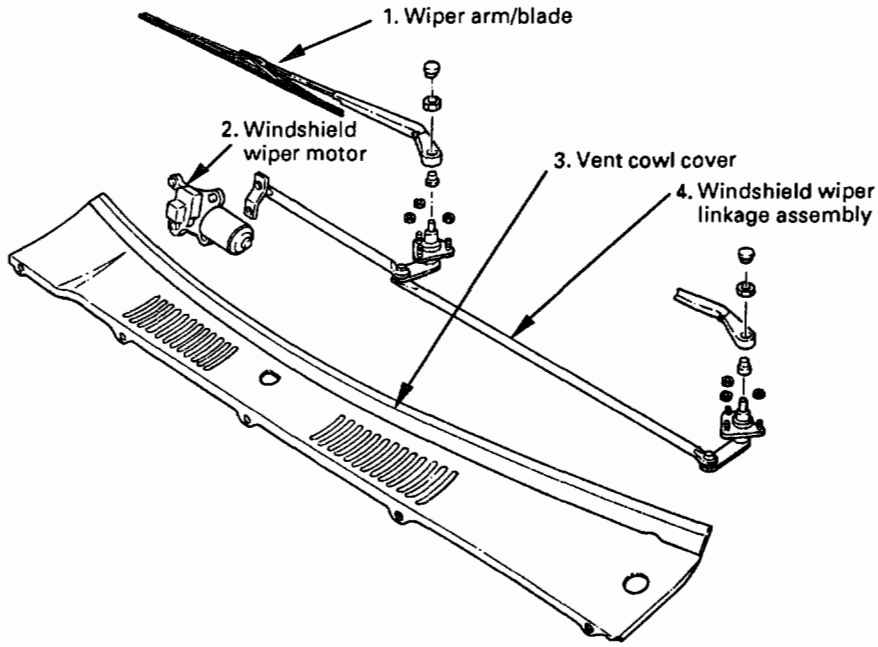

Removal steps
1. Wiper arm/blade
2. Windshield wiper motor
3. Vent cowl cover
4. Windshield wiper linkage assembly

Installation steps
To install, follow the removal steps in the reverse order.

Fig. 8-261

1. **Wiper arm/blade**
   - Refer to the removal procedure of the wiper arm/blade of this section.
2. **Windshield wiper motor**
   - Refer to the removal procedure of the windshield wiper motor of this section.
3. **Vent cowl cover**
   - Remove the pivot assembly mounting nuts.
   - Remove the fixing screws.
4. **Windshield wiper linkage assembly**
   - Take out the linkage assembly from the opening of the cowl.

INSTALLATION

To install, follow the removal steps in the reverse order.

REAR WIPER & WASHER SWITCH

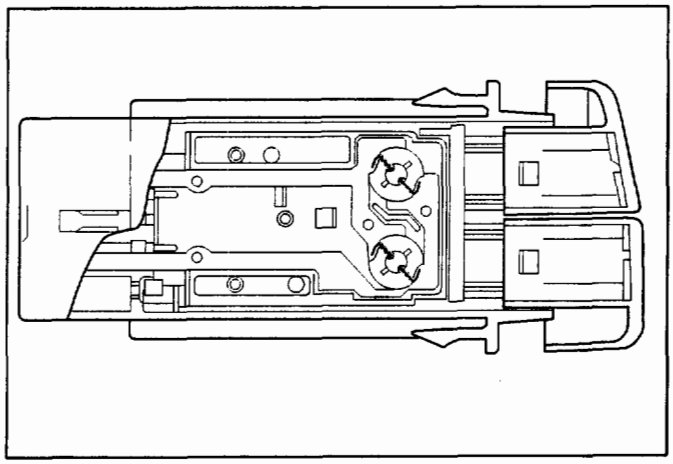

Fig. 8-262

The operation of the switch with the starter switch on allows the start and stop of the wiper motor.
Also, both the washer and the wiper motors operate as long as the switch is being pushed to the wash side. (Fig. 8-262)

INSPECTION

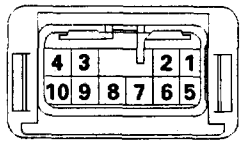

SW symbol	SW position \ Terminal No.	6	7	8	2	3
	OFF					
	ON		O—O			
	OFF					
	ON	O—O				

Fig. 8-263

Check the continuity between the connector terminals of the switch. (Fig. 8-263)
Repair or replace the switch when the result of inspection is found abnormal.

REMOVAL (FIG. 8-264)

Preparation: Disconnect the battery ground cable.

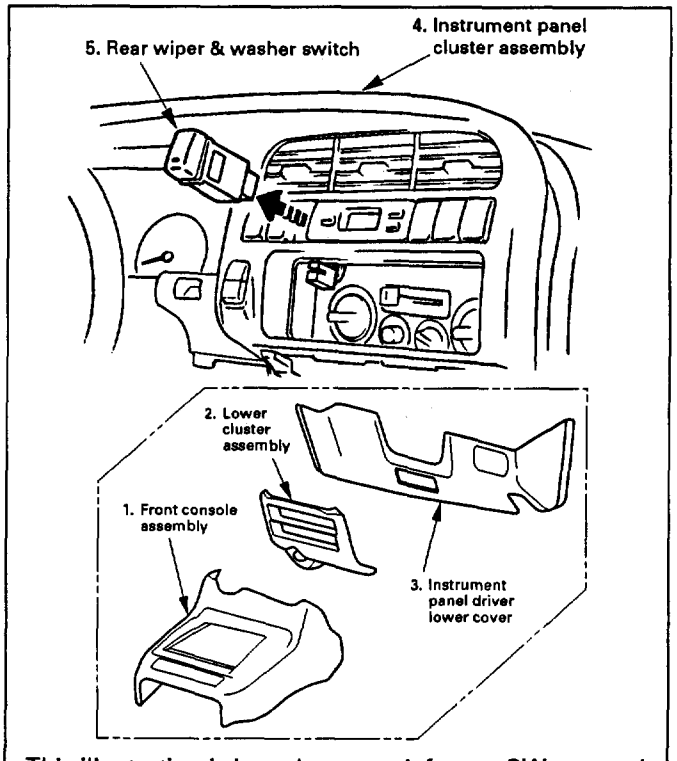

This illustration is based on rear defogger SW removal.

Fig. 8-264

1. **Front console assembly**
2. **Lower cluster assembly**
3. **Instrument panel driver lower cover**
4. **Instrument panel cluster assembly**
   - Refer to FOG LIGHT SWITCH removal steps in this section.
5. **Rear wiper & washer switch**
   - To remove the switch, pushing the lock from the back side of the cluster assembly.

INSTALLATION

To install, follow the removal steps in the reverse order, noting the following point.

1. Push the switch with your fingers until it locks securely.

REAR WIPER MOTOR

INSPECTION

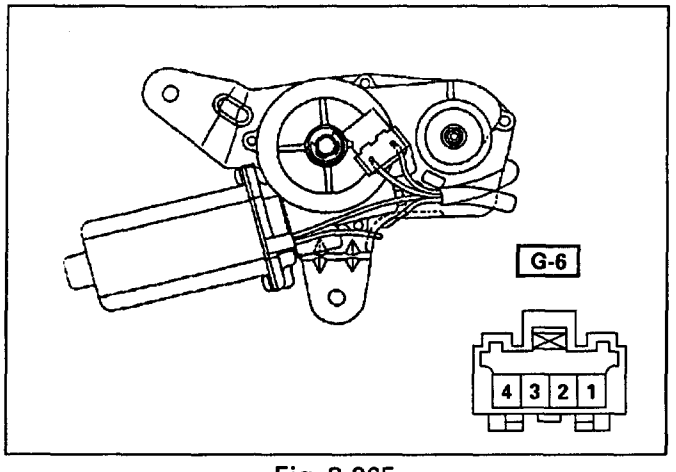

Fig. 8-265

With the battery (+) terminal connected to the wiper motor connector terminal 2 G-6 and the (–) terminal to the connector 4 G-6, check to see if the motor rotates. (Fig. 8-265)
Repair or replace the motor when the result of inspection is found abnormal.

REMOVAL (FIG. 8-266)

Preparation: Disconnect the battery ground cable.

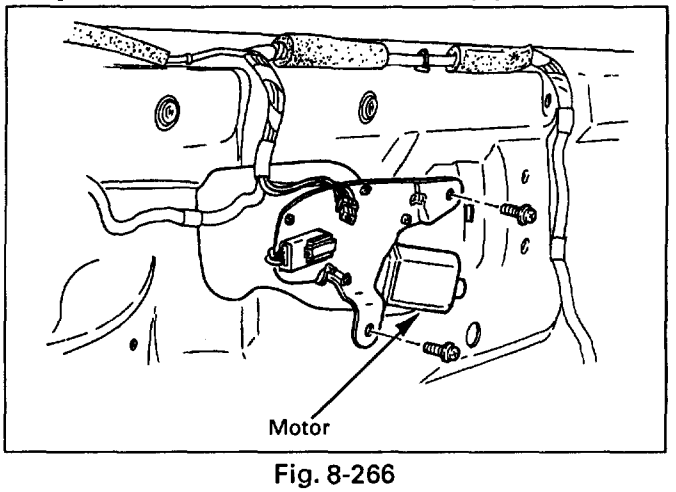

Fig. 8-266

1. **Tailgate trim pad**
   - Refer to the removal steps of the tailgate in Section 10 "BODY".
2. **Wiper arm/blade**
   Refer to the removal steps of the rear wiper arm/blade in this section.
3. **Motor**
   - Remove the wiper motor shaft nut.
   - Disconnect the connector.
   - Remove 3 screws.

INSTALLATION

To install, follow the removal steps in the reverse order, noting the following points.

1. Before installing the wiper arm/blade to the motor shaft, confirm that the motor stops at the auto-stop position.

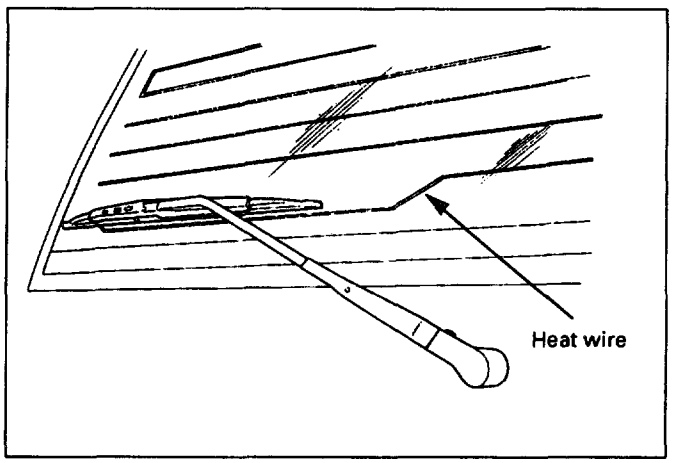

Fig. 8-267

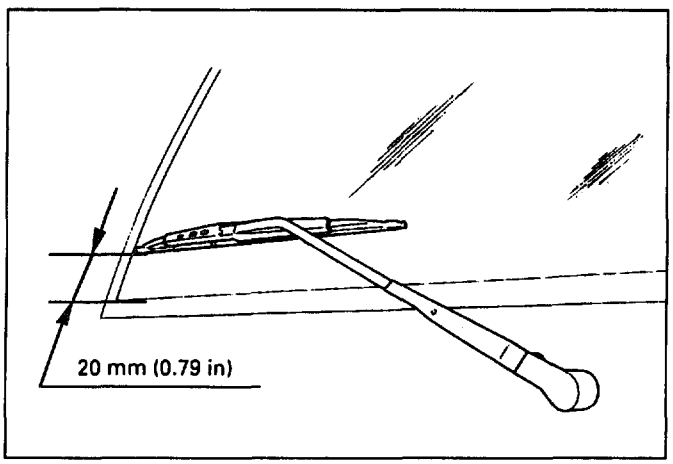

Fig. 8-268

2. Install the wiper arm so that the blade gets parallel to the lowermost heat wire of the rear defogger (w/rear defogger). (Fig. 8-267) or position the blade 20 mm (0.79 in) from edge of windshield (w/rear defogger). (Fig. 8-268)

Nut torque	N·m (lb·in)	6 (52)

3. Tighten the motor shaft nut to the specified torque.

Nut torque	N·m (lb·in)	9 (78)

4. Tighten the wiper arm nut to the specified torque.

REAR WIPER INTERMITTENT RELAY

REMOVAL (FIG. 8-269)

Preparation: Disconnect the battery ground cable.

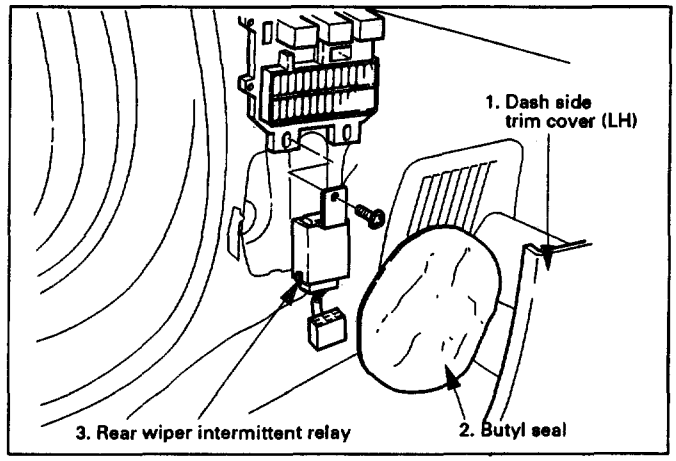

Fig. 8-269

1. **Dash side trim cover (LH)**
   - Remove the clips at three places.
2. **Butyl seal**
   - Peel it off carefully so that it can be reused.
3. **Rear wiper intermittent relay**
   - Remove the bolt which is installed to the anti-theft controller.
   - Disconnect the connector.

INSTALLATION

To install, follow the removal steps in the reverse order.

REAR WASHER MOTOR

INSPECTION

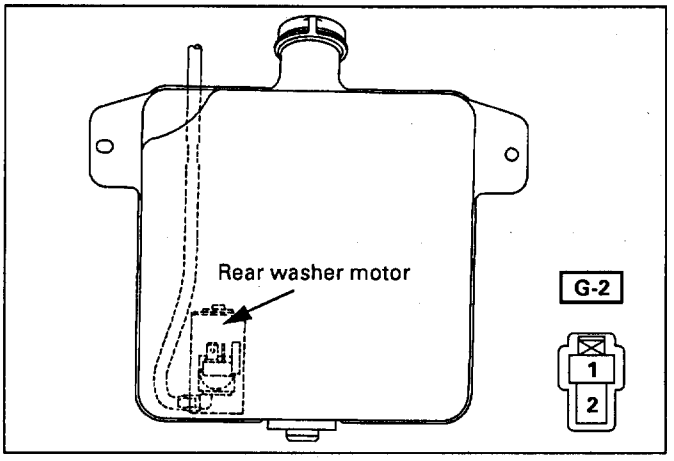

Fig. 8-270

With the battery (+) terminal connected to the washer motor connector terminal 2 [G-6] and the (–) terminal to the connector 1 [G-2], check to see if the motor rotates. (Fig. 8-270)
Repair or replace the motor when the result of inspection is found abnormal.

REMOVAL (FIG. 8-271)

Preparation: Disconnect the battery ground cable.

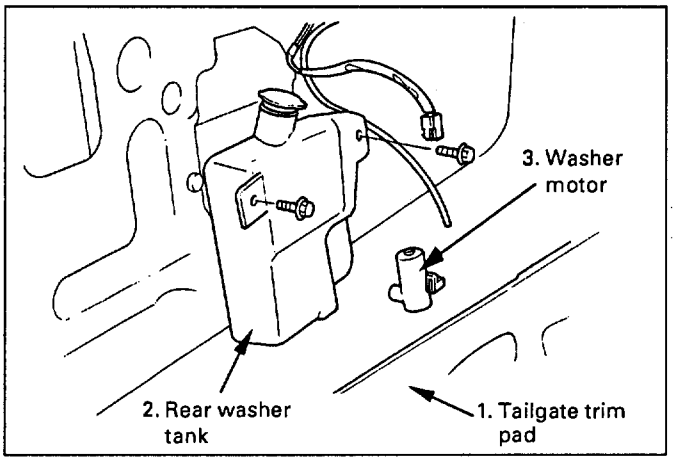

Fig. 8-271

1. **Tail gate trim pad**
   - Refer to the removal of the tailgate in Section 10 "BODY".
2. **Rear washer tank**
   - Remove two screws.
   - Disconnect the connector.
   - Remove the washer hose.
3. **Washer motor**
   - Pull out the motor from the washer tank.

INSTALLATION

To install, follow the removal steps in the reverse order.

REAR WIPER ARM & BLADE

REMOVAL (FIG. 8-272)

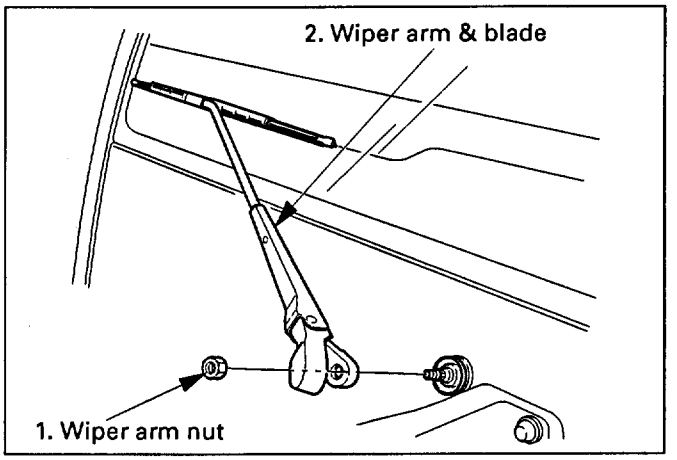

Fig. 8-272

1. **Wiper arm nut**
2. **Wiper arm & blade**

INSTALLATION

To install, follow the removal steps in the reverse order, noting the following points.

1. Before installing the wiper arm & blade to the shaft, confirm that the motor stops at the auto-stop position.

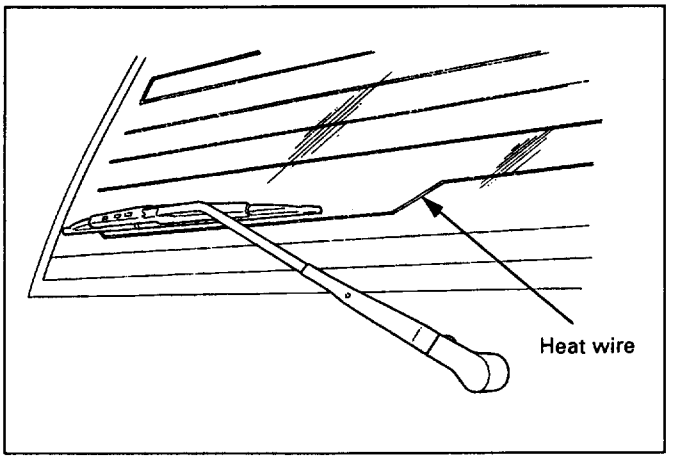

Fig. 8-273

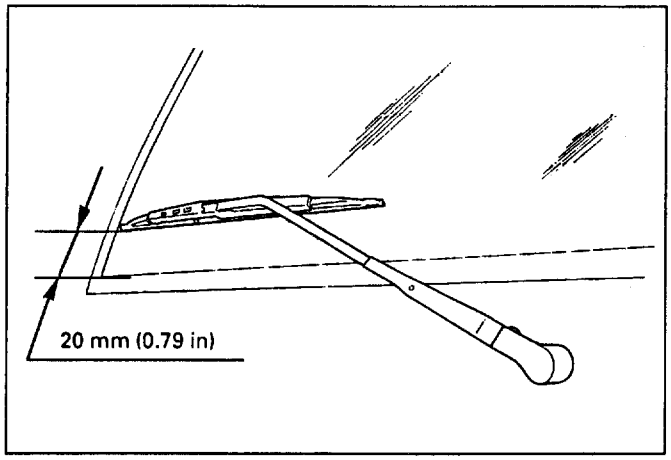

Fig. 8-274

2. Install the wiper arm & blade so that the blade is parallel to the lowermost heat wire of the rear defogger (w/rear defogger). (Fig. 273) or position the blade 20 mm (0.79 in) from edge of windshield (w/o rear defogger). (Fig. 8-274)

Nut torque	N·m (lb·in)	9 (78)

3. Tighten the wiper arm nut to the specified torque.

REAR WASHER NOZZLE

REMOVAL (FIG. 8-275)

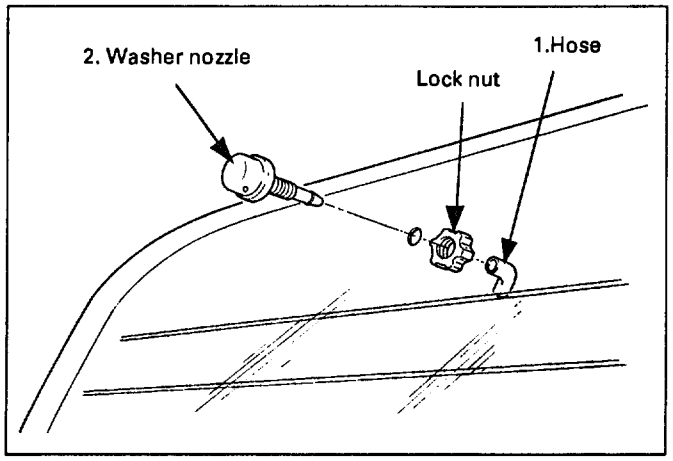

Fig. 8-275

1. **Hose**
   - Disconnect the hose.
2. **Washer nozzle**
   - Remove the lock nut.

INSTALLATION

To install, follow the removal steps in the reverse order.

REAR WASHER NOZZLE ANGLE ADJUSTMENT

Loosen the lock nut of the nozzle to adjust the injection angle of the cleaning fluid, and then retighten the lock nut. (Fig. 8-276)

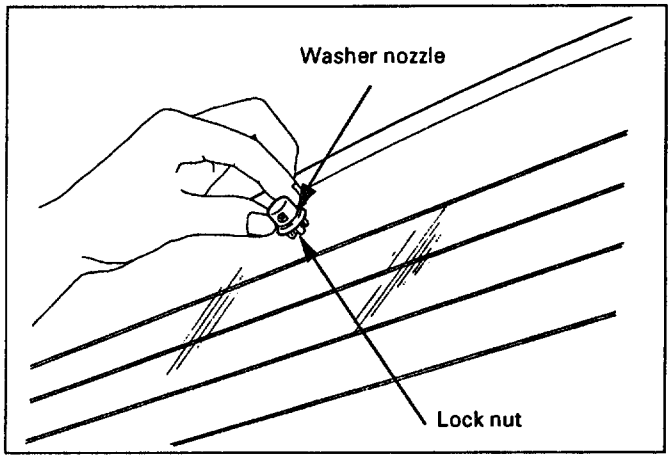

Fig. 8-276

REAR WASHER SPRAY PATTERN (FIG. 8-277)

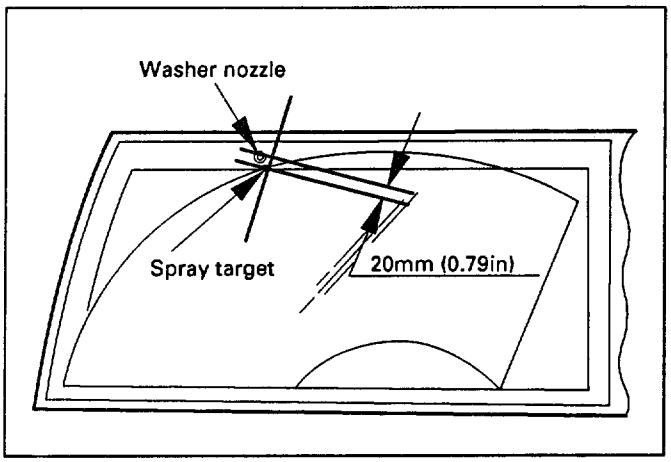

Fig. 8-277

WIPER BLADE RUBBER

REMOVAL

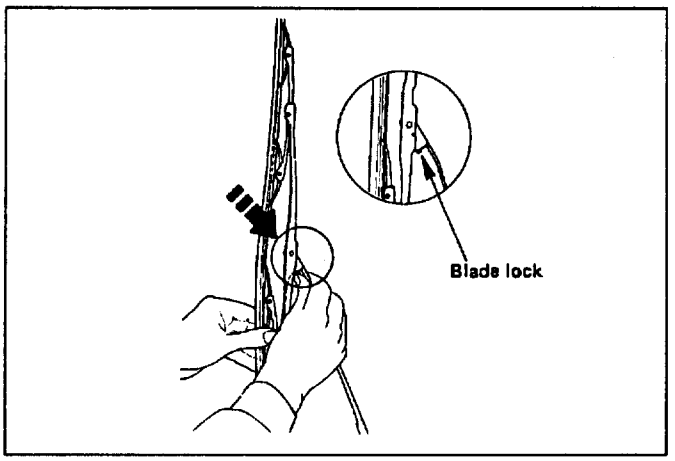

Fig. 8-278

1. **Wiper blade**
   - Push the wiper blade lock while pulling the wiper blade in the arrow direction. (Fig. 8-278)

CAUTION:
When the wiper blade has been removed,wrap the tip of the wiper arm with cloth, to avoid damaging the glass.

2. **Wiper blade rubber**
   - Pull the end of rubber and remove the projection from the click of the blade stay.

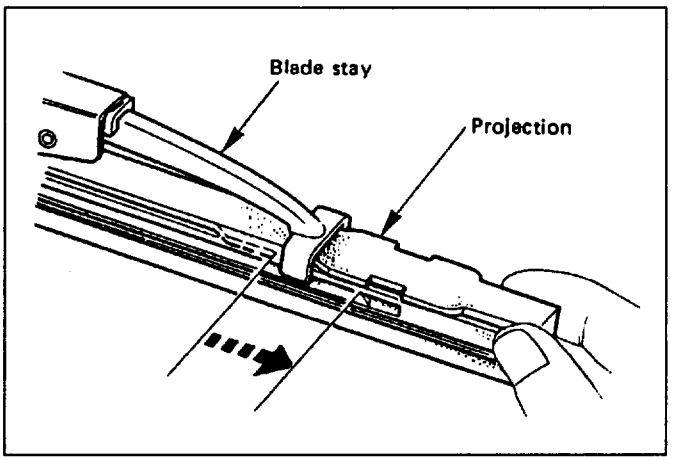

Fig. 8-279

- Pull the rubber out in the same direction. (Fig. 8-279)

INSTALLATION

To install, follow the removal steps in the reverse order, noting the following points.

1. **Wiper blade rubber**
   - Install the click of the blade stay in the groove of the new rubber and slide it in. Complete installation by pushing the click (Fig. 8-280).

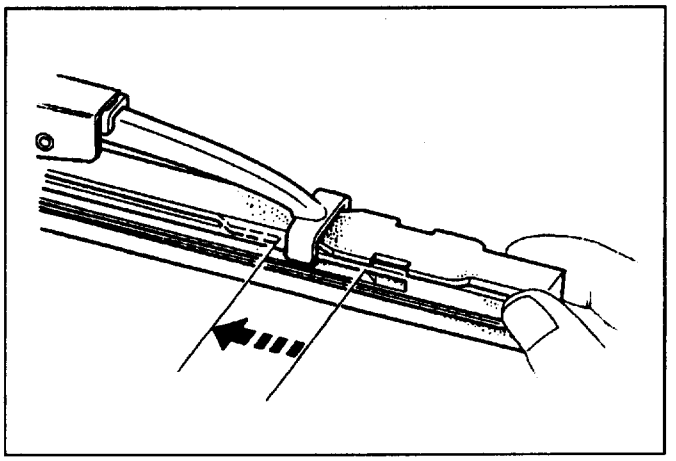

Fig. 8-280

- Finally, check that the click of the stay has caught in the hole of the rubber (Fig. 8-281).

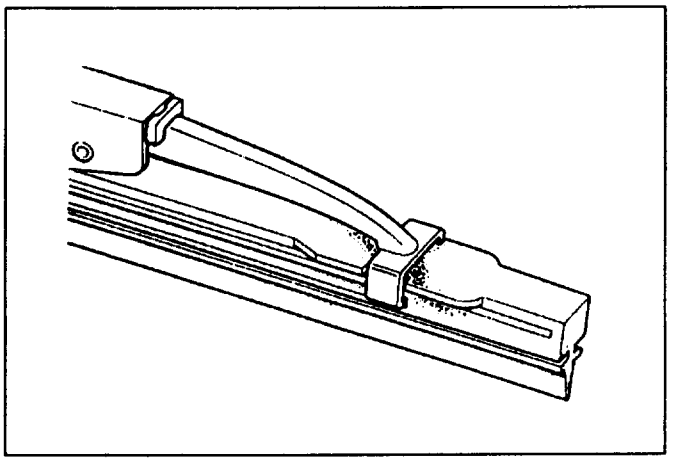

Fig. 8-281

HEADLIGHT WIPER/WASHER

GENERAL DESCRIPTION

The circuit consists of the starter switch, headlight wiper/washer switch, headlight wiper motor and washer motor. By pushing the headlight wiper/washer switch, with the starter switch on, the wiper will make 5 strokes, with washer solution applied between each of the first 4 strokes, regardless of the length of time the switch is held down.

The washer nozzle is installed to the wiper blade, and the washer motor draws fluid from the same reservoir as the windshield washer.

OPERATION OF HEADLIGHT WIPER

1. Headlight wiper switch is set to ON and headlight wiper starts to operate.

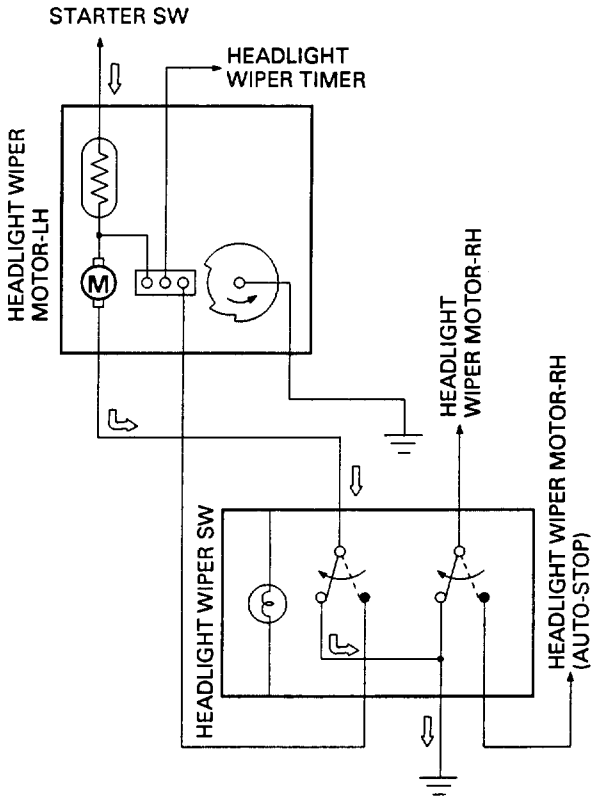

2. Headlight wiper motor continues to operate. switch contact returns to auto-stop position and motor stops at auto-stop position.

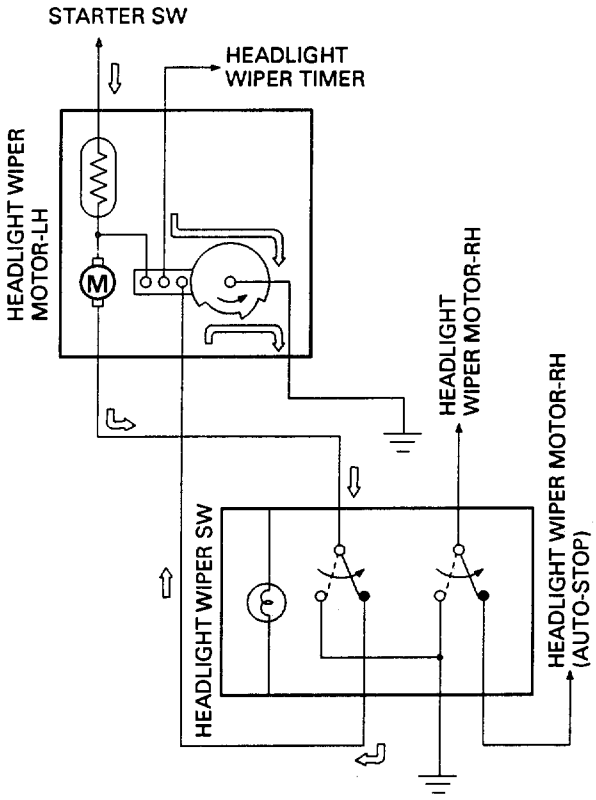

Fig. 8-282

PARTS LOCATION

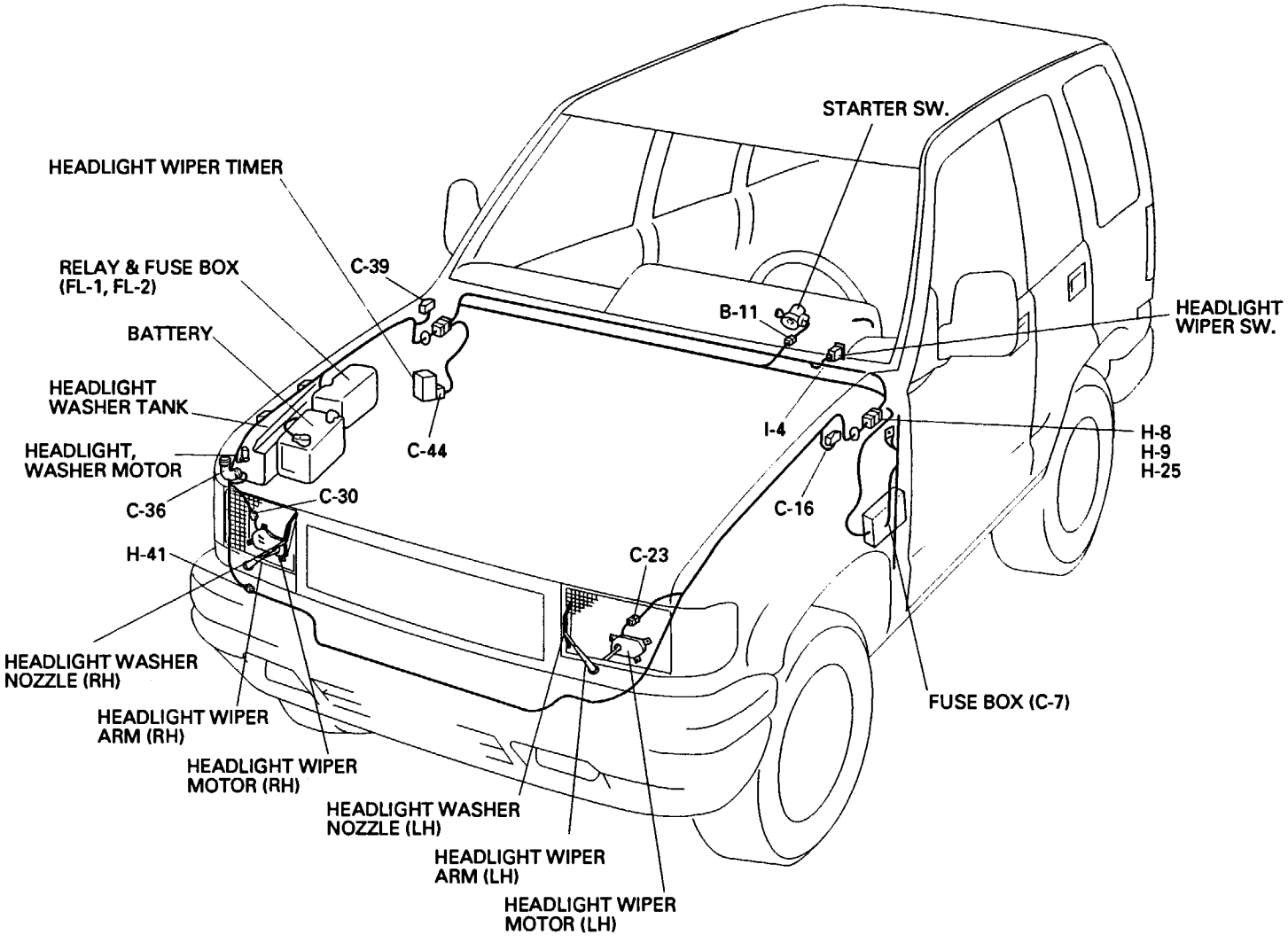

Fig. 8-283

CIRCUIT DIAGRAM

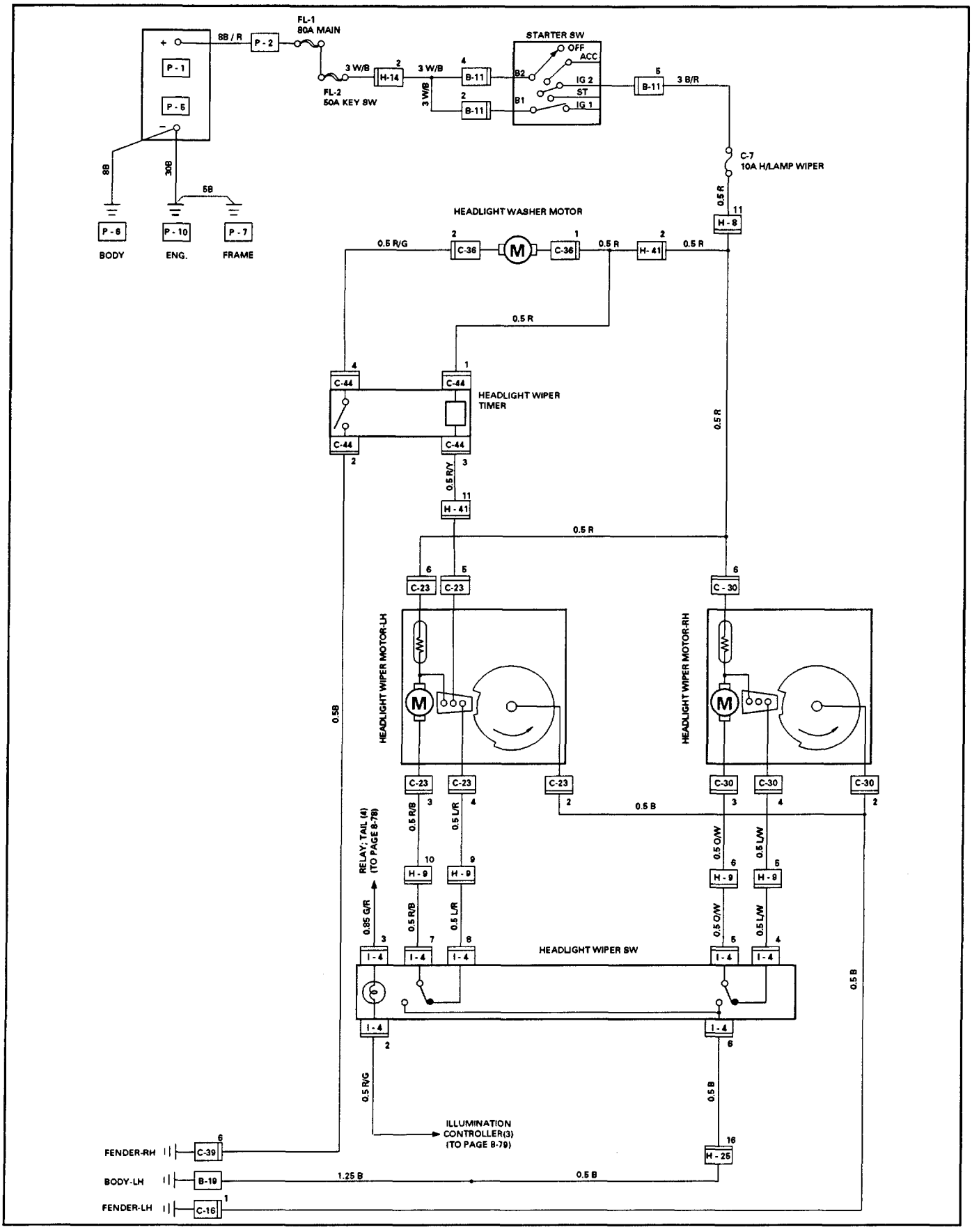

Fig. 8-284

CONNECTOR LIST

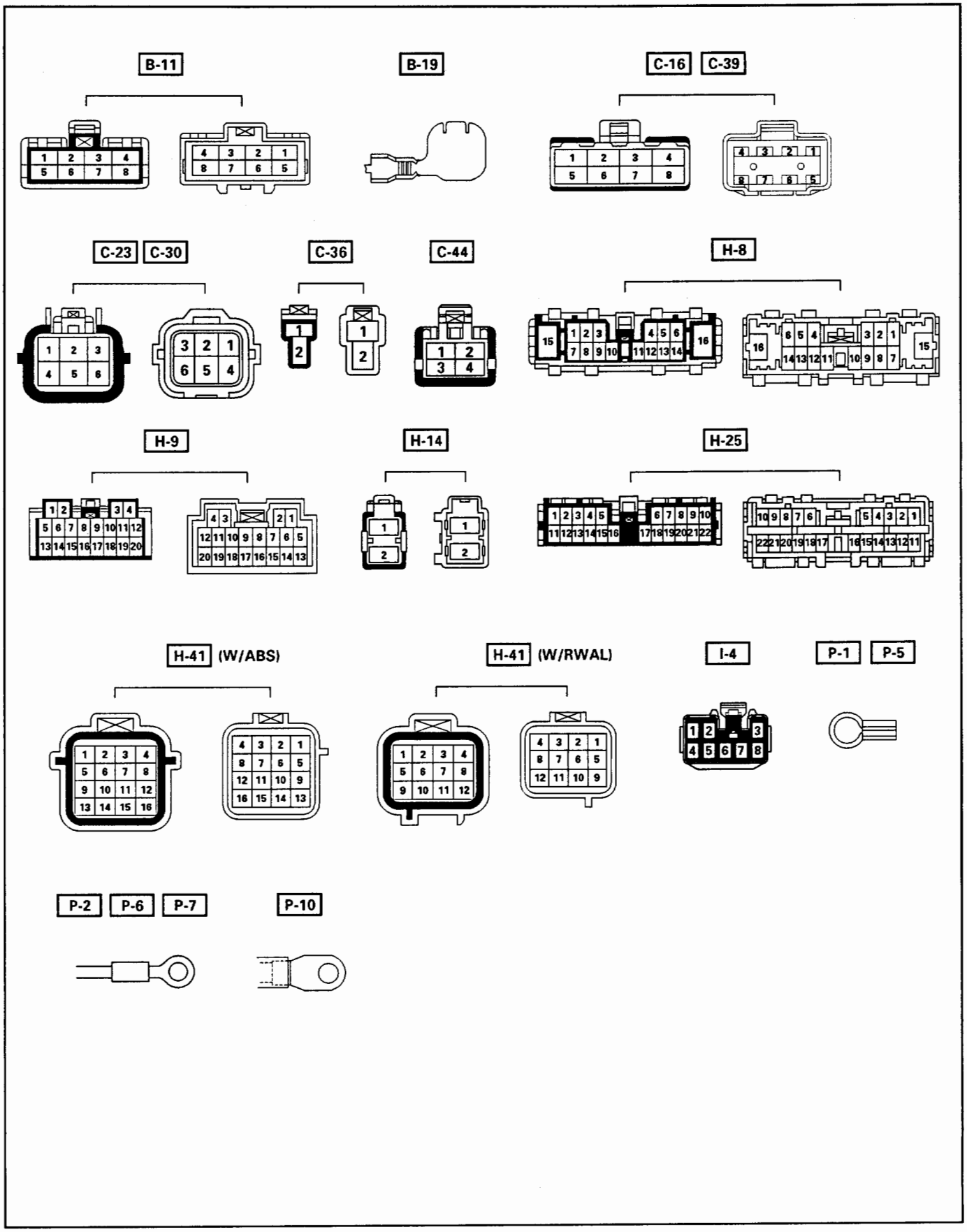

Fig. 8-285

DIAGNOSIS

QUICK CHART FOR CHECK POINTS

Trouble mode \ Check point	Fuse C-7 (10A)	Headlight wiper SW	Headlight wiper motor	Headlight washer motor	Headlight wiper timer	Cable harness
1. Headlight wipers and washer do not operate on either side	○ (1)	○ (3)				○ (2)
2. Wiper on the left (or right) side does not operate		○ (2)	○ (3)			○ (1)
3. Auto-stop function of the wiper on the left (or right) side does not operate		○ (1)	○ (3)			○ (2)
4. Wiper on the left (or right) side does not stop		○ (2)	○ (3)			○ (1)
5. Washer does not operate				○ (2)	○ (3)	○ (1)

NOTE: Figure in parenthesis "( )" indicates the order of inspection.

1. HEADLIGHT WIPERS AND WASHER DO NOT OPERATE ON EITHER SIDE

- IS FUSE C-7 (10A) NORMAL?

YES

- TURN THE STARTER SWITCH ON
- IS THERE BATTERY VOLTAGE APPLIED BETWEEN 11 [H-8] (MALE CONNECTOR OF BODY HARNESS SIDE) AND GROUND?

NO

REPLACE THE FUSE C-7 (10A)

YES

- IS [B-19] GROUNDED SECURELY?

NO

REPAIR A POOR CONNECTION AT THE CONNECTORS OR AN OPEN CIRCUIT BETWEEN FUSE C-7 (10A) AND 11 [H-8]

YES

- DISCONNECT THE HEADLIGHT WIPER SWITCH CONNECTOR
- IS THE CONTINUITY IN THE SWITCH NORMAL?

NO

GROUND IT SECURELY

YES

REPAIR A POOR CONNECTION AT THE CONNECTORS OR AN OPEN CIRCUIT BETWEEN 6 [I-4] AND [B-19]

NO

REPAIR OR REPLACE THE HEADLIGHT WIPER SW

2. WIPER ON THE LEFT (OR RIGHT) SIDE DOES NOT OPERATE

- DISCONNECT THE HEADLIGHT WIPER SWITCH CONNECTOR
- WITH THE SWITCH ON, IS THERE CONTINUITY BETWEEN SWITCH CONNECTOR TERMINALS 7 [I-4] AND 6 [I-4] (5 [I-4] AND 6 [I-4])

YES

- DISCONNECT THE WIPER MOTOR CONNECTOR THAT DOES NOT OPERATE
- TURN THE STARTER SWITCH ON
- IS THERE BATTERY VOLTAGE APPLIED BETWEEN THE HEADLIGHT WIPER MOTOR HARNESS SIDE CONNECTOR 6 [C-23] (6 [C-30]) AND GROUND?

YES

- CONNECT THE MOTOR SIDE CONNECTOR 6 [C-23] (6 [C-30])OF THE HEADLIGHT WIPER MOTOR TO THE BATTERY (+) TERMINAL AND 3 [C-23] (3 [C-30]) TO THE (–) TERMINAL
- DOES THE MOTOR ROTATE?

YES

REPAIR A POOR CONNECTION AT THE CONNECTORS OR AN OPEN CIRCUIT BETWEEN 3 [C-23] AND 7 [I-4] (3 [C-30] AND 5 [I-4])

NO

REPAIR OR REPLACE THE WIPER MOTOR

NO

REPAIR A POOR CONNECTION AT THE CONNECTORS OR AN OPEN CIRCUIT BETWEEN 6 [C-23] (6 [C-30]) AND 11 [H-8]

NO

REPAIR OR REPLACE THE HEADLIGHT WIPER SWITCH

NOTE: The connectors in parenthesis "( )" indicate a check point of the right side headlight wiper motor.

3. AUTO-STOP FUNCTION OF THE WIPER ON THE LEFT (OR RIGHT) SIDE DOES NOT OPERATE

- DISCONNECT THE HEADLIGHT WIPER SWITCH CONNECTOR
- WITH THE SWITCH SET AT "OFF" POSITION, IS THERE CONTINUITY BETWEEN THE SWITCH CONNECTOR TERMINALS 7 [I-4] AND 8 [I-4] (4 [I-4] AND 5 [I-4])?

YES

- DISCONNECT THE HEADLIGHT WIPER MOTOR CONNECTOR
- IS THERE CONTINUITY BETWEEN THE HARNESS SIDE CONNECTORS 3 [C-23] AND 4 [C-23] (3 [C-30] AND 4 [C-30])?

YES

- WITH THE WIPER MOTOR CONNECTOR 6 [C-23] (6 [C-30]) CONNECTED TO THE BATTERY (+) TERMINAL, AND 3 [C-23] (3 [C-30]) TO THE (–) TERMINAL, ROTATE THE MOTOR.
- WHILE ROTATING THE MOTOR, CHANGE THE CONNECTION OF THE (–) TERMINAL TO 2 [C-23] (2 [C-30]) AND CONNECT 3 [C-23] (3 [C-30]) TO 4 [C-23] (4 [C-30])
- DOES THE MOTOR STOP AT THE AUTO-STOP POSITION?

YES

REPAIR A POOR CONNECTION AT THE CONNECTORS OR AN OPEN CIRCUIT BETWEEN 2 [C-23] (2 [C-30]) AND 1 [C-16]

NO

- REPAIR OR REPLACE THE HEADLIGHT WIPER MOTOR

NO

REPAIR A POOR CONNECTION AT THE CONNECTORS OR AN OPEN CIRCUIT BETWEEN 4 [C-23] AND 8 [I-4] (4 [C-30] AND 4 [I-4])

NO

REPAIR OR REPLACE THE SWITCH

NOTE: The connectors in parenthesis "( )" indicate a check point of the right side headlight wiper motor.

: If headlight wiper motor auto-stop on both sides does not function, it may be attributable either to headlight wiper switch trouble or to poor grounding of connector 1 [C-16].

4. WIPER ON THE LEFT (OR RIGHT) SIDE DOES NOT STOP

- STOP THE WIPER MOTOR AT THE AUTO-STOP POSITION
- DISCONNECT THE HEADLIGHT WIPER SWITCH CONNECTOR
- TURN THE STARTER SWITCH ON
- DOES THE WIPER MOTOR REMAIN STOPPED?

YES

- IS THE CONTINUITY IN THE HEADLIGHT WIPER SWITCH NORMAL?

NO

REPAIR A SHORT CIRCUIT BETWEEN 3 [C-23] AND 7 [I-4] (3 [C-30] AND 5 [I-4])

YES

- DISCONNECT THE WIPER MOTOR CONNECTOR
- IS THERE CONTINUITY BETWEEN THE MOTOR SIDE CONNECTOR TERMINALS 4 [C-23] AND 2 [C-23] (4 [C-30] AND 3 [C-30])?

NO

REPAIR OR REPLACE THE SWITCH

YES

REPAIR THE WIPER MOTOR AUTO-STOP MECHANISM, OR REPLACE THE MOTOR

NO

REPAIR A SHORT CIRCUIT BETWEEN 4 [C-23] AND 8 [I-4] (4 [C-30] AND 4 [I-4])

NOTE: The connectors in parenthesis "( )" indicate a check point of the right side headlight wiper.

5. WASHER MOTOR DOES NOT OPERATE

- DISCONNECT THE HEADLIGHT WASHER MOTOR CONNECTOR
- TURN THE STARTER SWITCH ON
- IS THERE BATTERY VOLTAGE APPLIED BETWEEN THE WASHER MOTOR HARNESS SIDE CONNECTOR 1 C-36 AND THE GROUND?

YES

- CONNECT THE MOTOR SIDE CONNECTOR TERMINAL 1 C-36 TO THE BATTERY (+) TERMINAL, AND 2 C-36 TO THE (–) TERMINAL
- DOES THE MOTOR ROTATE?

NO

REPAIR A POOR CONNECTION OF THE CONNECTORS OR AN OPEN CIRCUIT BETWEEN 1 C-36 AND 11 H-8

YES

- DISCONNET THE HEADLIGHT WIPER TIMER CONNECTOR
- TURN THE STARTER SWITCH ON
- IS THERE BATTERY VOLTAGE APPLIED BETWEEN THE TIMER HARNESS SIDE CONNECTOR 1 C-44 AND THE GROUND?

NO

REPAIR OR REPLACE THE WASHER MOTOR

YES

- IS THERE BATTERY VOLTAGE APPLIED BETWEEN THE HARNESS SIDE CONNECTOR 4 C-44 AND THE GROUND?

NO

REPAIR A POOR CONNECTION OF THE CONNECTORS OR AN OPEN CIRCUIT BETWEEN 1 C-44 AND 11 H-8

YES

- IS 6 C-39 GROUNDED SECURELY?

NO

REPAIR A POOR CONNECTION OF THE CONNECTORS OR AN OPEN CIRCUIT BETWEEN 2 C-36 AND 4 C-44

YES

- IS THERE CONTINUITY BETWEEN THE HARNESS SIDE CONNECTORS 2 C-44 AND 6 C-39 , 5 C-23 AND 3 C-44 ?

NO

GROUND IT SECURELY

YES

REPLACE THE HEADLIGHT WIPER TIMER

NO

REPAIR A POOR CONNECTION OF THE CONNECTORS OR AN OPEN CIRCUIT IN THE CIRCUIT THAT HAS NO CONTINUITY

STARTER SWITCH

Refer to "START AND CHARGING" of this section.

HEADLIGHT WIPER SWITCH (FIG. 8-286)

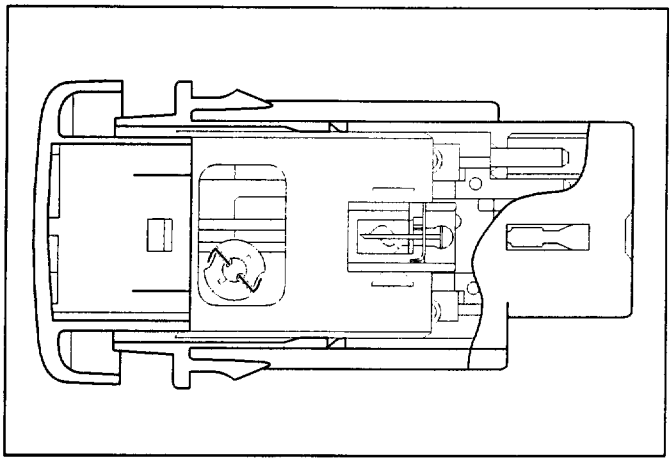

Fig. 8-286

The start and stop of the wiper motor and the washer motor can be controlled by operating this switch with the starter switch on.
The switch returns to its original position with the power off when it is released.

INSPECTION

Check the continuity between the connector terminals while operating the switch. (Fig. 8-287)
Replace the switch when the result of inspection is found abnormal.

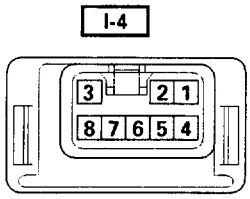

Terminal No. / SW position	4	5	6	7	8	2	3
OFF	○—○			○—○			
ON		○—○—○					

Fig. 8-287

REMOVAL (FIG. 8-288)

Preparation: Disconnect the battery ground cable.

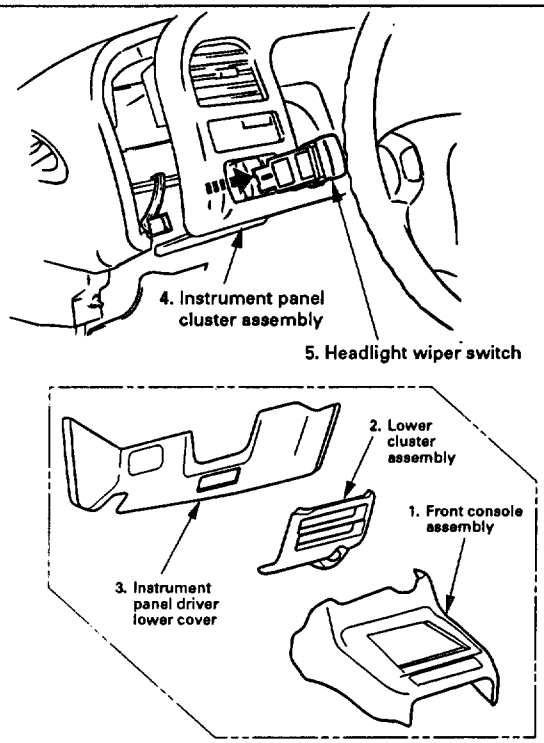

This illustration is based on fog light switch removal.

Fig. 8-288

1. **Front console assembly**
2. **Lower cluster assembly**
3. **Instrument panel driver lower cover**
4. **Instrument panel cluster assembly**
   - Refer to FOG LIGHT SWITCH removal steps in this section.
5. **Headlight wiper switch**
   - To remove the switch, pushing the lock from the back side of the cluster assembly.

INSTALLATION

To install, follow the removal steps in the reverse order, noting the following point:

1. Push the switch in with your fingers until it gets locked securely.

HEADLIGHT WIPER ARM & BLADE

REMOVAL (Fig. 8-289)

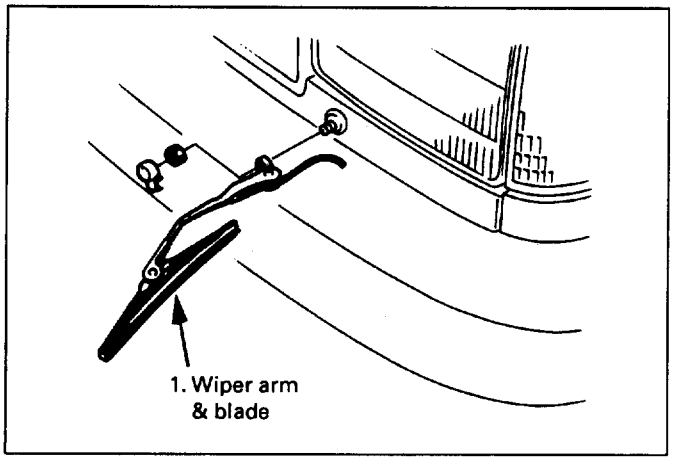

Fig. 8-289

1. **Wiper arm & blade**
   - Remove the wiper arm nut.
   - Remove the washer hose.

INSTALLATION

To install, follow the removal steps in the reverse order, noting the following point:

1. Tighten the wiper arm nut to the specified torque.

Nut torque	N·m (lb·in)	5 (43)

HEADLIGHT WIPER MOTOR

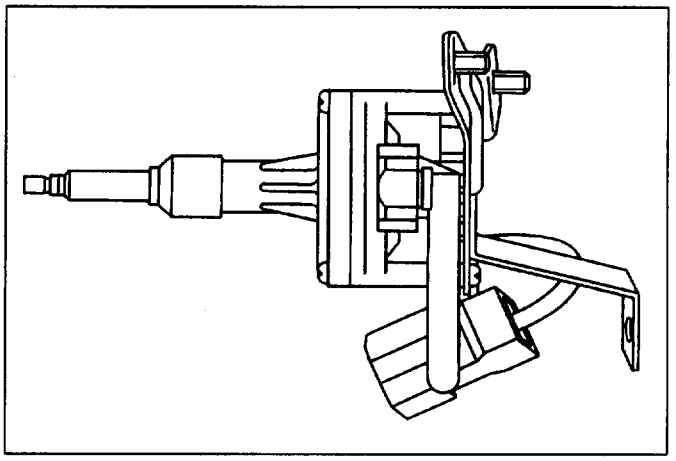

Fig. 8-290

INSPECTION (FIG. 8-290)

Operation test

With the headlight wiper motor connector terminal 6 C-23 (left) or 6 C-30 (right) connected to the battery (+) terminal, and the terminal 3 C-23 (left) or 3 C-30 (right) to the (–) terminal, check to see if the motor rotates.

Auto stop operation test

Disconnect the battery (–) terminal while the motor in rotation, and stop the motor at any position other than the auto stop position. Reconnect the disconnected (–) terminal to 2 C-23 (left) or 2 C-30 (right), with 3 C-23 connected to 4 C-23 (for the motor on the right, 3 C-30 connected to 4 C-30). Then check to see if the motor stops at the auto stop position.

Repair or replace the motor when the result of inspection is found abnormal.

REMOVAL (FIG. 8-291)

Preparation: Disconnect the battery ground cable.

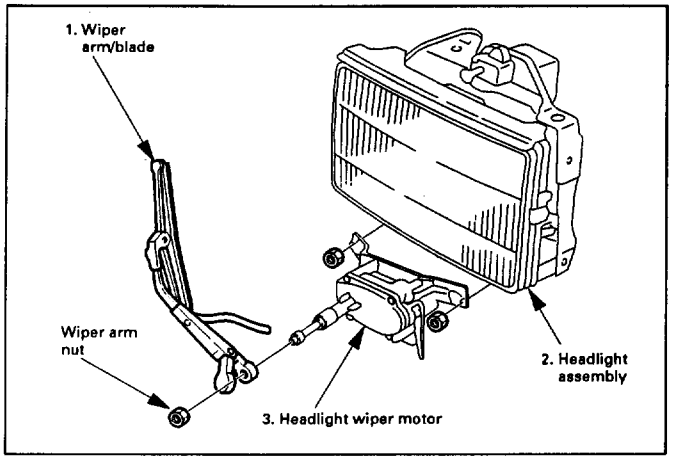

Fig. 8-291

1. **Wiper arm/blade**
   - Remove the wiper arm nut.
2. **Headlight assembly**
   - Refer to HEADLIGHT removal steps in this section.
3. **Headlight wiper motor**
   - Remove 2 nuts and screw.

INSTALLATION

To install, follow the removal steps in the reverse order, noting the following point:

1. Tighten the wiper arm nut to the specified torque.

Nut torque	N·m (lb·in)	5 (43)

2. Make sure that the motor stops at auto stop position prior to installing the wiper arm & blade to the motor shaft.

HEADLIGHT WASHER MOTOR

INSPECTION

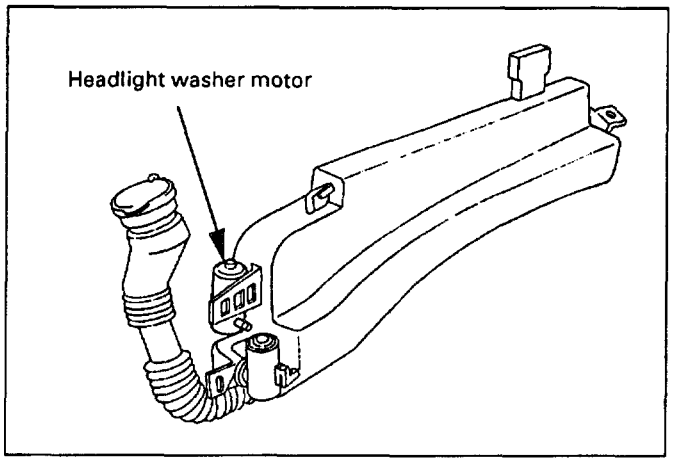

Fig. 8-292

With the washer motor connector 1 C-36 connected to the battery (+) terminal, and the connector 2 C-36 to the battery (–) terminal, check to see if the motor rotates smoothly. (Fig. 8-292)
Repair or replace the motor when the result of inspection is found abnormal.

REMOVAL AND INSTALLATION

Refer to the removal and installation steps of the windshield washer tank/motor under "WINDSHIELD WIPER/WASHER AND REAR WIPER/WASHER" in this section.

HEADLIGHT WIPER TIMER

REMOVAL (FIG. 8-293)

Preparation: Disconnect the battery ground cable.

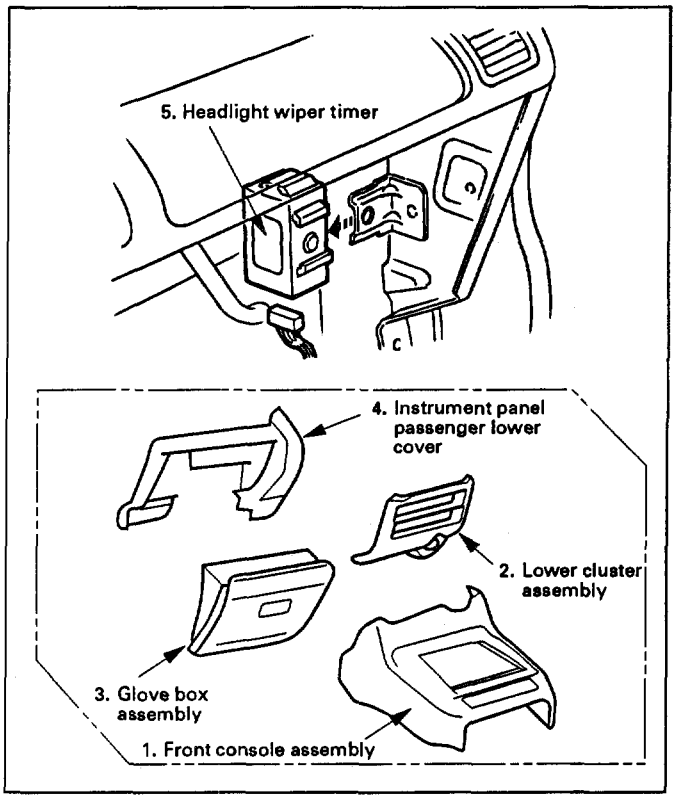

Fig. 8-293

1. **Front console assembly**
2. **Lower cluster assembly**
3. **Glove box assembly**
4. **Instrument panel passenger lower cover**
   - Refer to INSTRUMENT PANEL ASSEMBLY in Section 10 BODY.
5. **Headlight wiper timer**

INSTALLATION

To install, follow the removal steps in the reverse order.

MEMO

AUDIO, AUTO ANTENNA, CIGARETTE LIGHTER AND DIGITAL CLOCK

GENERAL DESCRIPTION

The audio circuit is designed for the current to flow through the receiver circuit when the radio switch is turned on with the starter switch in"ACC" or "ON". Current runs through the memory circuit of the audio regardless of the position of the starter switch.
The radio antenna operates in connection to the radio switch. The antenna rod goes up when the switch is on and goes down to be stored in the fender with the switch off. The antenna rod also goes down when the starter switch is turned off with radio on.
Refer to Section 9A "RADIO" for details.
When the cigarette lighter is pushed in with the starter switch at either "ACC" or "ON" position, a circuit is formed in the cigarette lighter case to heat the lighter coil. The cigarette lighter is sprung back to its original position after the lighter coil is heated.

OPERATION OF AUTO ANTENNA

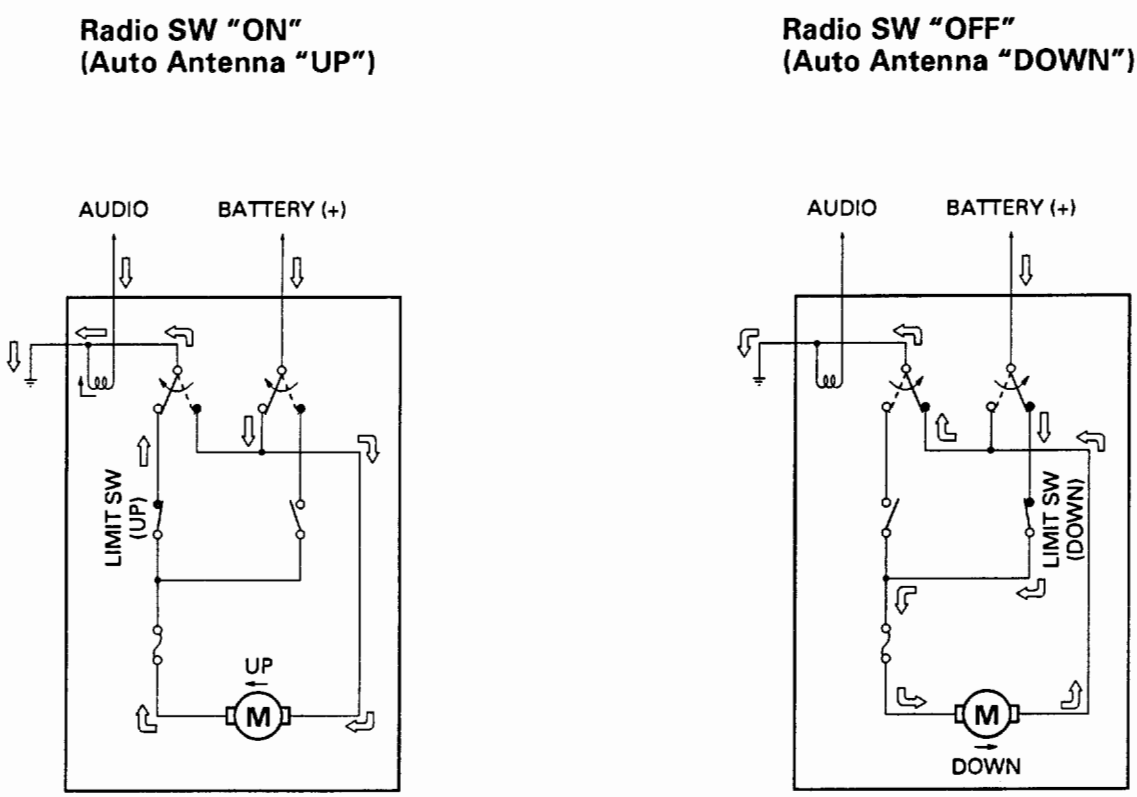

NOTE: Arrow marks " ⇨ " indicate the direction of current

Fig. 8-294

PARTS LOCATION

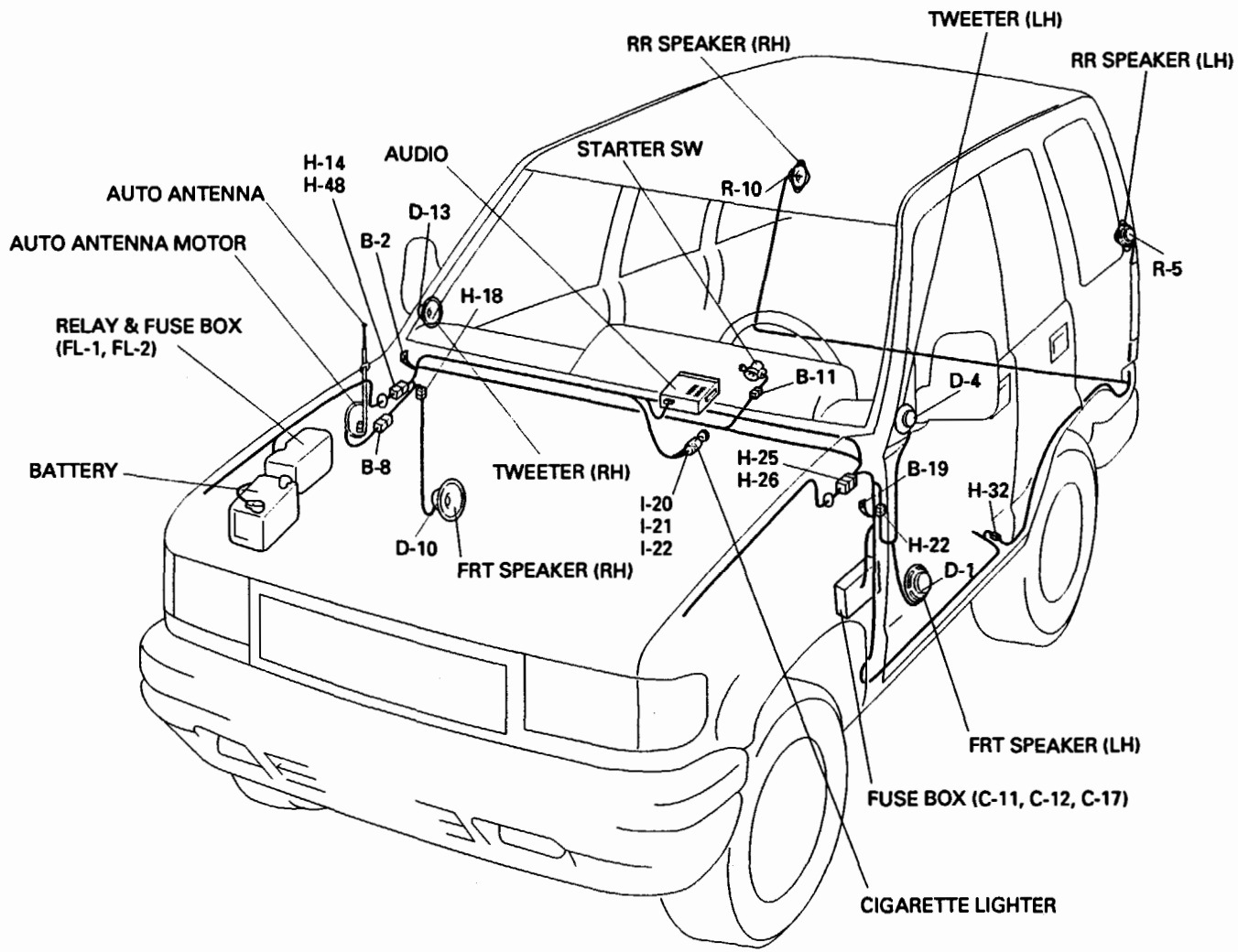

Fig. 295

CIRCUIT DIAGRAM

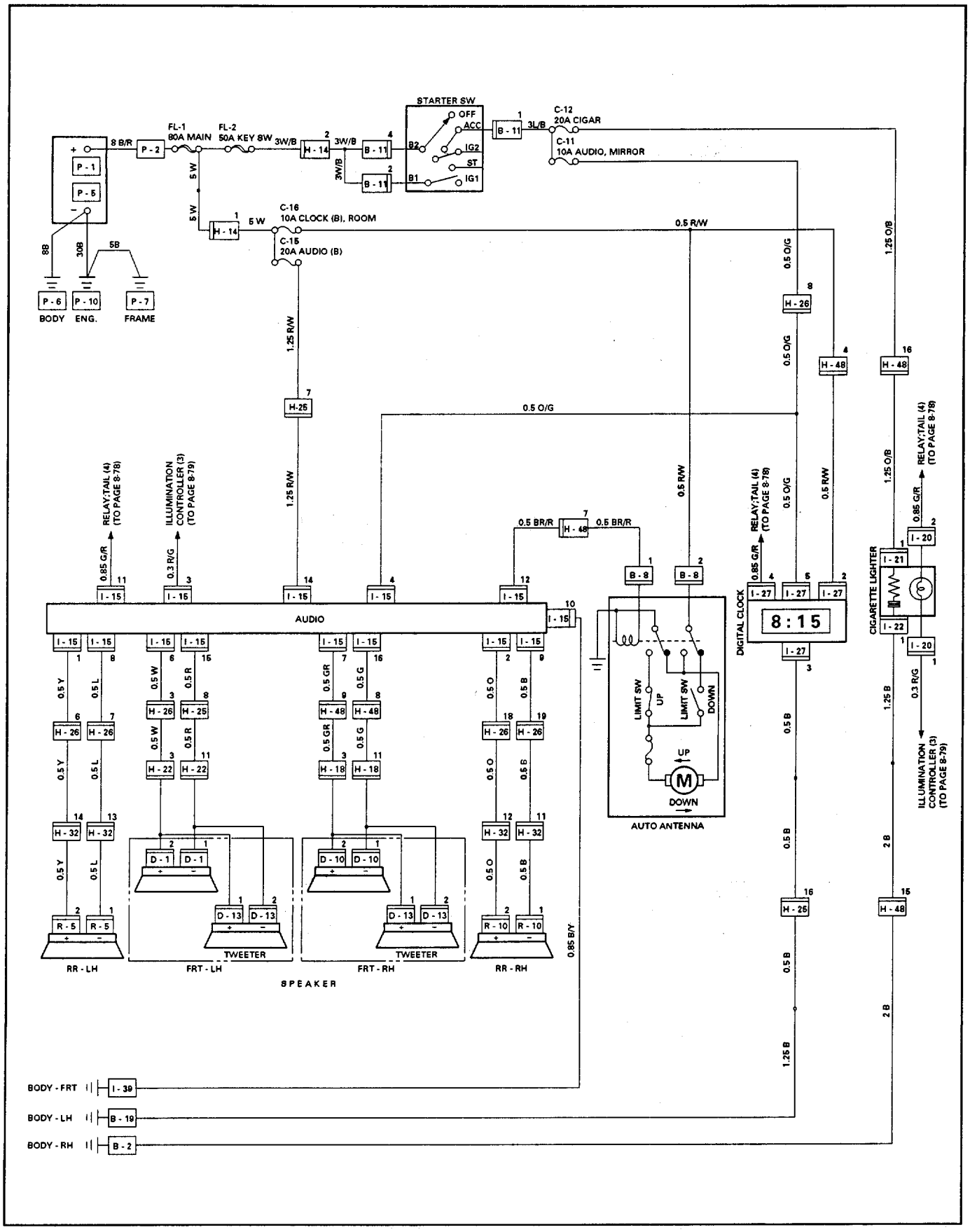

Fig. 8-296

CONNECTOR LIST

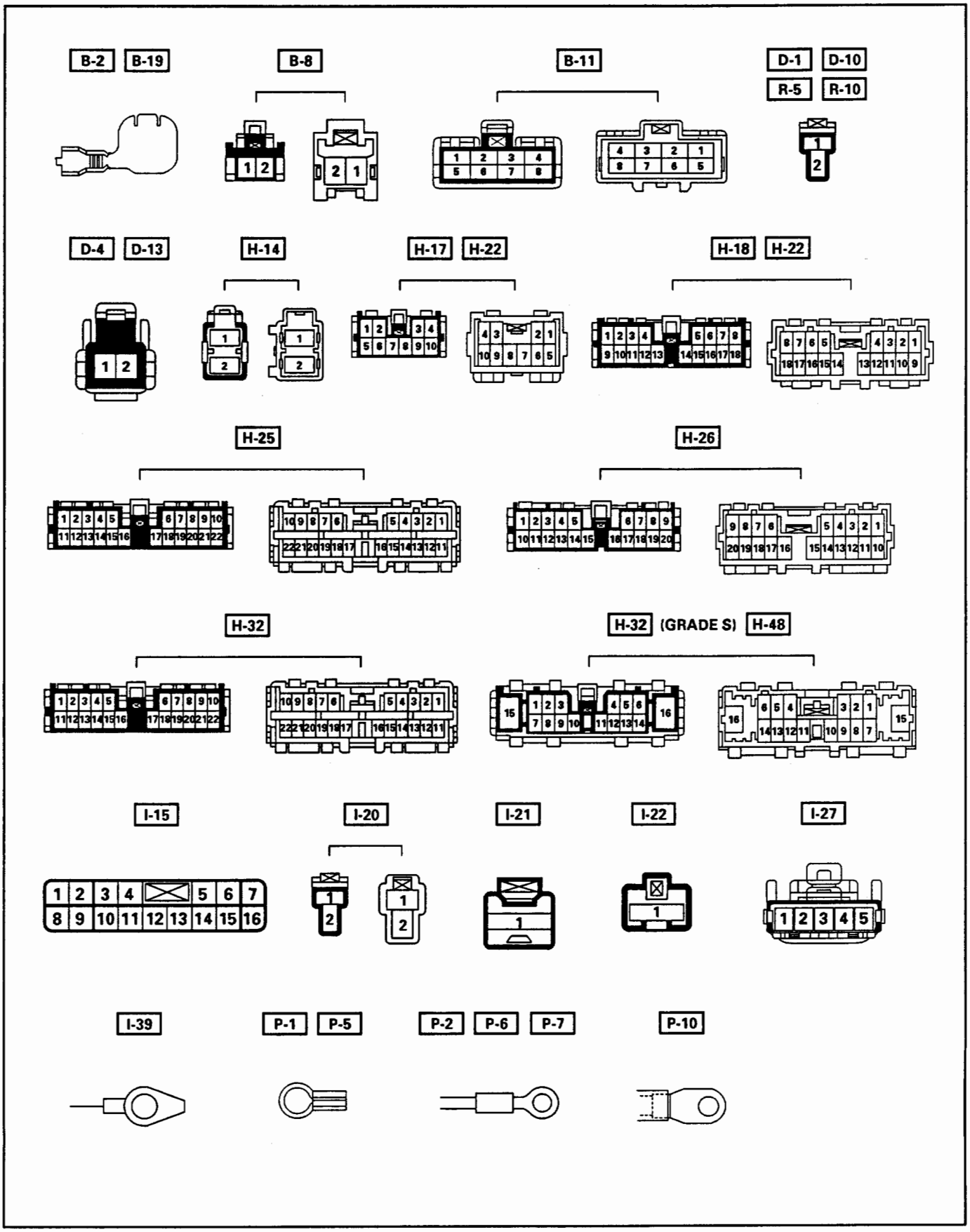

Fig. 8-297

DIAGNOSIS

1. CIGARETTE LIGHTER DOES NOT HEAT SUFFICIENTLY

- IS FUSE C-12 (20A) NORMAL?
  - NO → REPLACE THE FUSE
  - YES → IS B-2 SECURELY GROUNDED?
    - NO → GROUND IT SECURELY
    - YES → REMOVE THE CIGARETTE LIGHTER
      - SET THE STARTER SWITCH TO EITHER "ACC" OR "ON" POSITION
      - IS THE BATTERY VOLTAGE APPLIED BETWEEN THE BIMETAL AT THE CENTER OF THE CASE AND THE CASE?
        - NO → REPAIR A POOR CONNECTION AT THE CONNECTORS OR AN OPEN CIRCUIT BETWEEN FUSE C-12 (20A) AND 1 I-21
        - YES → REPLACE THE CIGARETTE LIGHTER ASSEMBLY

2. CIGARETTE LIGHTER DOES NOT SPRING OUT AFTER BEING HEATED

- IS THE LIGHTER DEFORMED?
  - YES → REPLACE THE LIGHTER
  - NO → IS THE SOCKET DEFORMED?
    - YES → REPLACE THE CIGARETTE LIGHTER ASSEMBLY

AUDIO

AUTO ANTENNA

Refer to Section 9A "RADIO" for details.

CIGARETTE LIGHTER

INSPECTION

When removing the cigarette lighter with the starter switch set to the "ACC" position, check to see if there is any battery voltage applied between the bimetal at the center of the case and the case. (Fig. 8-298)
Repair or replace the cigarette lighter when the result of inspection is found abnormal.

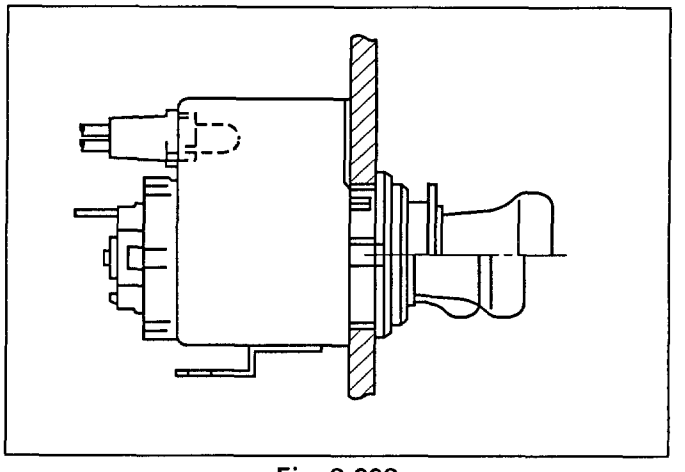

Fig. 8-298

REMOVAL (FIG. 8-299)

Preparation: Disconnect the battery ground cable.

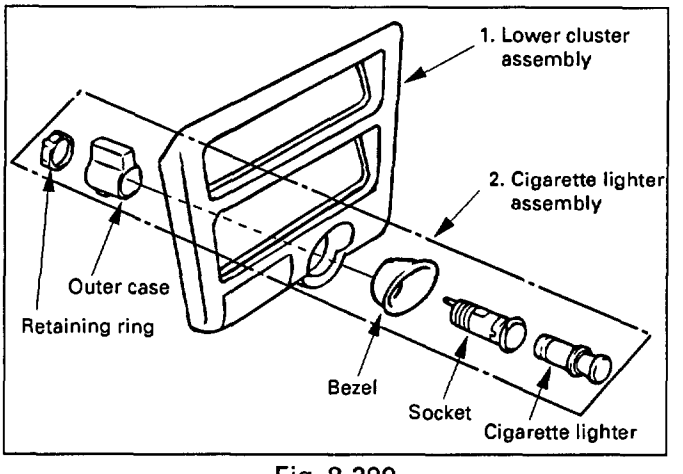

Fig. 8-299

1. **Lower cluster assembly**
   - Refer to LOWER CLUSTER ASSEMBLY in Section 10 BODY.
2. **Cigarette lighter assembly**
   - Disconnect the connectors at two locations.
   - Remove the socket of the illumination light.
   - Remove the retaining ring while turning it counterclockwise.
   - Remove the outer case of the cigarette lighter.
   - Remove the cigarette lighter and the socket.
   - Remove the bezel.

INSTALLATION

To install, follow the removal steps in the reverse order, noting the following point.

1. When installing the bezel, align the projected portion of the socket with the notch of the bezel.

DIGITAL CLOCK

REMOVAL (FIG. 8-300)

Preparation: Disconnect the battery ground cable.

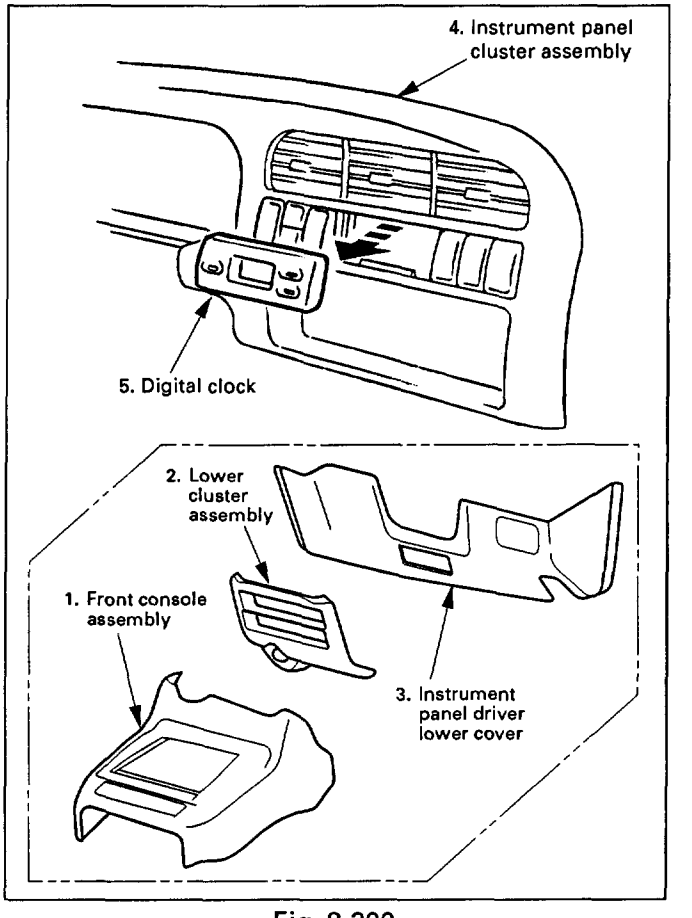

Fig. 8-300

1. **Front console assembly**
2. **Lower cluster assembly**
3. **Instrument panel driver lower cover**
4. **Instrument panel cluster assembly**
   - Refer to FOG LIGHT SWITCH removal steps in this section.
5. **Digital clock**
   - To remove the clock, pushing the lock from the back side of the cluster assembly.

INSTALLATION

To install, follow the removal steps in the reverse order.

MEMO

POWER DOOR MIRROR

GENERAL DESCRIPTION

The circuit consists of the starter switch, door mirror control switch, folding switch, defogger switch and door mirrors on both sides.

The door mirror switch consists of the control switch, folding switch and defogger switch. When the control switch is operated with the starter switch at either "ACC" or "ON" position, the motors incorporated in the door mirrors on both sides rotates to allow the horizontal and vertical adjustment of mirror angles. The folding switch can be used to fold the mirror and return it to its original position.

When turning on the door mirror defogger switch with the starter switch at "ON" position, built-in heater in the mirror is activated to perform the defogger function.

OPERATION OF DOOR MIRROR MOTOR

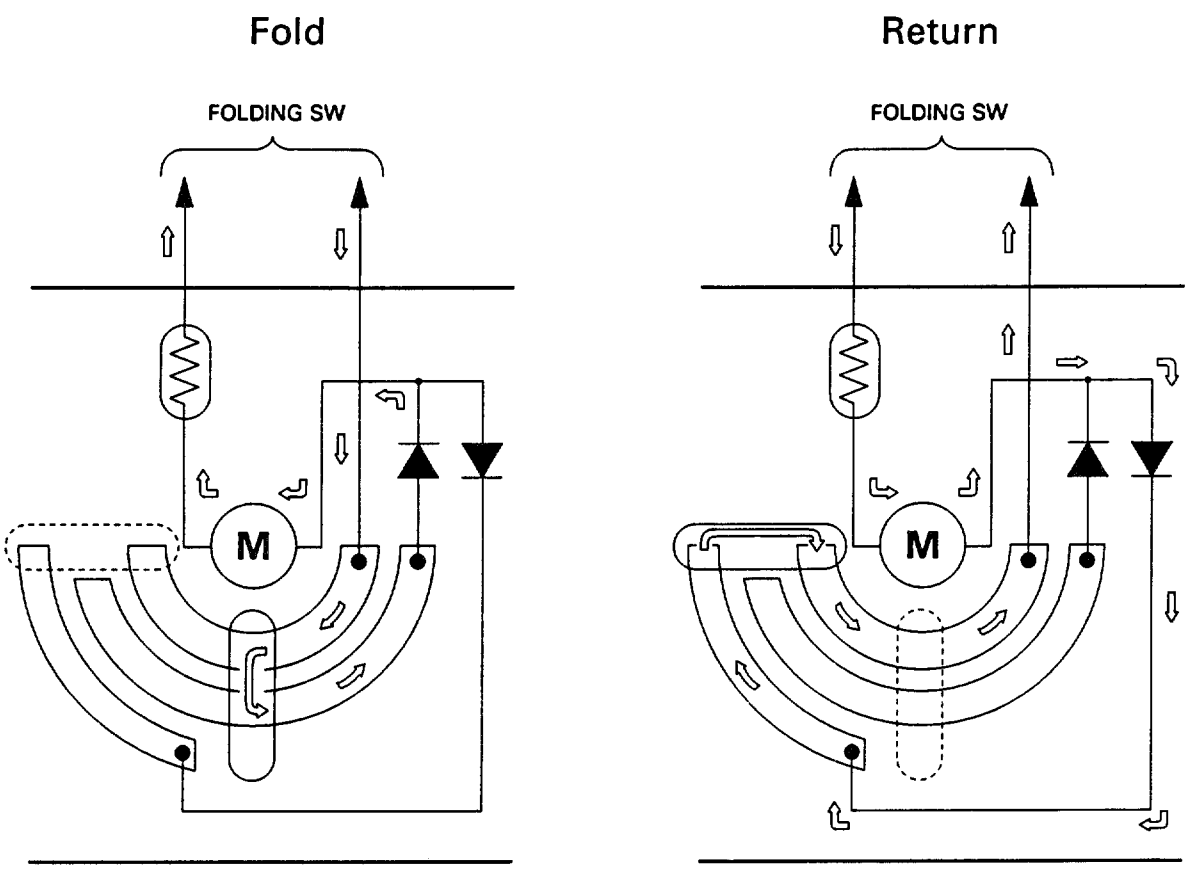

NOTE: Arrow marks " ⇨ " indicate the direction of current

Fig. 8-301

PARTS LOCATION

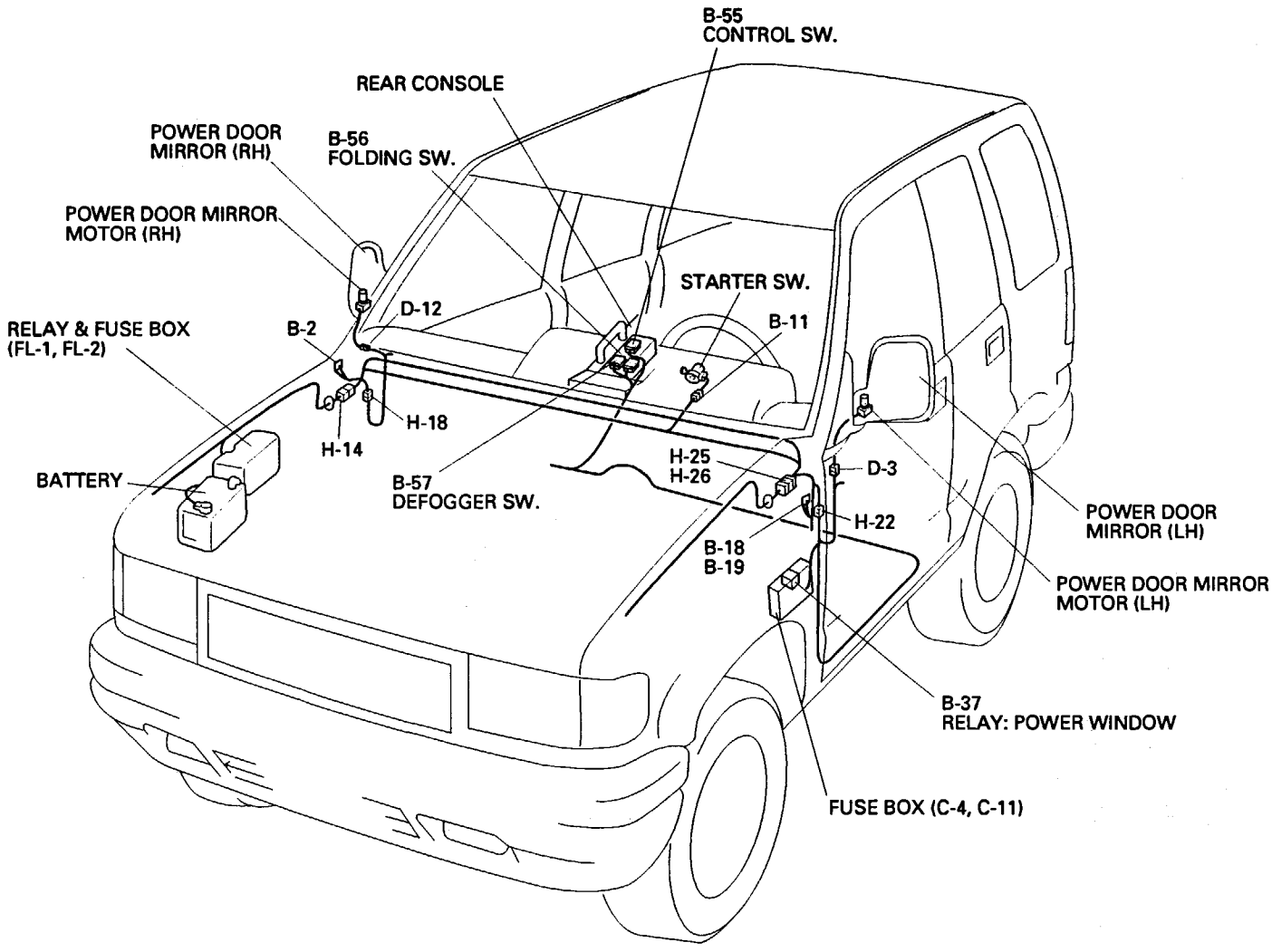

Fig. 8-302

CIRCUIT DIAGRAM

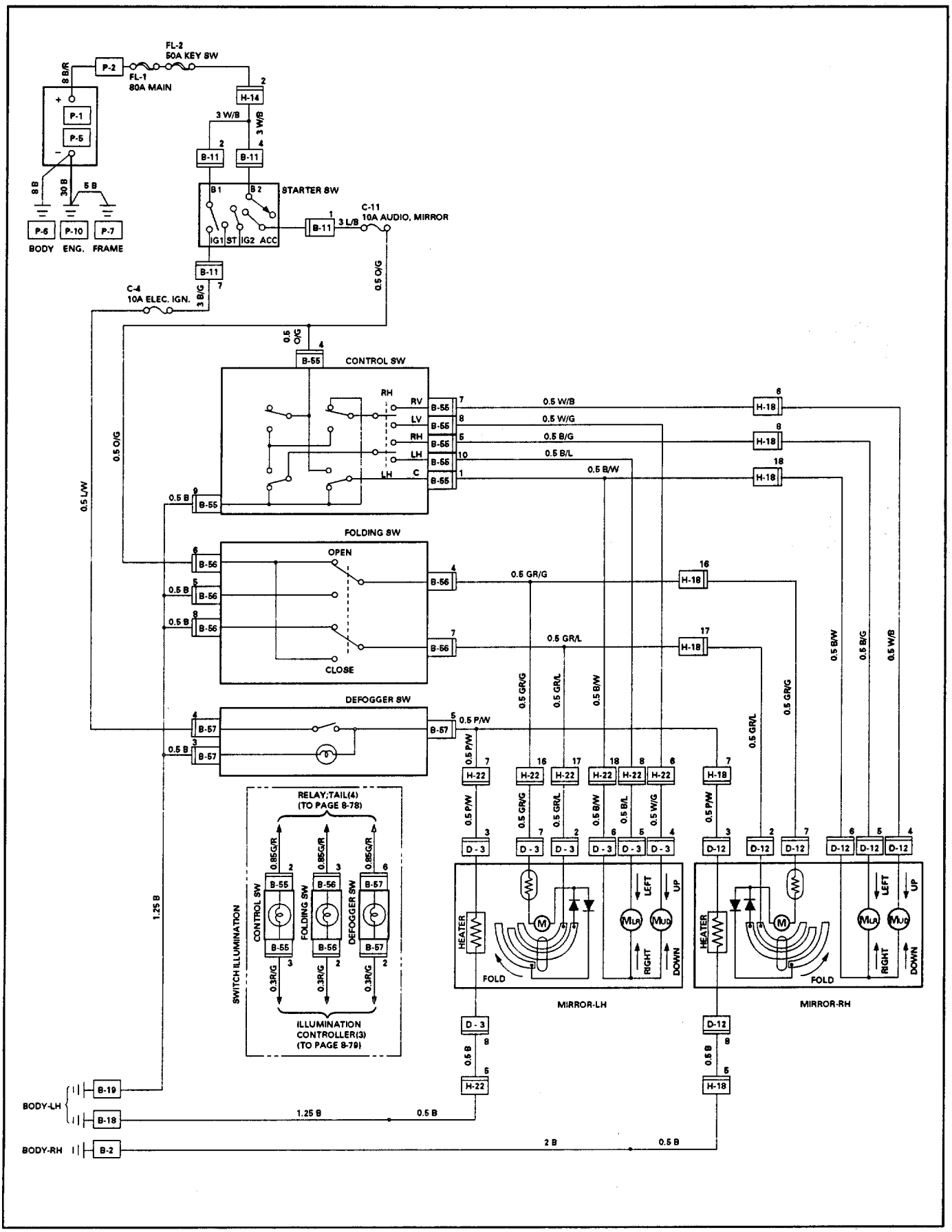

Fig. 8-303

CONNECTOR LIST

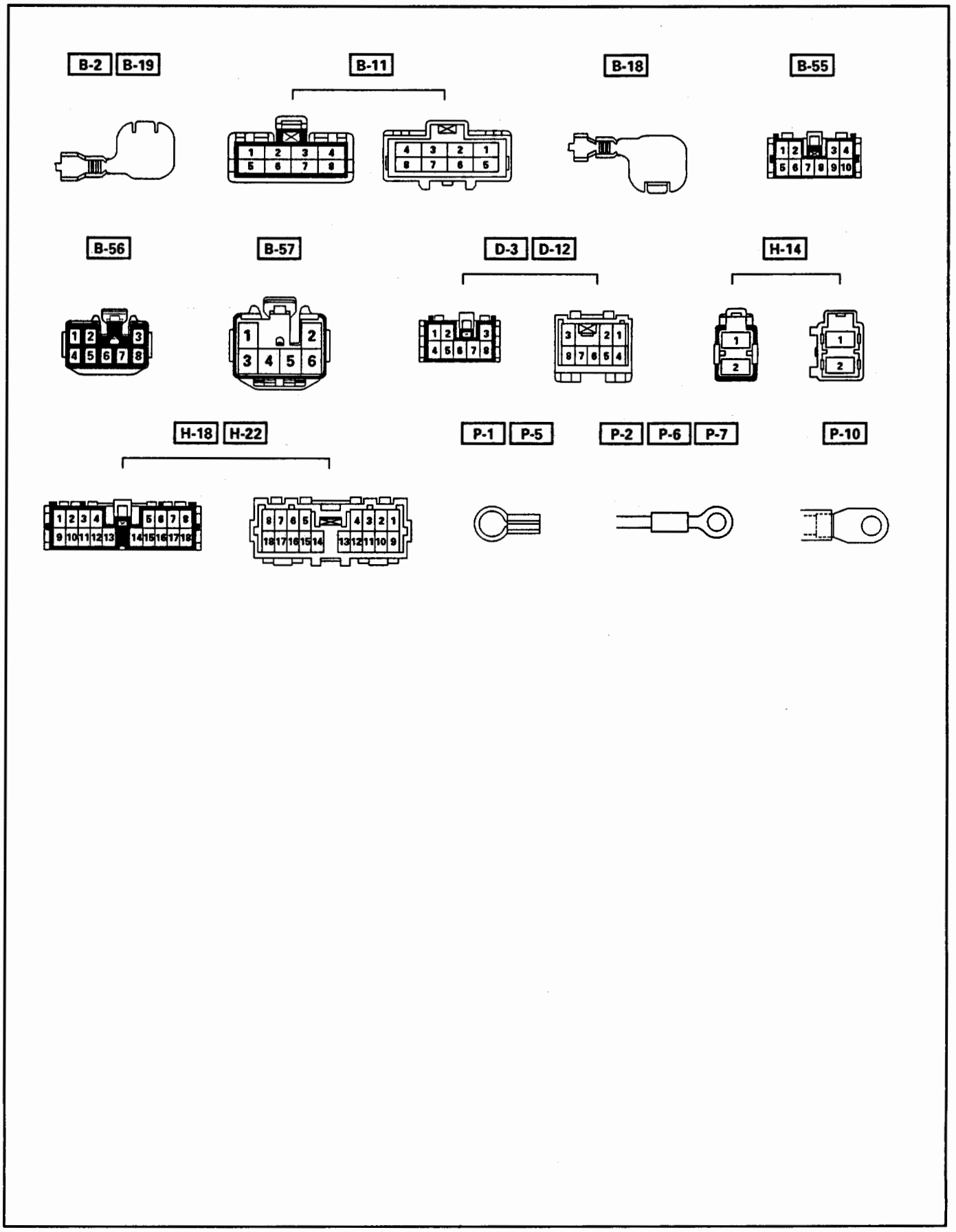

Fig. 8-304

DIAGNOSIS

QUICK CHART FOR CHECK POINTS

SW	Trouble mode \ Check point	Fuse		Door mirror SW			Door mirror		Cable harness
		C-4 (10A)	C-11 (10A)	Control	Folding	Defogger	LH	RH	
Control switch	1. Mirrors on both sides do not operate		○ (1)	○ (3)					○ (2)
	2. Mirror on the left (or right) side does not operate			○ (1)			○ (2)	○ (2)	○ (3)
	3. Mirrors on both sides operate only in the vertical (or horizontal) direction			○ (1)					
	4. Mirror on the left side operates only in the vertical (or horizontal) direction			○ (1)			○ (2)		○ (3)
	5. Mirror on the right side operates only in the vertical (or horizontal) direction			○ (1)				○ (2)	○ (3)
Folding switch	6. Folding mechanism of the both mirrors does not operate		○ (1)		○ (2)				○ (3)
	7. Folding mechanism of the mirror on the left (or right) side does not operate				○ (2)		○ (1)	○ (1)	○ (3)
Defogger switch	8. Mirror defoggers on both sides do not operate	○ (1)				○ (2)			○ (3)
	9. Mirror defogger on the left (or right) side does not operate						○ (2)	○ (2)	○ (1)

NOTE: Figure in parenthesis "( )" indicates the order of inspection.

1. MIRRORS ON BOTH SIDES DO NOT OPERATE

- IS THE FUSE C-11 (10A) NORMAL?

YES

- IS B-19 SECURELY GROUNDED?

YES

- REMOVE THE CONNECTORS OF THE DOOR MIRROR CONTROL SW
- SET THE STARTER SW TO "ACC" POSITION
- IS BATTERY VOLTAGE APPLIED BETWEEN THE HARNESS SIDE CONNECTOR 4 B-55 AND THE GROUND?

YES

- IS THERE ANY CONTINUITY BETWEEN THE HARNESS SIDE CONNECTORS 9 B-55 AND B-19 ?

YES

- IS THE CONTINUITY IN THE DOOR MIRROR CONTROL SWITCH NORMAL?

YES

REPAIR A POOR CONNECTION AT CONNECTORS OR AN OPEN CIRCUIT BETWEEN 3 I-2 AND 18 H-18

NO

REPLACE THE DOOR MIRROR CONTROL SW

NO

REPAIR A POOR CONNECTION AT CONNECTORS OR A OPEN CIRCUIT IN THE CIRCUIT

NO

REPAIR A POOR CONNECTION AT CONNECTORS OR AN OPEN CIRCUIT BETWEEN THE FUSE C-11 (10A) AND 4 B-55 (DOOR MIRROR SW)

NO

GROUND IT SECURELY

NO

REPLACE THE FUSE

2. MIRROR ON THE LEFT (OR RIGHT) SIDE DOES NOT OPERATE

- IS THE DOOR MIRROR CONTROL SW NORMAL?
  - NO → REPAIR OR REPLACE THE DOOR MIRROR CONTROL SW
  - YES → IS THE DOOR MIRROR ON THE LEFT (OR RIGHT) SIDE NORMAL?
    - NO → REPAIR OR REPLACE THE DOOR MIRROR
    - YES → REPAIR A POOR CONNECTION OF CONNECTORS OR AN OPEN CIRCUIT BETWEEN 1 [B-55] AND 6 [D-3] (OR 1 [B-55] AND 6 [D-12])

3. MIRRORS ON BOTH SIDES OPERATE ONLY IN THE VERTICAL (OR HORIZONTAL) DIRECTION

REPAIR OR REPLACE THE DOOR MIRROR CONTROL SW

4. MIRROR ON THE LEFT SIDE OPERATES ONLY IN THE VERTICAL (OR HORIZONTAL) DIRECTION

- IS THE CONTINUITY IN THE DOOR MIRROR CONTROL SWITCH NORMAL?
  - NO → REPAIR OR REPLACE THE DOOR MIRROR CONTROL SWITCH
  - YES → IS THE DOOR MIRROR NORMAL?
    - NO → REPAIR OR REPLACE THE DOOR MIRROR
    - YES → REPAIR A POOR CONNECTION OF CONNECTORS OR AN OPEN CIRCUIT BETWEEN 8 [B-55] AND 4 [D-3] (OR 10 [B-55] AND 5 [D-3])

NOTE: Connectors shown in the parenthesis "( )" indicate a check point of the mirror that does not operate in the horizontal direction.

5. MIRROR ON THE RIGHT SIDE OPERATES ONLY IN THE VERTICAL (OR HORIZONTAL) DIRECTION

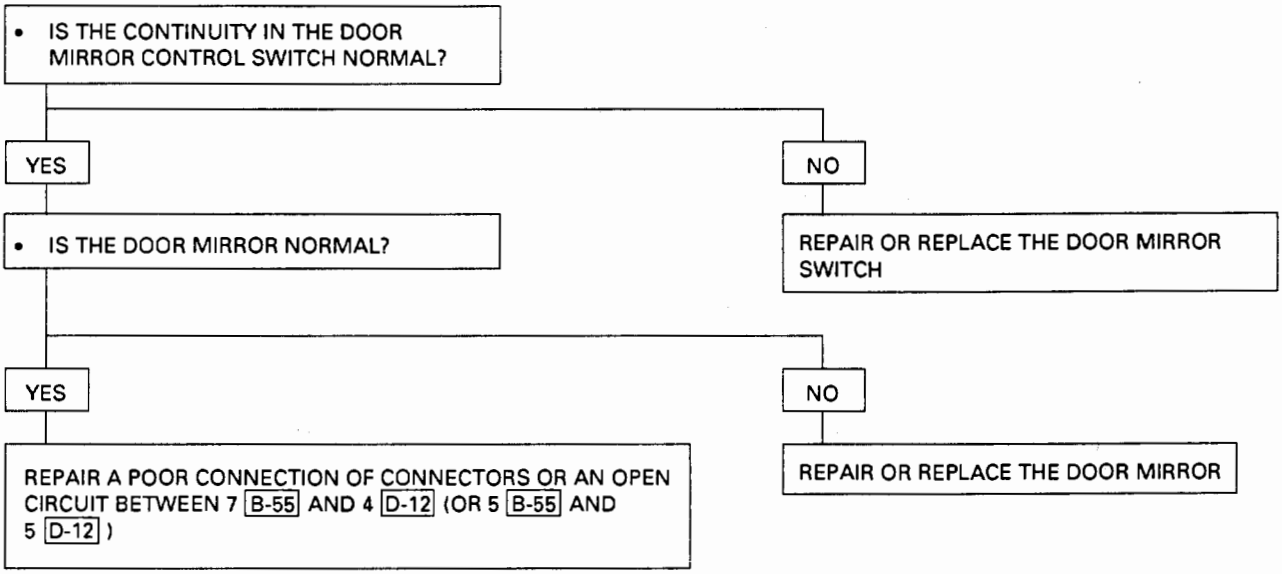

NOTE: Connectors shown in the parenthesis "( )" indicate a check point of the mirror that does not operate in the horizontal direction.

6. FOLDING MECHANISM OF THE BOTH MIRRORS DOES NOT OPERATE

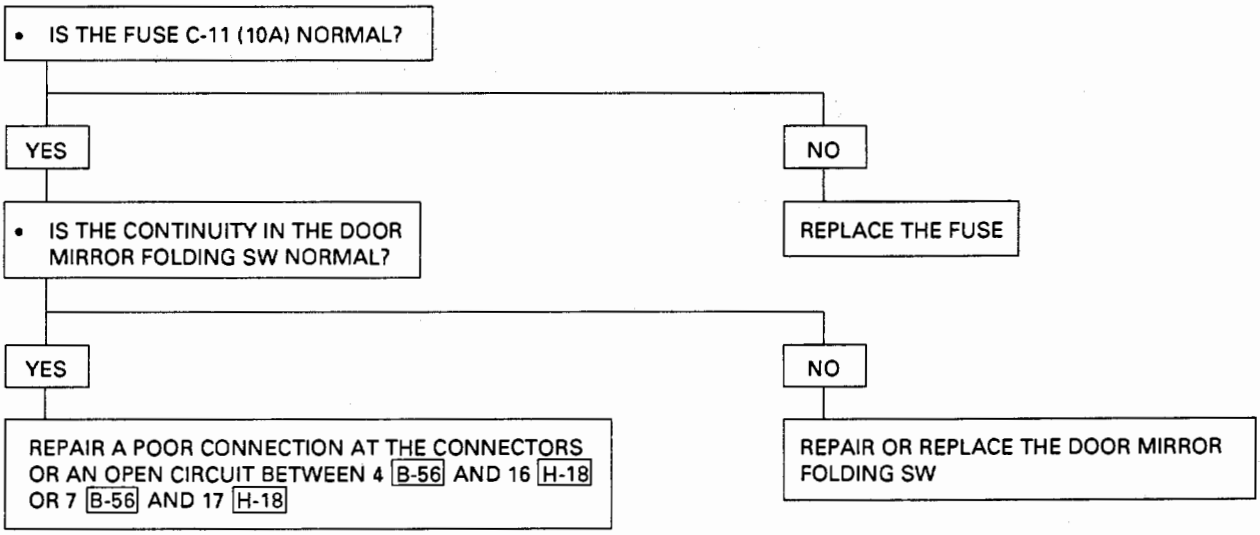

7. FOLDING MECHANISM OF THE MIRROR ON THE LEFT (OR RIGHT) SIDE DOES NOT OPERATE

- DISCONNECT THE CONNECTOR OF THE DOOR MIRROR
- CONNECT THE DOOR MIRROR CONNECTOR 2 [D-3] (2 [D-12]) TO THE BATTERY (+) TERMINAL AND 7 [D-3] (7 [D-12]) TO THE BATTERY (–) TERMINAL DOES THE MIRROR OPERATE TO THE FOLDING DIRECTION.

  (CONNECT THE DOOR MIRROR CONNECTOR 7 [D-3] (7 [D-12]) TO THE BATTERY (+) TERMINAL AND 2 [D-3] (2 [D-12]) TO THE BATTERY (–) TERMINAL DOES THE MIRROR OPERATE TO THE DRIVING POSITION)

YES

- IS THE FOLDING SW NORMAL?

YES

REPAIR A POOR CONNECTION OF THE CONNECTORS OR AN OPEN CIRCUIT BETWEEN 7 [B-56] AND 2 [D-3] (7 [B-56] AND 2 [D-12]) OR 4 [B-56] AND 7 [D-3] (4 [B-56] AND 7 [D-12])

NO

REPAIR OR REPLACE THE FOLDING SW

NO

REPAIR OR REPLACE THE DOOR MIRROR

NOTE: Connectors shown in the parenthesis "( )" indicate a check point of the door mirror on the right side that does not operate.

8. MIRROR DEFOGGERS ON BOTH SIDES DO NOT OPERATE

- IS FUSE C-4 (10A) NORMAL?

YES

- IS THE DOOR MIRROR DEFOGGER SW NORMAL?

YES

- REMOVE THE CONNECTORS OF THE DOOR MIRROR DEFOGGER SW
- TURN ON THE STARTER SW
- IS THERE ANY CONTINUITY BETWEEN THE HARNESS SIDE CONNECTOR 4 [B-57] AND THE GROUND?

YES

REPAIR A POOR CONNECTION OF CONNECTORS OR AN OPEN CIRCUIT BETWEEN 5 [B-57] AND 7 [H-18]

NO

REPAIR A POOR CONNECTION OF CONNECTORS OR AN OPEN CIRCUIT BETWEEN THE FUSE C-4 (10A) AND 4 [B-57]

NO

REPAIR OR REPLACE THE DOOR MIRROR DEFOGGER SW

NO

REPLACE THE FUSE

9. MIRROR DEFOGGER ON THE LEFT (OR RIGHT) SIDE DOES NOT OPERATE

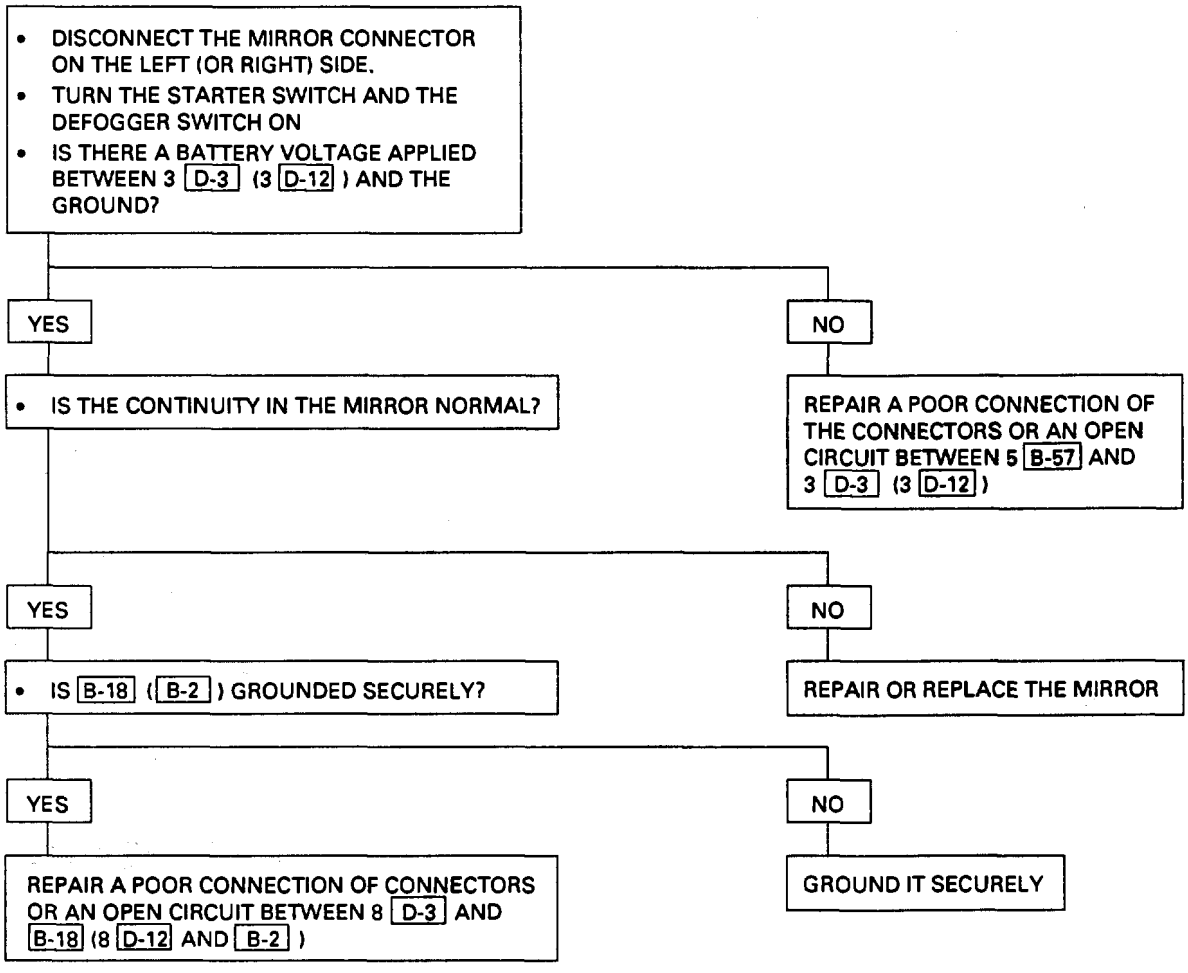

NOTE: Connectors shown in the parenthesis "( )" indicate a check point of the door mirror on the right side that does not operate.

STARTER SWITCH

Refer to "START AND CHARGING" in this section.

DOOR MIRROR SWITCH ASSEMBLY (CONTROL SWITCH, FOLDING SWITCH AND DEFOGGER SWITCH) (FIG. 8-305)

The door mirror switch is made up of the control switch that controls the vertical and horizontal movement of both mirrors, the folding switch, and the defogger switch.

The control switch consists of six switches, two of which are used to select a mirror on either the left or the right side, and the remaining four switches control vertical or horizontal mirror movement.

The folding switch contains two switches, and their contacts are changed over each time these switches are depressed. The direction of the current flow to the motor in the mirror is controlled to perform the folding and returning action of the mirror.

When depressing the defogger switch, the defogger indicator lights up to inform the driver that the mirror built-in heater is operating.

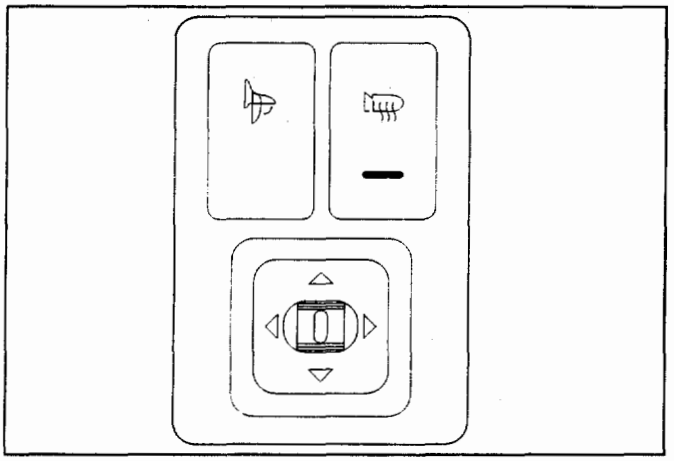

Fig. 8-305

INSPECTION

Check to see if there is any continuity between the connector terminals while operating the door mirror switch. (Fig. 8-306)

Repair or replace the switch when the result of inspection is found abnormal.

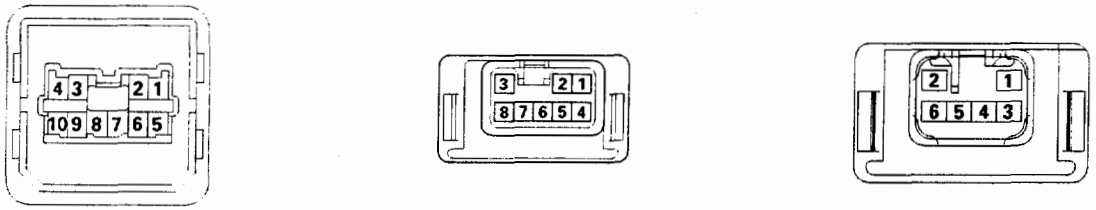

Switch	Switch position	Connector No / Terminal No.	B-55 4	B-55 9	B-55 1	B-55 8	B-55 10	B-55 7	B-55 5	B-55 2	B-55 3	B-56 8	B-56 7	B-56 6	B-56 5	B-56 4	B-56 3	B-56 2	B-57 5	B-57 4	B-57 3	B-57 6	B-57 2
Control switch	RH	△ (Up)	○	○	○			○	○														
		▽ (Down)	○	○	○			○															
		◁ (Left)	○	○	○			○	○														
		▷ (Right)	○	○	○				○														
	LH	△ (Up)	○	○	○	○	○																
		▽ (Down)	○	○	○	○																	
		◁ (Left)	○	○	○	○	○																
		▷ (Right)	○	○	○		○																
Folding switch	Folding												○	○	○	○							
	Returning											○	○	○		○							
Defogger switch	ON																		○	○	○		
	OFF																		○		○		

Fig. 8-306

Circuit inspection of the control switch (Fig.8-307)

Remove the connector B-55 of the control switch and check the voltage and continuity of the harness side connector of the vehicle.

- When there is no continuity at the terminal No. 5, 7, 8, 10, it is considered that the circuit with terminal NO.1 (B/W) is defective.
- When there is no continuity at either one of the circuit No.5, 7, 8, or 10, the motor in the mirror of the circuit or the circuit itself is defective.

B-55

Harness side

Terminal No.	Wire color	Connected to	Item to be measured	Connecting terminal	Checking conditions	Standard
1	B/W	Mirror–LH & RH	Continuity	1-ground	—	No Continuity
4	O/G	Fuse C-11 (10A)	Voltage	4-ground	Starter SW "ACC"	Approx. 12V
5	B/G	Mirror–RH: Horizontally	Continuity	5-1	—	Continuity
7	W/B	Mirror–RH: Vertically		7-1	—	
8	W/G	Mirror–LH: Vertically		8-1	—	
9	B	Ground		9-ground	—	
10	B/L	Mirror–LH: Horizontally		10-1	—	

Fig. 8-307

Circuit inspection of the folding switch (Fig. 8-308)

Remove the connector B-56 of the folding switch and check the voltage and continuity of the harness side connector of the vehicle.

- When there is no continuity at the terminal No. 4 and 7, the motor in the mirror of the circuit or the circuit itself is defective.

B-56

Harness side

Terminal No.	Wire color	Connected to	Item to be measured	Connecting terminal	Checking conditions	Standard
4	GR/G	Mirror LH & RH	Continuity	4-7	—	Continuity
5	B	Ground		5-ground		
6	O/G	Fuse C-11 (10A)	Voltage	6-ground	Starter switch "ACC"	Approx. 12V
7	GR/L	Mirror–LH & RH	Continuity	7-4	—	Continuity
8	B	Ground		8-ground		

Fig. 8-308

Circuit inspection of the defogger switch (Fig. 8-309)

Remove the connector B-57 of the defogger switch and check the voltage and continuity of the harness side connector of the vehicle.

B-57

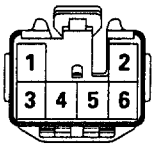

Harness side

Terminal No.	Wire color	Connected to	Item to be measured	Connecting terminal	Checking conditions	Standard
3	B	Ground	Continuity	3-ground	—	Continuity
4	L/W	Fuse C-4 (10A)	Voltage	4-ground	Starter switch "ON"	Approx. 12V
5	P/W	Mirror–LH & RH	Continuity	5-ground	—	Continuity

Fig. 8-309

REMOVAL (FIG. 8-310)

Preparation: Disconnect the battery ground cable.

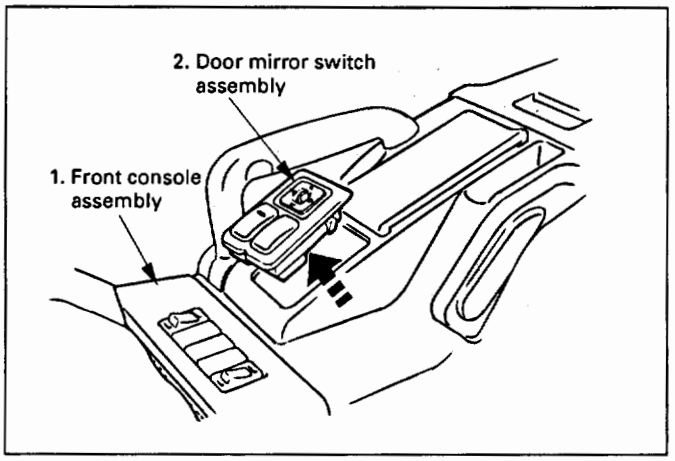

Fig. 8-310

1. **Front console assembly**
   - Remove four screws.
   - Remove the transmission shift lever knob.
   - Remove the transfer shift lever knob.
   - Disconnect the seat heater switch connectors (If so equipped).
   - Disconnect the door mirror switch connectors.
   - Disconnect the "POWER & WINTER" switch connectors. (A/T only)
2. **Door mirror switch assembly**
   - To remove the switch, pushing the switch locks from the back side of the front console.

INSTALLATION

To install, follow the removal steps in the reverse order, noting the following point.

1. Depress the switch with your fingers until it locks securely.

DOOR MIRROR (FIG. 8-311)

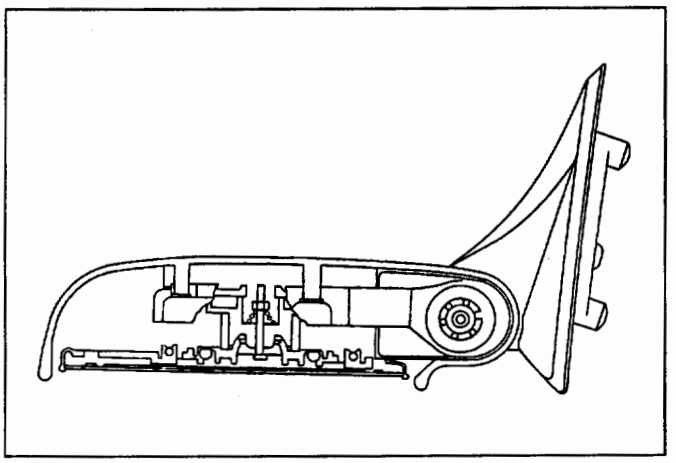

Fig. 8-311

Mirrors contain two driving motors for the horizontal and vertical movement of the mirror and one motor for folding the mirror.
The movement of the mirror is controlled by the direction of current running through these motors.
The housing portion of the mirror is provided with the auto-stop mechanism which is interlocked with the motor for folding the mirror. When the mirror moves to the stop position (with the mirror folded or returned to its original position), the current to the motor is shut off.
When the mirror cannot operate due to some obstacle and the motor stops its rotation, the resistor prevents current overflow.

INSPECTION

Operating test

Apply battery voltage to the harness side connector [B-55] and [B-56] of the door mirror switch and check its function. (Fig.8-312)

Mirror \ Connector No. / Terminal No.	B-55					Operating direction
	10	5	1	8	7	
Right		⊕	⊖			Left
		⊖	⊕			Right
			⊖		⊕	Up
			⊕		⊖	Down
Left	⊕		⊖			Left
	⊖		⊕			Right
			⊖	⊕		Up
			⊕	⊖		Down

B-55 B-56

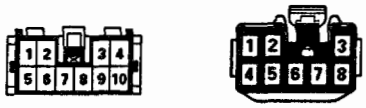

Harness side

Operation \ Connector No. / Terminal No.	B-56	
	7	4
Folding	⊕	⊖
Returning	⊖	⊕

Fig. 8-312

Operating test of the motor

Apply the battery voltage to the terminals between the door mirror connectors D-3 and D-12, and check its function. (Fig. 8-313)

D-3 D-12

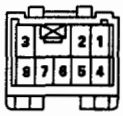

Unit side

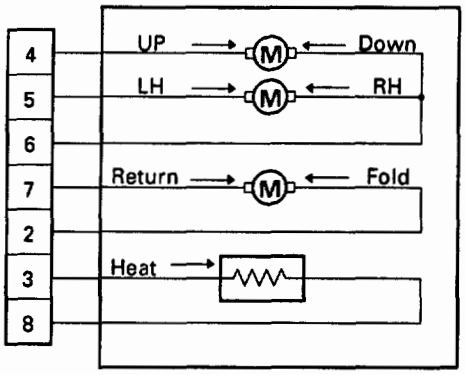

Operation \ Connector No. / Terminal No.	D-3		D-12				
	2	3	4	5	6	7	8
Up			⊕		⊖		
Down			⊖		⊕		
Left				⊕	⊖		
Right				⊖	⊕		
Folding	⊕					⊖	
Returning	⊖					⊕	
Heating		⊕					⊖

Fig. 8-313

REMOVAL AND INSTALLATION

Refer to the door mirror in Section 10 "BODY."

MEMO

ANTI-THEFT SYSTEM

GENERAL DESCRIPTION

The circuit consists of the starter switch, anti-theft controller, anti-theft horn, front door and tailgate key switch (detect and tamper switch), door lock (& power window) switch, door lock actuator for each door, engine hood switch, clutch start switch (M/T), ANTI-THEFT indicator light and mode switch (A/T). The system operates as follows: After locking the starter switch and removing the starter key (this sets the alarm), if the door is unlocked in any way other than with the proper key, the headlights start flashing, the horn sounds, and the starter circuit is disabled. (However, the engine hood and all the doors must be locked and closed.)

Once the system has been placed in the warning or alarm condition, it can be released only when the starter switch is shifted from "OFF" to "ACC" by the starter key, or when the lock of the front door or the tailgate is released (to activate the detect switch) by the starter key.

OPERATION OF ANTI-THEFT SYSTEM

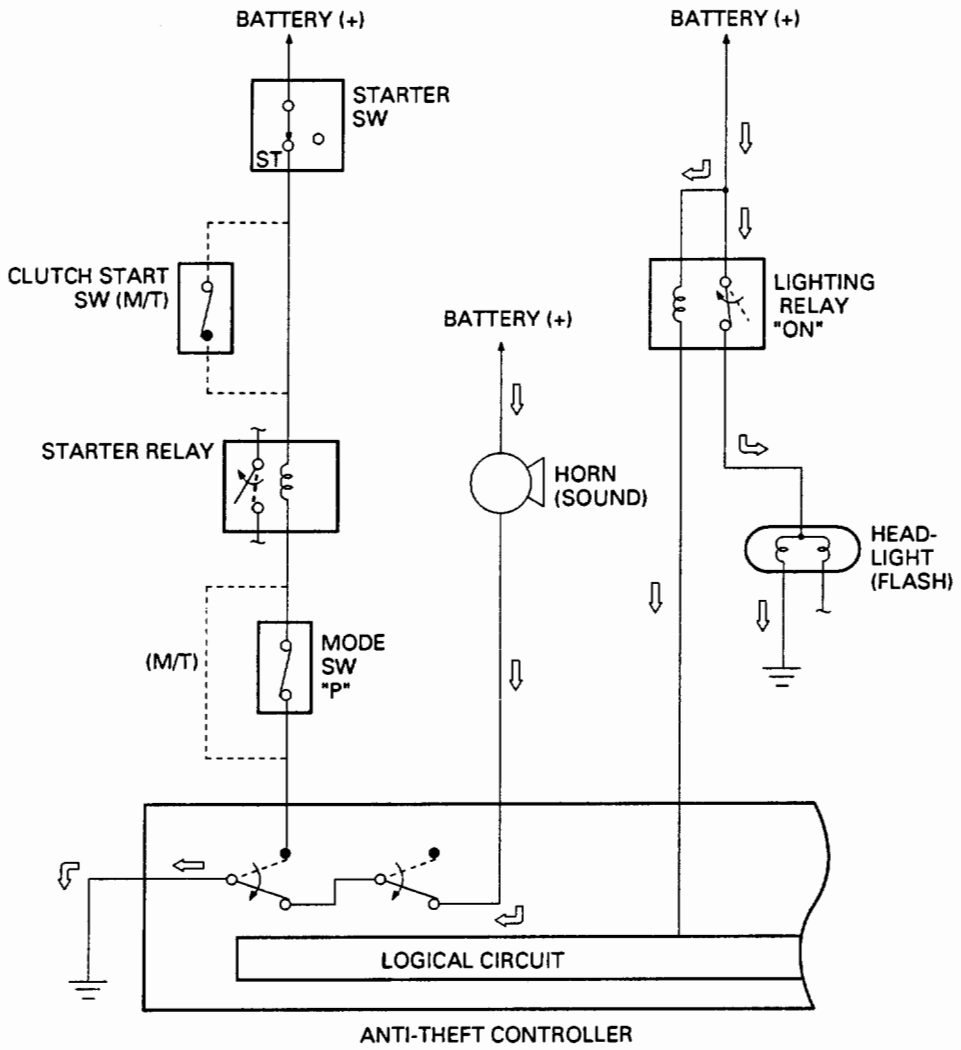

NOTE: Arrow marks " ⇨ " indicate the direction of current

Fig. 8-314

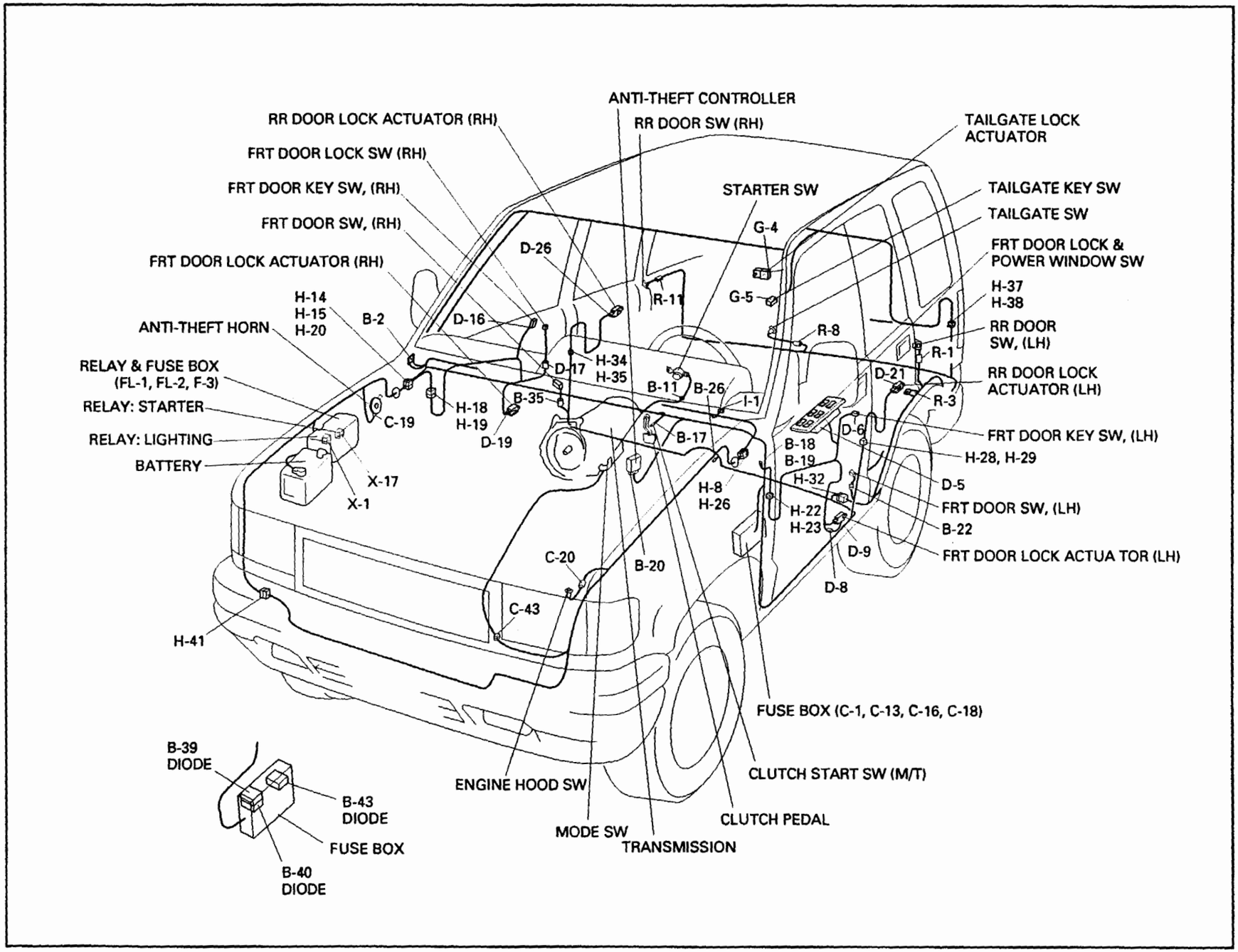
ANTI-THEFT CONTROLLER
RR DOOR LOCK ACTUATOR (RH)
RR DOOR SW (RH)
TAILGATE LOCK ACTUATOR
FRT DOOR LOCK SW (RH)
FRT DOOR KEY SW, (RH)
STARTER SW
TAILGATE KEY SW
TAILGATE SW
FRT DOOR SW, (RH)
G-4
FRT DOOR LOCK & POWER WINDOW SW
FRT DOOR LOCK ACTUATOR (RH)
D-26
H-37
H-38
H-14
H-15
H-20
R-11
G-5
B-2
D-16
R-8
RR DOOR SW, (LH)
ANTI-THEFT HORN
R-1
H-34
H-35
D-17
D-21
RR DOOR LOCK ACTUATOR (LH)
RELAY & FUSE BOX (FL-1, FL-2, F-3)
B-11
B-26
I-1
R-3
B-35
H-18
H-19
RELAY: STARTER
C-19
D-6
FRT DOOR KEY SW, (LH)
RELAY: LIGHTING
D-19
B-17
B-18
B-19
H-28, H-29
BATTERY
H-32
D-5
X-17
H-8
H-26
FRT DOOR SW, (LH)
X-1
H-22
H-23
B-22
D-9
FRT DOOR LOCK ACTUA TOR (LH)
C-20
B-20
D-8
C-43
H-41
FUSE BOX (C-1, C-13, C-16, C-18)
B-39 DIODE
CLUTCH START SW (M/T)
ENGINE HOOD SW
B-43 DIODE
CLUTCH PEDAL
MODE SW
FUSE BOX
TRANSMISSION
B-40 DIODE

Fig. 8-315

CIRCUIT DIAGRAM

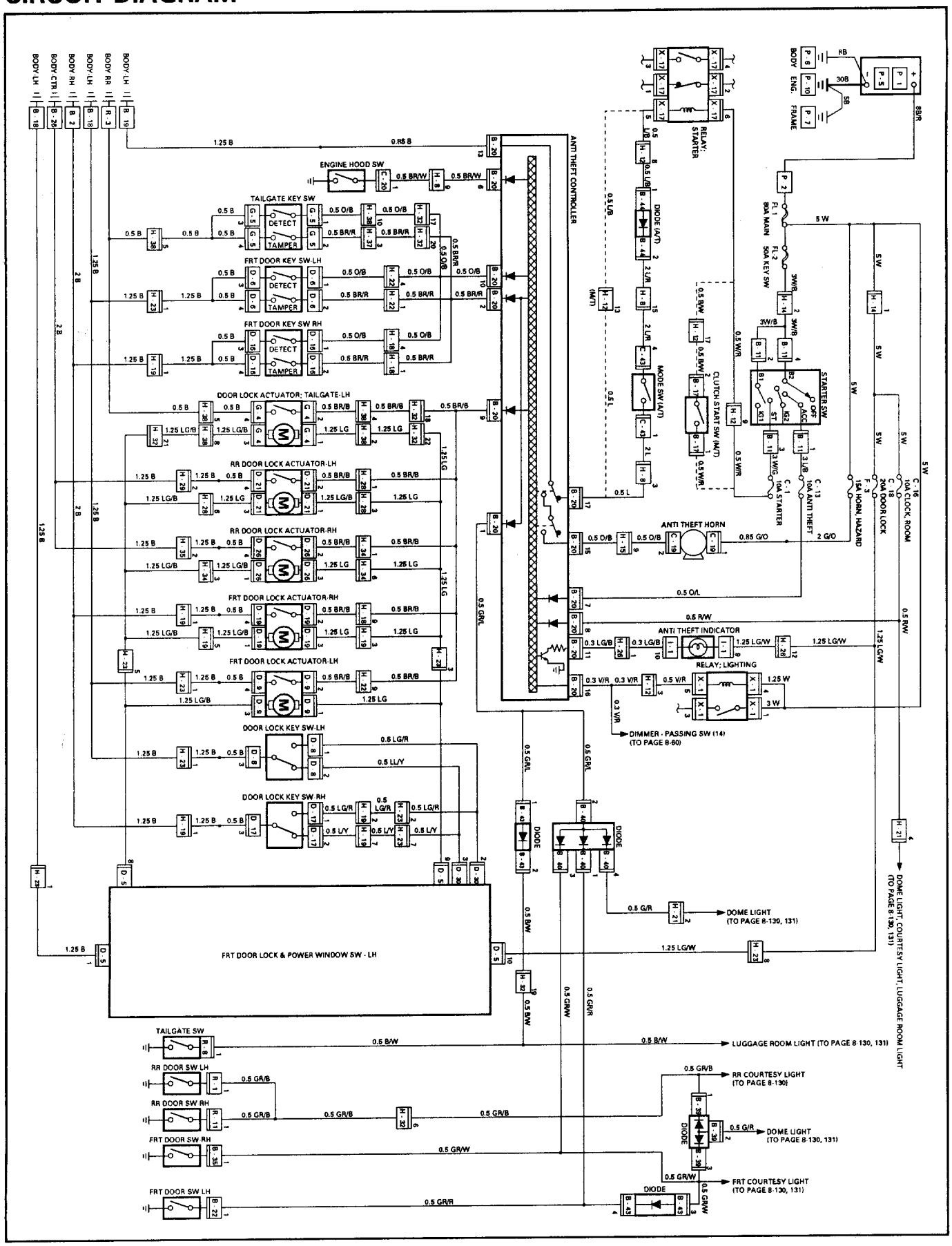

Fig. 8-316

CONNECTOR LIST

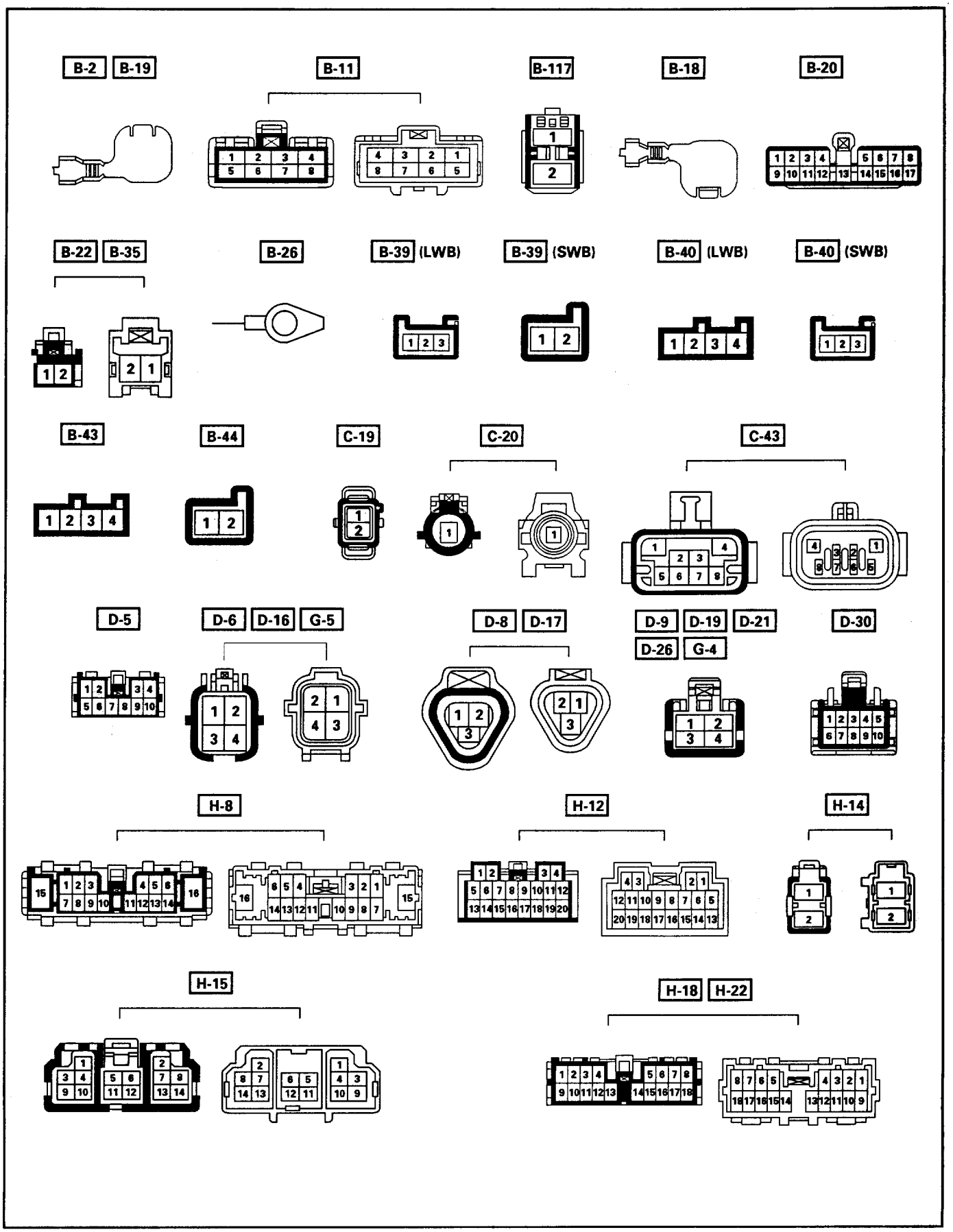

Fig. 8-317

CONNECTOR LIST

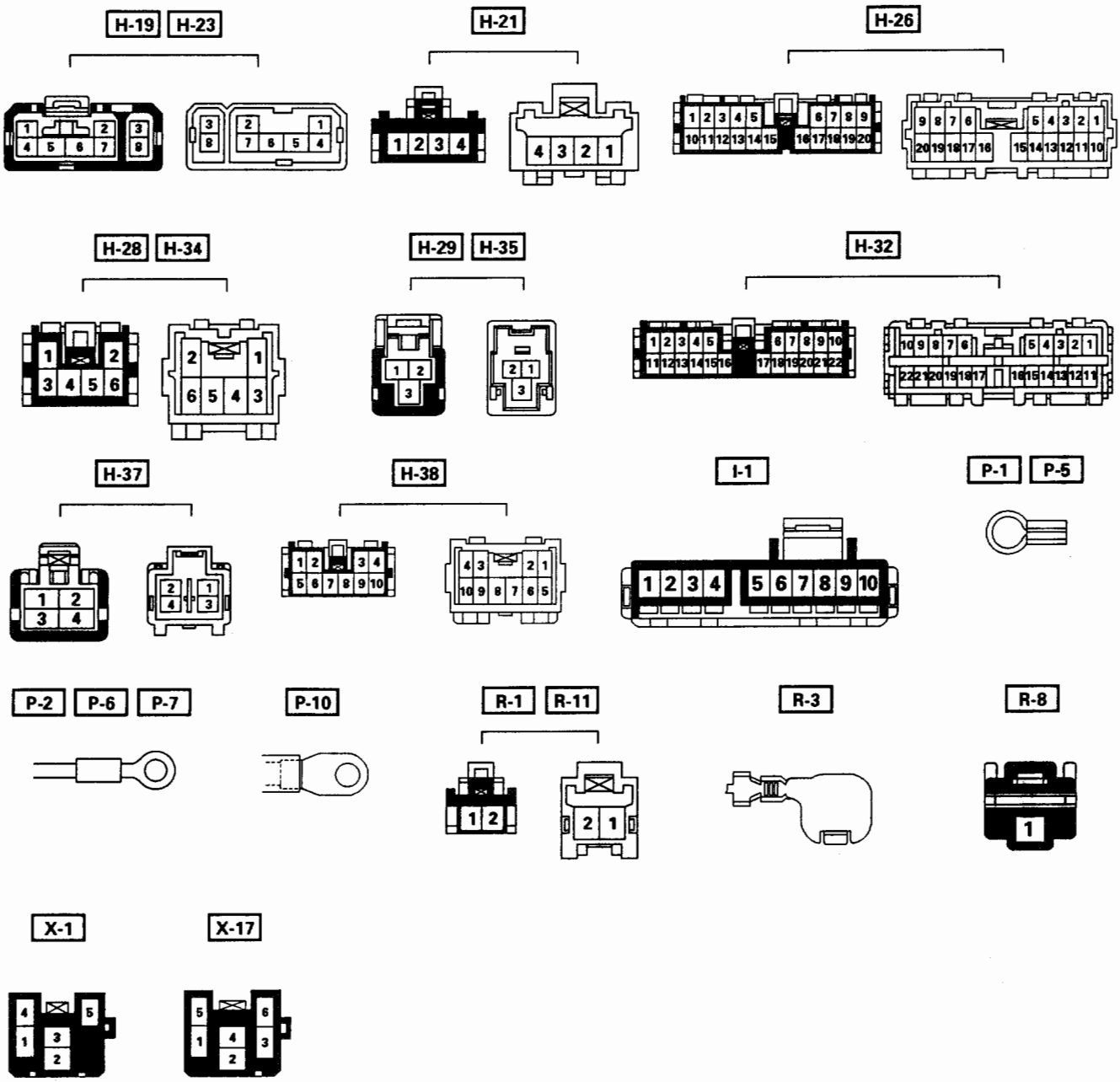

Fig. 8-318

DIAGNOSIS

DIAGNOSIS PROCEDURE

1. Check to see if the battery voltage is normal.
2. Check to see if the fuse is normal.
3. Replace the anti-theft controller with one reserved for test. If a trouble recurs even after replacing the controller, find out the cause of the trouble by referring to "System check procedure" and the following list.

Item	Malfunction	Possible cause	Detecting method	Remarks
A	ANTI-THEFT indicator light does not flash	Defective contact of door switch, or open circuit in door switch wiring.	With door open, dome light and courtesy light do not come on.	Burnt out indicator light bulb possible.
		Short circuit in the detect switch.	Check controller connector.	Refer to "Connector check procedure" in this system.
B	Indicator light does not change to fully ON condition, or does not come on at all	Engine hood, doors and tailgate are not fully closed and locked.	Check to see if doors are closed and locked.	
		Defective door switch, or short circuit in switch wiring.	Dome light and courtesy light remain lit on after closing doors.	
		Defective tamper switch, or short circuit in wiring.	Check controller connector.	Refer to "Connector check procedure" in this system.
		Defective lock switch, or short circuit in wiring.	Check controller connector.	Refer to "Connector check procedure" in this system.
		Defective engine hood switch, or short circuit in wiring.	Check controller connector.	Refer to "Connector check procedure" in this system.
		Defective tailgate switch, or short circuit in wiring.	Luggage room light remains lit after closing tailgate.	
C	ANTI-THEFT indicator light does not turn off.(Steadily on)	Defective controller.		
D	When door is opened by pulling up locking knob, alarm does not operate	Poor contact of lock switch, or open circuit in wiring.	Check alarm operation (See No. 46 of "System check procedure," possible cause is a poor contact of lock switch or a open circuit in wiring.	
		Broken wire in wiring to headlight and horn, or a blown fuse.	Check to see if headlights go out. Check controller connector.	Refer to "Connector check procedure" in this system.
E	Alarm does not stop.	Defective contact of detect switch, or damaged switch wiring.	Check controller connector.	Refer to "Connector check procedure" in this system.
F	Even when door unlocked with key, alarm operates.	Defective contact of detect switch, or damaged switch wiring.	Check controller connector.	Refer to "Connector check procedure" in this system.
		Door detect switch is assembled to wrong door.	When key is turned to lock position, alarm stops.	

Item	Malfunction	Possible cause	Detecting method	Remarks
G	Alarm does not operate even with tailgate open	Defective contact of tailgate switch, or defective wiring.	When luggage room light switch is turned on with tailgate open, luggage room light does not come on.	
H	Even when tailgate is opened with key, alarm does not stop.	Defective contact of tailgate detect switch, or damaged wiring.	Check controller connector.	Refer to "Connector check procedure" in this system.
I	Even when engine hood is opened with remote release, alarm does not operate	Damaged engine hood switch or wiring.		
J	Even when starter switch is turned, alarm does not stop	Defective contact of starter switch.	With starter switch turned to "ACC" position, audio, cigarette lighter and door mirrors (on "ACC" circuit) do not operate.	
K	Indicator light continues flashing	Damaged door switch, or a short circuit in wiring.	After closing door, dome light and courtesy light remain on.	
		Damaged tamper switch, or a short circuit in wiring.	Check controller connector.	Refer to "Connector check procedure" in this system.

Step	Operation	Item to be checked	Item of malfunction	Remarks
34	Close right rear door.			
35	Insert key into key cylinder of right front door and turn it in lock direction.	Check to see if indicator light stays on steadily.	B	
36	Wait about 10 seconds.	Check to see if indicator light goes off after about 10 seconds.	C	Activate alarm device.
37	Unlock right front door with locking knob.	Check to see if alarm operates.	D	Only right front door is unlocked.
38	Insert key into key cylinder of right front door and turn it in unlock direction.	Check to see if alarm stops	E	With key at unlock position, check to see if alarm stops. (With all doors unlocked.)
39	Open right front door.	Check to see if indicator light flashes.	A	
		Check to see if dome light and courtesy light come on.		
40	Close right front door.			
41	Lock right front door with key.	Check to see if indicator light stays on steadily.	B	
42	Wait about 10 seconds.	Check to see if indicator light goes off after about 10 seconds.	C	Activate alarm device.
43	Unlock right front door with key.	Check to see if alarm does not operate.	F	
44	Lock right front door with key.	Check to see if indicator light stays on steadily.	B	
45	Wait about 10 seconds.	Check to see if indicator light goes off after about 10 seconds.	C	Activate alarm device.
46	Open engine hood with engine hood release handle.	Check to see if alarm operates.	I	
47	Insert key into starter switch and turn it to "ACC" position.	Check to see if alarm stops.	J	

NOTE: When the connector of the anti-theft controller is disconnected, the starter is inoperative.
In the checking of short wheel base model, Step Nos. 16 through 21 and Step Nos. 31 through 36 are omitted.

Connector Checking Procedure

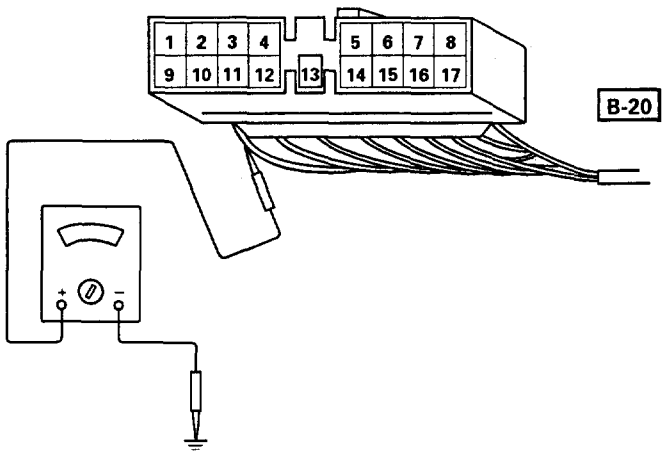

Terminal No.	Connection	Check	Operation	Circuit condition	Remarks
1	Door switch (FRT-LH & RH, RR-LH & RH, Tailgate)	Continuity	Open door	Continuity	Ground
			Close door	No Continuity	
2	Tamper switch	Continuity	—	No Continuity	If continuity to ground - no good
3	—	—	—	—	
4	—	—	—	—	
5	—	—	—	—	
6	Engine hood switch	Continuity	Open engine hood	Continuity	Ground
			Close engine hood	No Continuity	
7	Starter switch "ACC" position	Voltage	Starter switch "OFF" position	0V	
			Starter switch "ACC" or "ON" position	12V	Satisfactory if 10V and over
8	Battery (+)	Voltage	—	12V	Satisfactory if 10V and over
9	Door lock switch (FRT-LH & RH, RR-LH & RH, Tailgate)	Continuity	Unlock with locking knob	Continuity	Ground
			Lock with locking knob	No Continuity	
10	Detect switch (FRT-LH & RH, Tailgate)	Continuity	Unlock with key	Continuity	Ground
			Lock with key	No Continuity	

Fig. 8-319

SYSTEM CHECK PROCEDURE

Step	Operation	Item to be checked	Item of malfunction	Remarks
1	Turn starter key to "ON" position.	Check to see if engine hood, tail-gate and doors are closed and locked.		
2	Open windows fully.			
3	Pull out starter key after turning it back to "OFF" position.	Check to see if indicator light remains lit off.	K	
4	Unlock left front door with locking knob.			
5	Open left front door. (And get out of the vehicle.)	Check to see if indicator light flashes.	A	
		Check to see if dome light and courtesy light illuminate.		
6	Close left front door.			Be sure to lock door with locking knob.
7	Lock left front door.	Check to see if indicator light changes from flashing to steadily on.	B	
8	Wait about 10 seconds.	Check to see if indicator light turns off in about 10 seconds.	C	Activate alarm device.
9	Unlock left front door with locking knob.	Check to see if alarm operates (with headlight flashing, and horn blaring intermittently).	D	All doors are unlock-ed.
10	Insert key into key cylinder of left front door and turn it in unlock direction.	Check to see if alarm stops.	E	With key set at unlock position, check to see if alarm stops.
11	Lock left front door.	Check to see if indicator light turns on.	B	All doors are locked.
12	Wait for about 10 seconds.	Check to see if indicator light goes off after about 10 seconds.	C	Activate alarm device.
13	Unlock left front door with key.	Check to see if alarm does not operate.	F	
14	Lock left front door with key.	Check to see if indicator light turns on.	B	
15	Wait for about 10 seconds.	Check to see if indicator light goes off after about 10 seconds.	C	Activate alarm device.
16	Unlock left rear door with locking knob.	Check to see if alarm starts.	D	Only left rear door is unlocked
17	Insert key into key cylinder of left front door and turn it to unlock direction.	Check to see if alarm stops.	E	With key set at unlock position, check to see if alarm stops. (All doors are unlocked.)

Step	Operation	Item to be checked	Item of malfunction	Remarks
18	Open left rear door.	Check to see if indicator light flashes.	A	
		Check to see if dome light and courtesy light come on.		
19	With one person in vehicle, close left rear door.			
20	Lock left front door with locking knob.	Check to see if indicator light is steadily on.	B	All doors are locked.
21	Wait about 10 seconds.	Check to see if indicator light turns off in about 10 seconds.	C	Activate alarm device.
22	Unlock tailgate from inside with locking knob.	Check to see if alarm operates.	D	Only tailgate is unlocked
23	Open tailgate, insert key into key cylinder of tailgate and turn it in lock direction.	Check to see if alarm stops.	H	With key set at unlock position, check to see if alarm stops.
24	Leave tailgate open.	Check to see if indicator light flashes.	A	
		Check to see if luggage room light on.	G	
25	Close tailgate			
26	Insert key into tailgate key cylinder and turn it in lock direction.	Check to see if indicator light changes over from flashing into lighting condition.	B	
27	Wait about 10 seconds.	Check to see if indicator light goes off after about 10 seconds.	C	Activate alarm device.
28	Unlock tailgate with key.	Check to see if alarm does not operate.	F	
29	Lock tailgate with key.	Check to see if indicator light come on.	B	
30	Wait about 10 seconds.	Check to see if indicator light goes off after about 10 seconds.	C	Activate alarm device.
31	Unlock right rear door with locking knob.	Check to see if alarm operates.	D	Only right rear door is unlocked.
32	Insert key into key cylinder of right front door and turn it in unlock direction.	Check to see if alarm stops	E	With key at unlock position, check to see if alarm stops. (With all doors unlocked.)
33	Open right rear door.	Check to see if indicator light flashes.	A	
		Check to see if dome light and courtesy light come on.		

Terminal No.	Connection	Check	Operation	Circuit condition	Remarks
11	Indicator light	Voltage	—	12V	
		Continuity	—	Continuity	
12	—	—	—	—	
13	Ground	Continuity	—	Continuity	Ground
14	—	—	—	—	
15	Horn	Voltage	—	12V	
		Continuity	—	Continuity	
16	Combination switch (Dimmer)	Voltage	—	12V	
		Continuity	—	Continuity	
17	Starter switch	Voltage	—	No Continuity	

ENGINE HOOD SWITCH

INSPECTION

Check the continuity between the switch terminal and the body. (Fig. 8-320)

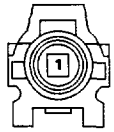

Terminal No. / Switch operation	1	Switch body
Push		
Release	○——	——○

Fig. 8-320

REMOVAL (FIG. 8-321)

Preparation: Disconnect the battery ground cable.

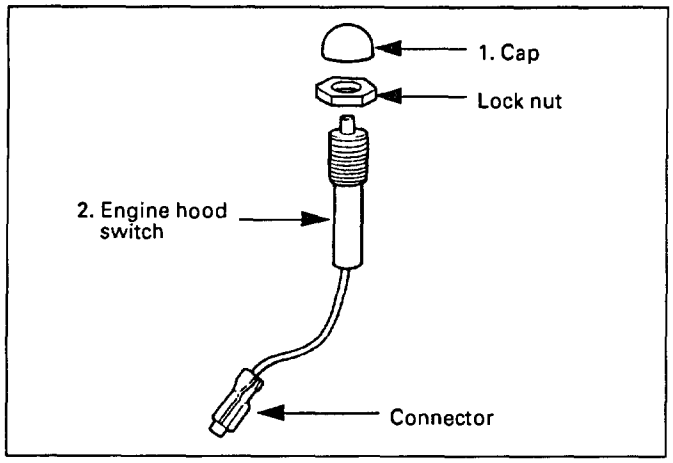

Fig. 8-321

1. **Cap**
2. **Engine hood switch**
   - Remove the lock nut
   - Disconnect the connector

INSTALLATION

To install, follow the removal steps in the reverse order.

KEY SWITCH (FRONT DOOR- LH AND RH, TAILGATE)

INSPECTION (DETECT SWITCH)

Check the continuity between the connector terminals. (Fig. 8-322)

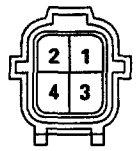

Terminal No. / Key operation	1	3
Lock	○——	——○
Unlock		

Fig. 8-322

INSPECTION (TAMPER SWITCH)

Check the continuity between the connector terminals. (Fig. 8-323)

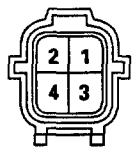

Terminal No. / Switch operation	2	4
Push		
Release	○——	——○

Fig. 8-323

REMOVAL AND INSTALLATION

Refer to Section 10 "BODY" for outside handle and door lock cylinder removal and installation steps

DOOR LOCK ACTUATOR (FRT DOOR - LH & RH, RR DOOR - LH & RH, TAILGATE)

INSPECTION

Check the continuity between the terminals while moving by hand the link portion of the actuator to the lock and unlock sides. (Fig. 8-324)

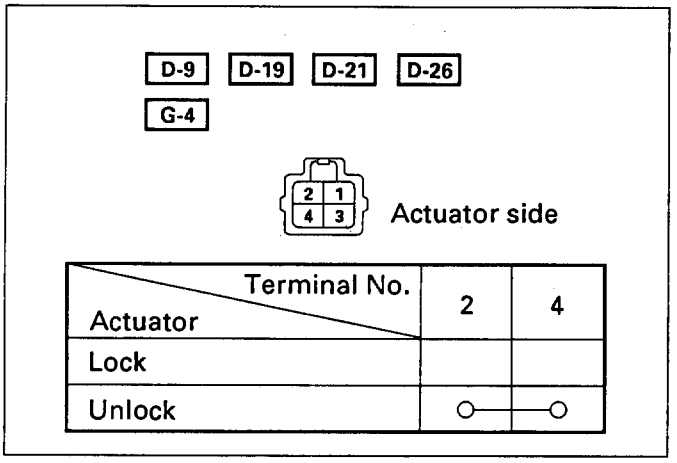

Actuator \ Terminal No.	2	4
Lock		
Unlock	○	○

Fig. 8-324

REMOVAL AND INSTALLATION

Refer to "POWER DOOR LOCK" in this section for door lock controller removal and installation steps.

FRONT DOOR LOCK SWITCH - LEFT AND RIGHT

DOOR LOCK CONTROLLER

Refer to "POWER DOOR LOCK" in this section.

DOOR SWITCH

TAILGATE SWITCH

Refer to "DOME LIGHT, LUGGAGE ROOM LIGHT, COURTESY LIGHT, MAP LIGHT, SEAT BELT SWITCH AND WARNING BUZZER" in this section.

ANTI-THEFT HORN

INSPECTION

Check the continuity between the connector terminals. (Fig. 8-325)

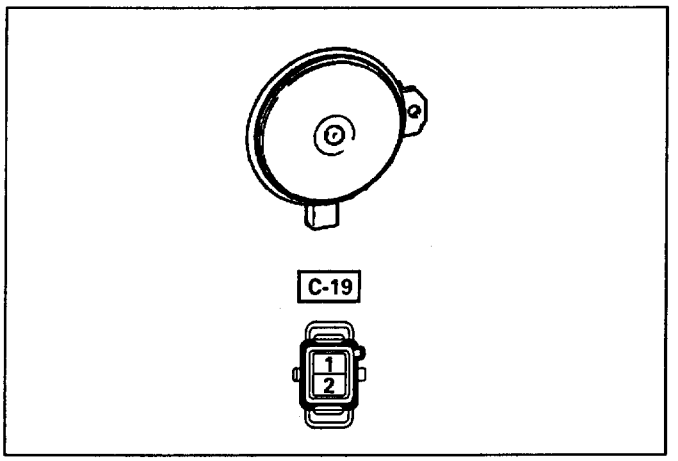

Fig. 8-325

REMOVAL (FIG. 8-326)

Preparation: Disconnect the battery ground cable.

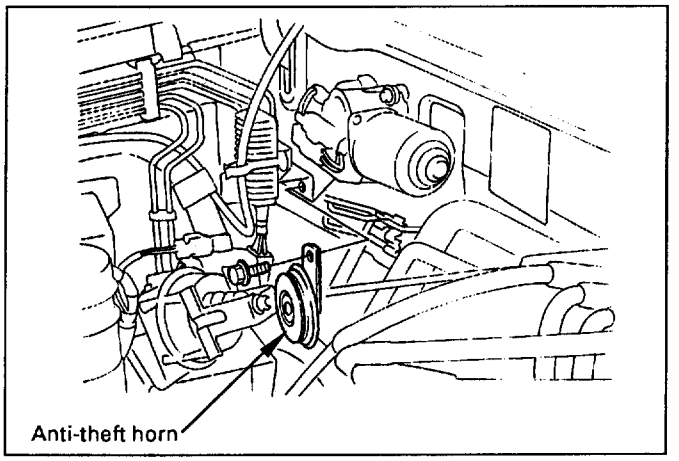

Fig. 8-326

1. **Anti-theft horn**
   - Disconnect the connector.
   - Remove the fixing bolt.

INSTALLATION

To install, follow the removal steps in the reverse order.

ANTI-THEFT INDICATOR

INSPECTION

With the battery (+) terminal connected to the indicator terminal 9 [I-1] and the (–) terminal to the indicator terminal 10 [I-1], check to see if the indicator lights up. (Fig. 8-327)

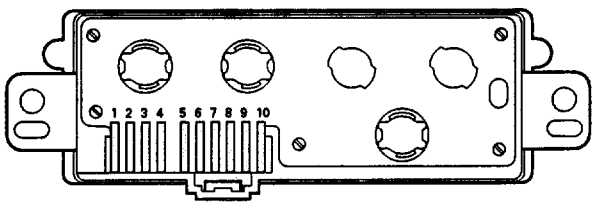

Terminal No.	9	10
Continuity		

Fig. 8-327

REMOVAL (FIG. 8-328)

Preparation: Disconnect the battery ground cable.

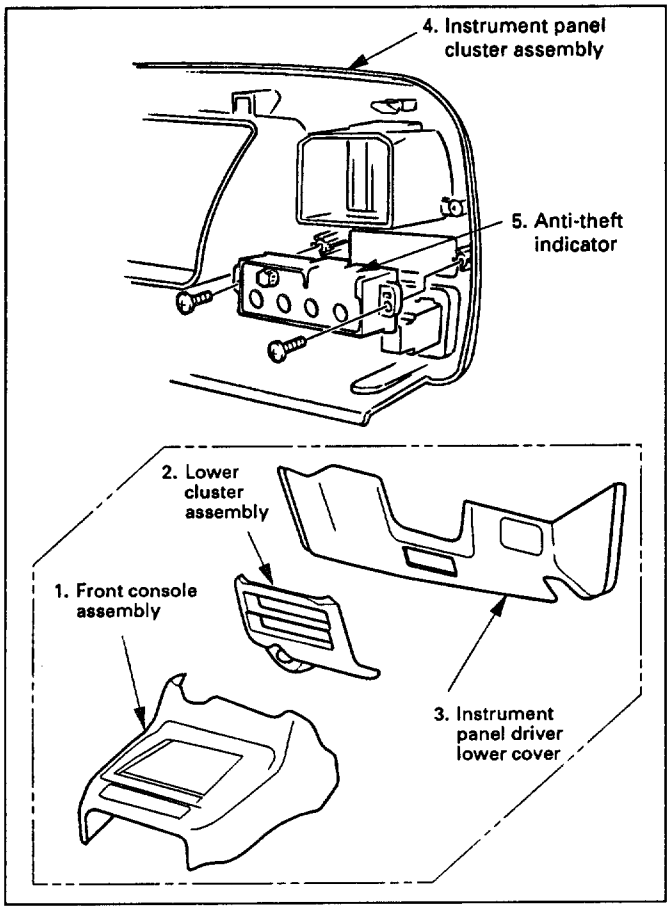

Fig. 8-328

1. **Front console assembly**
2. **Lower cluster assembly**
3. **Instrument panel driver lower cover**
4. **Instrument panel cluster assembly**
   - Refer to FOG LIGHT SWITCH removal steps in this section.
5. **Anti-theft indicator**
   - Remove 2 screws.

INSTALLATION

To install, follow the removal steps in the reverse order.

ANTI-THEFT CONTROLLER

REMOVAL (FIG. 8-329)

Preparation: Disconnect the battery ground cable.

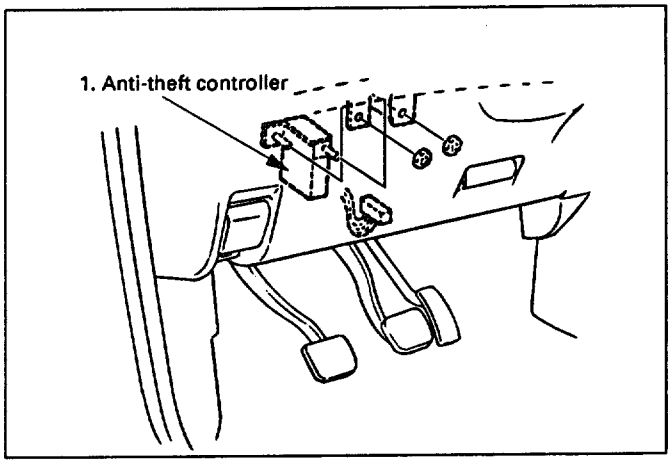

Fig. 8-329

1. **Anti-theft controller**
   - Disconnect the connector.
   - Remove 2 nuts.

INSTALLATION

To install, follow the removal steps in the reverse order.

STARTER SWITCH

CLUTCH START SWITCH

MODE SWITCH

Refer to "START AND CHARGING" in this section.

LIGHTING RELAY

INSPECTION

Check the continuity between the relay terminals (Fig. 8-330)

① – ③ · · · · · · · · No continuity

(When battery voltage is applied between ④ – ⑤)

① – ③ · · · · · · · · Continuity

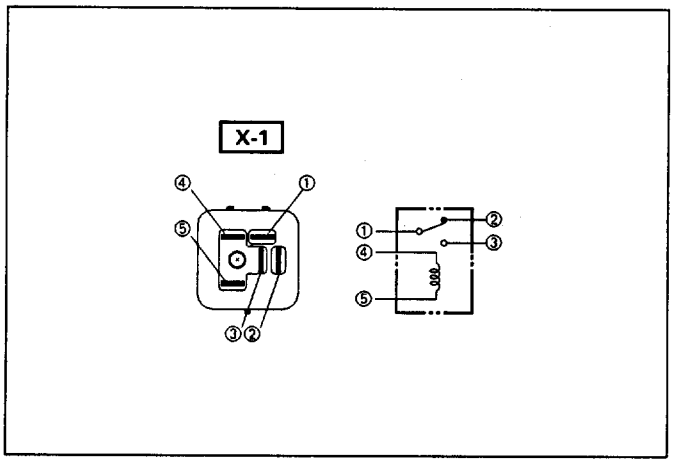

Fig. 8-330

STARTER RELAY

INSPECTION

Check to see if there is any continuity between the relay terminals (Fig. 8-331)
Replace the relay with a correct one when the result of inspection is found abnormal.

① – ②. . . . . Continuity
③ – ④ . . . . . No continuity

(When battery voltage is applied between ⑤ – ⑥)

① – ② . . . . . Continuity
③ – ④ . . . . . No continuity

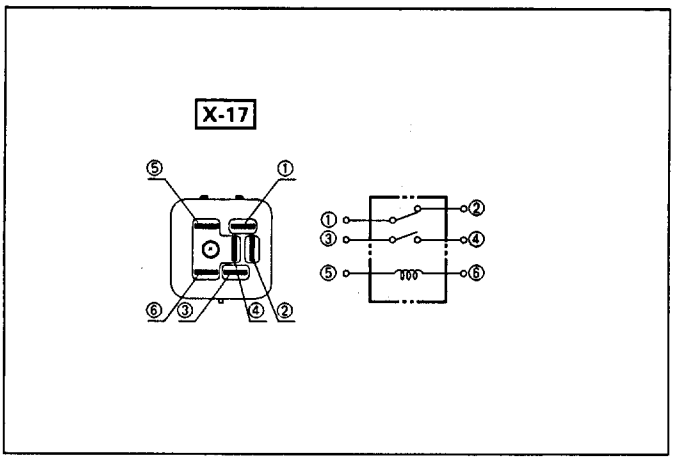

Fig. 8-331

NOTE:
For relay removal, refer to "Connector Handling" under "NOTES FOR WORKING ON ELECTRICAL ITEMS" in this section.

DIODE

INSPECTION

There should be continuity in either A or B when a circuit tester is connected with diode terminal. (Fig. 8-332, 8-333, 8-334)

Replace the diode when the result of inspection is found abnormal.

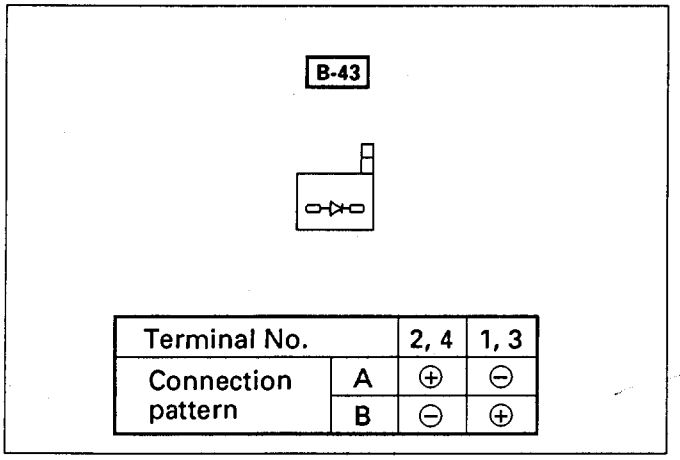

Terminal No.		2, 4	1, 3
Connection pattern	A	⊕	⊖
	B	⊖	⊕

Fig. 8-332

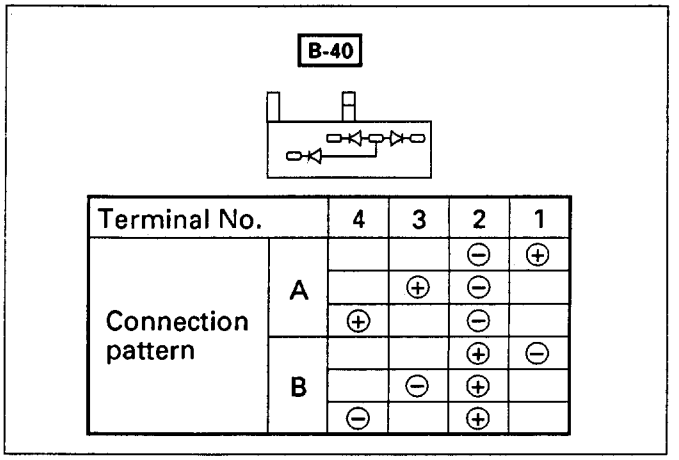

Terminal No.		4	3	2	1
Connection pattern	A			⊖	⊕
			⊕	⊖	
		⊕		⊖	
	B			⊕	⊖
			⊖	⊕	
		⊖		⊕	

Fig. 8-333

B-39

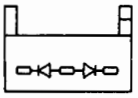

Terminal No.		3	2	1
Connection pattern	A	⊖	⊕	
			⊕	⊖
	B	⊕	⊖	
			⊖	⊕

Fig. 8-334

REMOVAL (FIG. 8-335)

Preparation: Disconnect the battery ground cable.

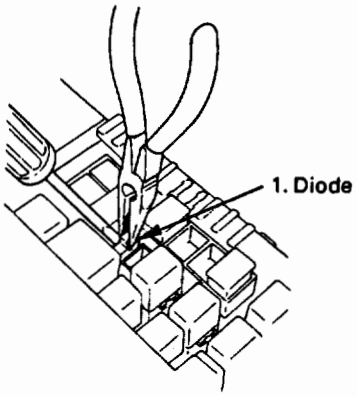

Fig. 8-335

1. **Diode**
   - Remove the diode by inserting a thin screwdriver between the lock rib side of the diode and the connector housing.

MEMO

METER AND WARNING/INDICATOR LIGHT

GENERAL DESCRIPTION

The circuit consists of the starter switch, meter assembly, vehicle speed sensor, clutch switch, transmission switch, lighting switch, turn signal switch, thermo unit, oil pressure unit, Engine Control Module, fuel tank unit, 4WD SW, oil pressure switch, parking brake switch, brake fluid switch, seat belt switch and illumination controller.

The meter ASM contains the speedometer, tachometer, voltmeter, engine coolant temperature gauge, oil pressure gauge, fuel gauge and warning/indicator lights.

The meter warning/indicator lights and their bulb sockets are a unit, they are installed from the back of the speedometer assembly.

PARTS LOCATION

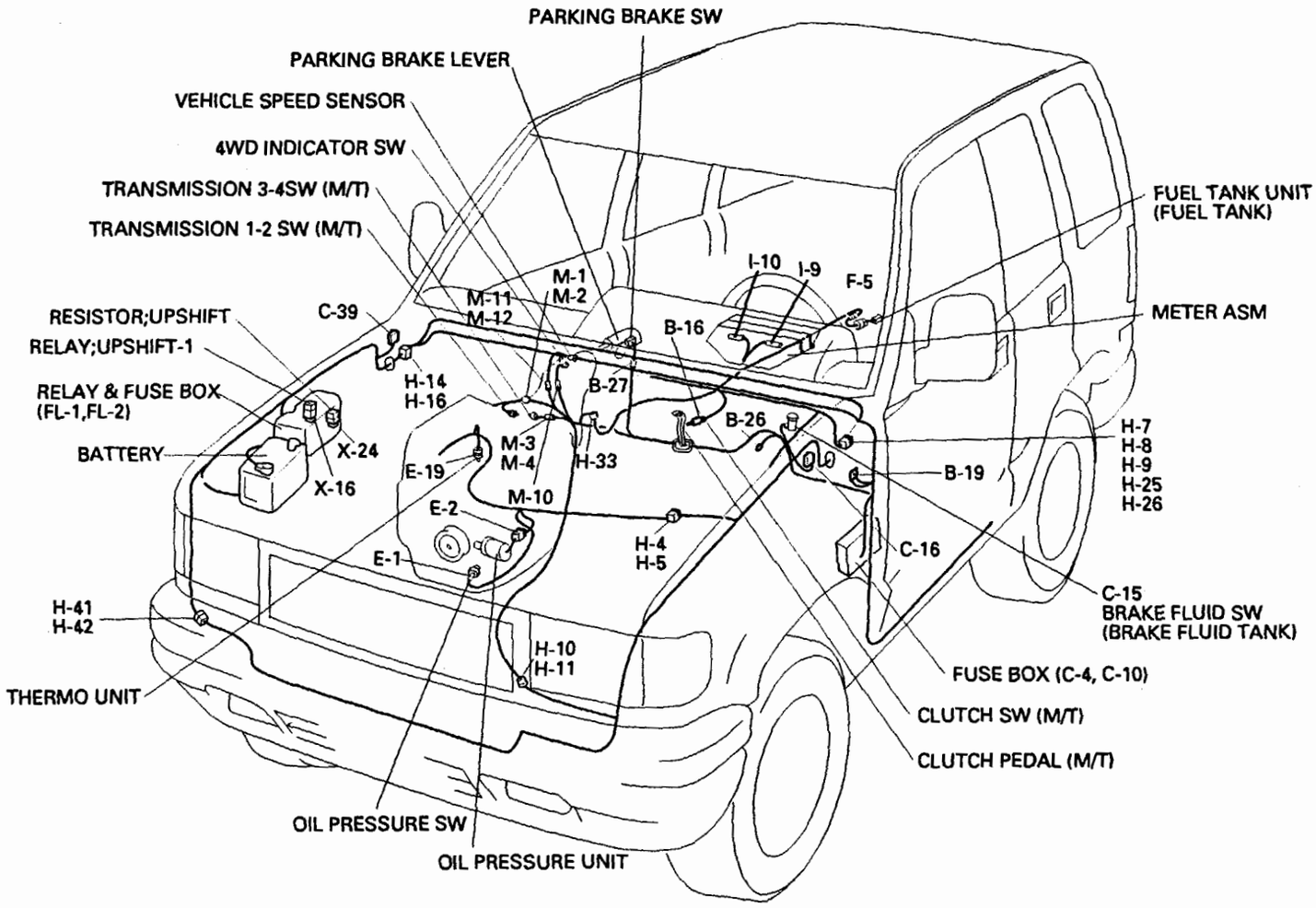

Fig. 8-336

CIRCUIT DIAGRAM

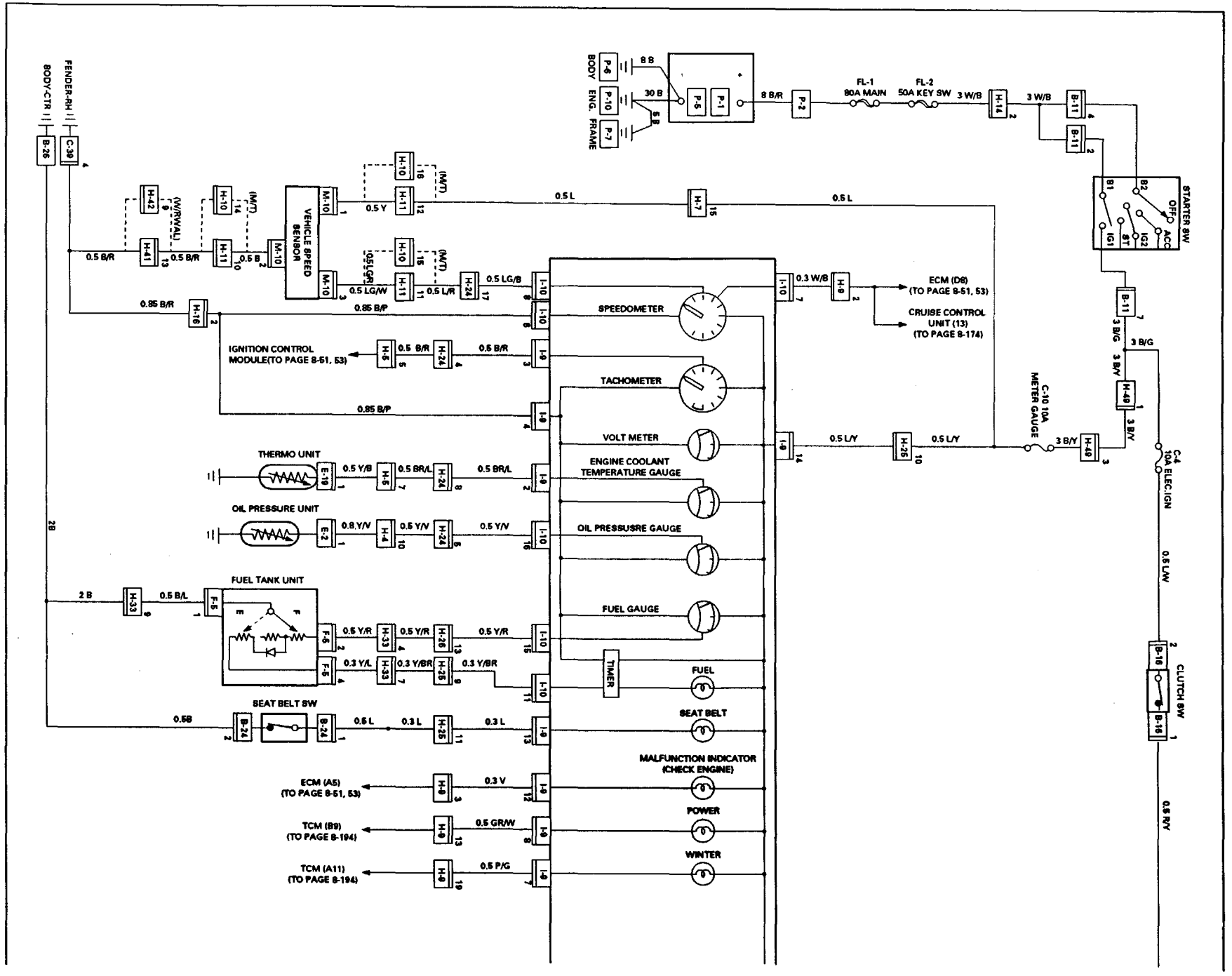

Fig. 8-337

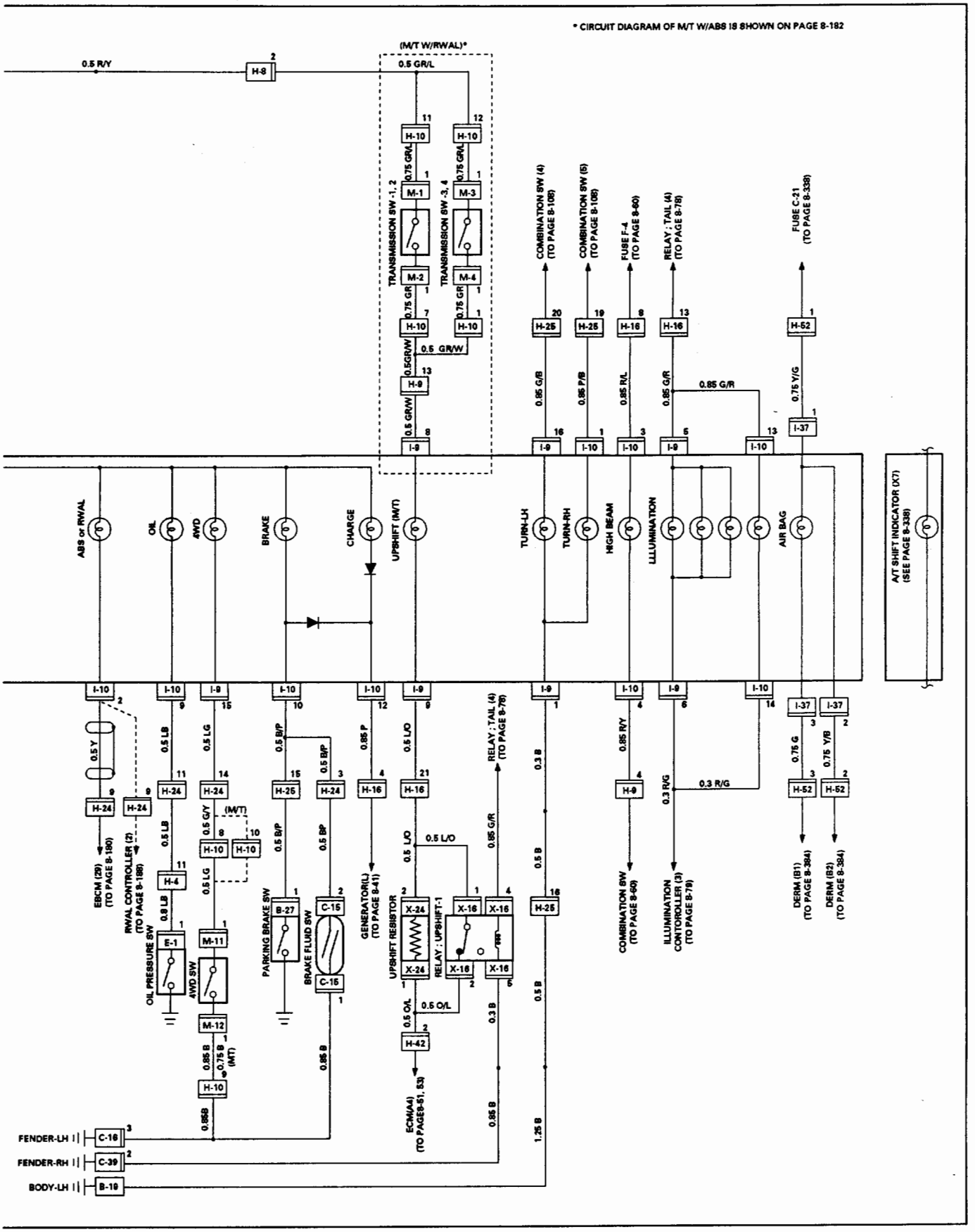
* CIRCUIT DIAGRAM OF M/T W/ABS IS SHOWN ON PAGE 8-182
(M/T W/RWAL)*
0.5 R/Y
H-8
0.5 GR/L
TRANSMISSION SW -1, 2
TRANSMISSION SW -3, 4
COMBINATION SW (4) (TO PAGE 8-108)
COMBINATION SW (5) (TO PAGE 8-108)
FUSE F-4 (TO PAGE 8-60)
RELAY ; TAIL (4) (TO PAGE 8-78)
FUSE C-21 (TO PAGE 8-338)
0.5 GR/W
0.85 G/R
0.75 Y/G
ABS or RWAL
OIL
4WD
BRAKE
CHARGE
UPSHIFT (M/T)
TURN-LH
TURN-RH
HIGH BEAM
ILLUMINATION
AIR BAG
A/T SHIFT INDICATOR (X7) (SEE PAGE 8-338)
EBCM (29) (TO PAGE 8-190)
RWAL CONTROLLER (2) (TO PAGE 8-188)
OIL PRESSURE SW
4WD SW
PARKING BRAKE SW
BRAKE FLUID SW
GENERATOR(L) (TO PAGE 8-41)
UPSHIFT RESISTOR
RELAY ; UPSHIFT-1
ECM(A4) (TO PAGE8-51, 53)
COMBINATION SW (TO PAGE 8-60)
ILLUMINATION CONTROLLER (3) (TO PAGE 8-79)
DERM (B1) (TO PAGE 8-384)
DERM (B2) (TO PAGE 8-384)
0.3 R/G
(M/T)
FENDER-LH
FENDER-RH
BODY-LH

CONNECTOR LIST

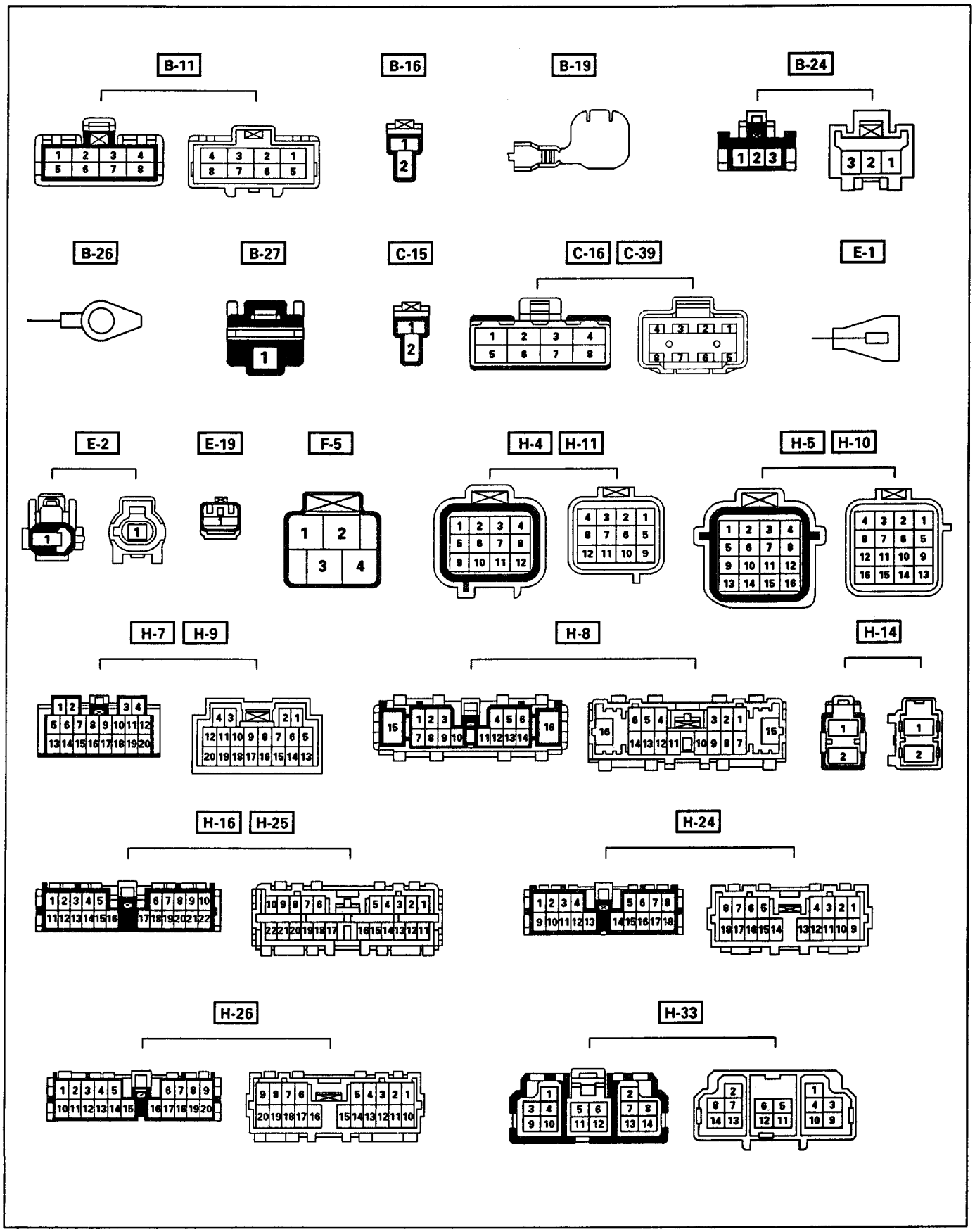

Fig. 8-338

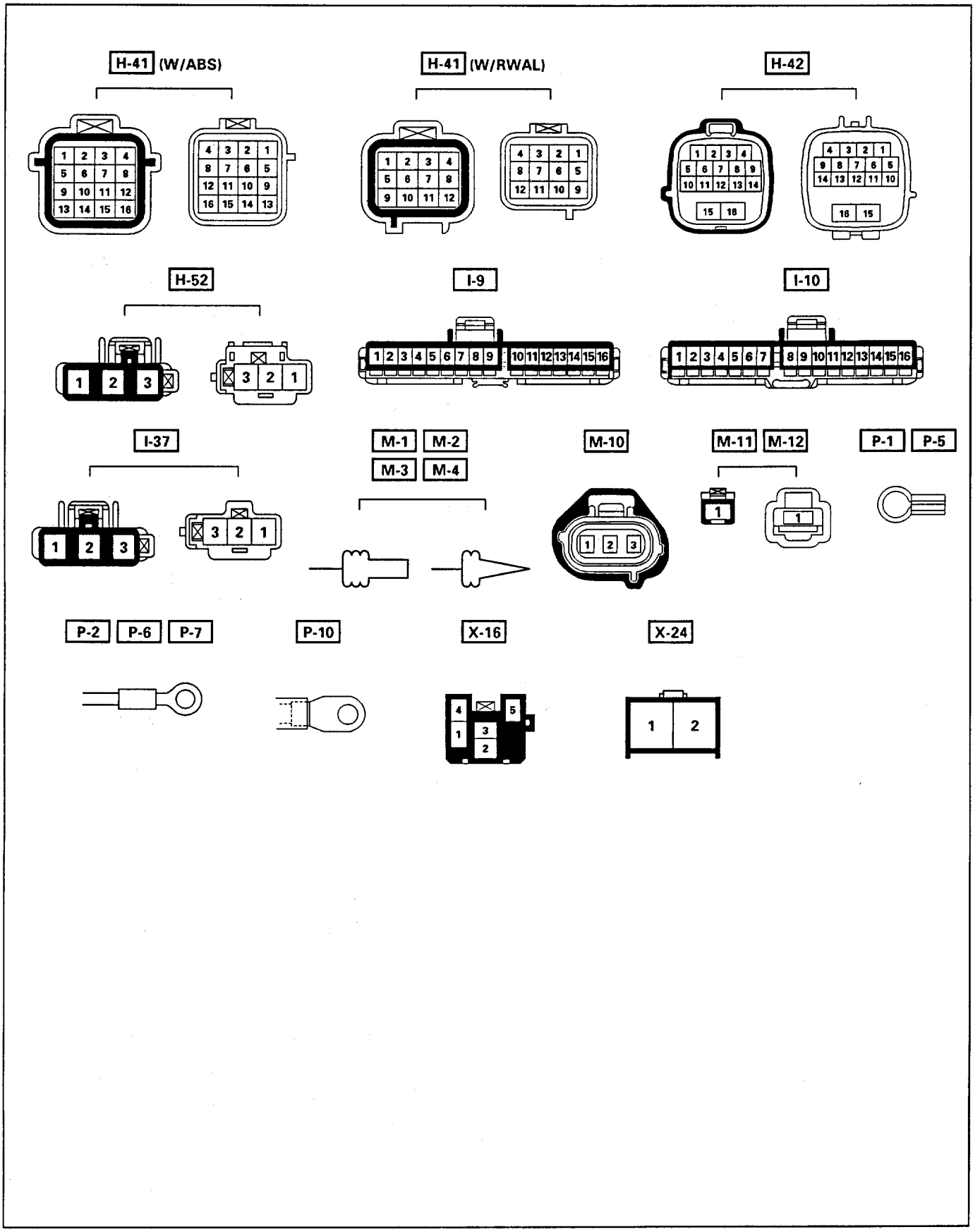
H-41 (W/ABS)
H-41 (W/RWAL)
H-42
H-52
I-9
I-10
I-37
M-1
M-2
M-3
M-4
M-10
M-11
M-12
P-1
P-5
P-2
P-6
P-7
P-10
X-16
X-24

Fig. 8-339

DIAGNOSIS

QUICK CHART FOR CHECK POINTS

1. Speedometer

Trouble mode \ Check point	Speedometer	Vehicle speed sensor	Cable harness
1-1 Speedometer and odometer do not function	○ (3)	○ (1)	○ (2)
1-2 Speedometer does not function (Odometer is normal)	○ (1)		
1-3 Odometer does not function (Speedometer is normal)	○ (1)		
1-4 Speedometer needle fluctuates (May be wide fluctuation)	○ (3)	○ (1)	○ (2)
1-5 Speedometer needle jumps erratically	○ (3)	○ (1)	○ (2)

NOTE: Figure in parenthesis "( )" indicates the order of inspection.

2. Tachometer

Trouble mode \ Check point	Tachometer	Ignition control module	Cable harness
2-1 Tachometer does not function	○ (3)	○ (1)	○ (2)
2-2 Tachometer needle fluctuates (May be wide fluctuation)	○ (3)	○ (1)	○ (2)
2-3 Tachometer needle jumps erratically	○ (3)	○ (1)	○ (2)

NOTE: Figure in parenthesis "( )" indicates the order of inspection.

3. Voltmeter

Trouble mode \ Check point	Meter assembly	Voltmeter	Cable harness
3-1 Voltmeter needle does not move	○ (2)	○ (3)	○ (1)
3-2 Voltage reading is too low (high)	○ (2)	○ (3)	○ (1)

NOTE: Figure in parenthesis "( )" indicates the order of inspection.

4. Engine coolant temperature (ECT) gauge

Trouble mode \ Check point	Meter assembly	ECT gauge	Thermo unit	Thermo-stat	Cable harness
4-1 Gauge needle does not move	○ (3)	○ (4)	○ (2)		○ (1)
4-2 Gauge reading is too low (or high)	○ (4)	○ (5)	○ (3)	○ (1)	○ (2)
4-3 Needle overshoots (or goes up to the "H" range).	○ (3)	○ (4)	○ (1)		○ (2)

NOTE: Figure in parenthesis "( )" indicates the order of inspection.

5. Oil pressure gauge

Trouble mode \ Check point	Meter assembly	Oil pressure meter	Oil pressure unit	Cable harness
5-1 Oil pressure meter needle does not move	○ (3)	○ (4)	○ (1)	○ (2)
5-2 Oil pressure gauge reading is too low (or high)	○ (3)	○ (4)	○ (2)	○ (1)
5-3 Needle overshoots (or goes up to 215 lb/in^2.)	○ (3)	○ (4)	○ (2)	○ (1)

NOTE: Figure in parenthesis "( )" indicates the order of inspection.

6. Fuel gauge

Trouble mode \ Check point	Meter assembly	Fuel meter	Fuel tank unit	Cable harness
6-1 Fuel gauge needle does not move	○ (3)	○ (4)	○ (2)	○ (1)
6-2 Even when the tank is filled up with fuel, the needle not reach "F"	○ (3)	○ (4)	○ (2)	○ (1)
6-3 Even when the tank is not full of fuel, the needle overshoots (or goes to "F")	○ (3)	○ (4)	○ (2)	○ (1)

NOTE: Figure in parenthesis "( )" indicates the order of inspection.

7. Warning/indicator light

Trouble mode \ Check point	Light bulb	Parking brake SW	Brake fluid SW	Oil pressure SW	Fuel tank unit	Cable harness
7-1 When the parking brake lever is pulled, the indicator light does not light up.	○ (1)	○ (2)				○ (3)
7-2 Even when the parking brake lever is released, the indicator light does not go off.		○ (1)	○ (2)			○ (3)
7-3 While the engine operating, the oil pressure warning light does not go off.				○ (2)		○ (1)
7-4 Even when the tank is full of fuel, the fuel warning light lights up.					○ (2)	○ (1)
7-5 Even when the tank is empty, the fuel warning light does not light up.	○ (1)				○ (2)	○ (3)

NOTE: Figure in parenthesis "( )" indicates the order of inspection.

1. SPEEDOMETER

1-1. SPEEDOMETER AND ODOMETER DO NOT FUNCTION

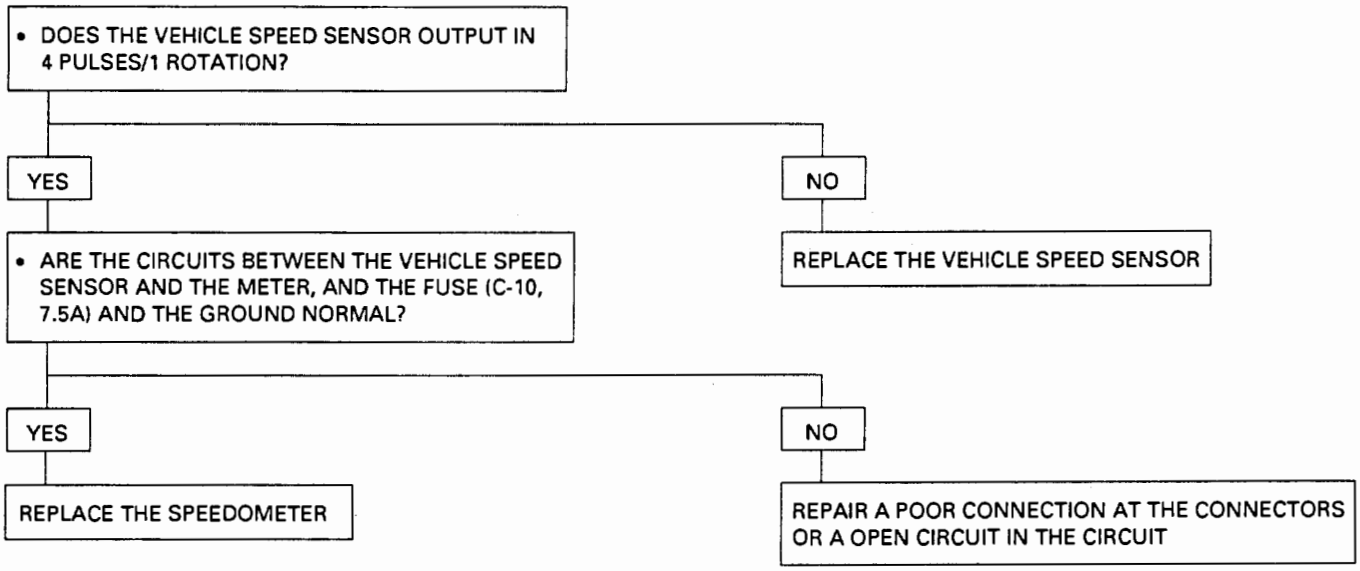

1-2. SPEEDOMETER DOES NOT FUNCTION (ODOMETER IS NORMAL)

REPLACE THE SPEEDOMETER ASSEMBLY

1-3. ODOMETER DOES NOT FUNCTION (SPEEDOMETER IS NORMAL)

REPLACE THE SPEEDOMETER ASSEMBLY

1-4. NEEDLE FLUCTUATES (MAY BE WIDE FLUCTUATION)

- DOES THE VEHICLE SPEED SENSOR OUTPUT NORMALLY?

YES

REPLACE THE SPEEDOMETER

THE OSCILLOSCOPE WAVEFORM IS DEFORMED

REPLACE THE VEHICLE SPEED SENSOR, OR REPAIR A POOR CONNECTION AT THE CONNECTORS IN THE CIRCUIT OR A FAILURE IN THE CABLE HARNESS

1-5. SPEEDOMETER NEEDLE JUMPS ERRATICALLY

- DOES THE VEHICLE SPEED SENSOR OUTPUT NORMALLY?

YES

REPLACE THE SPEEDOMETER

AN ABNORMAL PERIODIC WAVEFORM IS OUTPUT BY OSCILLOSCOPE

REPLACE THE VEHICLE SPEED SENSOR, OR REPAIR A POOR CONNECTION AT THE CONNECTORS IN THE CIRCUIT OR A FAILURE IN THE CABLE HARNESS

Inspection of a waveform by oscilloscope

1. Connect a resistance of 1.3 to 5k ohm (1.4W or more) between the harness side connectors 14 I-9 and 8 I-10 of the meter.

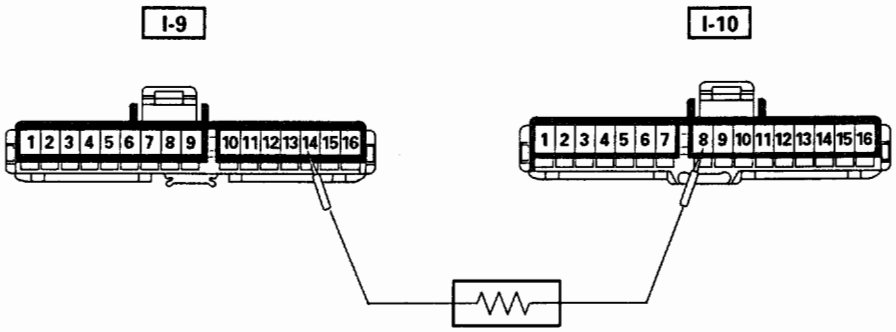

2. Install a speedometer tester.
2. Turn on the starter SW.
3. Check the waveform at the time when the vehicle speed is at 37mph.

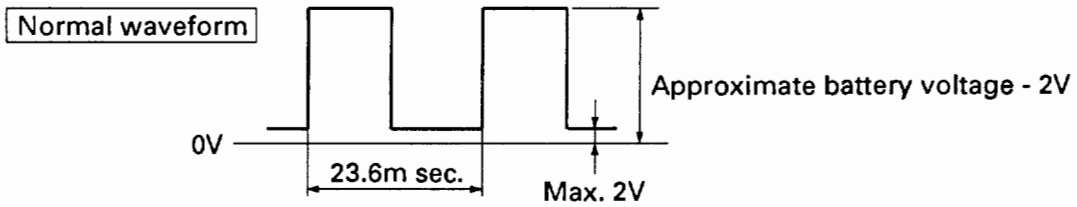

Fig. 8-340

2. TACHOMETER

2-1 TACHOMETER DOES NOT FUNCTION

- IS THE PULSE INPUT NORMAL?

YES → REPLACE THE TACHOMETER

NO → REPLACE THE IGNITION CONTROL MODULE, OR REPAIR A POOR CONNECTION OF THE CONNECTORS IN THE CIRCUIT OR A FAILURE IN THE CABLE HARNESS

2-2 TACHOMETER NEEDLE FLUCTUATES (MAY BE WIDE FLUCTUATION)

- IS THE PULSE INPUT NORMAL?

YES

REPLACE THE TACHOMETER

NO

THE WAVEFORM BY OSCILLOSCOPE IS DEFORMED. (ABNORMAL INPUT)

REPLACE THE DIS CONTROLLER, OR REPAIR A POOR CONNECTION OF THE CONNECTORS IN THE CIRCUIT OR A FAILURE IN THE CABLE HARNESS

2-3 TACHOMETER NEEDLE JUMPS ERRATICALLY

- IS THE PULSE INPUT NORMAL?

YES

REPLACE THE TACHOMETER

NO

AN ABNORMAL PERIODIC WAVEFORM IS OUTPUT BY OSCILLOSCOPE

REPLACE THE IGNITON CONTROL MODULE, OR REPAIR A POOR CONNECTION OF THE CONNECTORS IN THE CIRCUIT OR A FAILURE IN THE HARNESS

Inspection of a waveform by oscilloscope

1. Check the waveform of the meter assembly connector 3 I-9 (Tachometer pulse).

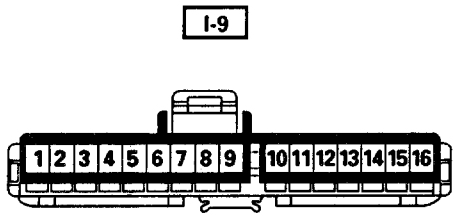

Normal waveform

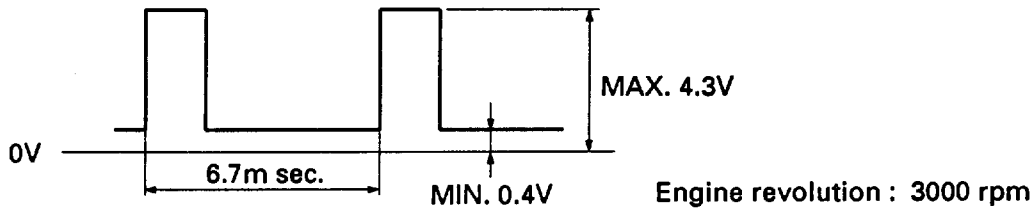

Fig. 8-341

3. VOLTMETER

3-1 VOLTMETER NEEDLE DOES NOT MOVE

3-2 VOLTAGE READING IS TOO LOW (OR HIGH)

- IS THE METER ASSEMBLY CONNECTOR I-9 SECURELY CONNECTED?

YES

- DISCONNECT THE METER ASSEMBLY CONNECTORS I-9 AND I-10
- TURN ON THE STARTER SWITCH
- IS THE BATTERY VOLTAGE APPLIED BETWEEN THE HARNESS SIDE CONNECTORS 14 I-9 AND 4 I-9 OF THE METER ASSEMBLY?

YES

- IS THERE A OPEN CIRCUIT IN THE PRINTED CIRCUIT OF THE METER ASSEMBLY?

YES

REPLACE THE PRINTED CIRCUIT BOARD

NO

CHECK THE VOLTMETER AND REPLACE IT A IF NECESSARY (REFER TO THE CHECKING OF THE VOLTMETER IN THIS SECTION)

NO

REPAIR A POOR CONNECTION OF THE CONNECTORS OR A OPEN CIRCUIT IN THE CIRCUIT BETWEEN THE FUSE C-10 (10A) AND 14 I-9 , OR THE CONNECTORS 4 I-9 AND 4 C-39

NO

CONNECT THE CONNECTOR SECURELY

4. ENGINE COOLANT TEMPERATURE (ECT) GAUGE

4-1 NEEDLE DOES NOT MOVE

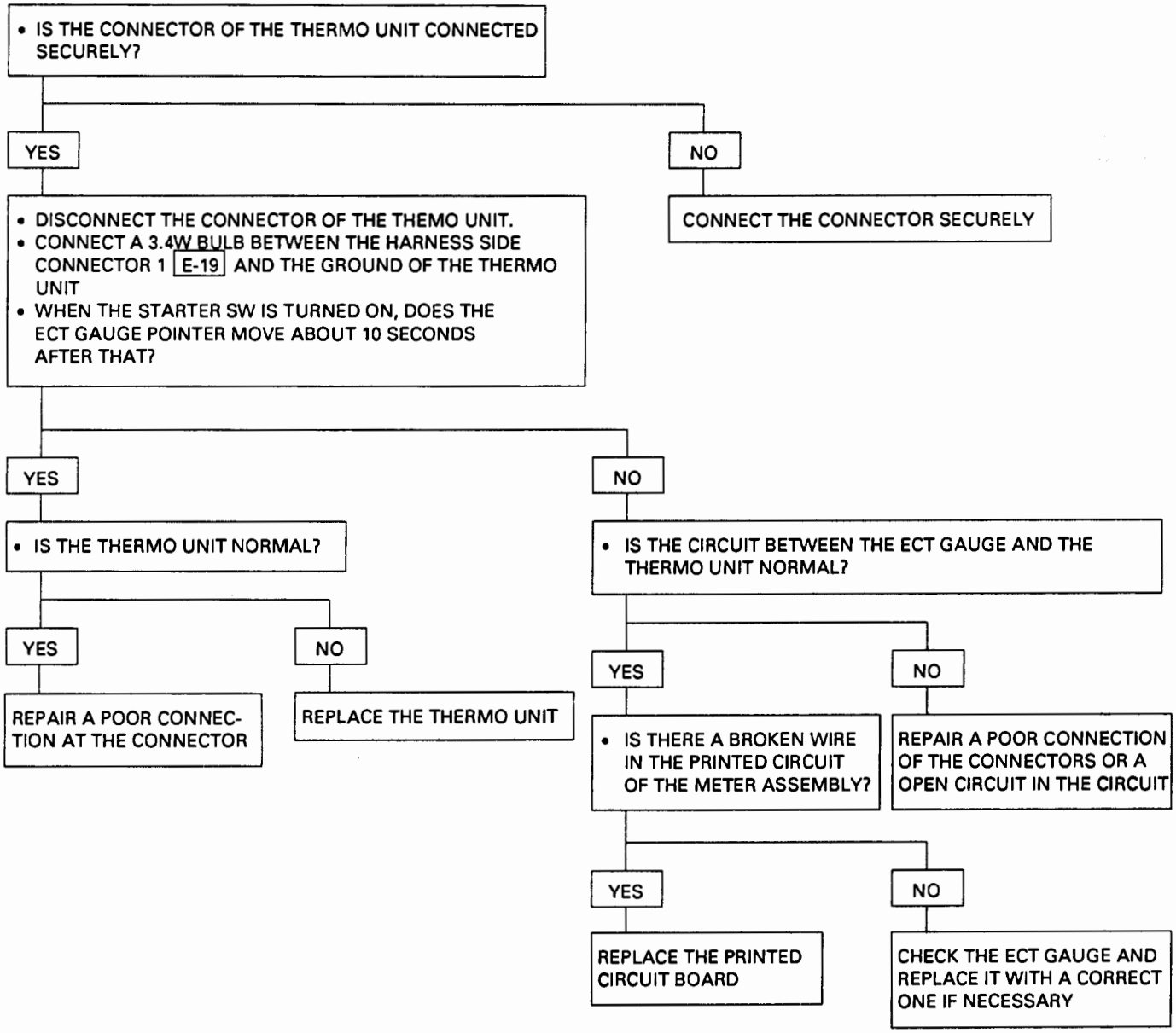

4-2 GAUGE READING IS TOO LOW (OR HIGH)

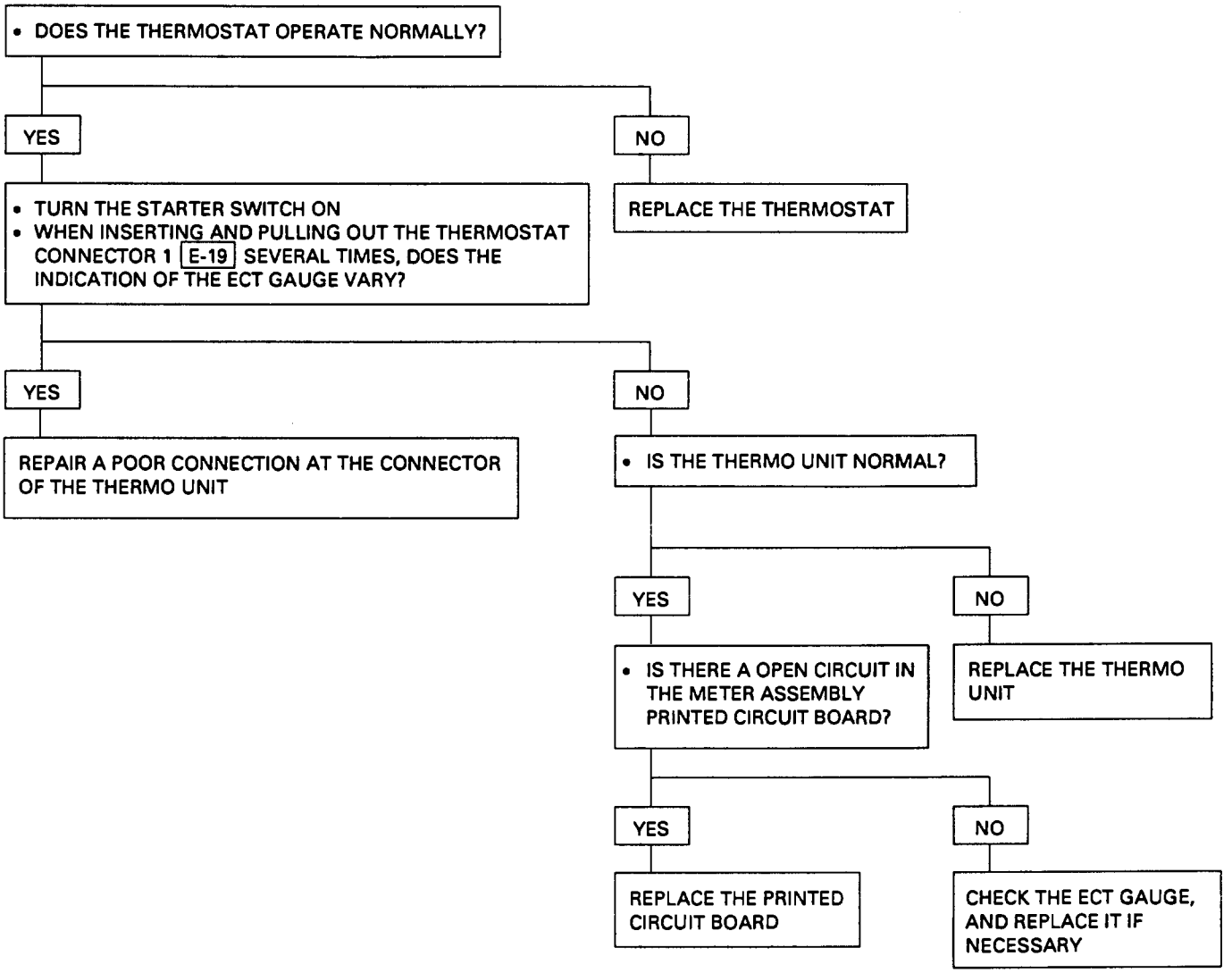

4-3 NEEDLE OVERSHOOTS (GOES UP TO THE "H" RANGE)

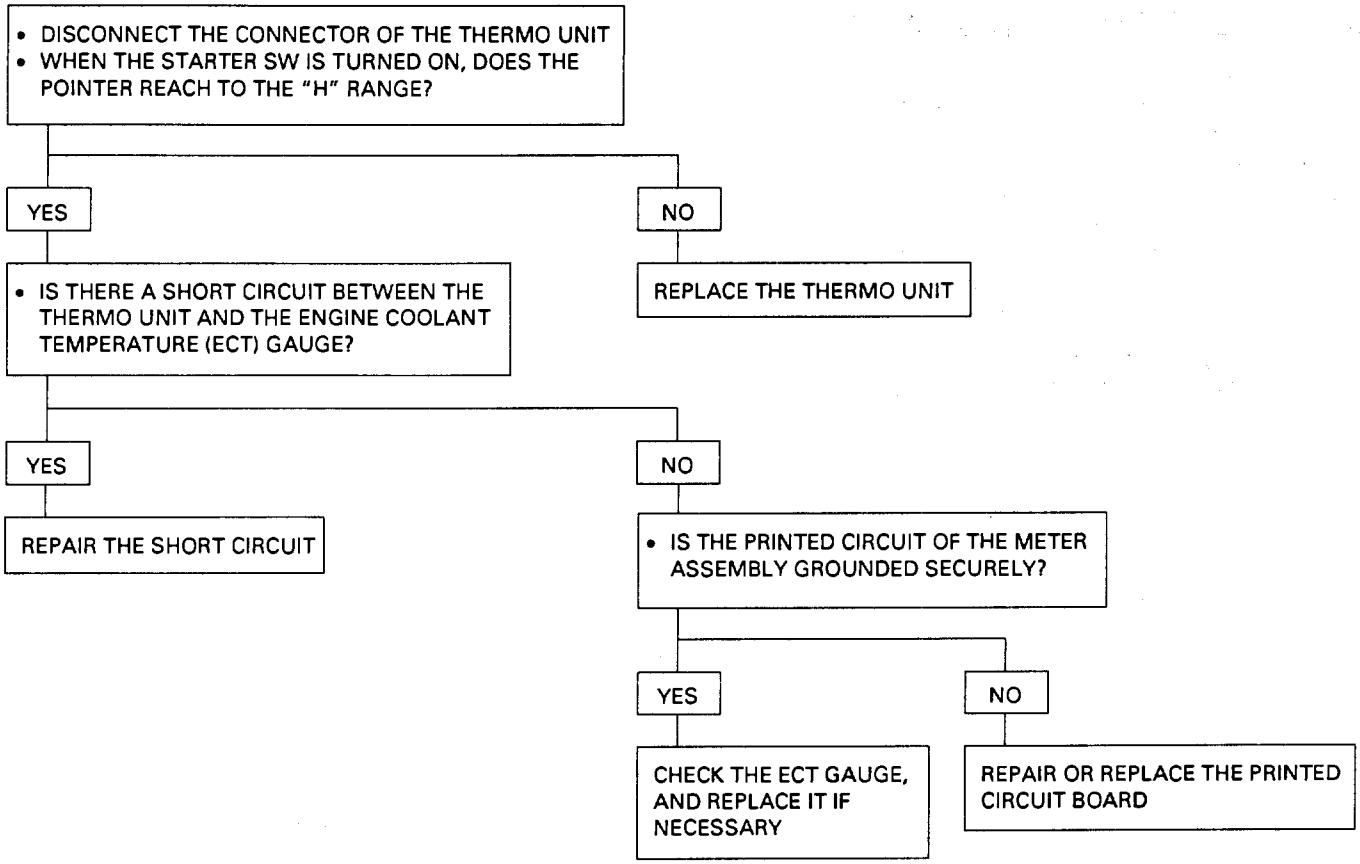

5. OIL PRESSURE GAUGE

5-1 NEEDLE DOES NOT MOVE

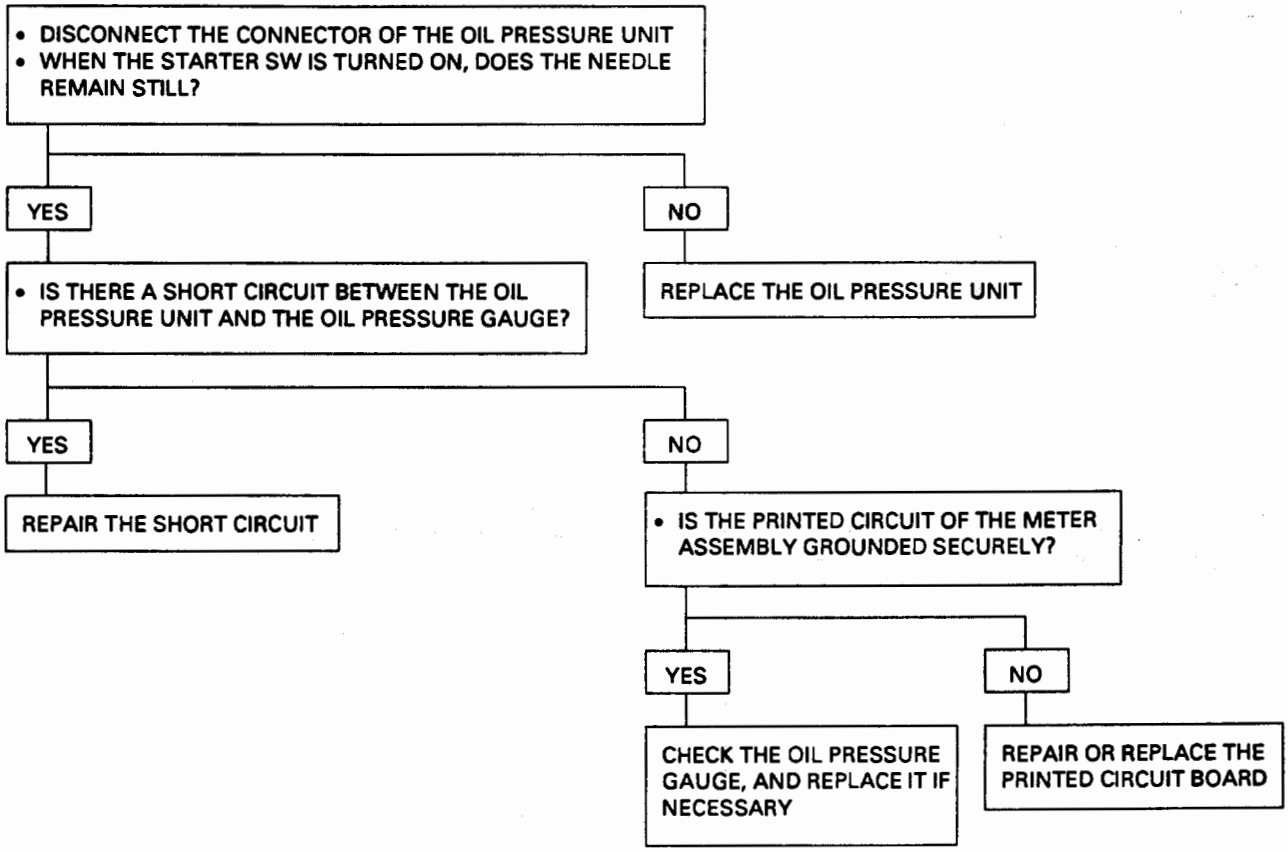

5-2 OIL PRESSURE GAUGE READING IS TOO LOW (OR HIGH)

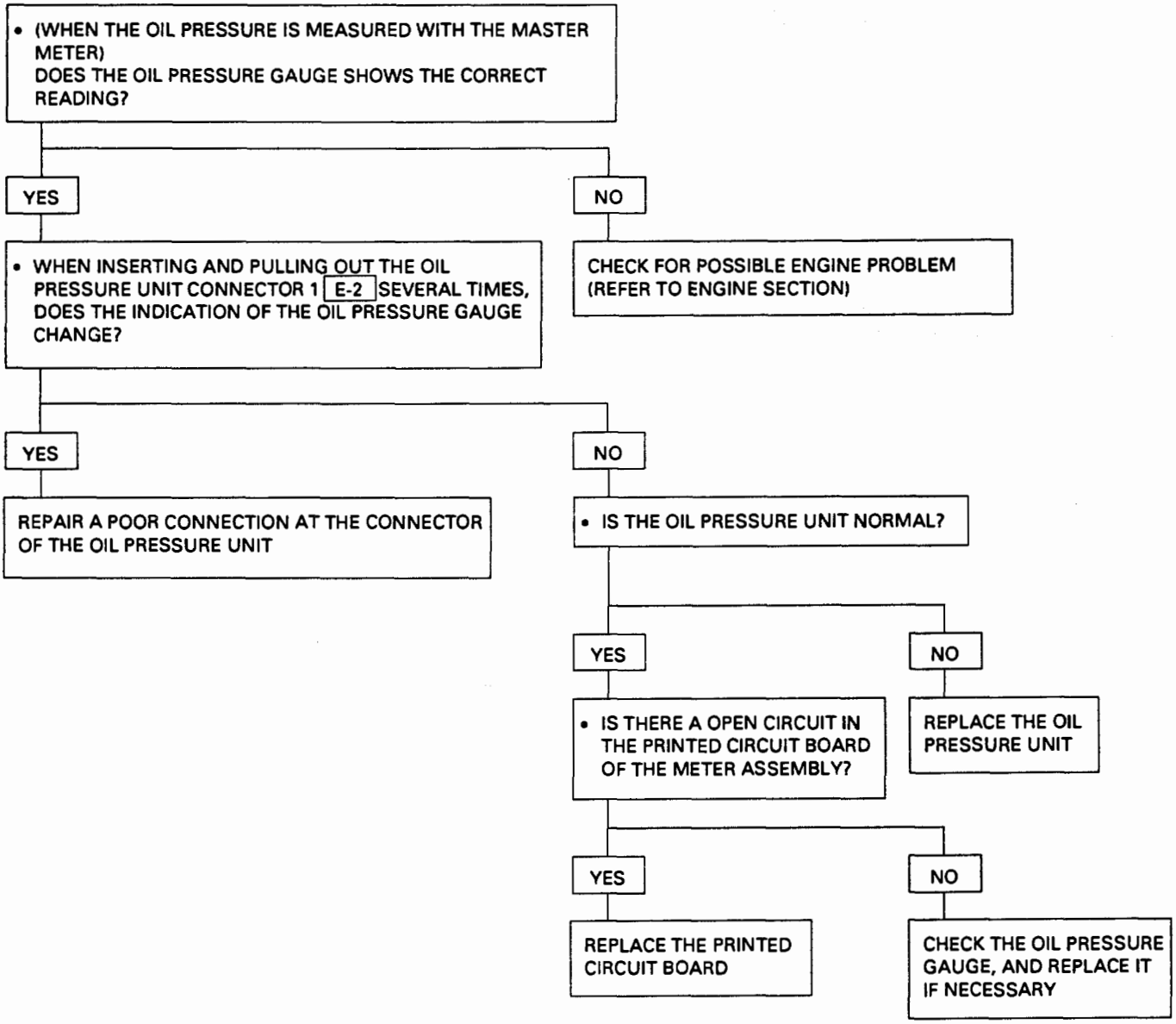

5-3 NEEDLE OVERSHOOTS (GOES UP TO 215 lb/in²)

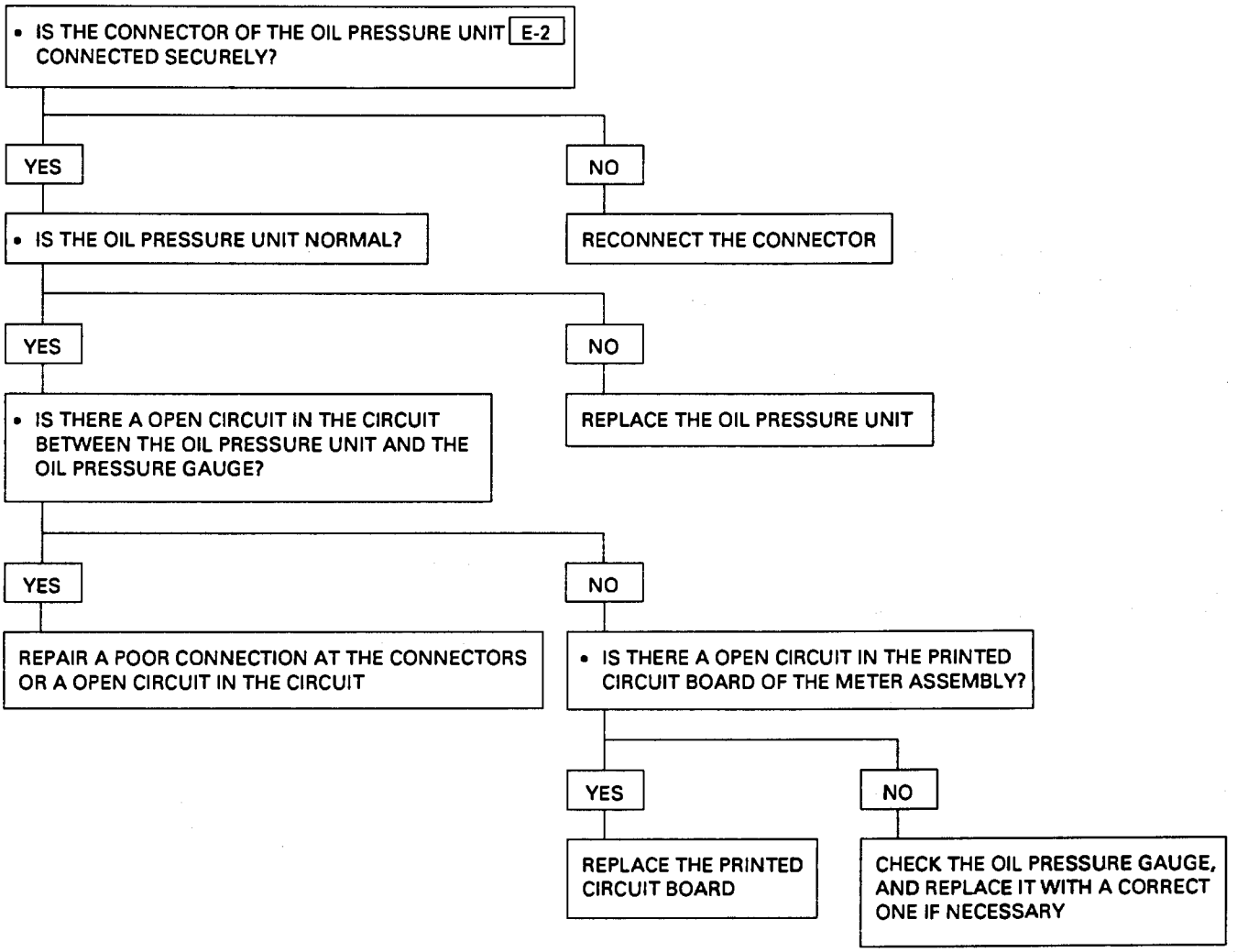

6. FUEL GAUGE

6-1 FUEL GAUGE NEEDLE DOES NOT MOVE

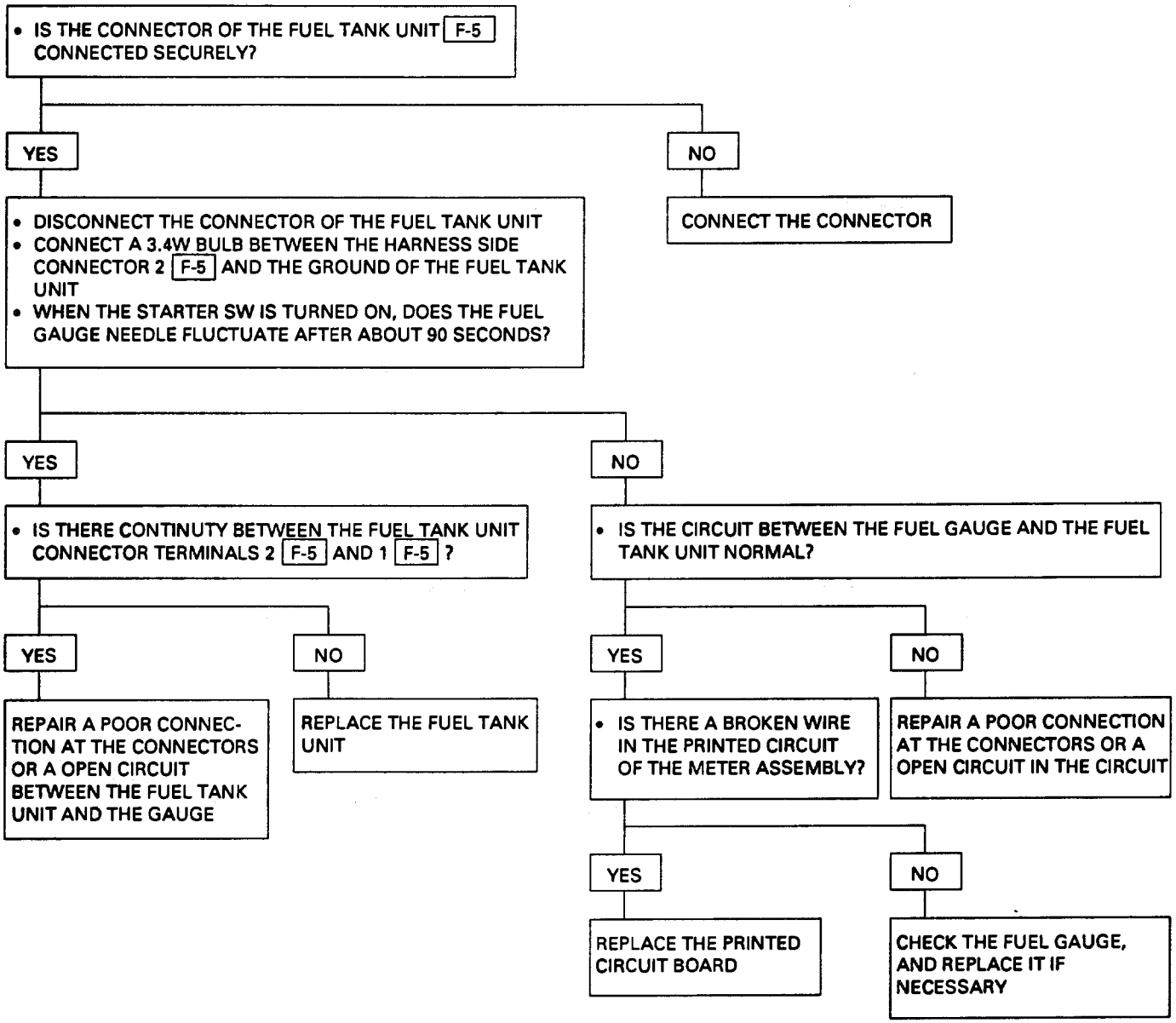

6-2 EVEN WHEN THE TANK IS FILLED UP WITH FUEL, THE NEEDLE DOES NOT REACH "F"

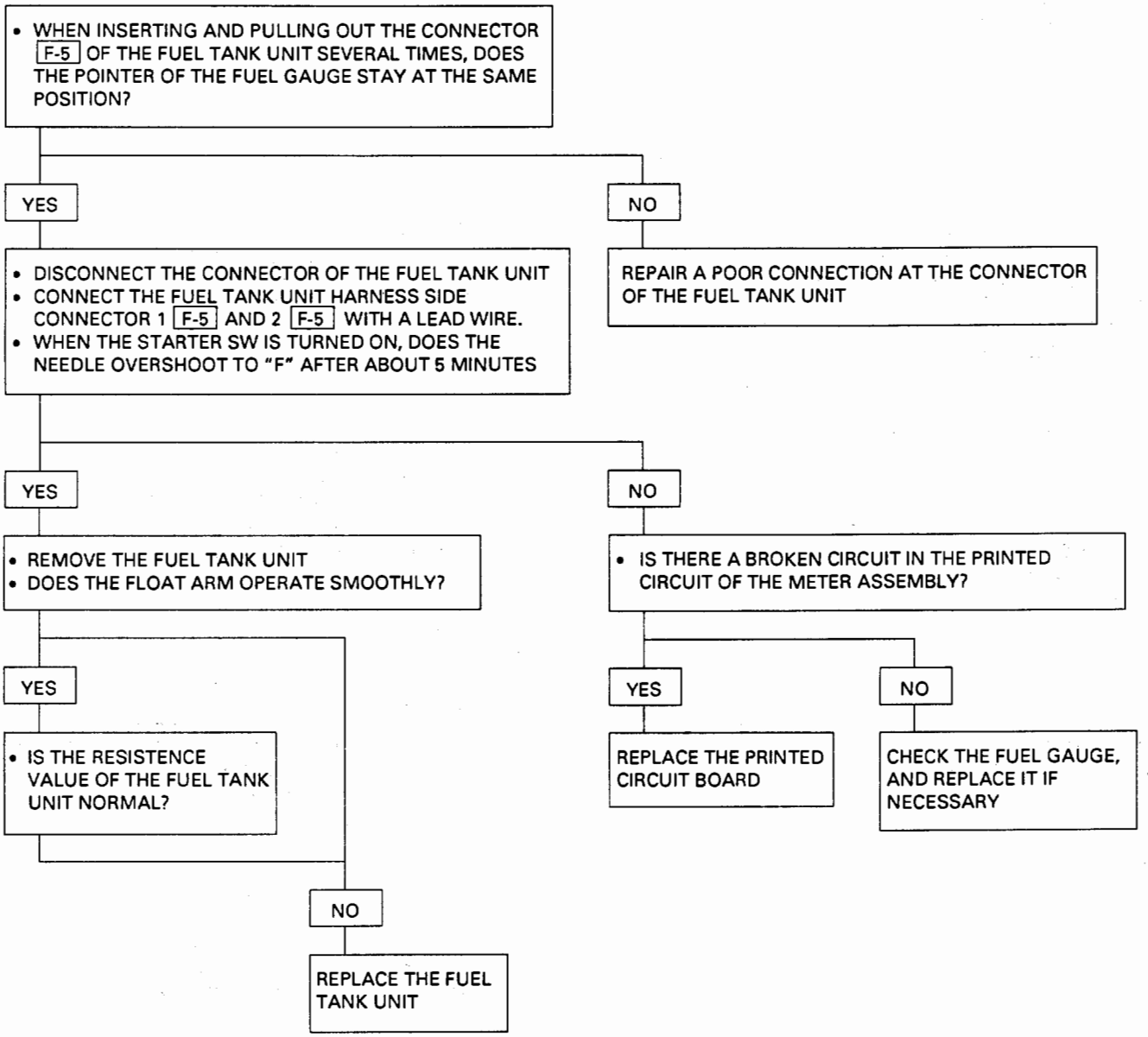

6-3 WHEN THE TANK IS NOT FULL OF FUEL, THE NEEDLE OVERSHOOTS (OR GOES UP TO "F")

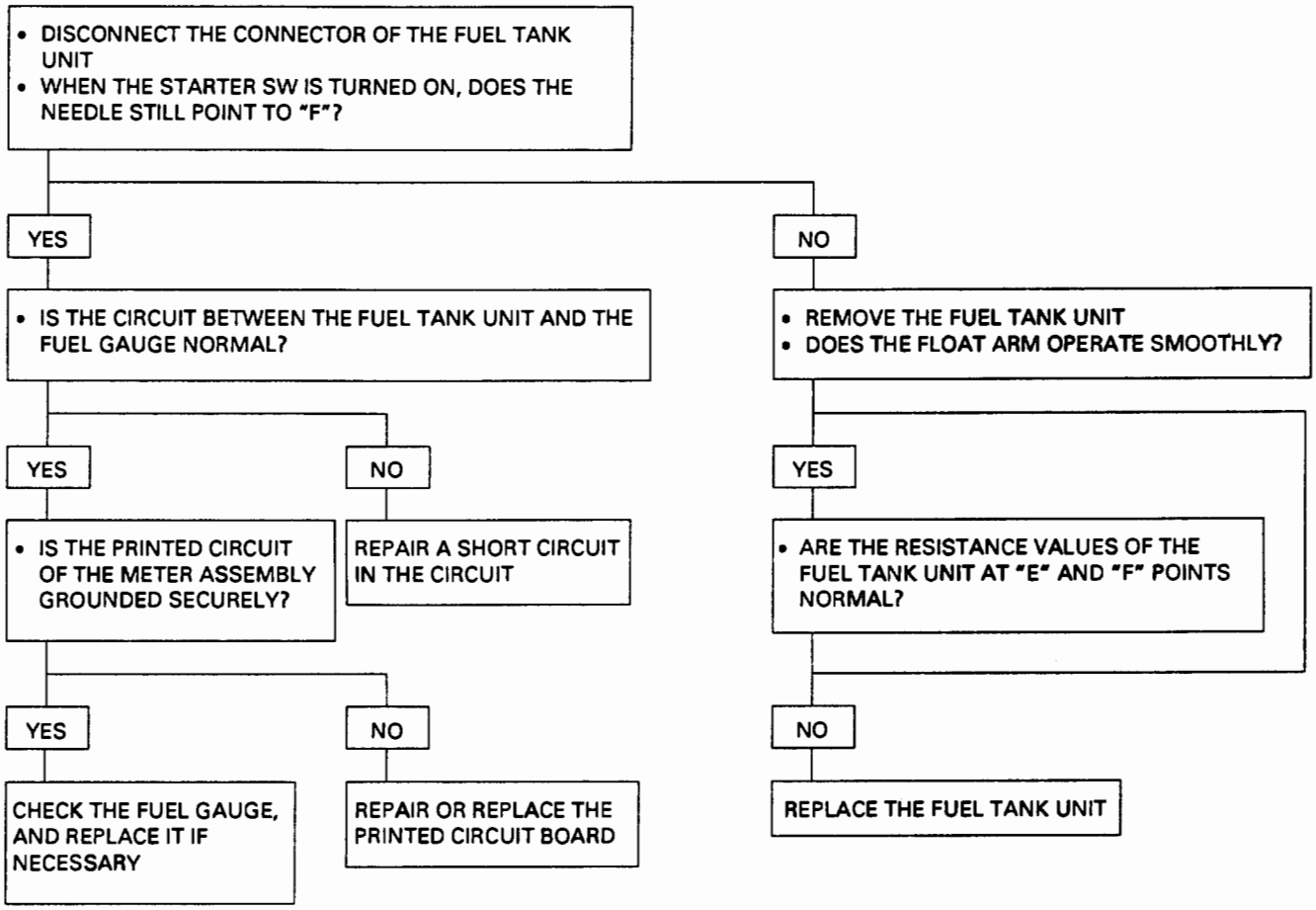

7. WARNING/INDICATOR LIGHT

7-1 WHEN THE PARKING BRAKE LEVER IS PULLED, THE INDICATOR LIGHT DOES NOT LIGHT UP

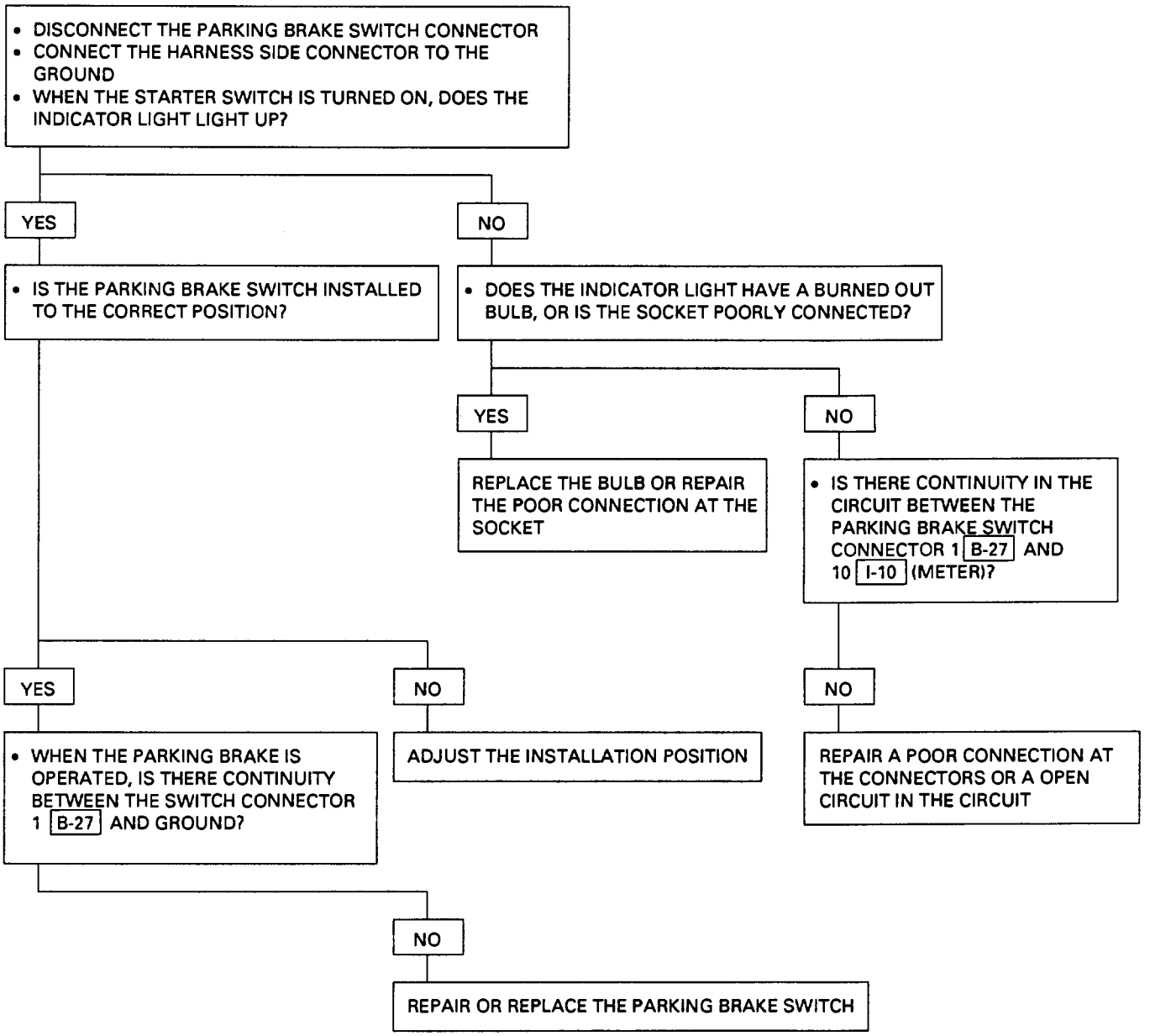

7-2 EVEN WHEN THE PARKING BRAKE LEVER IS RELEASED, THE INDICATOR LIGHT DOES NOT GO OFF

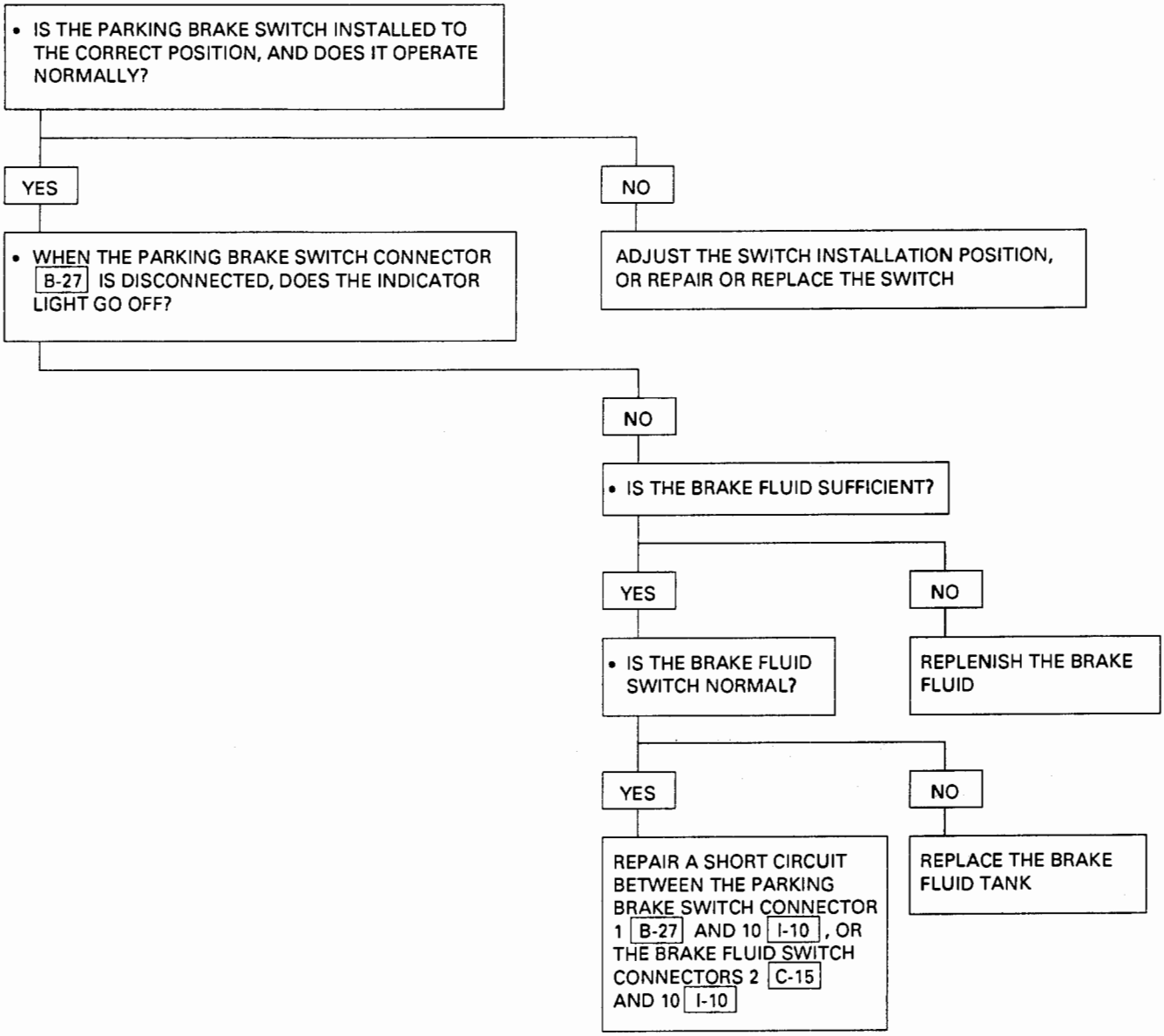

7-3 WHILE THE ENGINE IS OPERATING, THE OIL PRESSURE WARNING LIGHT WILL NOT GO OFF

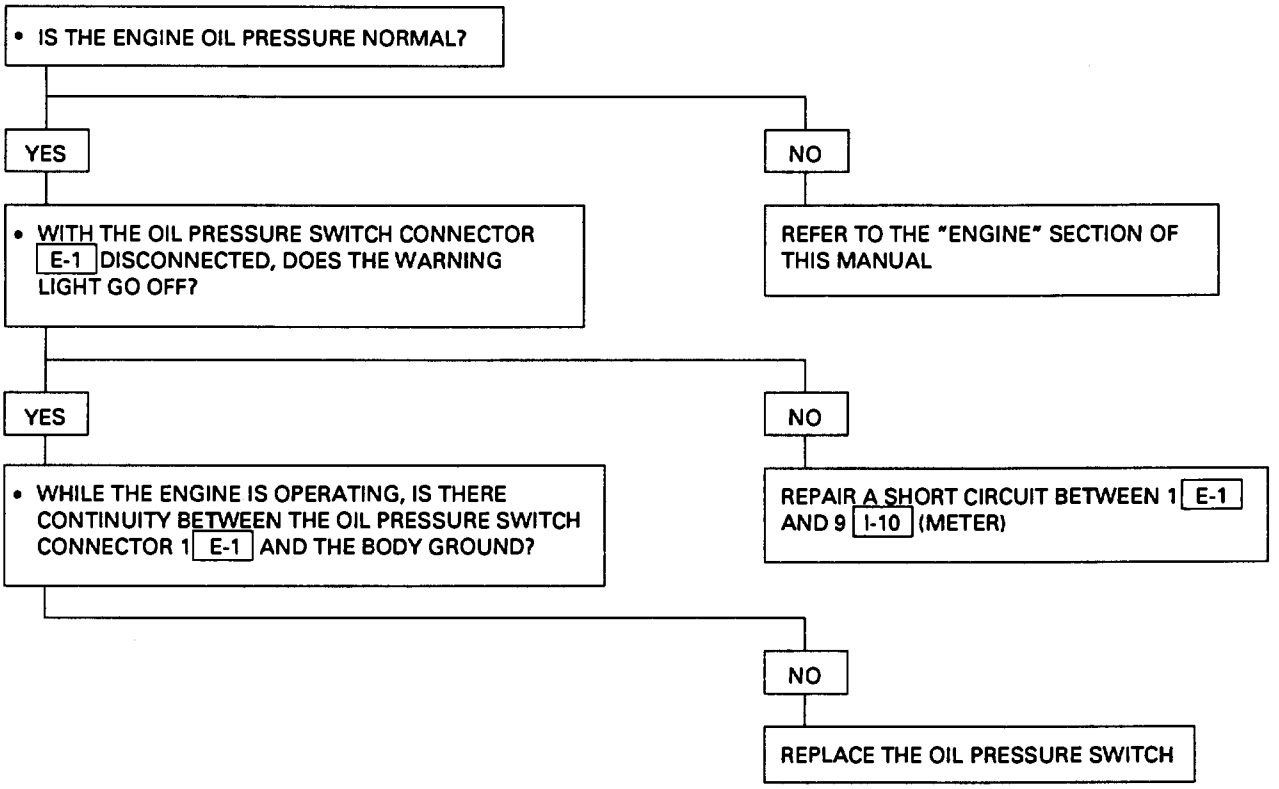

7-4 EVEN WHEN THE FUEL TANK IS FULL WITH FUEL, THE FUEL WARNING LIGHT LIGHTS UP

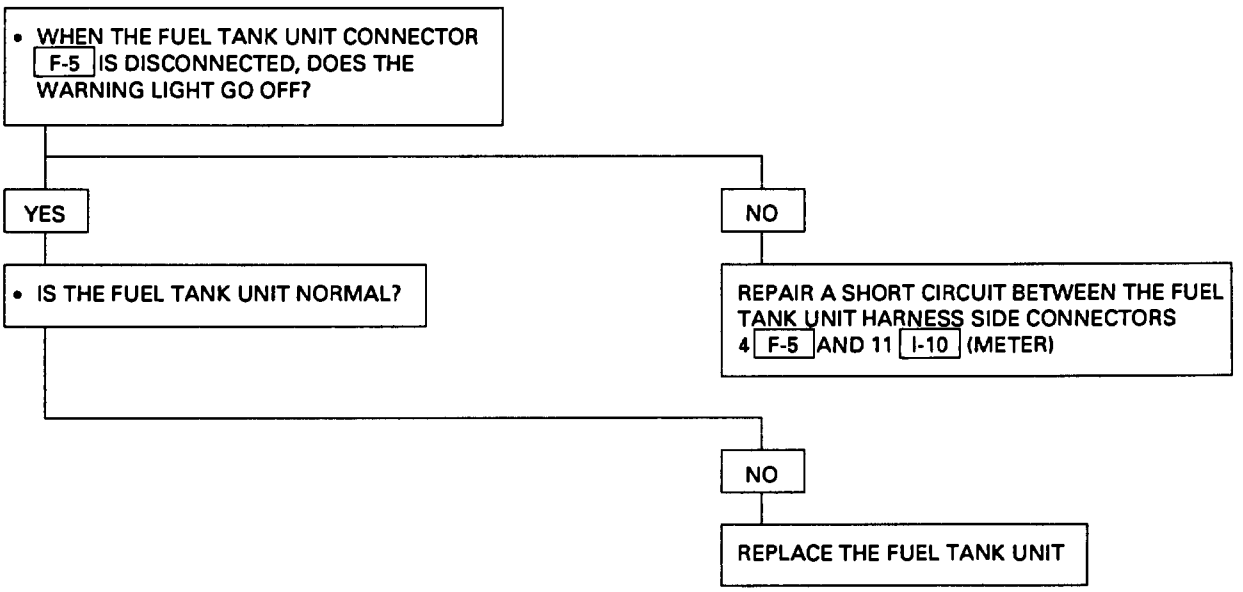

7-5 EVEN WHEN THE FUEL TANK IS EMPTY, THE LOW FUEL WARNING LIGHT DOES NOT LIGHT UP

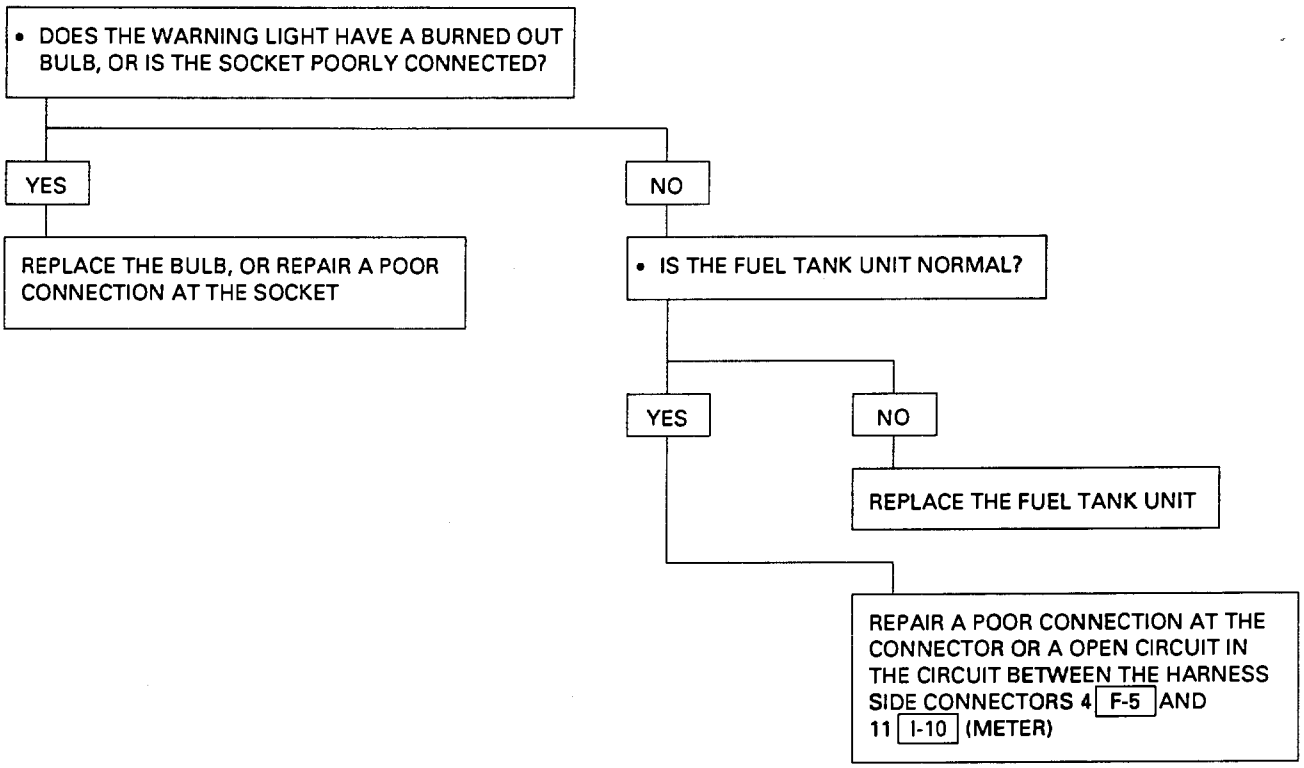

STARTER SWITCH

Refer to "START AND CHARGING" in this section.

LIGHTING SWITCH/DIMMER • PASSING SWITCH/HEADLIGHT

Refer to "HEADLIGHT AND FOG LIGHT" in this section.

TURN SIGNAL SWITCH

Refer to "TURN SIGNAL LIGHT, HAZARD WARNING LIGHT, CORNERING LIGHT, BACKUP LIGHT AND HORN" in this section.

ILLUMINATION CONTROLLER

Refer to the "FRONT SIDE MARKER LIGHT, PARKING LIGHT, TAILLIGHT, LICENSE PLATE LIGHT AND ILLUMINATION LIGHT" in this section.

METER ASSEMBLY

LAYOUT FOR GAUGES, WARNING, INDICATOR AND ILLUMINATION LIGHTS

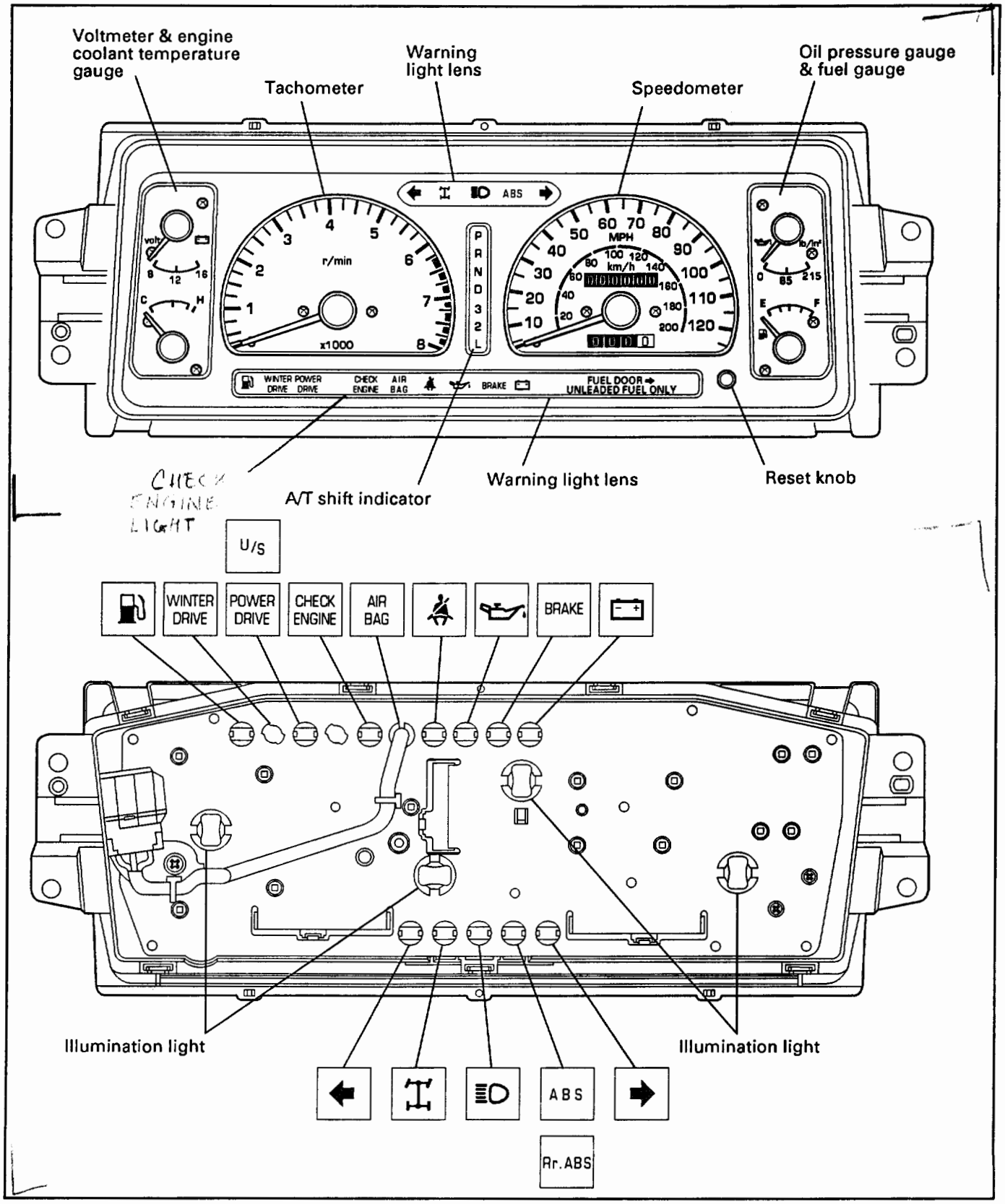

Fig. 8-342

TABLE FOR METER CONNECTOR TERMINAL CONNECTIONS

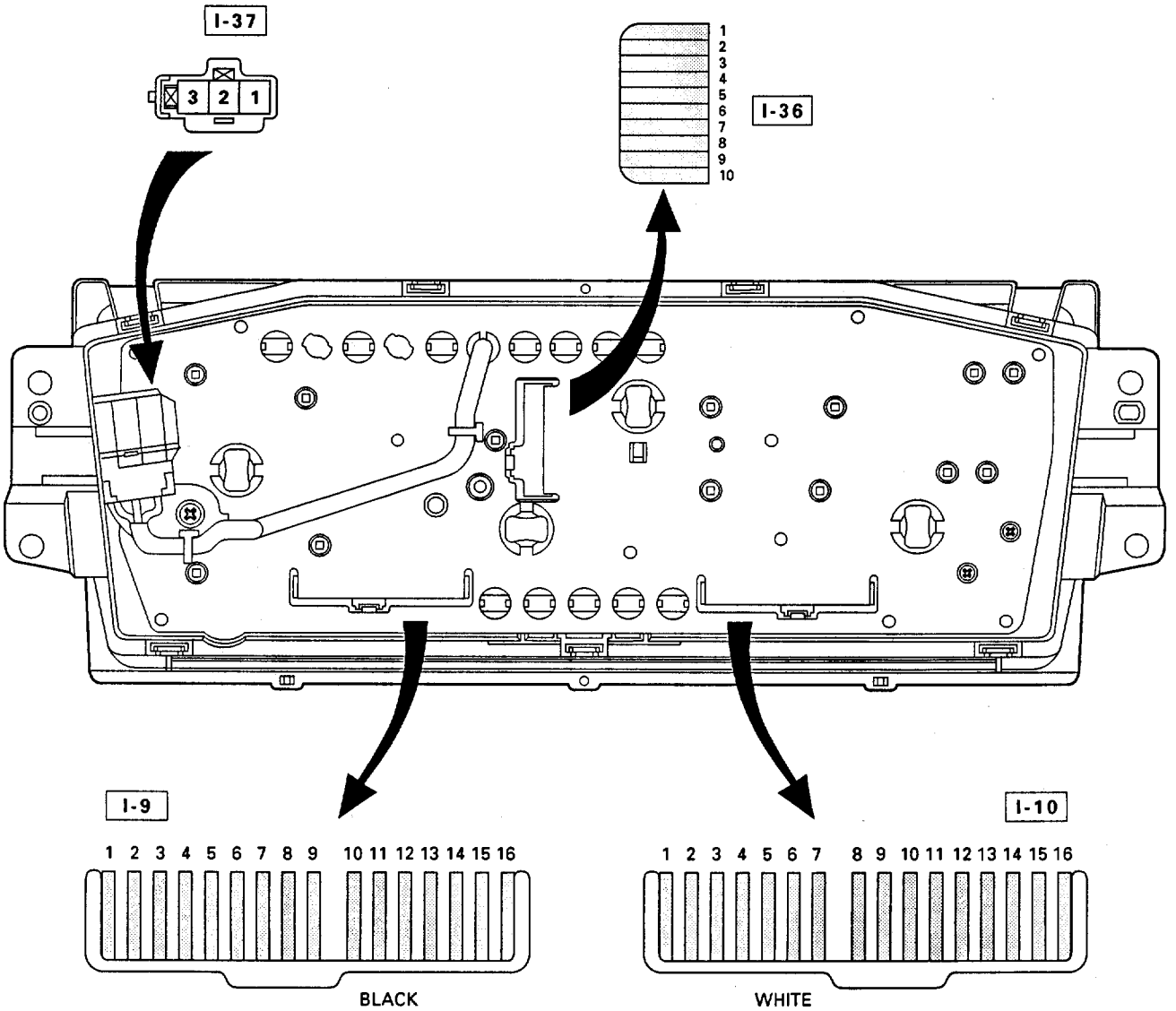

Connector No. / Terminal No.	I-9
1	Ground
2	Engine coolant temperature gauge
3	Tachometer
4	Ground
5	Illumination light (+)
6	Illumination light (-)
7	Winter drive
8	Power drive, upshift
9	Upshift
10	–
11	–
12	Check engine
13	Seat belt
14	Starter SW
15	4WD
16	Turn signal indicator light (left)

Connector No. / Terminal No.	I-10
1	Turn signal indicator light (right)
2	ABS or RWAL indicator light
3	High-beam indicator light
4	High-beam indicator light
5	–
6	Ground
7	Speedometer
8	Speedometer
9	Oil pressure warning light
10	Brake warning light
11	Fuel warning light
12	Charge warning light
13	Illumination (+)
14	Illumination (-)
15	Fuel gauge
16	Oil pressure gauge

Connector No. / Terminal No.	I-36
1	–
2	L position
3	2 position
4	3 position
5	D position
6	N position
7	R position
8	–
9	A/T shift control unit
10	P position

Fig. 8-343

REMOVAL (FIG. 8-344)

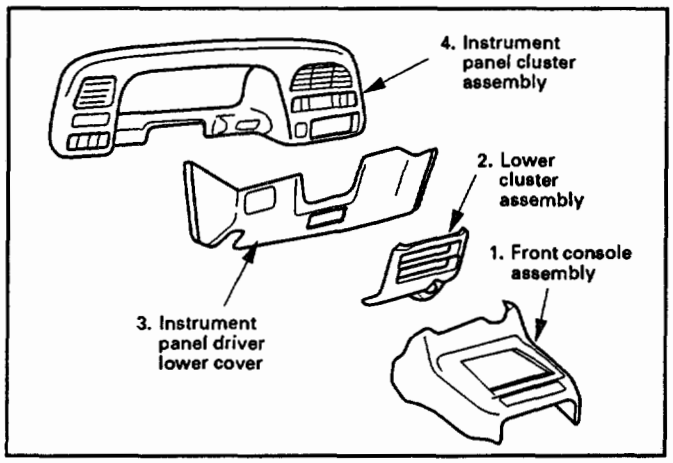

Fig. 8-344

Preparation: Disconnect the battery ground cable.

1. **Front console assembly**
2. **Lower cluster assembly**
3. **Instrument panel driver lower cover**
4. **Instrument panel cluster assembly**
   - Refer to FOG LIGHT SWITCH removal steps in this section.
5. **Meter assembly**
   - Remove four screws of the meter assembly.
   - Disconnect the meter connectors.

CAUTION:
The removed meter assembly should be placed upright or with its face side up. (Fig. 8-345)

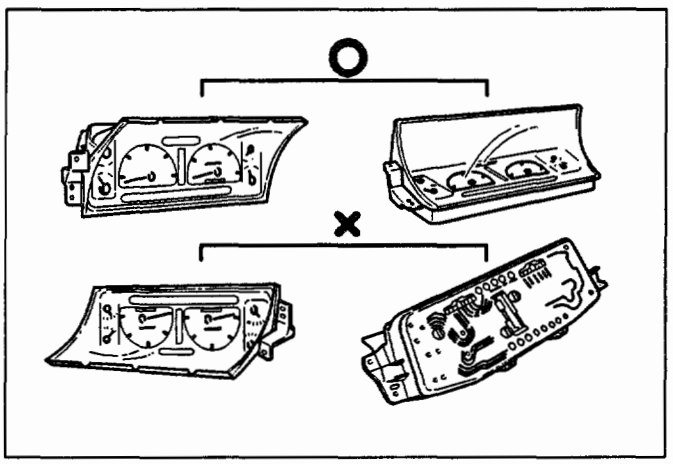

Fig. 8-345

INSTALLATION

To install, follow the removal steps in the reverse order.

SPEEDOMETER (FIG. 8-346)

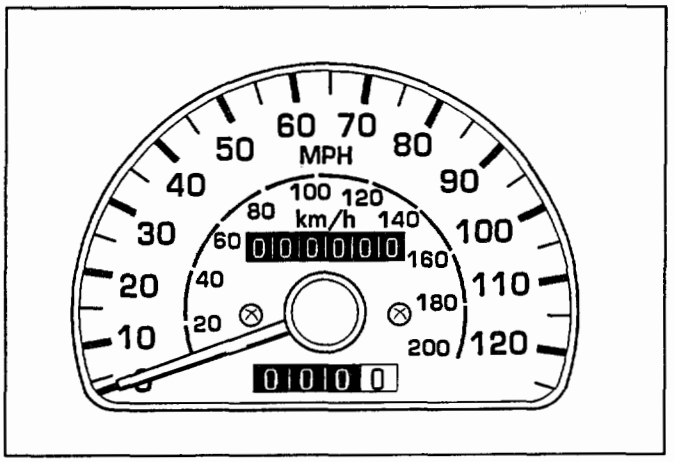

Fig. 8-346

The speedometer is made up of the cross coil type ammeter (movement) that displays indications, the stepper motor that drives and adds up the odometer and trip meter, and the driving circuit (printed circuit board) that makes exchanges between the pulse signals and the current.
Also, the vehicle speed sensor, which is incorporated into the speedometer, is activated by receiving signals (vehicle speed) detected by the vehicle speed sensor installed to the transmission.

ON-VEHICLE SERVICE

Check the meter display accuracy and the operation of the odometer with the speedometer tester.

CAUTION:
Inappropriate tire inflation may affect the accuracy of the odometer.
(To conduct this test, refer to the tester manufacturer's instruction manual.)

(MPH)

Tester display speed	Meter display permissible level
20	18.3 – 21.7
40	38.3 – 41.7
60	58.3 – 61.7
80	78.8 – 82.8
100	98.8 – 102.8
120	118.5 – 123.1

NOTE: Since the meter display permissible levels above are specifications solely for the meter, they are to be used as reference values when conducting on-vehicle service.

INDIVIDUAL INSPECTION

1. Remove the speedometer from the meter assembly and measure the resistance and the current consumption between each terminal. (Fig. 8-347)
Replace the speedometer when the result of inspection is found abnormal.

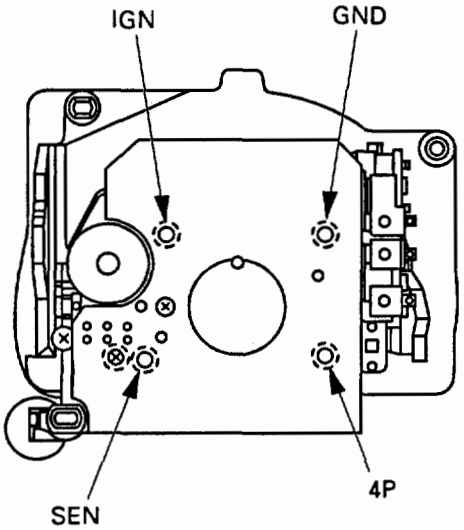

Resistance value

Terminal symbol \ Tester terminal	Red (+)	Black (–)	Black (–)	Red (+)
IGN – GND	IGN	GND	IGN	GND
	∞		30.6 – 37.4k	
SEN – GND	SEN	GND	SEN	GND
	28.8 – 35.2k		∞	
4P – GND	4P	GND	4P	GND
	13.5 – 16.5k		∞	

Note: Use the analog type circuit tester (range: x 1k)

Current value

Terminal symbol	Current consumption	Remarks
IGN – GND ⊕ ⊖	85 ± 15mA (when 12 ± 1V applied)	No signal input

Note: 1. Use the analog type circuit tester.
2. Since the current consumption fluctuates when the source voltage varies, check to be sure that the voltage applied is 12V ± 1V.

Fig. 8-347

VEHICLE SPEED SENSOR (INCORPORATED IN THE SPEEDOMETER)

INSPECTION

Remove the speedometer from the meter assembly, and measure the resistance value between the terminals. (Fig. 8-348)
Replace the speedometer assembly when the result of inspection is found abnormal.

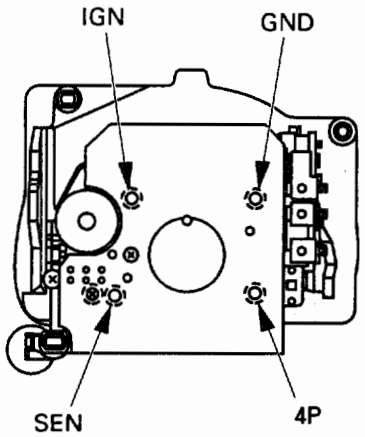

Terminal Symbol \ Tester terminal	Red (+)	Black (-)	Black (-)	Red (+)
4P – GND	4P	GND	4P	GND
	13.5 – 16.5k		∞	

Note: Use the analog type circuit tester.

Fig. 8-348

REMOVAL (FIG. 8-349)

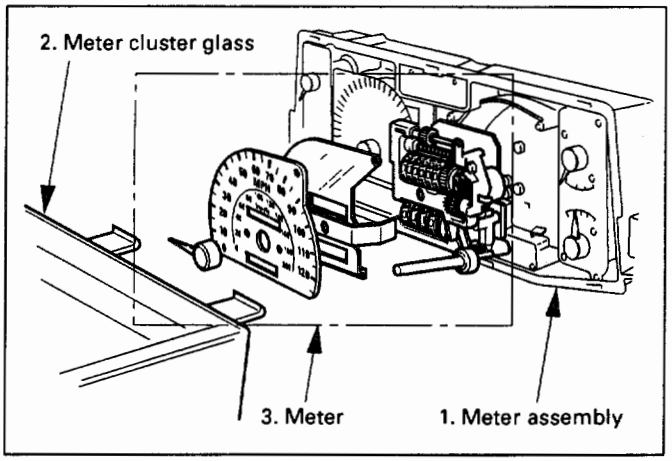

Fig. 8-349

Preparation: Disconnect the battery ground cable.

1. **Meter assembly**
   - Refer to meter assembly removal steps in this section.
2. **Meter cluster glass**
   - Remove it by pushing the seven catches on the peripheral with your finger. (Fig. 8-350)

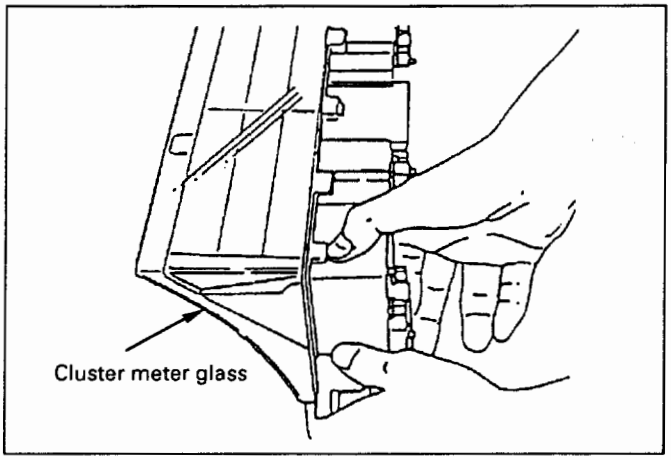

Fig. 8-350

3. **Meter**
   - Remove four screws securing the meter at the back side. (Fig. 8-351)
   - Lift the meter carefully to remove it. (Fig. 8-352).

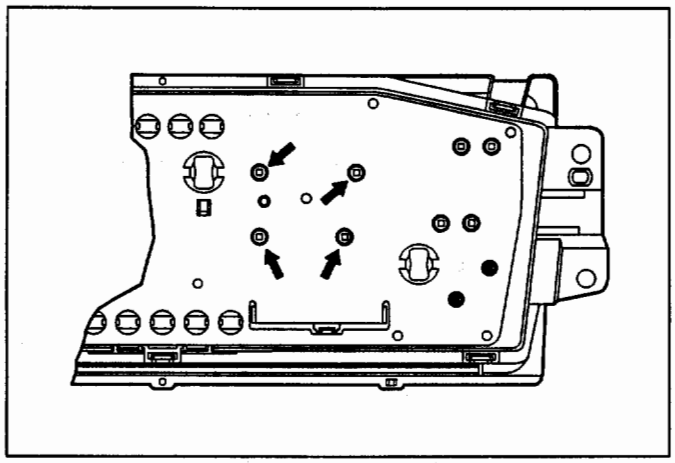

Fig. 8-351

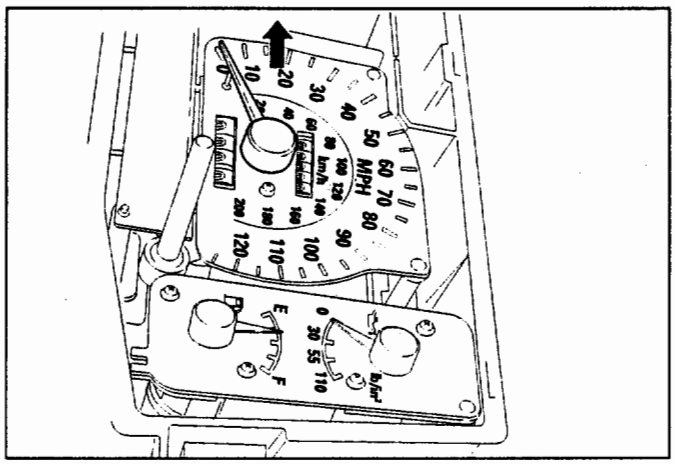

Fig. 8-352

INSTALLATION

To install, follow the removal steps in the reverse order.

TACHOMETER (FIG. 8-353)

The tachometer is made up of the cross coil type ammeter (movement) that displays indications, and the drive circuit (printed board) that makes exchange between the pulse signals and the current.

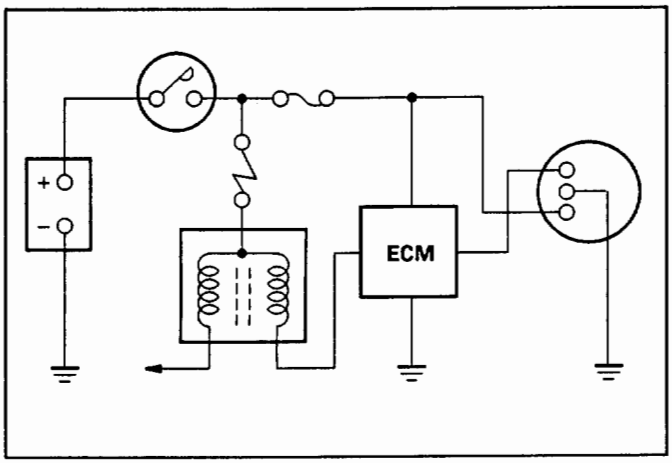

Fig. 8-353

ON-VEHICLE SERVICE

1. Set up the tune-up tester to the engine.
2. Start the engine and compare the readings displayed by the tachometer and the tester.
   When the difference between these two readings differs largely from the specified value, replace it with a correct one.

(rpm)

Tester display speed	Meter display permissible level
750	690 – 770
1000	900 – 1060
2000	1820 – 2090
3000	2820 – 3120
4000	3820 – 4180
5000	4820 – 5180
6000	5820 – 6180
7000	6820 – 7180

NOTE: Since the meter display permissible levels above are specifications solely for the meter, they are to be used as reference values when conducting on-vehicle inspection.

INDIVIDUAL INSPECTION

Remove the tachometer from the meter assembly and measure the resistance value and the current consumption between each terminals. (Fig. 8-354)
Replace the tachometer when the result of inspection is found abnormal.

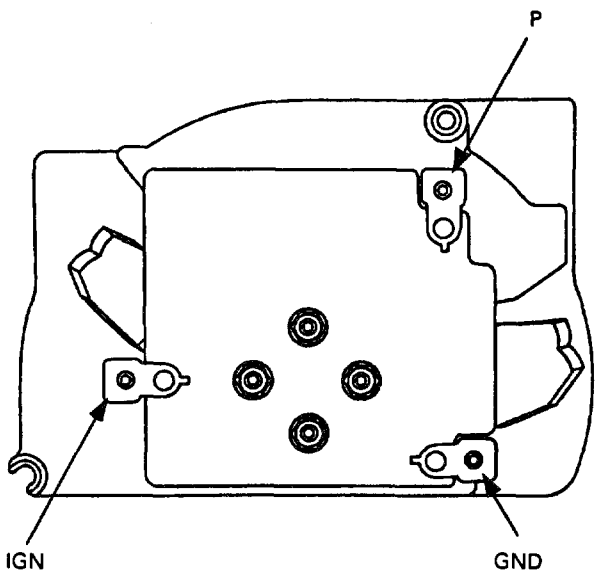

Resistance value

Terminal symbol \ Tester terminal	Red (+)	Black (–)	Black (–)	Red (+)
IGN – GND	IGN	GND	IGN	GND
	∞		23 – 31k	
Ⓟ– GND	P	GND	P	GND
	∞		24.7 – 33.4k	

Note: Use the analog type circuit tester (range: x 1k)

Current value

Terminal symbol	Current consumption	Remarks
IGN – GND ⊕ ⊖	90 ± 15mA (12 ± 1V when voltage applied)	No signal input

Note: 1. Use the analog type circuit tester.
2. Since the current consumption fluctuates as the power voltage varies, check to be sure that the voltage applied is 12 ± 1V.

Fig. 8-354

REMOVAL (FIG. 8-355)

Preparation: Disconnect the battery ground cable.

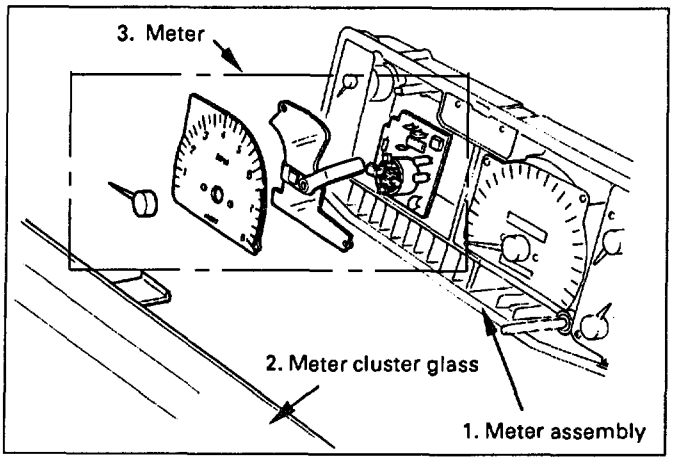

Fig. 8-355

1. **Meter assembly**
2. **Meter cluster glass**
3. **Meter**
   - Remove three screws securing the meter at the back side. (Fig. 8-356)

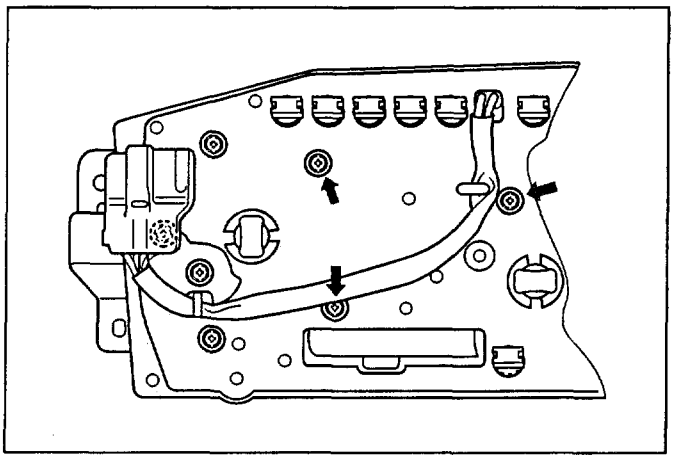

Fig. 8-356

INSTALLATION

To install, follow the removal steps in the reverse order.

VOLTMETER

Circuit diagram of voltmeter (Fig. 8-357)

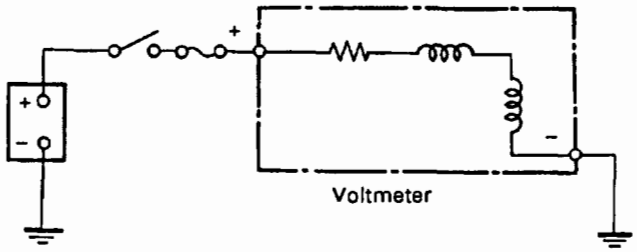

Fig. 8-357

INSPECTION

1. Remove the voltmeter from the meter assembly, and measure the resistance value between each terminal. (Fig. 8-358)
   Replace the voltmeter when the result of inspection is found abnormal.

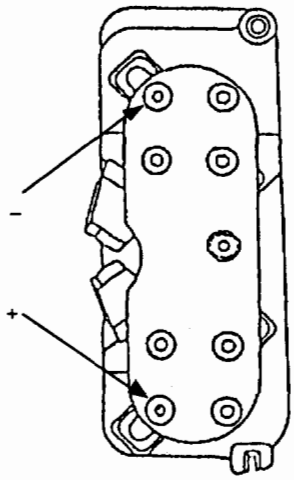

(Ω)

Terminal symbol	Resistance value
(+) - (–)	82 ± 8.2

Note: The resistance value between (+) and (–) includes the resistance value of the coolant temperature gauge since they share these terminals.

Fig. 8-358

REMOVAL (FIG. 8-359)

Preparation: Disconnect the battery ground cable.

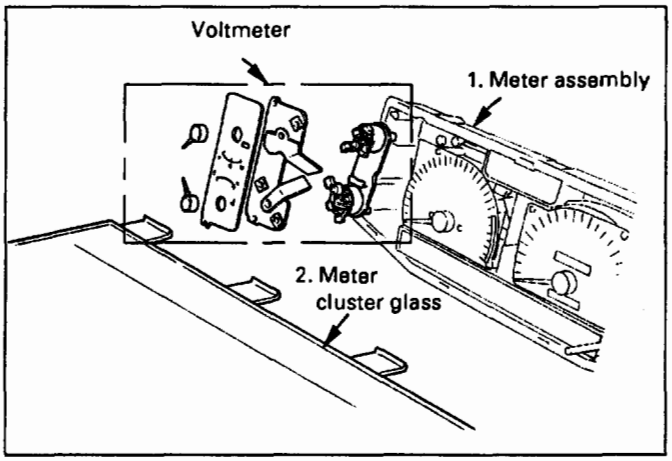

Fig. 8-359

1. **Meter assembly**
2. **Meter cluster glass**

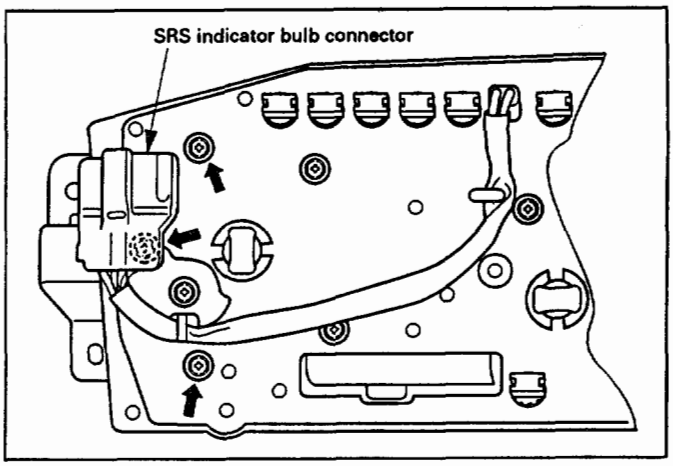

Fig. 8-360

3. **Voltmeter**
   - Loosen the screw for support the Supplemental Restraint System (SRS)-AIR BAG indicator light bulb connector.
   - Remove three screws securing the meter at the back side, and then remove it together with the ECT gauge. (Fig. 8-360)

INSTALLATION

To install, follow the removal steps in the reverse order.

ENGINE COOLANT TEMPERATURE (ECT) GAUGE

CIRCUIT DIAGRAM OF ECT GAUGE (FIG. 8-361)

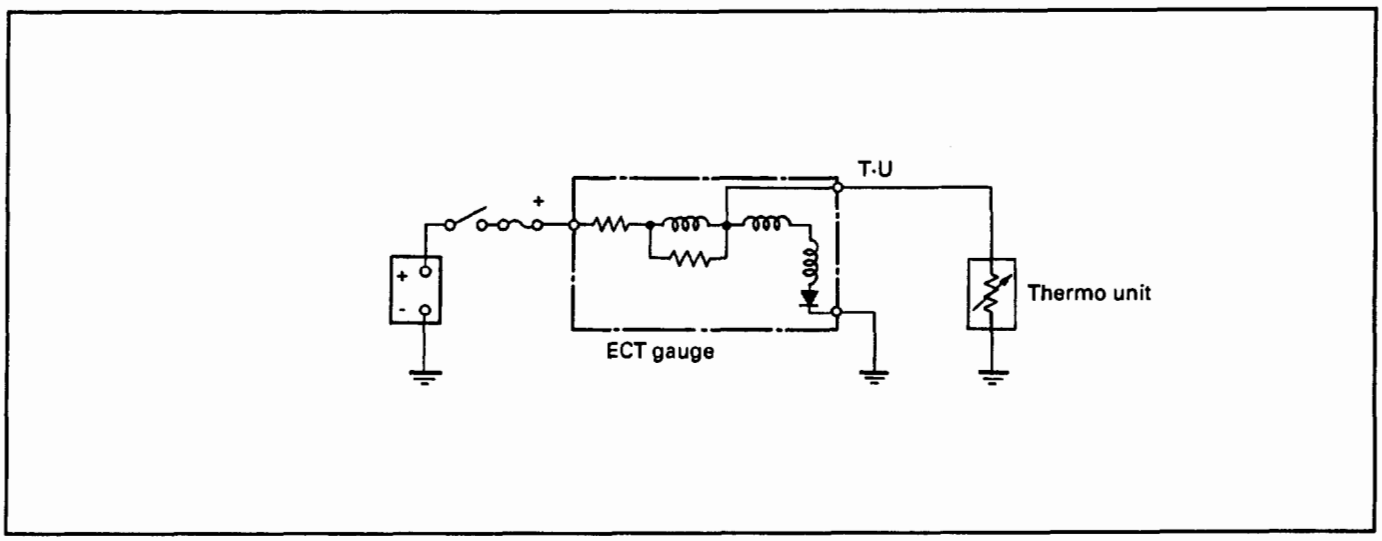

Fig. 8-361

INSPECTION

Remove the engine coolant temperature (ECT) gauge from the meter assembly, and measure the resistance value between each terminal.

(Fig. 8-362)
Replace the ECT gauge when the result of inspection is found abnormal.

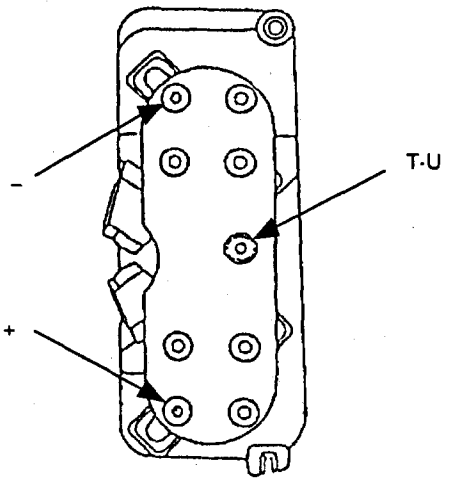

(Ω)

Terminal symbol	Resistance value
(+) - T·U	82 ± 8.2

Fig. 8-362

REMOVAL AND INSTALLATION

Refer to the removal and installation steps the voltmeter.

OIL PRESSURE GAUGE

CIRCUIT DIAGRAM OF THE OIL PRESSURE GAUGE (FIG. 8-363)

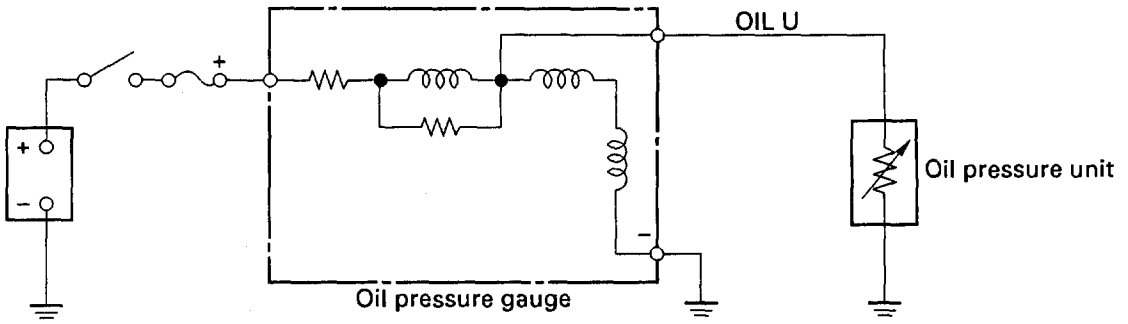

Fig. 8-363

INSPECTION

Remove the oil pressure gauge from the meter assembly, and measure the resistance value between each terminal. (Fig. 8-364)

Replace the gauge when the result of inspection is found abnormal.

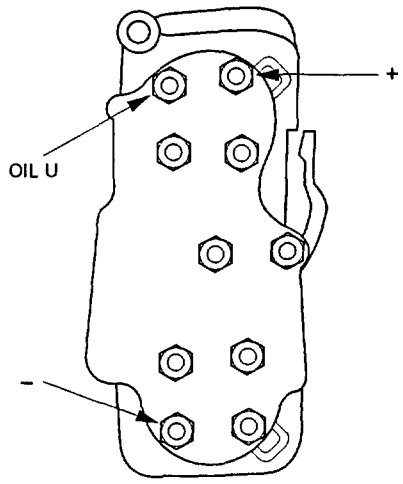

(Ω)

Terminal symbol	Resistance value
(+) - OIL U	65 ± 6.5
OIL U - (–)	98 ± 9.8
(+) - (–)	112 ± 11.2

Note: The resistance value between (+) and (–) includes the resistance value for the fuel gauge since these terminals are shared with the fuel meter.

Fig. 8-364

REMOVAL (FIG. 8-365)

Preparation: Disconnect the battery ground cable.

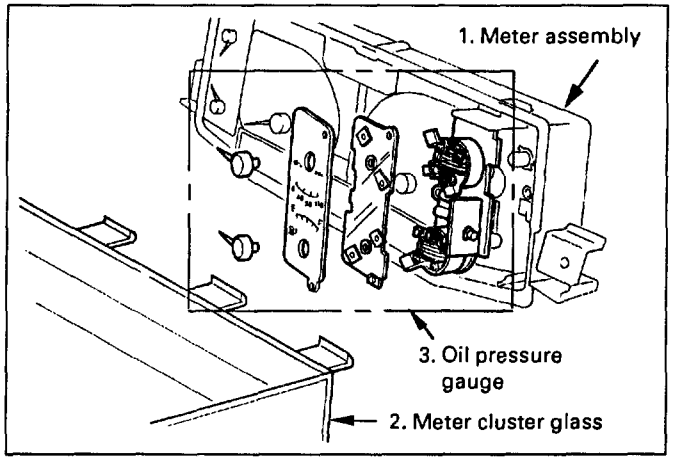

Fig. 8-365

1. **Meter assembly**
2. **Cluster meter glass**
3. **Oil pressure gauge**
   - Remove six screws securing the meter body from the back side, and then remove it together with the fuel gauge. (Fig. 8-366)

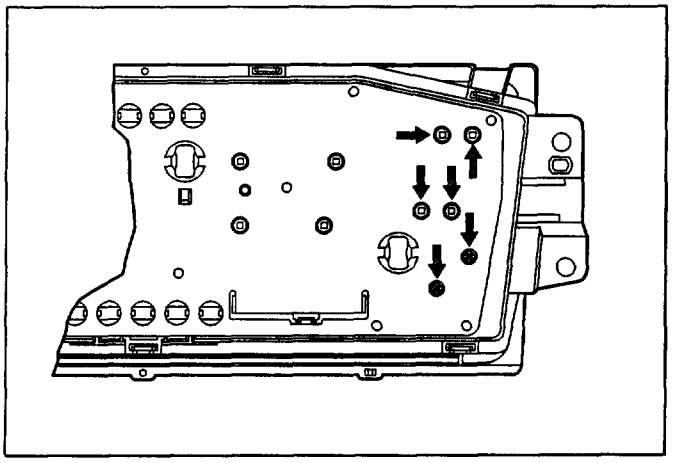

Fig. 8-366

INSTALLATION

To install, follow the removal steps in the reverse order.

FUEL GAUGE

CIRCUIT DIAGRAM OF THE FUEL GAUGE AND LOW FUEL WARNING LIGHT (FIG. 8-367)

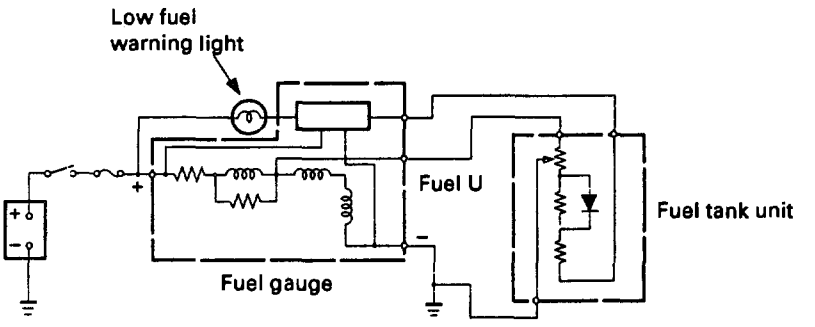

Fig. 8-367

INSPECTION

Remove the fuel gauge from the meter assembly, and measure the resistance value between each terminal. (Fig. 8-368)

Replace the gauge when the result of inspection is found abnormal.

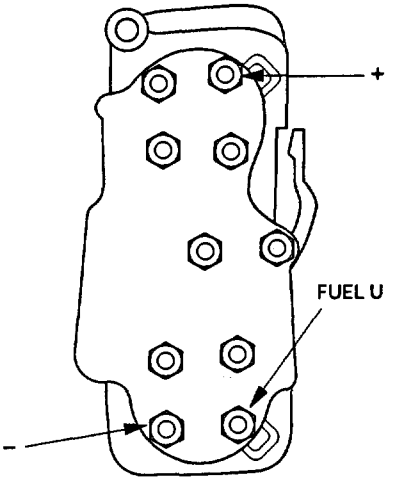

(Ω)

Terminal symbol	Resistance value
(+) - FUEL U	68 ± 6.8
FUEL U - (–)	96 ± 9.6
(+) - (–)	112 ± 11.2

Note: The resistance value between (+) and (–) includes the resistance value for the oil pressure gauge since these terminals are shared with the oil pressure gauge.

Fig. 8-368

REMOVAL AND INSTALLATION

Refer to the removal and installation steps for the oil pressure meter.

A/T INDICATOR LIGHT BULB

REMOVAL

Preparation: Disconnect the battery ground cable.

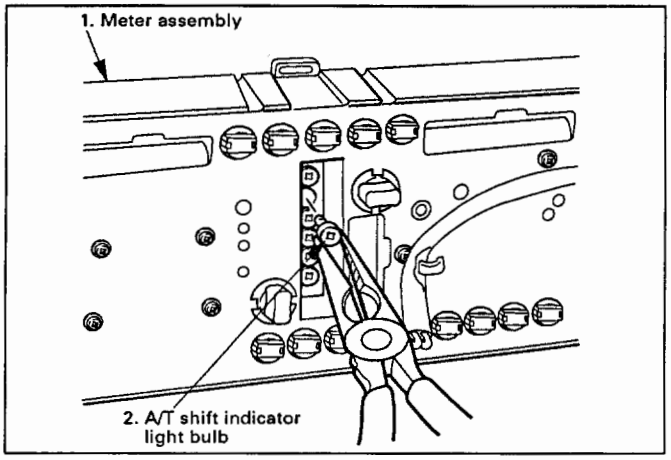

Fig. 8-369

1. **Meter assembly**
   - Refer to the meter assembly removal steps in this section.
2. **A/T shift indicator light bulb**
   - Turn the bulb socket counterclockwise by using the long nose pliers. (Fig. 8-369)

INSTALLATION

To install, follow the removal steps in the reverse order.

WARNING LIGHT BULB, INDICATOR LIGHT BULB, ILLUMINATION LIGHT BULB

REMOVAL (FIG. 8-370)

Preparation: Disconnect the battery ground cable.

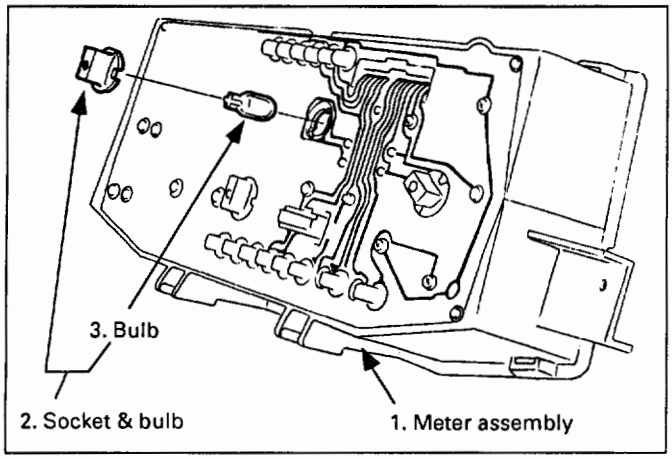

Fig. 8-370

1. **Meter assembly**
   - Refer to the meter assembly removal steps in this section.
2. **Socket and bulb**
   - Hold the bulb socket by hand and rotate it counterclockwise to remove them from the meter body.
3. **Bulb**
   - Pull out the bulb from the socket.

INSTALLATION

To install, follow the removal steps in the reverse order.

VEHICLE SPEED SENSOR (INSTALLED ON THE TRANSMISSION)

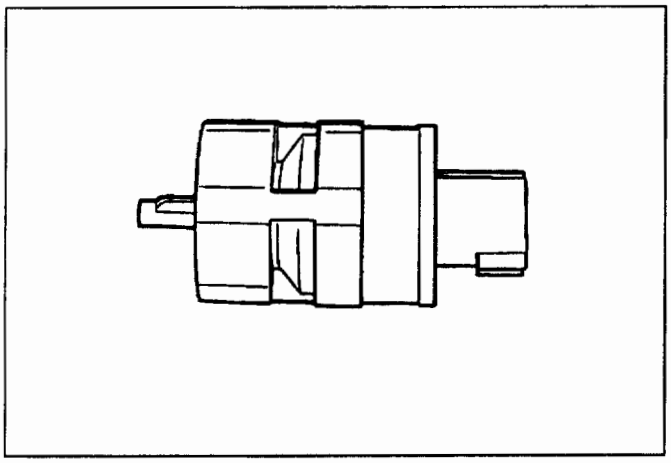

Fig. 8-371

The vehicle speed sensor is installed on the rear portion of the transmission. (Fig. 8-371)
The number of pulses generated is four pulses per one rotation of the pinion shaft.

INSPECTION (FIG. 8-372)

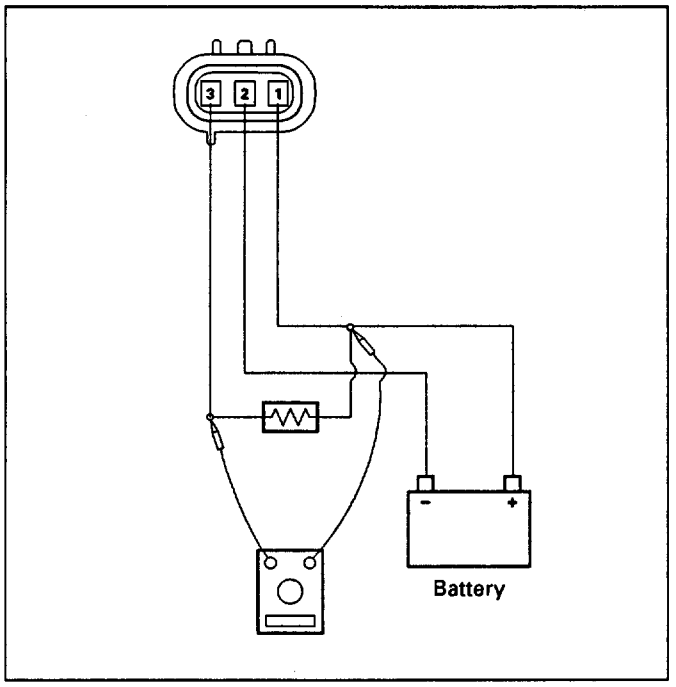

Fig. 8-372

1. Connect the vehicle speed sensor connector 1 M-10 to the battery (+) terminal and 2 M-10 to the (–) terminal.
2. Connect a resistance of 1.3k ohm to 5k ohm (1/4W or more) between connectors 1 M-10 and 3 M-10.

CAUTION: Be extremely careful not to connect the battery (+) terminal to the connector 3 M-10.
This may damage the vehicle speed sensor.

3. Rotate the shaft of the vehicle speed sensor slowly and measure the voltage at both ends with a digital tester.

The voltage, with one rotation of shaft, fluctuates four times in the following range :10 to 14V <—> 2V or less.

Replace the sensor when the result of inspection is found abnormal.

REMOVAL (FIG. 8-373)

Preparation: Disconnect the battery ground cable.

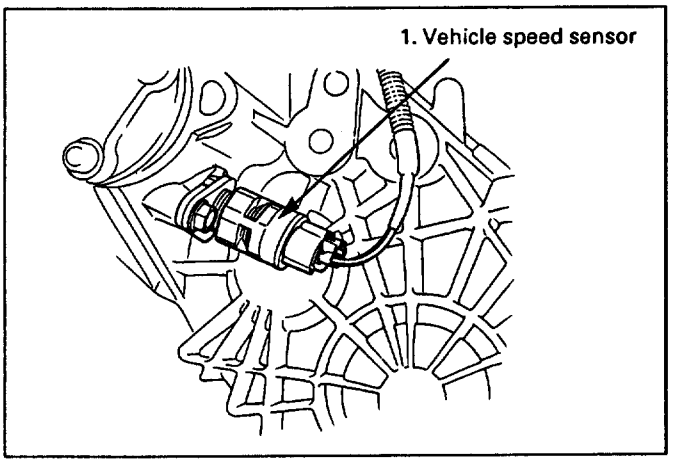

Fig. 8-373

1. Vehicle speed sensor

- Disconnect the connector.
- Remove the vehicle speed sensor body by rotating it.

INSTALLATION

To install, follow the removal steps in the reverse order, noting the following points.

1. Tighten the vehicle speed sensor to the specified torque.

Torque	N·m(lb·ft)	27 (20)

CLUTCH SWITCH

INSPECTION

1. Check continuity between connector terminals. (Fig. 8-374)
2. Check the push rod operation.

Replace the clutch switch when the result of inspection is found abnormal.

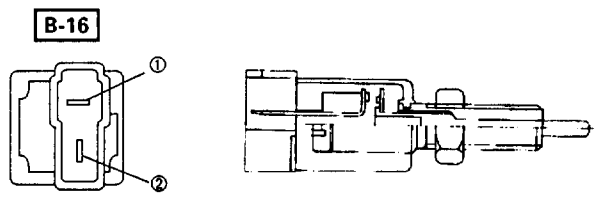

Switch operation \ Terminal No.	1	2
Release clutch pedal (Push rod in)	○	○
Depress clutch pedal (Push rod out)		

Fig. 8-374

TRANSMISSION SWITCH

INSPECTION

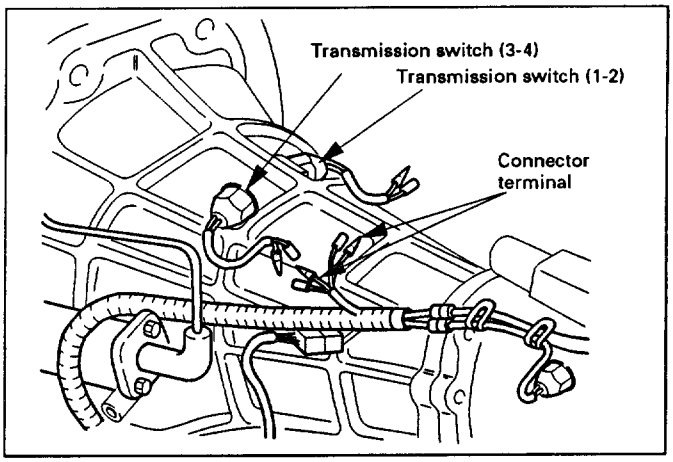

Fig. 8-375

1. Check continuity between connector terminals. (Fig. 8-375)

Replace the clutch switch when the result of inspection is found abnormal.

THERMO UNIT

INSPECTION

Use a circuit tester to measure the thermo unit resistance. (Fig. 8-376)

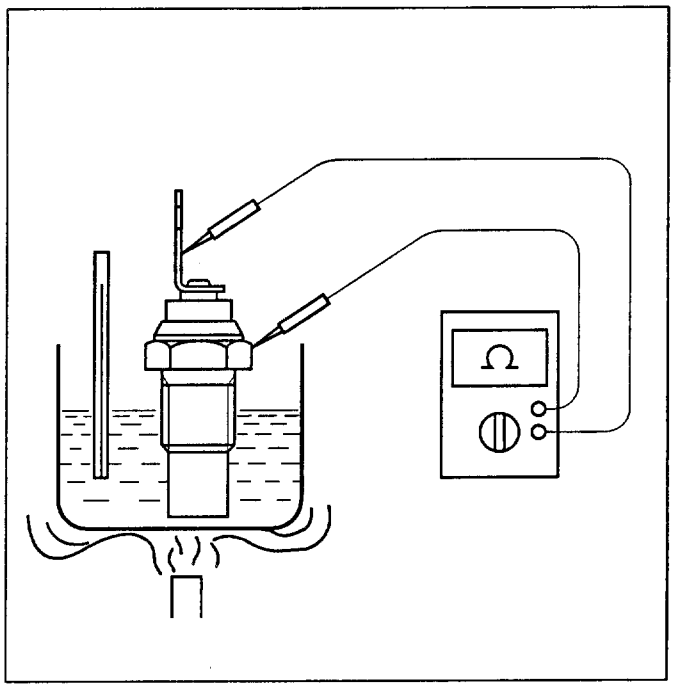

Fig. 8-376

OIL PRESSURE UNIT

INSPECTION

Measure the resistance value of the oil pressure unit with the circuit tester. (Fig. 8-377)
Replace the unit when the result of inspection is found abnormal.

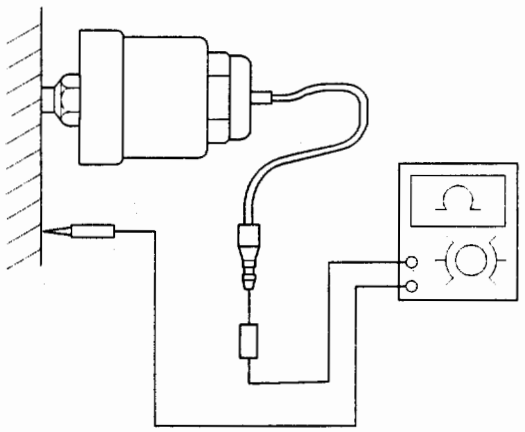

Pressure (kPa)	98	981
Resistance value (Ω)	81	30

Fig. 8-377

OIL PRESSURE SWITCH

INSPECTION

1. Check the continuity between the switch terminal and the body ground with the engine at idle. (Fig. 8-378)
   Replace the switch when the result of inspection is found abnormal.

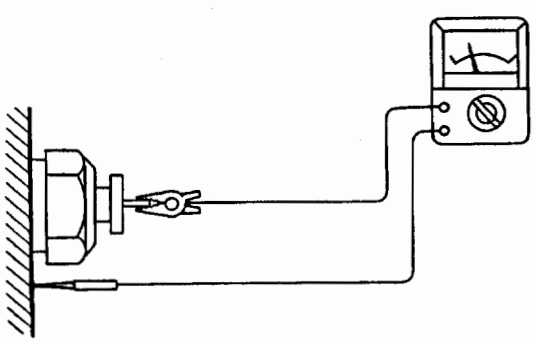

Fig. 8-378

CIRCUIT INSPECTION (FIG. 8-379)

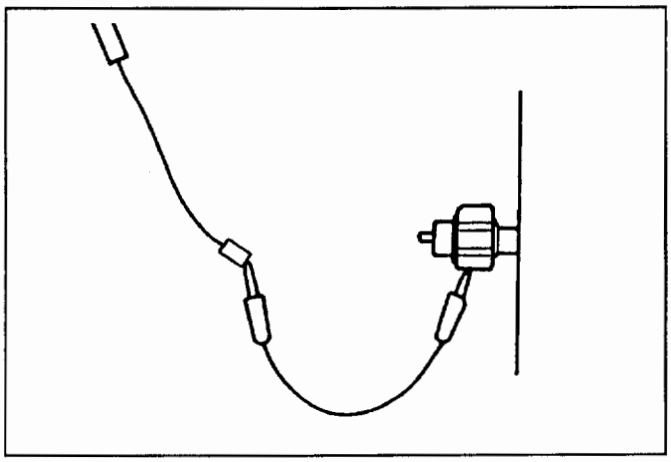

Fig. 8-379

1. Start the engine.
2. When disconnecting the oil pressure switch connector then connecting the harness side connector to the ground, check to see if the oil pressure warning light lights up.
   When the light will not light up, check the circuit between the meter and the oil pressure switch, and repair an open circuit if necessary.

FUEL TANK UNIT

The tank unit varies the internal resistance according to the float position (fluid level) to operate the fuel meter needle.
It is also designed to warn the driver of low fuel level by illuminating the fuel warning light. (Fig. 8-380)

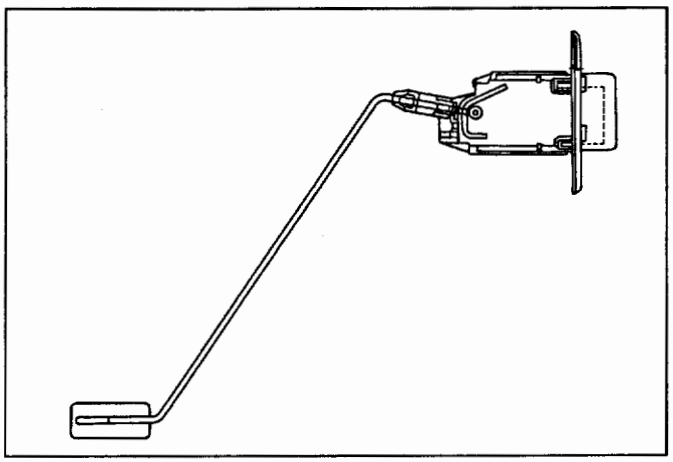

Fig. 8-380

INSPECTION

1. Check the resistance between the connector terminals 1 [F-5] and 2 [F-5] while shifting the float from "E" to "F" point.
   When the resistance shows no change, or deflects largely from the specified value, replace the fuel tank unit. (Fig. 8-381)

NOTE:
When the resistance value at E point is checked, connect the terminal 2 [F-5] to the battery (+) terminal and 1 [F-5] to the battery (–) terminal under the condition that ambient temperature is between 20°C and 30°C (68°F and 86°F).

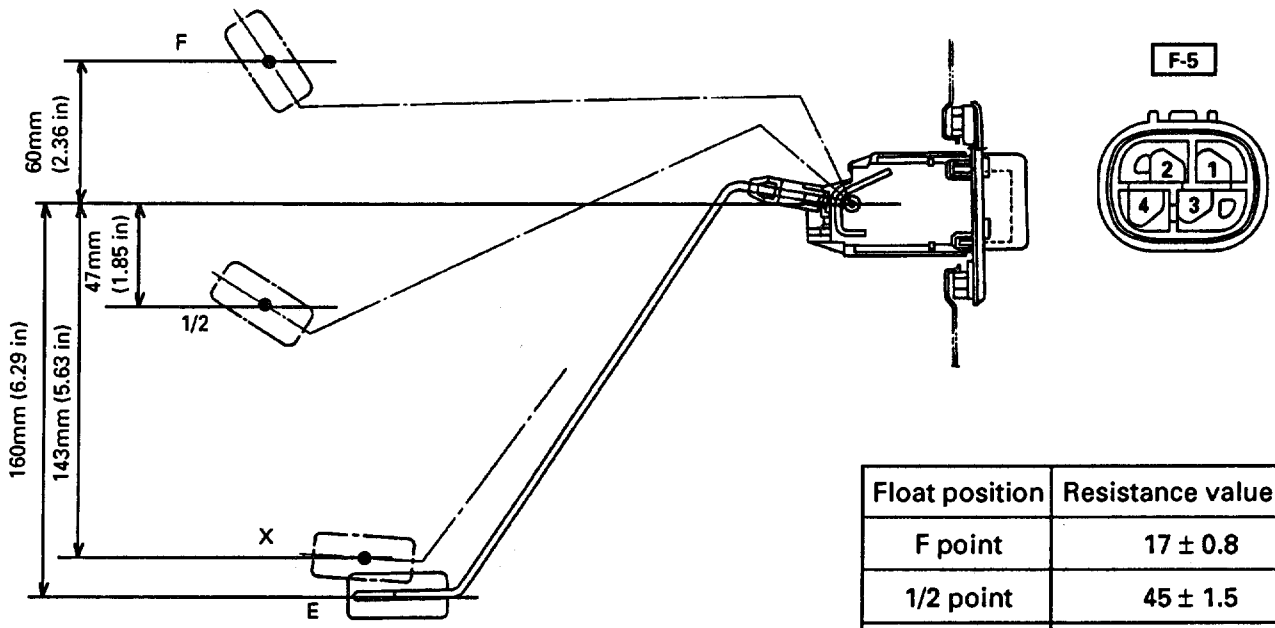

Float position	Resistance value (Ω)
F point	17 ± 0.8
1/2 point	45 ± 1.5
E point	120 ± 5

Fig. 8-381

2. Check the resistance value between the fuel tank unit connector terminals 1 [F-5] and 4 [F-5]. (Fig. 8-382)
   Replace the fuel tank unit when the result of inspection is found abnormal.

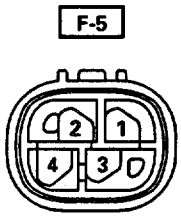

Float position	Terminal No.	Resistance value (Ω)
X point (Light up point of low fuel warning light)	1 – 4	35.9 – 18

Fig. 8-382

REMOVAL (FIG. 8-383)

Preparation: Disconnect the battery ground cable.

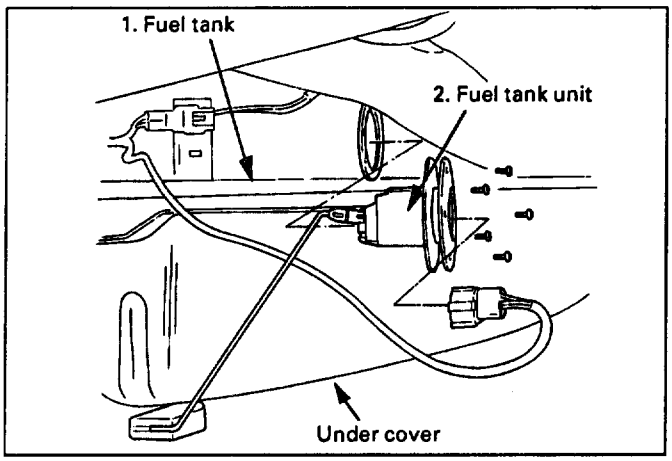

Fig. 8-383

1. **Fuel tank**
   - Refer to fuel tank removal steps in Section 6C "ENGINE FUEL."
2. **Fuel tank unit**
   - Disconnect the connectors.
   - Remove the five screws.

INSTALLATION

To install, follow the removal steps in the reverse order.

BRAKE WARNING LIGHT

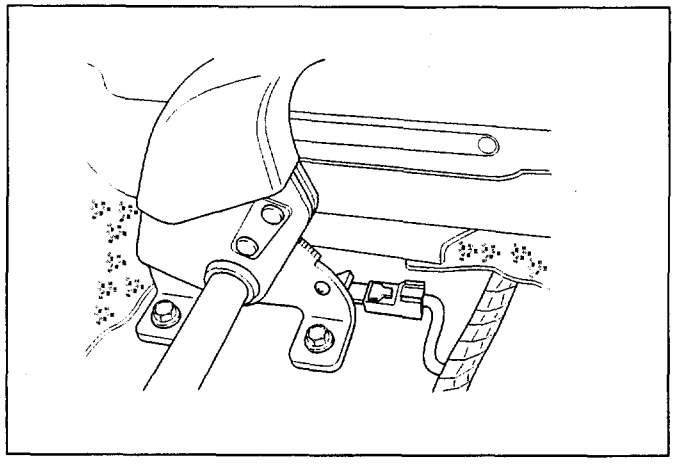

Fig. 8-384

The brake warning light is connected in series with the parking brake switch installed to the parking brake lever bracket. The light comes on when the parking brake lever is pulled, and goes out when the parking brake lever is fully released. (Fig. 8-384)

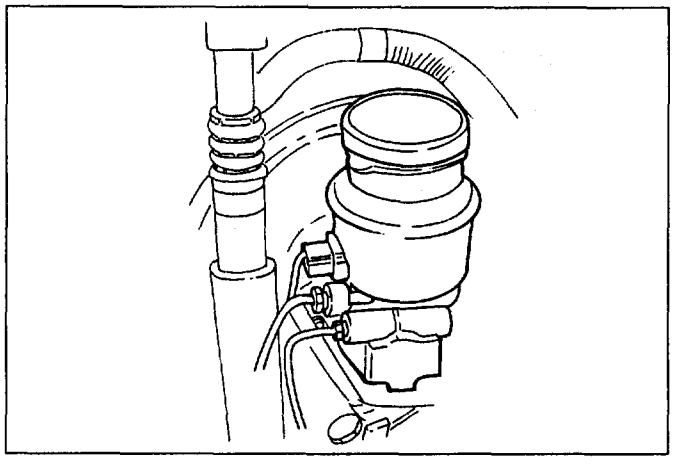

Fig. 8-385

The brake warning light switch, connected in parallel with the brake fluid warning light, is designed to turn on the brake warning light when the brake fluid in the tank gets below the specified level. (Fig. 8-385)

CAUTION:
The parking brake indicator light illuminates to warn the driver that the parking brake is on. This light does not indicate the condition of the operability of the parking brake.

INSPECTION OF THE PARKING BRAKE INDICATOR LIGHT CIRCUIT (FIG. 8-386)

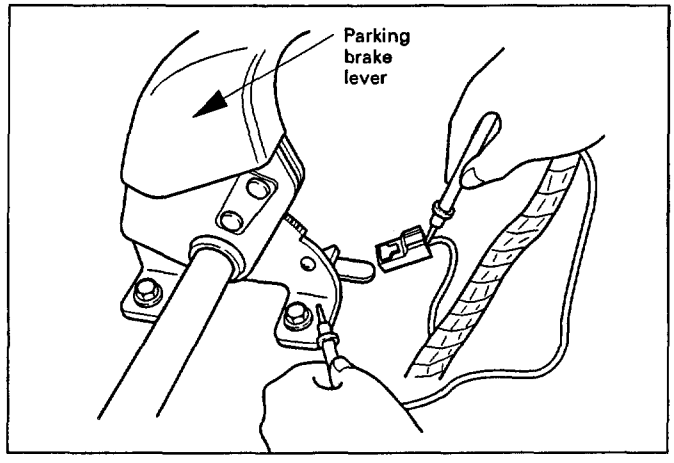

Fig. 8-386

1. Disconnect the parking brake switch connector.
2. Connect the harness side connector to the ground.
3. Check to see if the indicator light comes on with the starter switch "ON".
   Check the bulb or the harness when the result of inspection is found abnormal.

INSPECTION OF THE BRAKE FLUID LEVEL WARNING LIGHT CIRCUIT (FIG. 8-387)

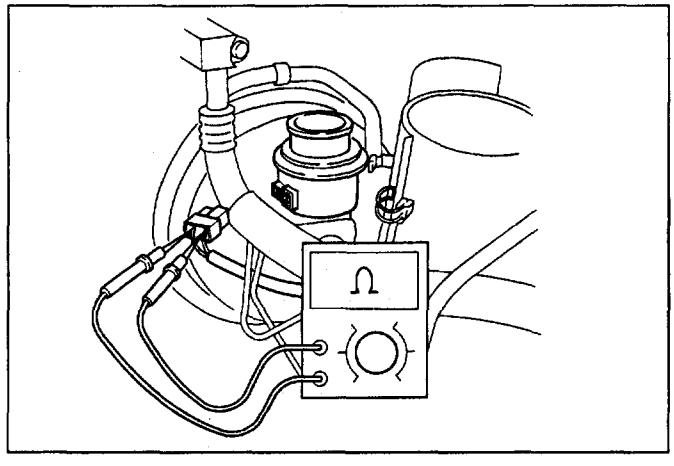

Fig. 8-387

1. Disconnect the brake fluid switch connector.
2. Connect the harness side connector terminals.
3. Check to see if the indicator light comes on with the starter switch "ON".
   Check the bulb or the harness when the result of inspection is found abnormal.

PARKING BRAKE SWITCH

INSPECTION (FIG. 8-388)

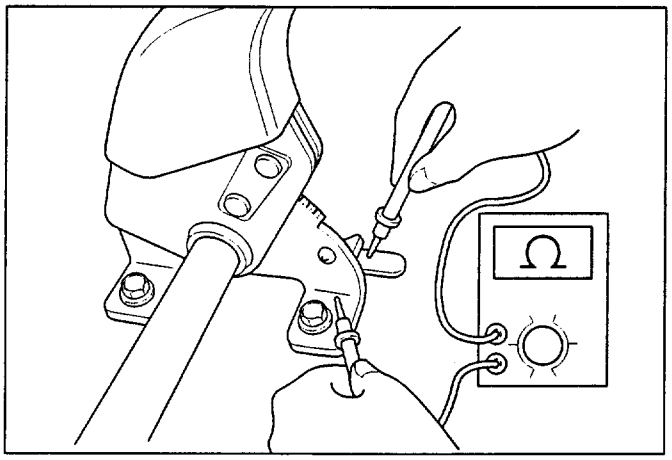

Fig. 8-388

1. Disconnect the parking brake switch connector.
2. Check to see if there is any continuity between the switch terminal and the body ground with the circuit tester connected between them.

When parking brake on	Continuity
When parking brake off	No continuity

Repair the parking switch or replace it when the result of inspection is found abnormal.

BRAKE FLUID SWITCH

INSPECTION (FIG. 8-389)

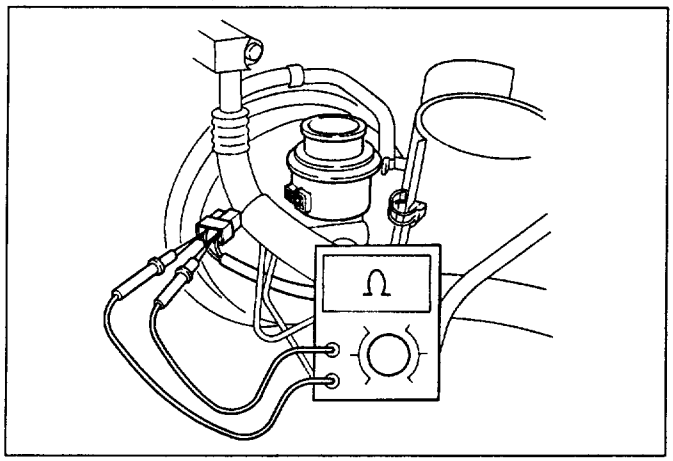

Fig. 8-389

1. Disconnect the brake fluid switch connector.
2. Check to see if there is any continuity between the connector terminals with the circuit tester connected to each of them.

When float is up . . . . . No continuity
(With brake fluid within the specified level)
When float is down. . . . . Continuity
(With brake fluid below the specified level)

Repair or replace the brake fluid tank when the result of inspection is found abnormal.

UPSHIFT-1 RELAY

INSPECTION

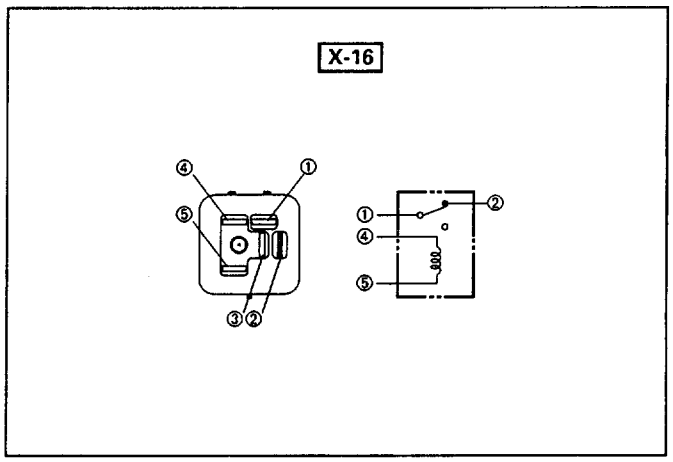

Fig. 8-390

Check to see if there is continuity between the relay terminals. (Fig. 8-390)
Replace the relay when the result of inspection is found abnormal.

①–②. . . . . Continuity

(When the battery voltage is applied between ④–⑤)

①–②. . . . . No Continuity

MEMO

A/T SHIFT INDICATOR

GENERAL DESCRIPTION

The circuit consists of the starter switch, lighting switch, mode switch, A/T shift indicator control unit and A/T shift indicator (meter).

PARTS LOCATION

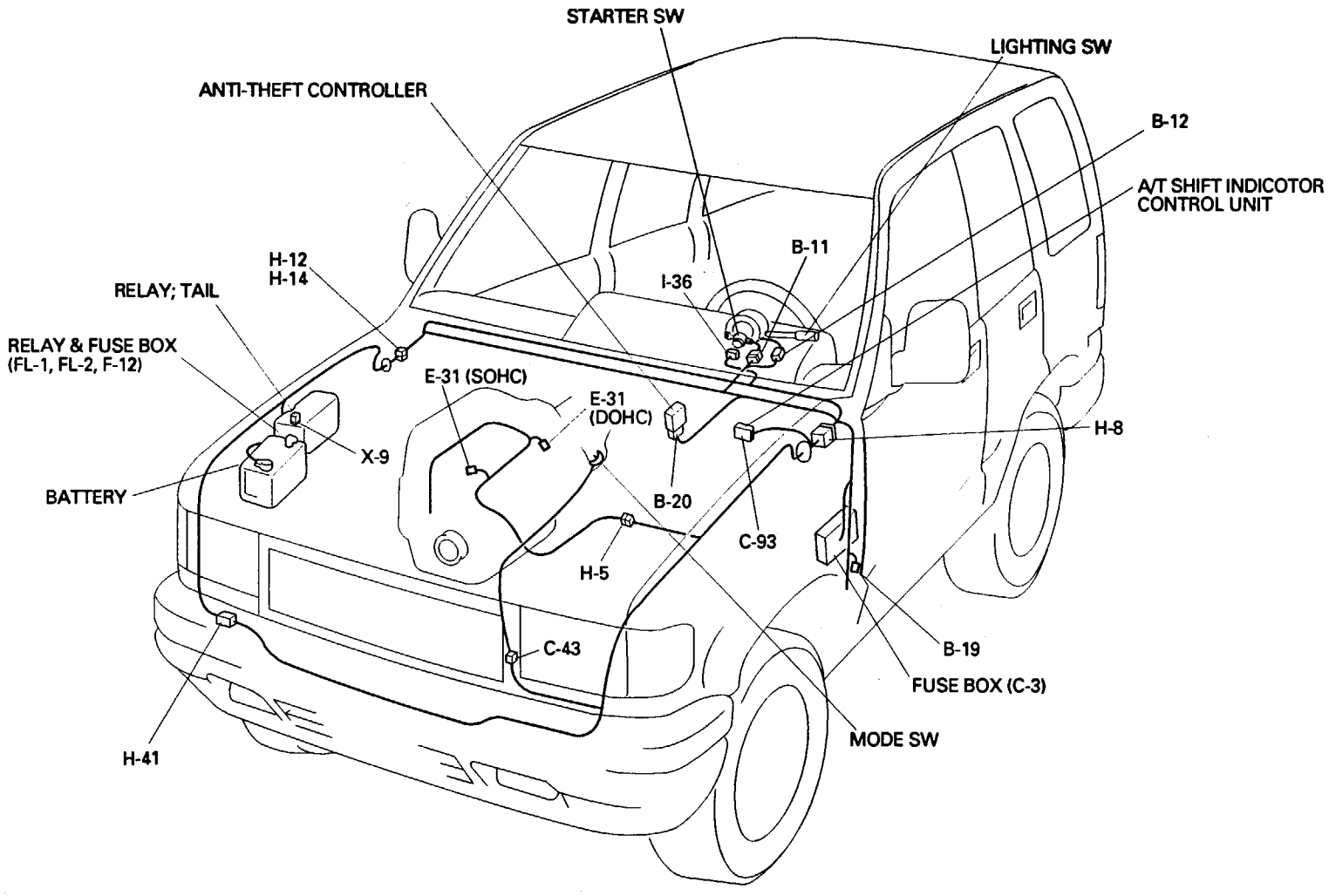

Fig. 8-391

CIRCUIT DIAGRAM

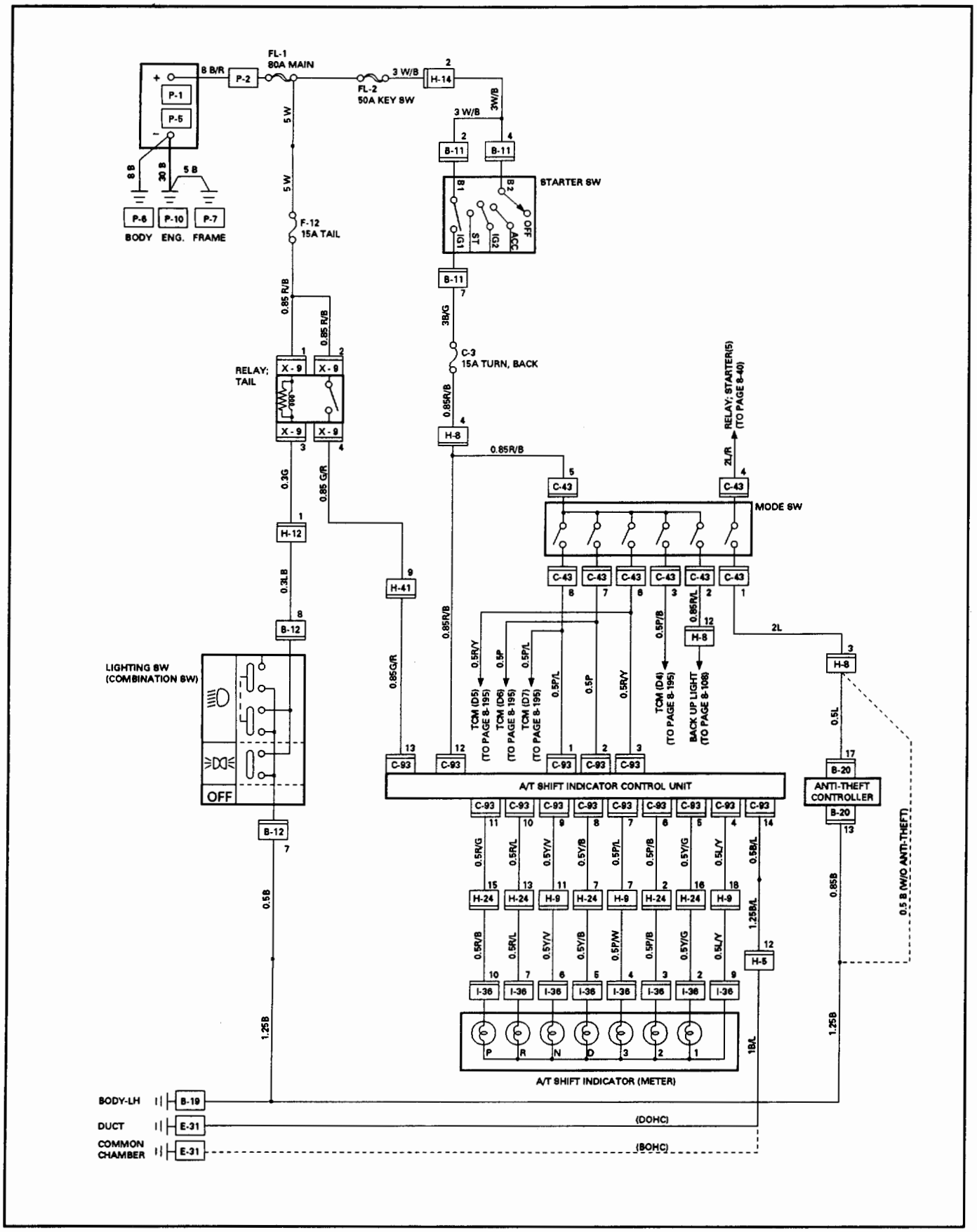

Fig. 8-392

PARTS LOCATION

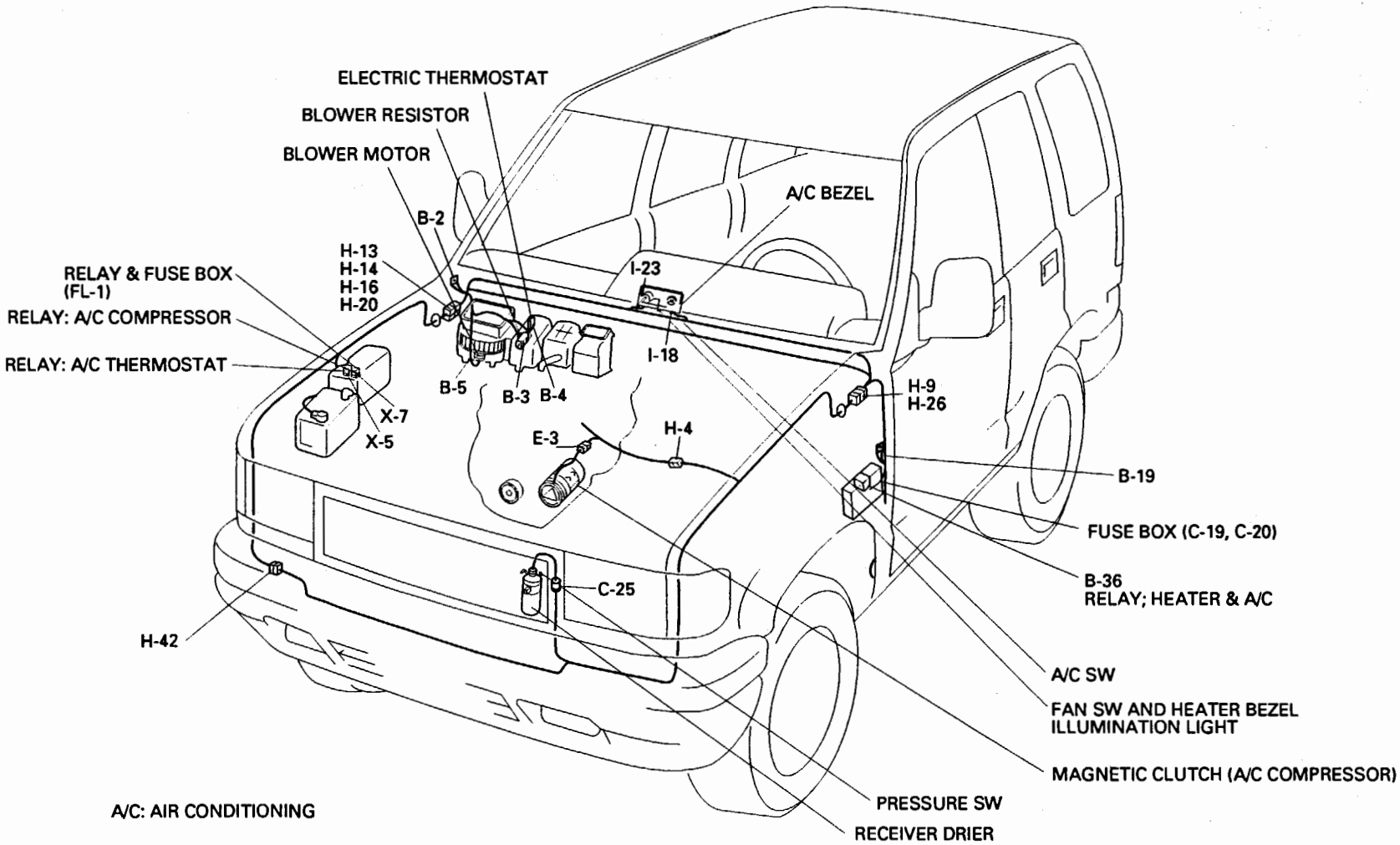

A/C: AIR CONDITIONING

Fig. 8-395

CIRCUIT DIAGRAM

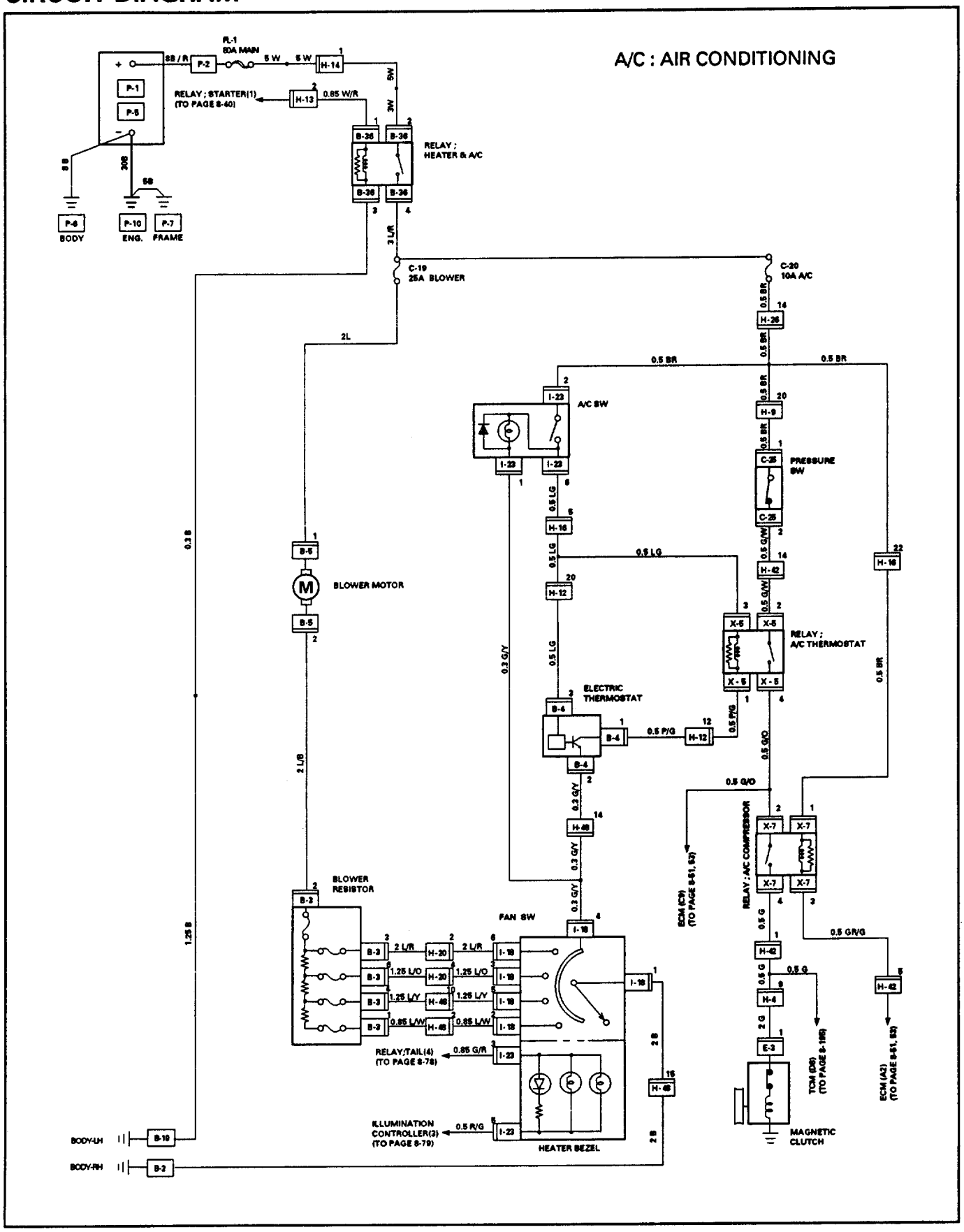

Fig. 8-396

CONNECTOR LIST

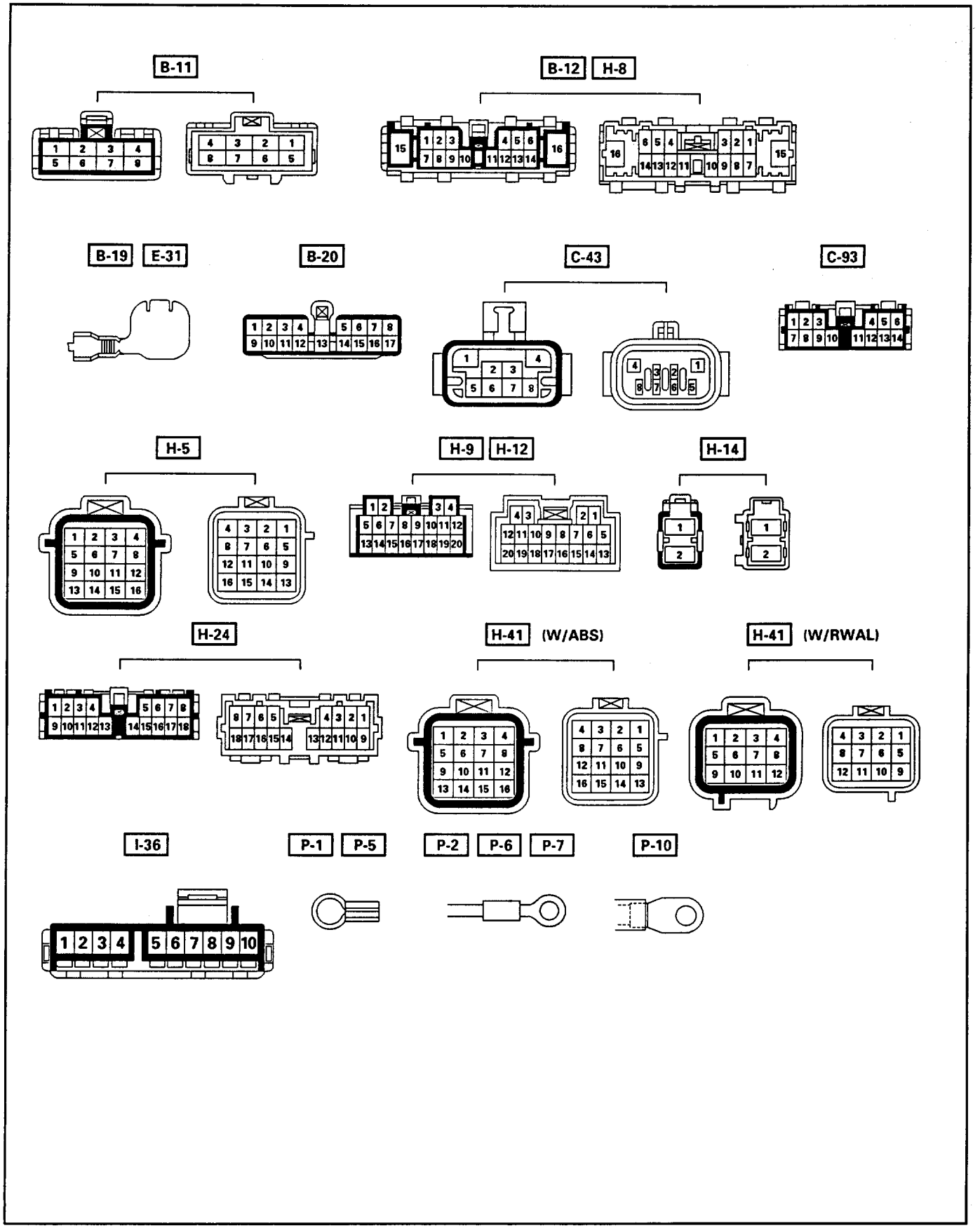

Fig. 8-393

HEATER AND AIR CONDITIONING

GENERAL DESCRIPTION

The circuit consists of the pressure switch, A/C switch, electric thermostat, blower motor, fan switch, magnet clutch of the A/C compressor, blower resistor and relay.

The start and stop of the A/C is controlled by turning the A/C switch on and off. The electric thermostat and the ECM can stop the operation of the A/C temporarily by disconnecting the magnet clutch under the predetermined conditions to adjust the room temperature, preventing the abnormal rise of the engine coolant and reduce the engine load while the A/C is in operation.

Refer to Section 1B "AIR CONDITIONING" for detail.

OPERATING CONDITIONS OF A/C COMPRESSOR (MAGNETIC CLUTCH)

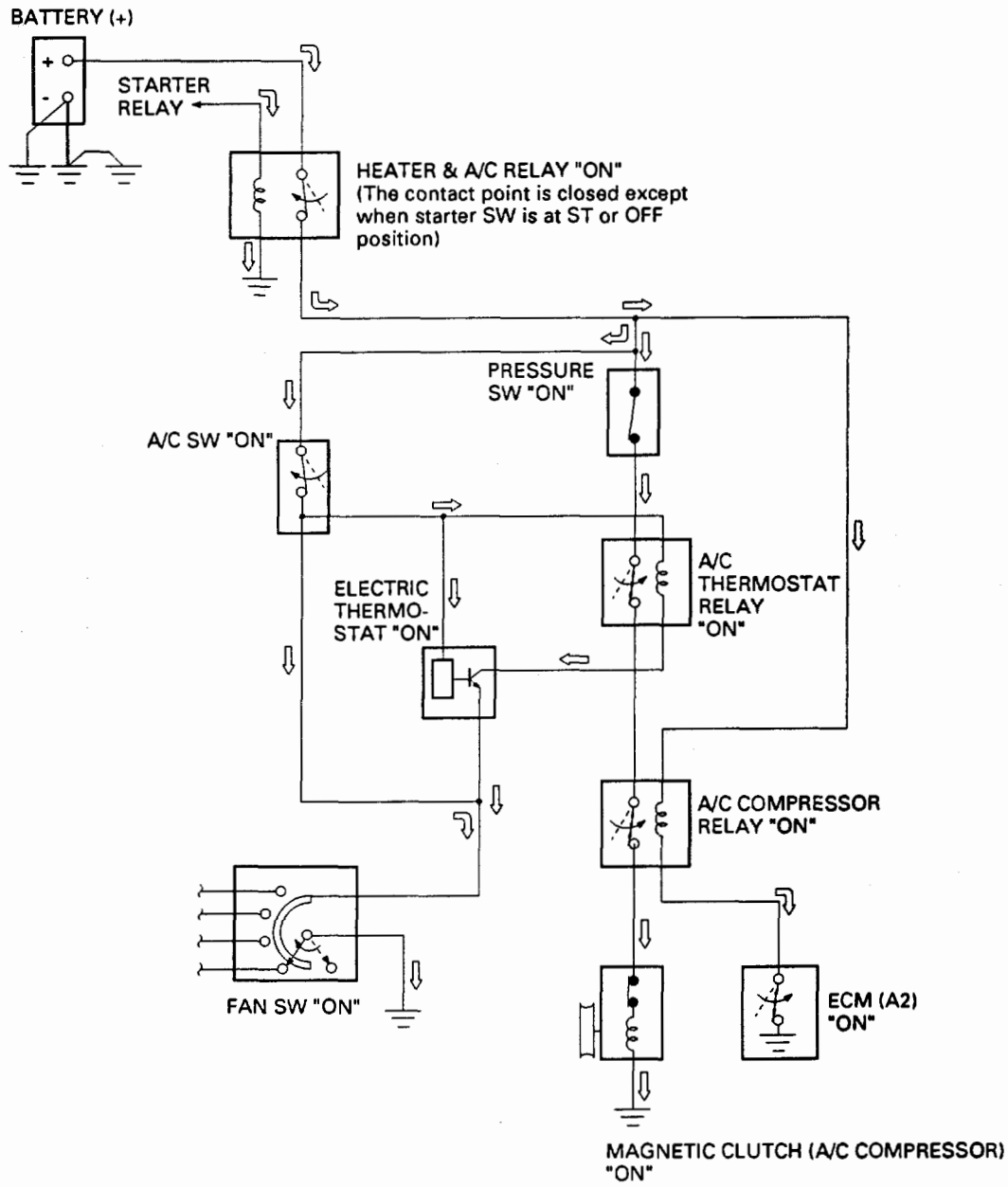

NOTE: Arrow marks " ⇨ " indicate the direction of current

Fig. 8-394

CONNECTOR LIST

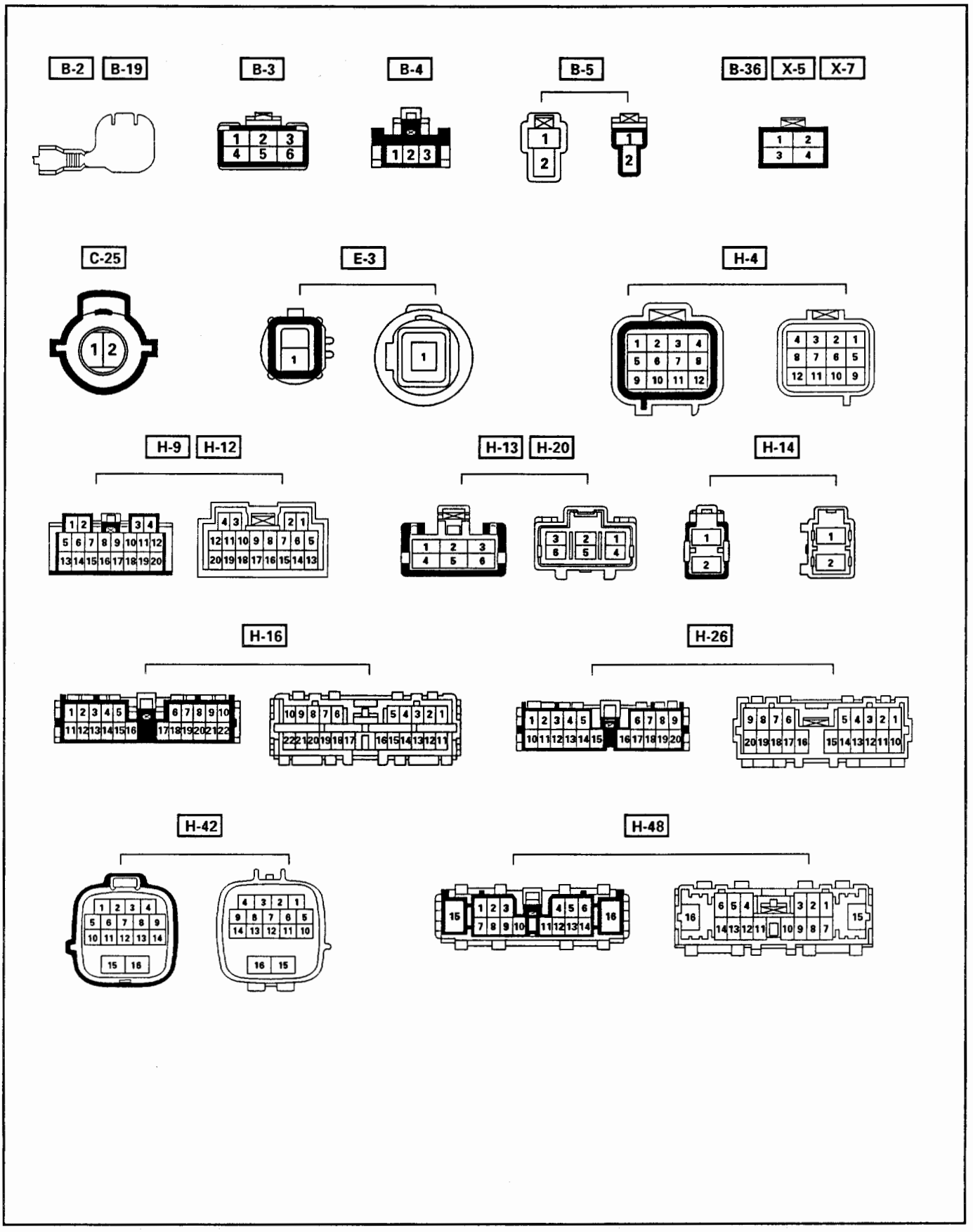

Fig. 8-397

CONNECTOR LIST

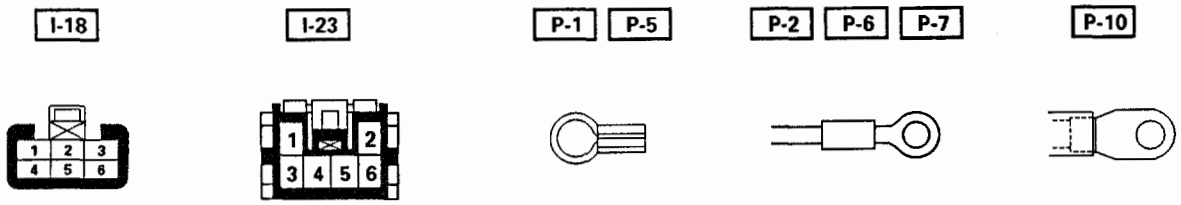

Fig. 8-398

MEMO

SUN ROOF

GENERAL DESCRIPTION

The circuit consists of the starter switch, sun roof switch, sun roof control unit, safety stop switch, limit switch, and sun roof motor.
When the sun roof switch is turned on, the battery voltage is applied to the sun roof control unit through the circuit breaker and the power window relay on the circuit.
Accordingly, when the sun roof switch is set to "Open" or "Close" position, the open or close relay incorporated into the control unit is activated to change the rotational direction of the sun roof motor to open or close the sun roof.
Also, the operational process (full close —> limit stop —> full open —> safety stop —> full close) of the sun roof is controlled by the control unit in accordance with signals received from the safety stop switch and limit switch.

OPERATION OF SUN ROOF

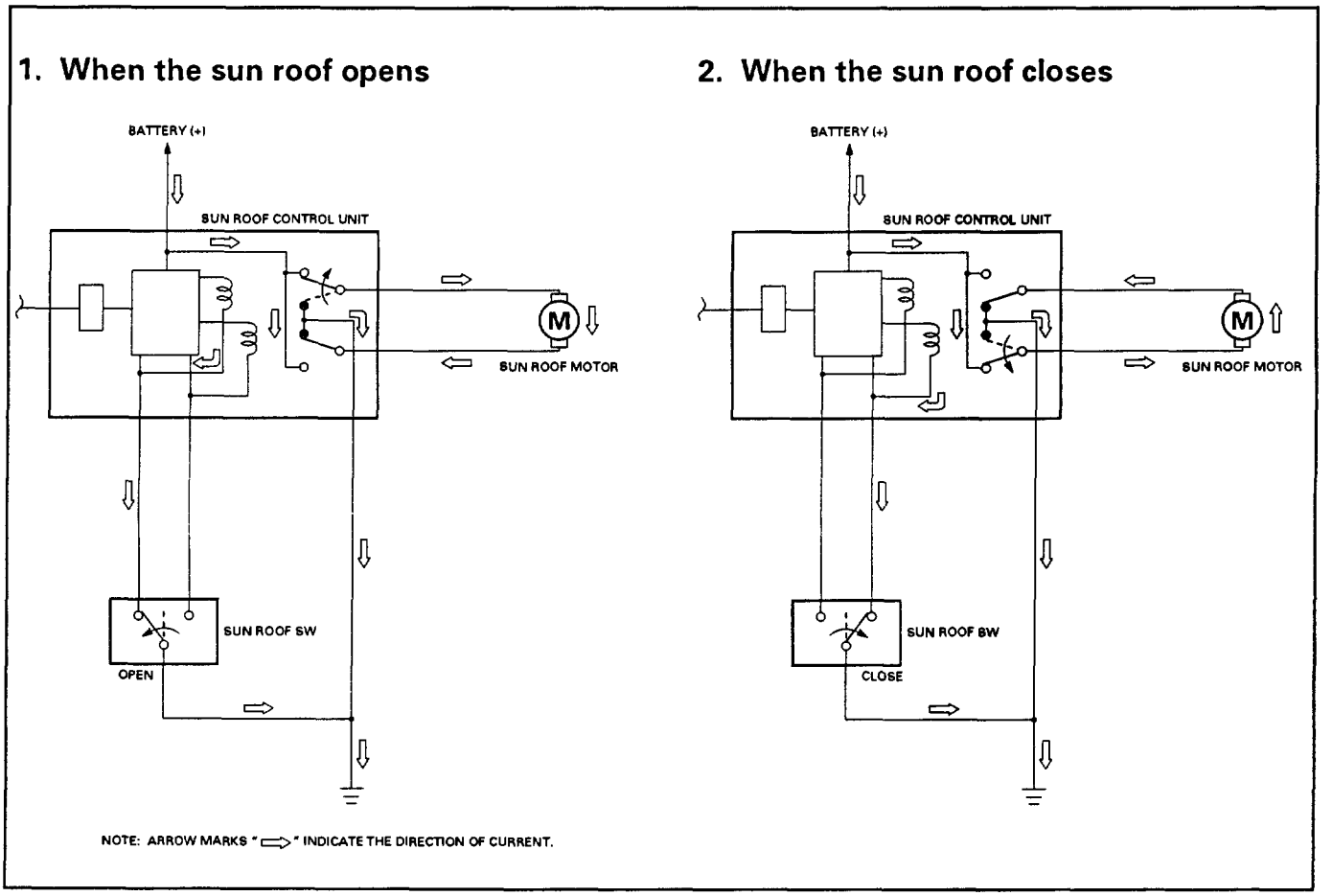

Fig. 8-399

PARTS LOCATION

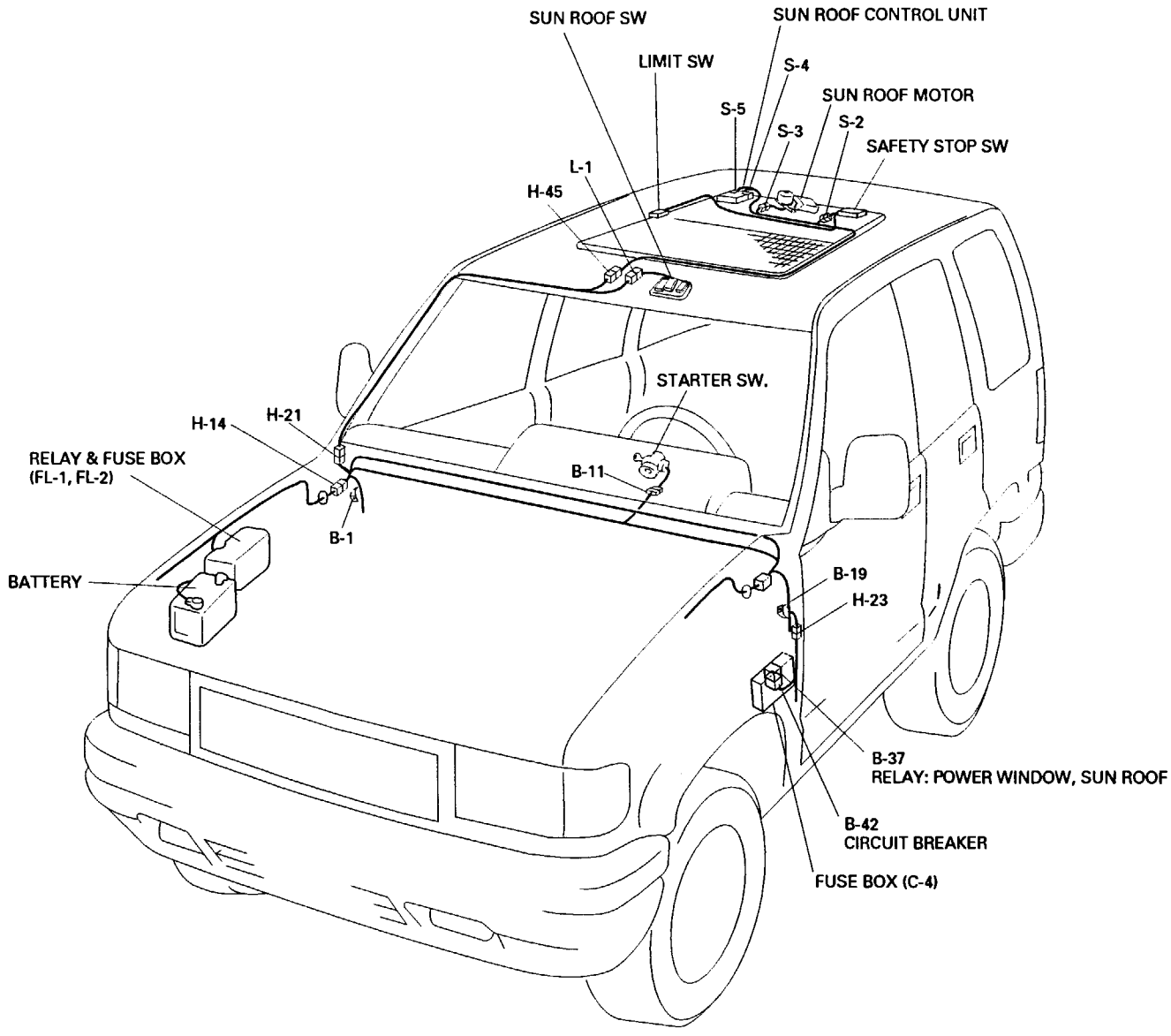

Fig. 8-400

CIRCUIT DIAGRAM

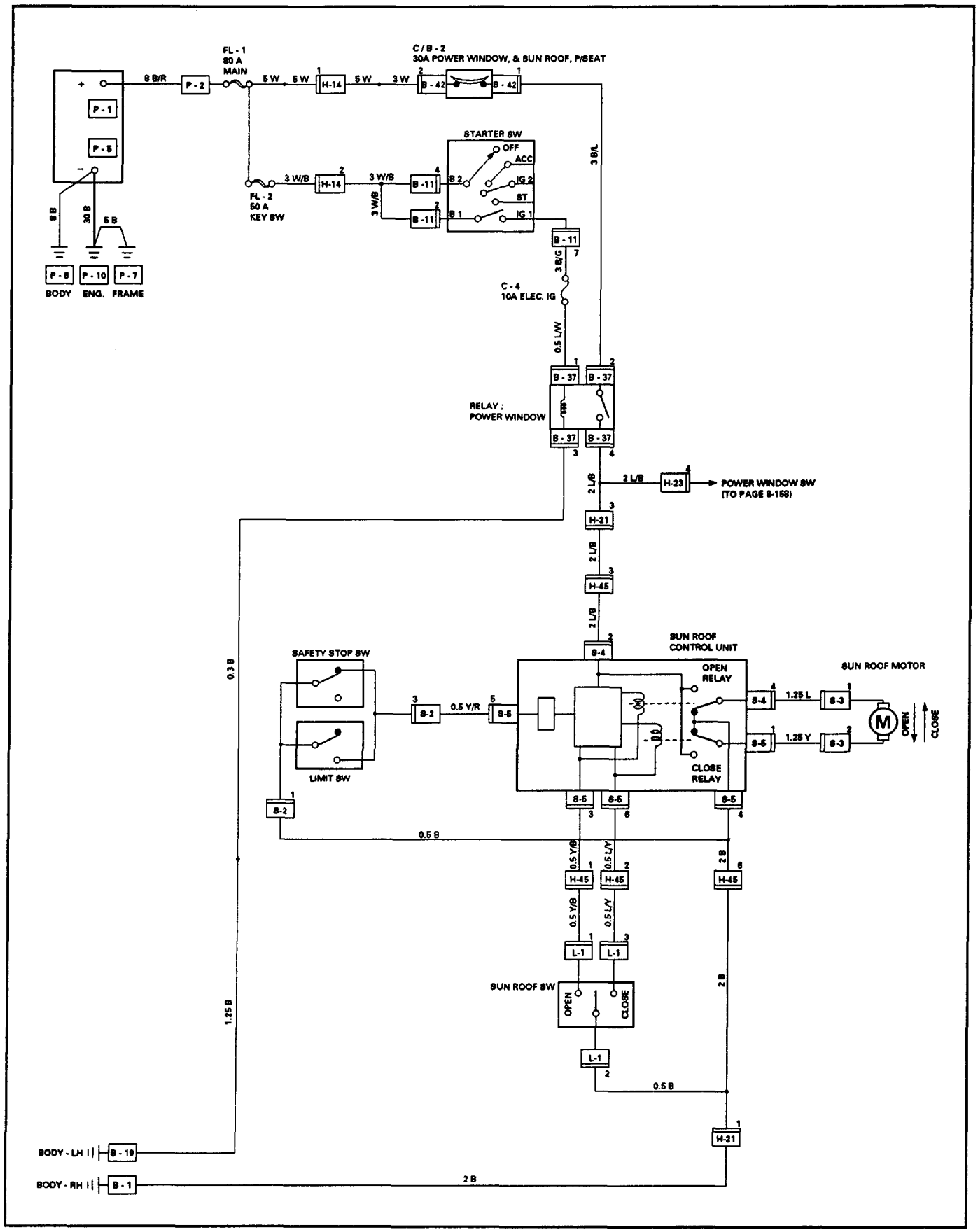

Fig. 8-401

CONNECTOR LIST

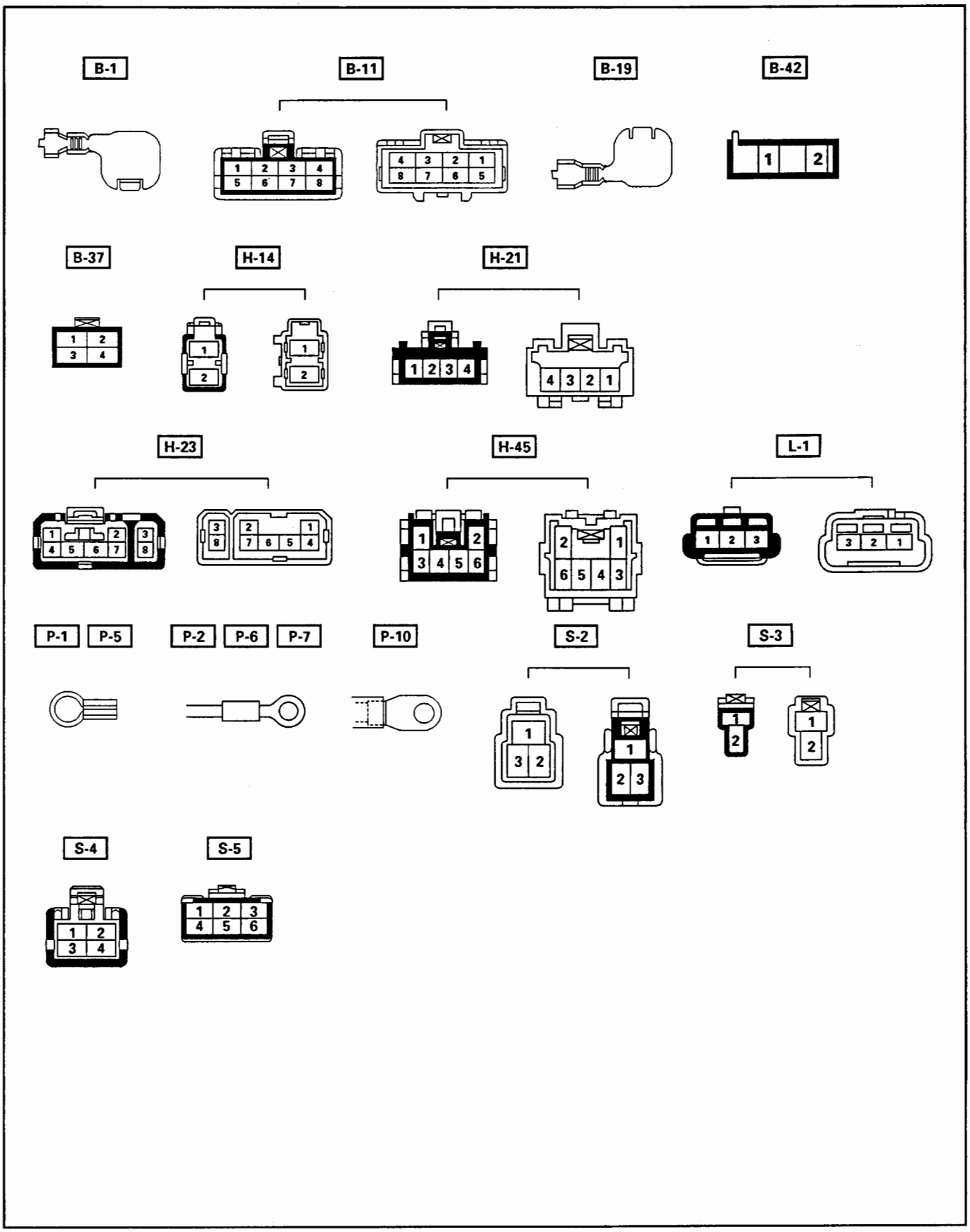

Fig. 8-402

DIAGNOSIS

QUICK CHART FOR CHECK POINTS

Trouble mode \ Check point	C/B-2 (30A)	Fuse C-4 (10A)	Power window relay	Sun roof switch	Sun roof control unit	Sun roof motor	Safety stop switch	Limit switch	Cable harness
1. Sun roof does not open				○ (2)	○ (4)	○ (3)			○ (1)
2. Sun roof does not close				○ (2)	○ (4)	○ (3)			○ (1)
3. Safety stop mechanism does not operate before sun roof closes completely					○ (3)		○ (1)		○ (2)
4. Limit switch mechanism does not operate before sun roof open completely					○ (3)			○ (1)	○ (2)
5. power source circuit diagnosis	○ (1)	○ (2)	○ (3)						○ (4)

NOTE: Figure in parenthesis "( )" indication the order of inspection.

1. SUN ROOF DOES NOT OPEN
2. SUN ROOF DOES NOT CLOSE

- TURN THE STARTER SWITCH ON
- IS BATTERY VOLTAGE APPLIED BETWEEN 2 [S-4] AND THE GROUND?

YES

- IS [B-1] GROUNDED SECURELY?

NO

REFER TO ITEM No. 5 "POWER SOURCE CIRCUIT DIAGNOSIS" IN THIS DIAGNOSIS

YES

- IS THE SUN ROOF SWITCH NORMAL?

NO

GROUND IT SECURELY

YES

- IS THERE ANY CONTINUITY BETWEEN 3 [S-5] - 1 [L-1] (6 [S-5] - 3 [L-1])?

NO

REPAIR OR REPLACE THE SWITCH

YES

- IS THERE ANY CONTINUITY BETWEEN 2 [L-1] - [B-1] ?

NO

REPAIR A POOR CONNECTION OF THE CONNECTORS OR AN OPEN CIRCUIT IN THE CIRCUIT

YES

- CONNECT THE BATTERY (+) TERMINAL TO THE SUN ROOF MOTOR SIDE CONNECTOR TERMINAL 1 [S-3] (2 [S-3]) AND THE (–) TERMINAL TO 2 [S-3] (1 [S-3])
- DOES THE MOTOR ROTATE?

NO

REPAIR A POOR CONNECTION OF THE CONNECTORS OR AN OPEN CIRCUIT IN THE CIRCUIT

YES

- IS THERE ANY CONTINUITY BETWEEN THE HARNESS SIDE CONNECTOR TERMINALS 1 [S-3] - 2 [S-3] ?

NO

REPAIR OR REPLACE THE MOTOR

YES

- IS THERE ANY CONTINUITY BETWEEN 4 [S-5] - [B-1] ?

NO

REPAIR A POOR CONNECTION OF THE CONNECTORS OR AN OPEN CIRCUIT IN THE CIRCUIT

(A)

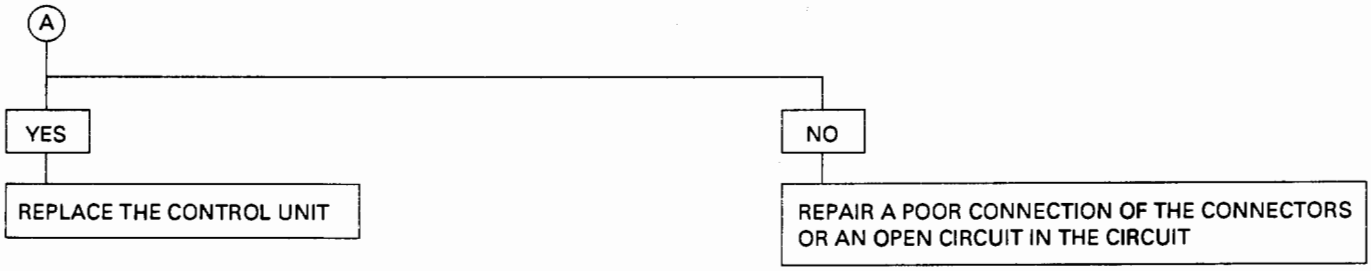

3. SAFETY STOP MECHANISM DOES NOT OPERATE BEFORE SUN ROOF CLOSES COMPLETELY

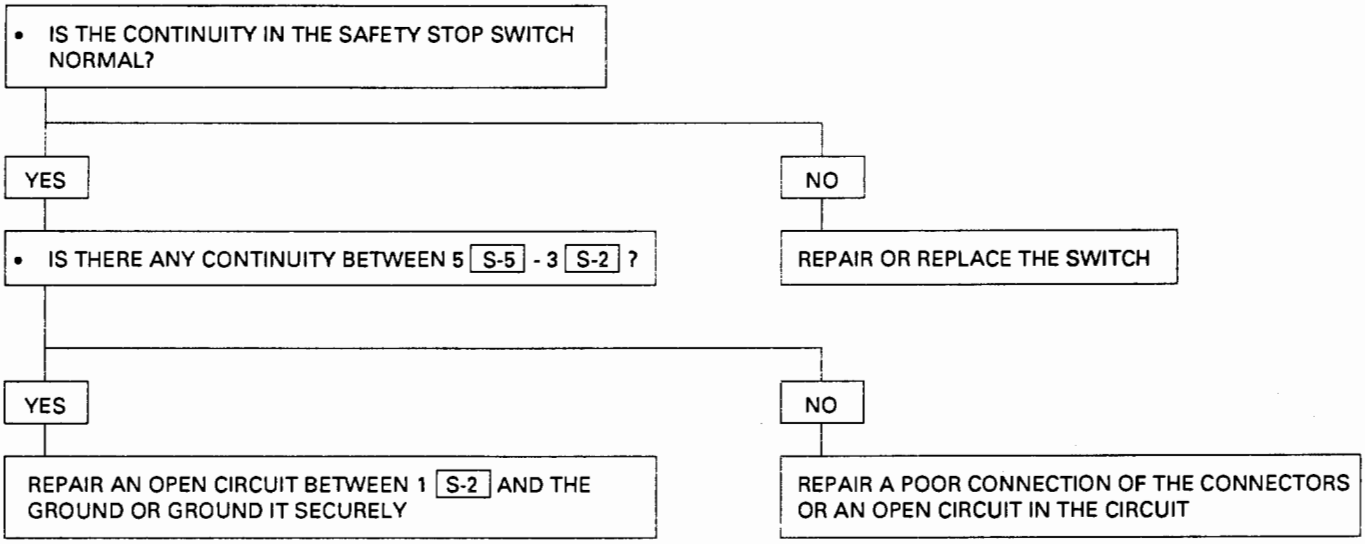

4. LIMIT SWITCH MECHANISM DOES NOT OPERATE BEFORE SUN ROOF OPEN COMPLETELY

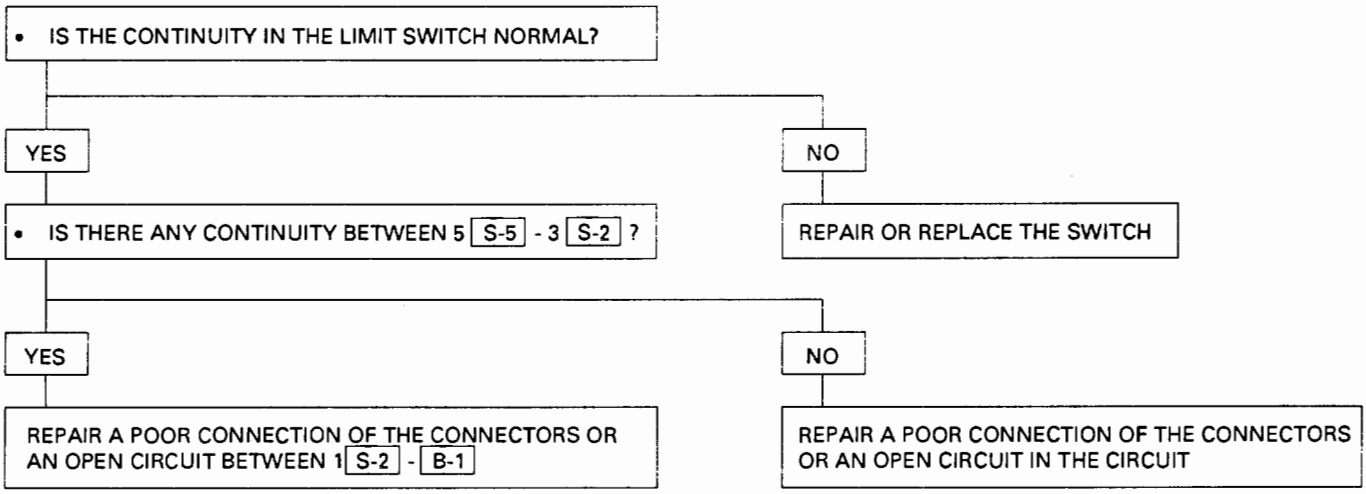

5. POWER SOURCE CIRCUIT DIAGNOSIS

- IS THERE ANY CONTINUITY BETWEEN THE TERMINALS OF C/B-2 (30A)?

YES

- IS FUSE C-4 (10A) NORMAL?

NO

PUSH IN THE RESET BUTTON OF CIRCUIT BREAKER AND CHECK THE CONTINUITY AGAIN.
IF THERE IS NO CONTINUITY AFTER PUSHING RESET BUTTON, REPLACE IT WITH NEW ONE.

YES

- IS THE POWER WINDOW RELAY NORMAL?

NO

REPLACE THE FUSE

YES

- TURN THE STARTER SWITCH ON
- IS BATTERY VOLTAGE APPLIED BETWEEN 1 [B-37] AND THE GROUND, 2 [B-37] AND THE GROUND?

NO

REPLACE THE RELAY

YES

- IS [B-19] GROUNDED SECURELY?

NO

REPAIR A POOR CONNECTION OF THE CONNECTORS OR AN OPEN CIRCUIT BETWEEN FUSE C-4 (10A) - 1 [B-37] OR 1 [H-14] - 2 [B-37]

YES

REPAIR A POOR CONNECTION OF THE CONNECTORS OR AN OPEN CIRCUIT BETWEEN 3 [B-37] - [B-19]

NO

GROUND IT SECURELY

STARTER SWITCH

Refer to "Start and Charging" in this section.

SUN ROOF HARNESS

INSPECTION

Check continuity between the harness side connector terminals. (Fig. 8-403)
When there is no continuity, check the harness cable between the connectors.

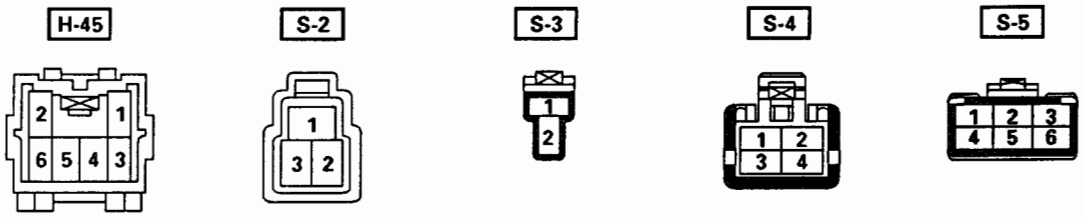

Connector No.	H-45		S-2	S-3		S-4		S-5				
Terminal No.	3	6	1	1	2	2	4	1	3	4	5	6
Check point or condition / Wire color	L/B	B	Y/R	L	Y	L/B	L	Y	Y/B	B	Y/R	L/Y
Power circuit	○	○				○				○		
Sun roof switch at OPEN position									○	○		
Sun roof switch at CLOSE position										○		○
Sun roof closes completely			○								○	
Circuit between the motor and the control unit				○			○					
					○			○				
							○	○				

Fig. 8-403

SUN ROOF OPERATION TIMING CHART (FIG. 8-404)

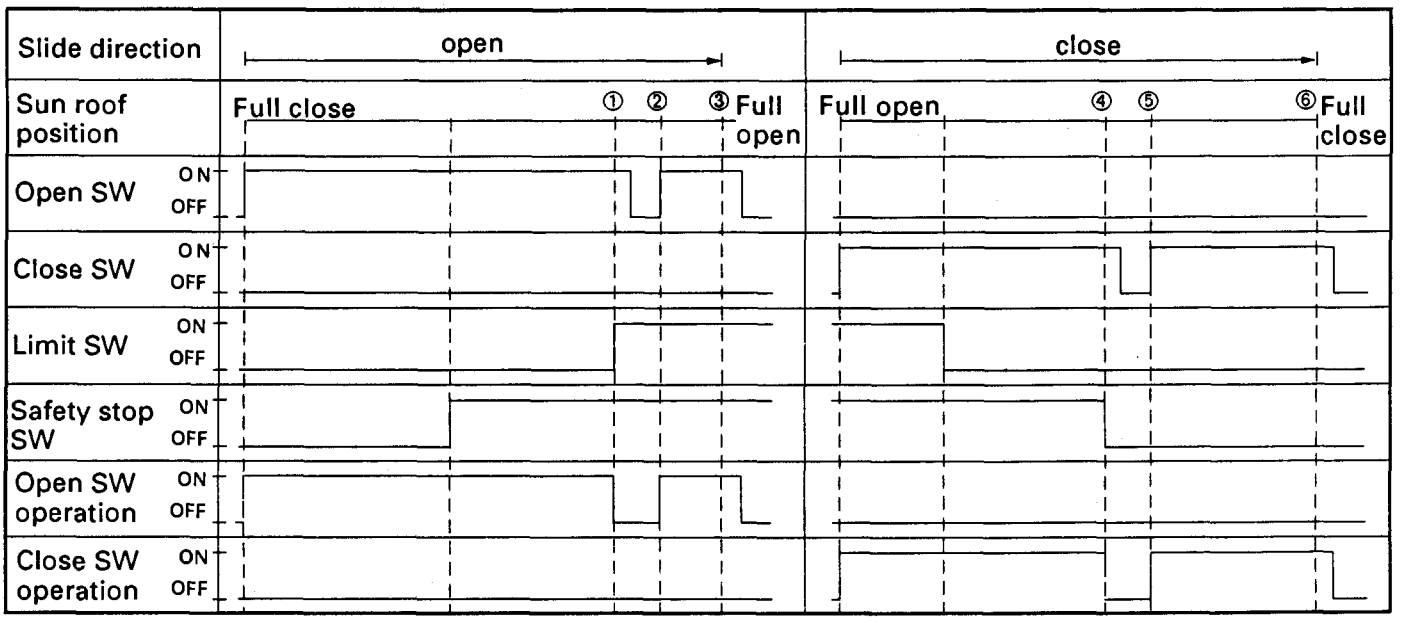

Fig. 8-404

NOTE:

① Sun roof stop: Before 165mm of fully open position.
② Open switch push again.
③ Fully open position: Sun roof motor Stop by open switch OFF.
④ Sun roof stop: Before 180mm of fully close position.
⑤ Close switch push again.
⑥ Fully close position: Sun roof motor stop by close switch OFF.

SUN ROOF SWITCH

Sun roof operation can be controlled by pushing continuously the sun roof switch to activate the sun roof control unit and sun roof motor.
While the switch is being pushed to the "OPEN" side, the sun roof stops about 165mm (6.5in) before fully open position. Push the switch again to the "OPEN" side to open it fully. When the switch is being continuously pushed to the "CLOSE" side, the sun roof stops about 180mm (7.1 in) short of the fully closed position and remains in this state. Push the switch again to the "CLOSE" side to close it completely.

INSPECTION

Check the continuity between the switch connector terminals. (Fig. 8-405)
When there is no continuity, repair or replace the sun roof switch.

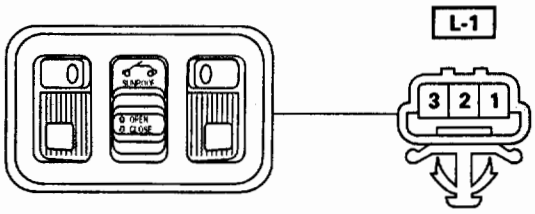

SW position \ Terminal No.	1	2	3
OPEN	○	○	
CLOSE		○	○

Fig. 8-405

REMOVAL

Preparation: Disconnect the battery ground cable.

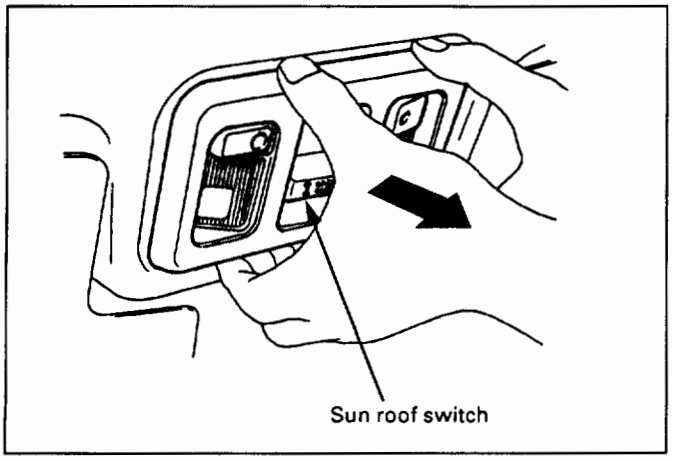

Fig. 8-406

1. **SUN ROOF SWITCH**
   - Pull down the switch housing. (Fig. 8-406)
   - Disconnect the harness connectors of the sun roof.
   - Disconnect the harness connectors of the map light.

INSTALLATION

To install, follow the removal steps in the reverse order.

SUN ROOF CONTROL UNIT

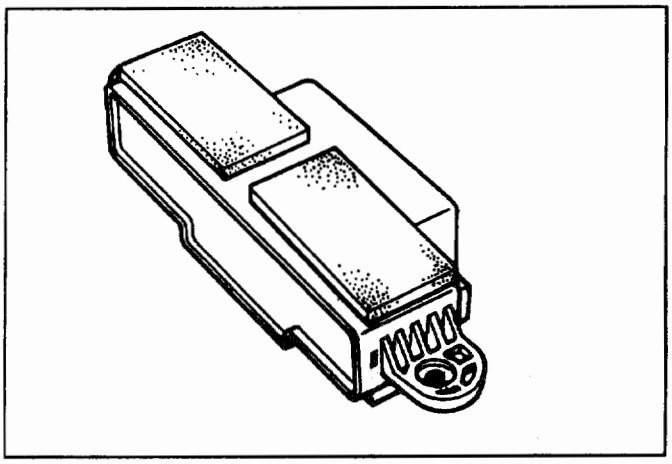

Fig. 8-407

When the sun roof switch is pushed either to the "OPEN" or "CLOSE" side, either the open or close relay in the control unit is activated to rotate the sun roof motor either in the open or close direction.
The control unit also receiving a signal from the safety stop switch or limit switch to control the operation of the sun roof motor.

REMOVAL (Fig. 8-408)

Preparation: Disconnect the battery ground cable.

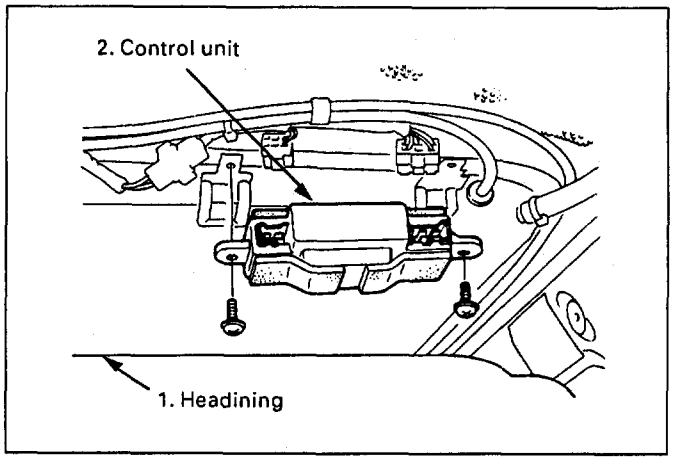

Fig. 8-408

1. **Headlining**
   - Refer to Section 10 "BODY" for headlining removal steps.
2. **Control unit**
   - Disconnect the two connectors.
   - Remove the two screws.

INSTALLATION

To install, follow the removal steps in the reverse order.

SAFETY STOP SWITCH

The switch sends out a signal to the control unit when the sun roof reaches the safety stop position 180mm (7.1in) short of the fully closed position. (Fig. 8-409)

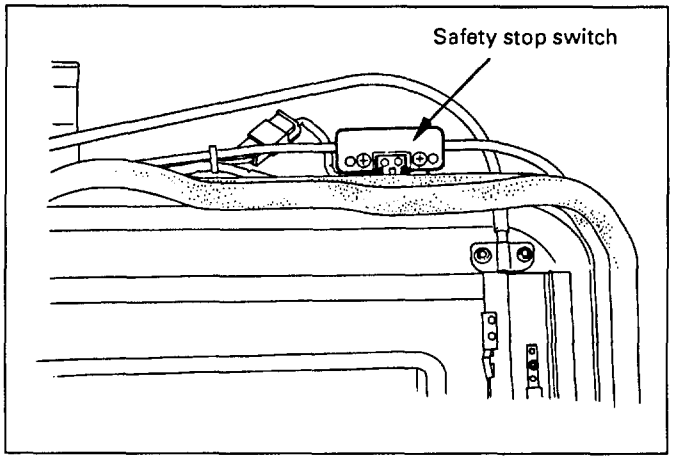

Fig. 8-409

INSPECTION (FIG. 8-410)

Check the continuity between the switch terminals. When the result of inspection is found abnormal, repair or replace the switch.

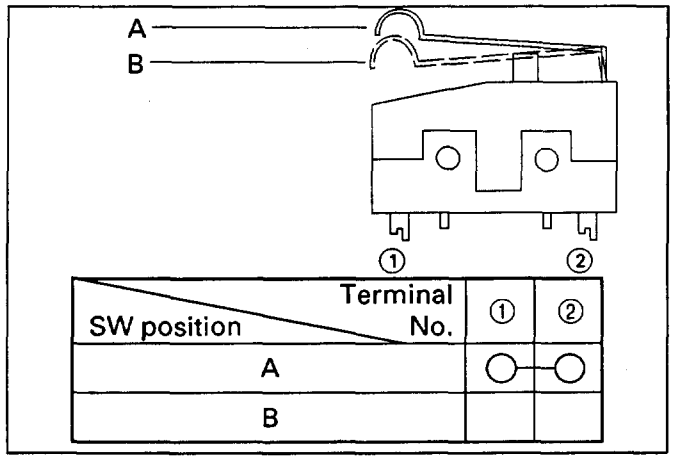

SW position \ Terminal No.	①	②
A	○	○
B		

Fig. 8-410

REMOVAL

1. **Sun roof drive unit assembly (Fig. 8-411)**
   - Refer to "Sun Roof Frame Complete Assembly" in Section 10 "BODY".

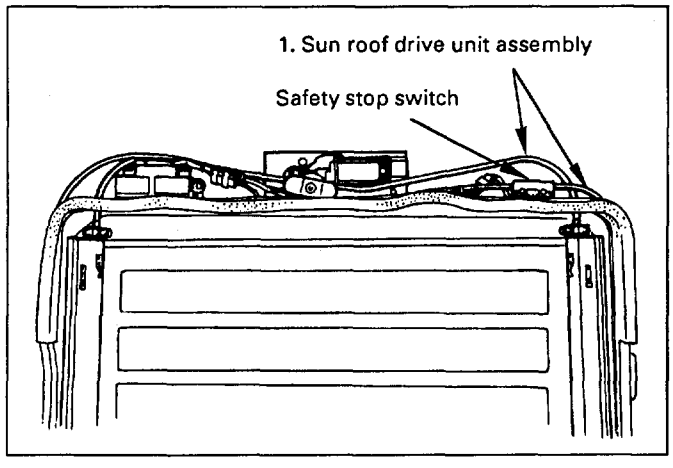

Fig. 8-411

INSTALLATION

To install, follow the removal steps in the reverse order.

LIMIT SWITCH

The switch sends out a signal when the sun roof reaches the limit stop position 165mm (6.5in) before fully closed position. (Fig. 8-412)

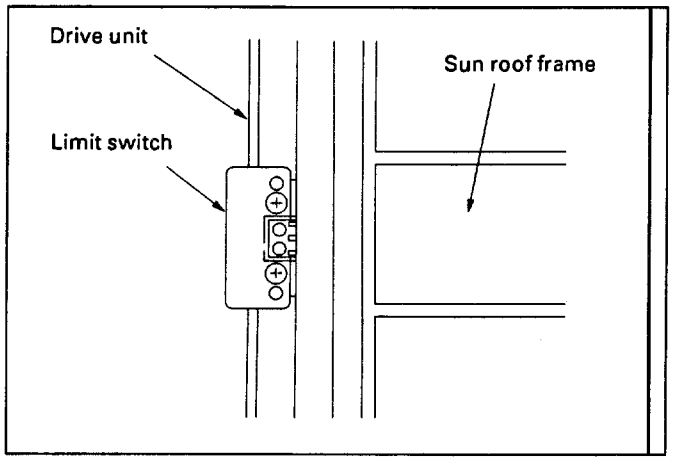

Fig. 8-412

INSPECTION (FIG. 8-413)

Check the continuity between the switch terminals. When the result of inspection is found abnormal, repair or replace the switch.

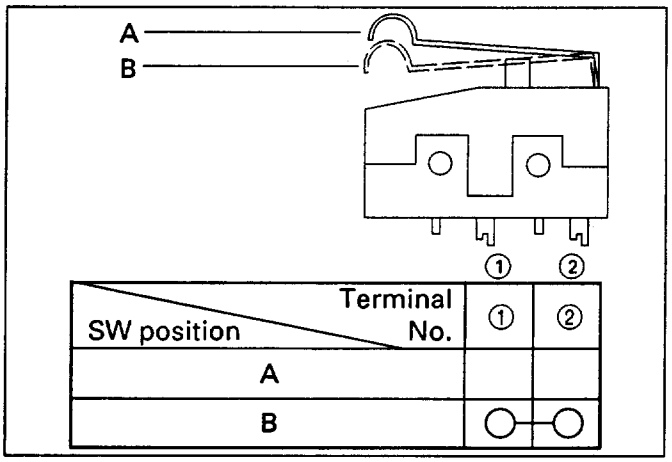

SW position \ Terminal No.	①	②
A		
B	○	○

Fig. 8-413

REMOVAL

1. **Sun roof drive unit assembly (Fig. 8-414)**
   - Refer to "Sun Roof Frame Complete Assembly" in Section 10 "BODY".

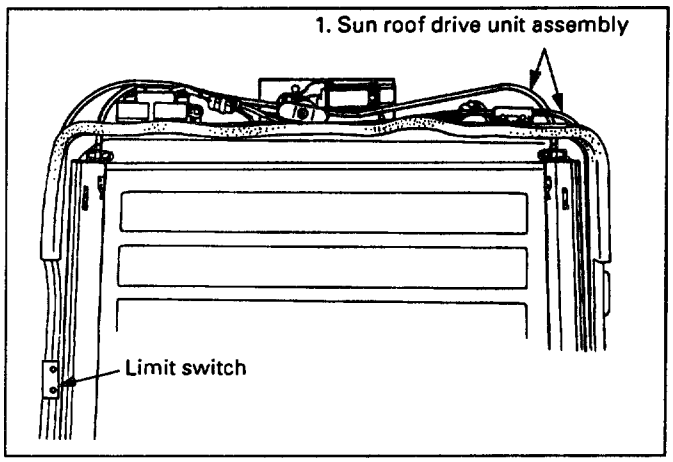

Fig. 8-414

INSTALLATION

To install, follow the removal steps in the reverse order.

SUN ROOF MOTOR

INSPECTION

SW position \ Terminal No.	1	2
Sun roof open side	⊕	⊖
Sun roof close side	⊖	⊕

Fig. 8-415

Apply the battery voltage to the connector terminals of the sun roof motor to check its function (Fig. 8-415).

REMOVAL (FIG. 8-416)

Preparation: Disconnect the battery ground cable.

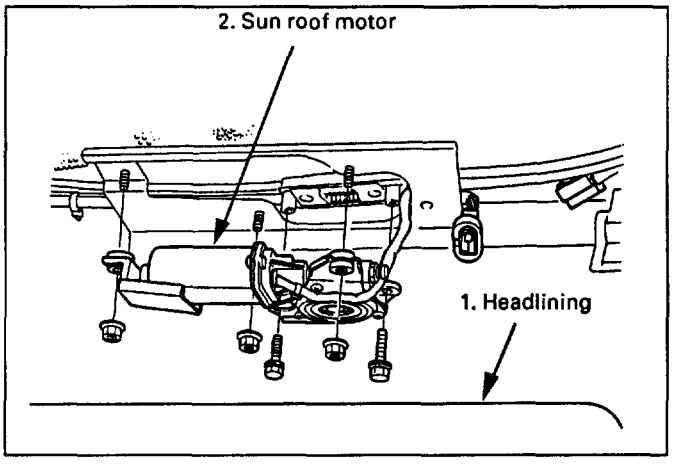

Fig. 8-416

1. **Headlining**
   - Refer to "Headlining" in Section 10 "Body".
2. **Sun roof motor**
   - Disconnect the connector.
   - Remove the three nuts and two screws.

INSTALLATION

To install, follow the removal steps in the reverse order.

POWER WINDOW RELAY

INSPECTION

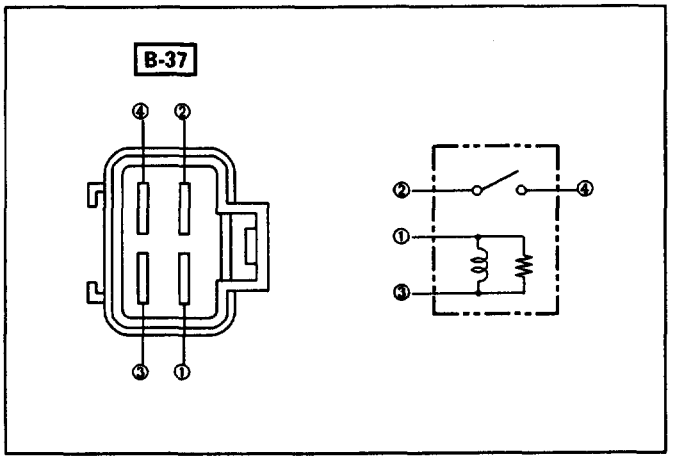

Fig. 8-417

Check to see if there is continuity between the relay terminals. (Fig. 8-417)
Replace the relay when the result of inspection is found abnormal.

② - ④	No Continuity
(When the battery voltage is applied between ① - ③)	
② - ④	Continuity

NOTE:
For the relay removal, refer to "Connector Handling" in the "NOTES FOR WORKING ON ELECTRICAL ITEMS" in this section.

POWER SEAT

GENERAL DESCRIPTION

The circuit consists of the power seat switch, front tilt motor (driver's seat only), rear tilt motor (driver's seat only), slide motor and the recliner motor.

The power seat switch has a tilt & slide switch and a recliner switch. The motor built in the seat can be actuated by operating these switches to move the seat to desired position, independent of the position of the starter switch.

PARTS LOCATION

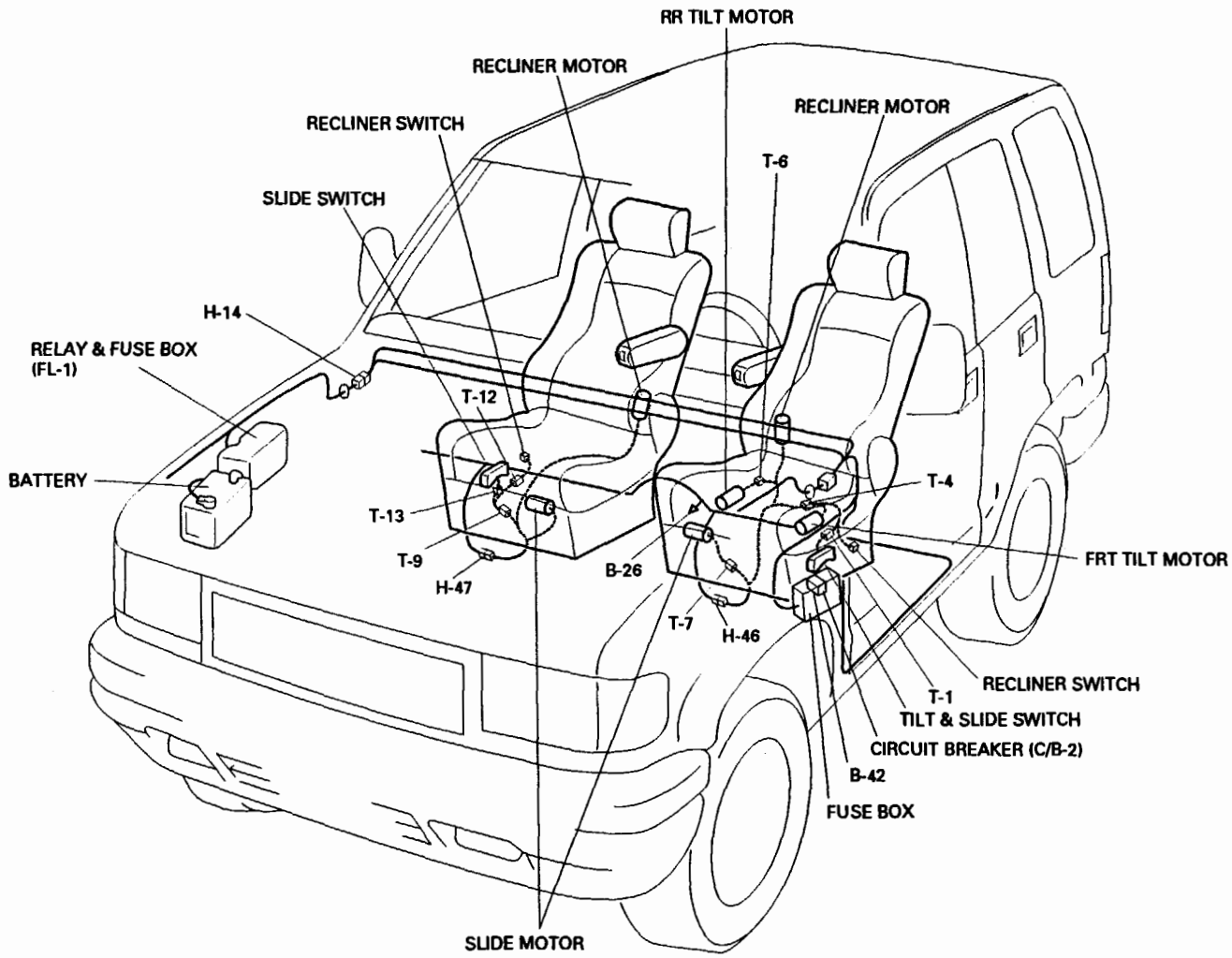

Fig. 8-418

CIRCUIT DIAGRAM

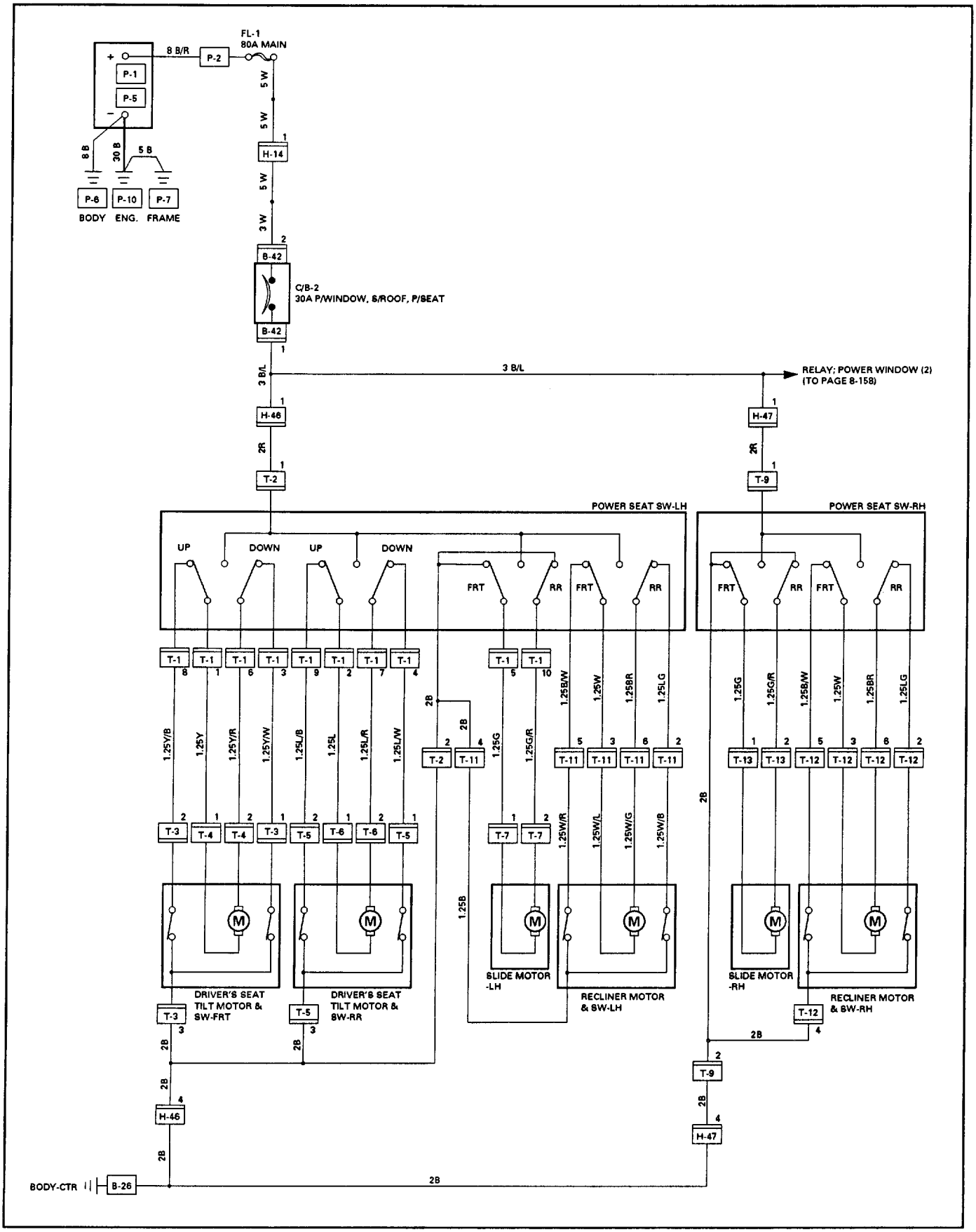

Fig. 8-419

CONNECTOR LIST

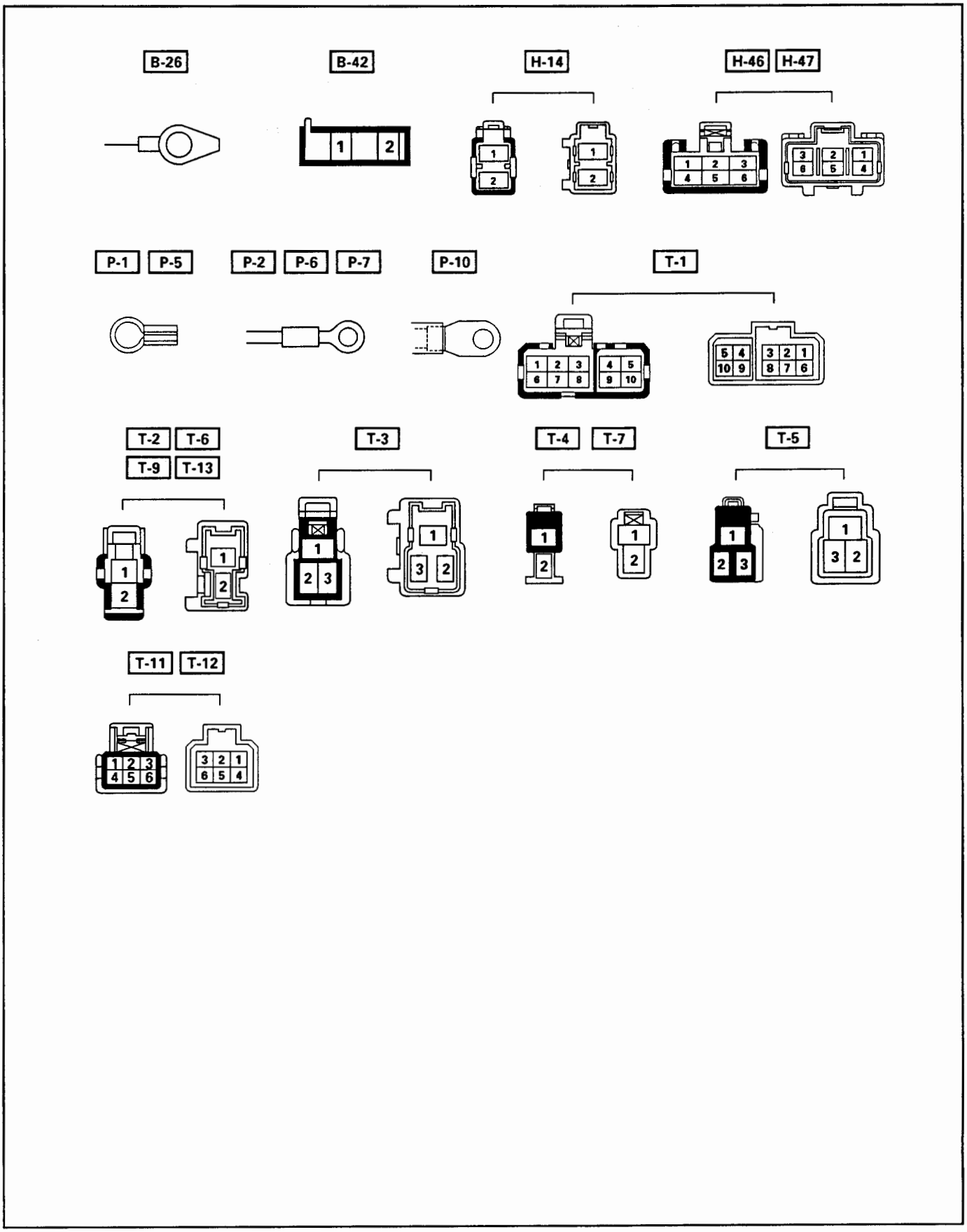

Fig. 8-420

DIAGNOSIS

QUICK CHART FOR CHECK POINTS

Trouble mode \ Check point		Circuit breaker (30A)	Tilt & slide SW			Tilt & slide motor			Reclining SW	Reclining motor	Cable harness
			FRT tilt	RR tilt	Slide	FRT tilt	RR tilt	Slide			
Driver seat	1. Power seat does not operate at any direction	○ (1)									○ (2)
	2. Front tilt mechanism does not operate		○ (1)			○ (2)					○ (3)
	3. Rear tilt mechanism does not operate			○ (1)			○ (2)				○ (3)
	4. Sliding mechanism does not operate				○ (1)			○ (2)			○ (3)
	5. Reclining mechanism does not operate								○ (1)	○ (2)	○ (3)
Passenger seat	1. Power seat does not operate at any direction	○ (1)									○ (2)
	2. Sliding mechanism does not operate				○ (1)			○ (2)			○ (3)
	3. Reclining mechanism does not operate								○ (1)	○ (2)	○ (3)

NOTE: Figure in parenthesis "( )" indicates the order of inspection.

DRIVER SEAT

1. POWER SEAT DOES NOT OPERATE AT ANY DIRECTION

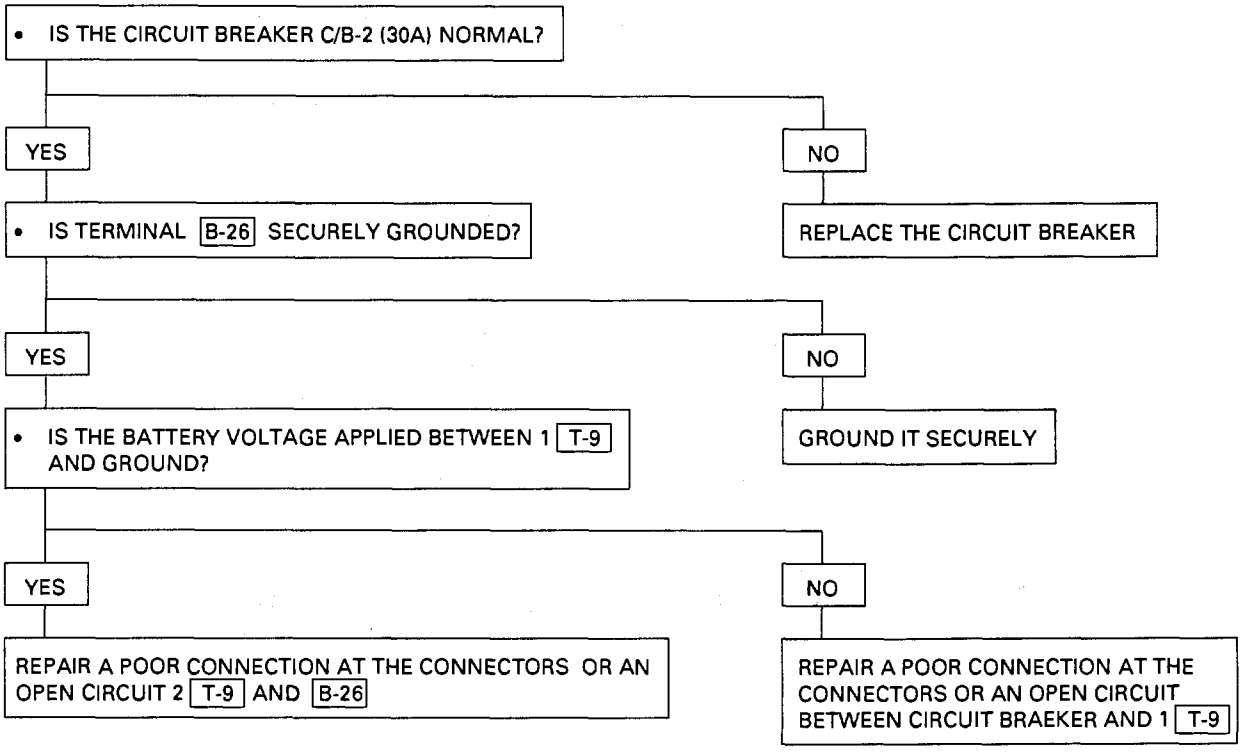

2. FRONT TILT MECHANISM DOES NOT OPERATE

- IS TILT & SLIDE SWITCH NORMAL?
  - NO → REPAIR OR REPLACE THE TILT & SLIDE SWITCH
  - YES → IS FRONT TILT MOTOR NORMAL?
    - NO → REPAIR OR REPLACE THE FRONT TILT MOTOR
    - YES → REPAIR A POOR CONNECTION AT THE CONNECTORS OR AN OPEN CIRCUIT BETWEEN 1 [T-1] AND 1 [T-4], 6 [T-1] AND 2 [T-4], 3 [T-1] AND 1 [T-3], 8 [T-1] AND 2 [T-3] OR 3 [T-3]

3. REAR TILT MECHANISM DOES NOT OPERATE

- IS TILT & SLIDE SWITCH NORMAL?
  - NO → REPAIR OR REPLACE THE TILT & SLIDE SWITCH
  - YES → IS REAR TILT MOTOR NORMAL?
    - NO → REPAIR OR REPLACE THE REAR TILT MOTOR
    - YES → REPAIR A POOR CONNECTION AT THE CONNECTORS OR AN OPEN CIRCUIT BETWEEN 2 [T-1] AND 1 [T-6], 7 [T-1] AND 2 [T-6], 4 [T-1] AND 1 [T-5], 9 [T-1] AND 2 [T-5] OR 3 [T-5]

4. SLIDING MECHANISM DOES NOT OPERATE

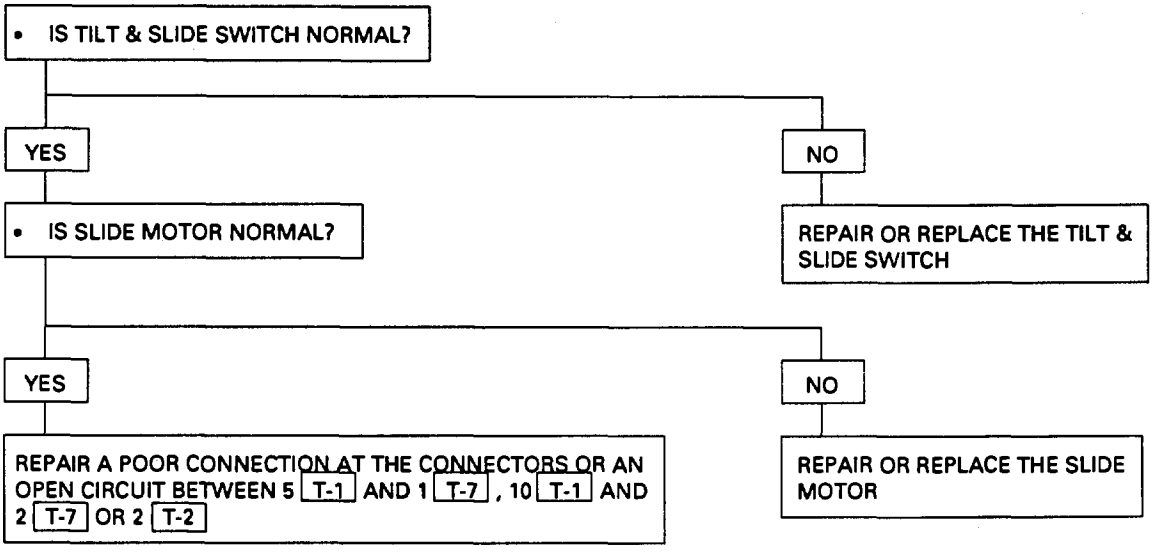

5. RECLINING MECHANISM DOES NOT OPERATE

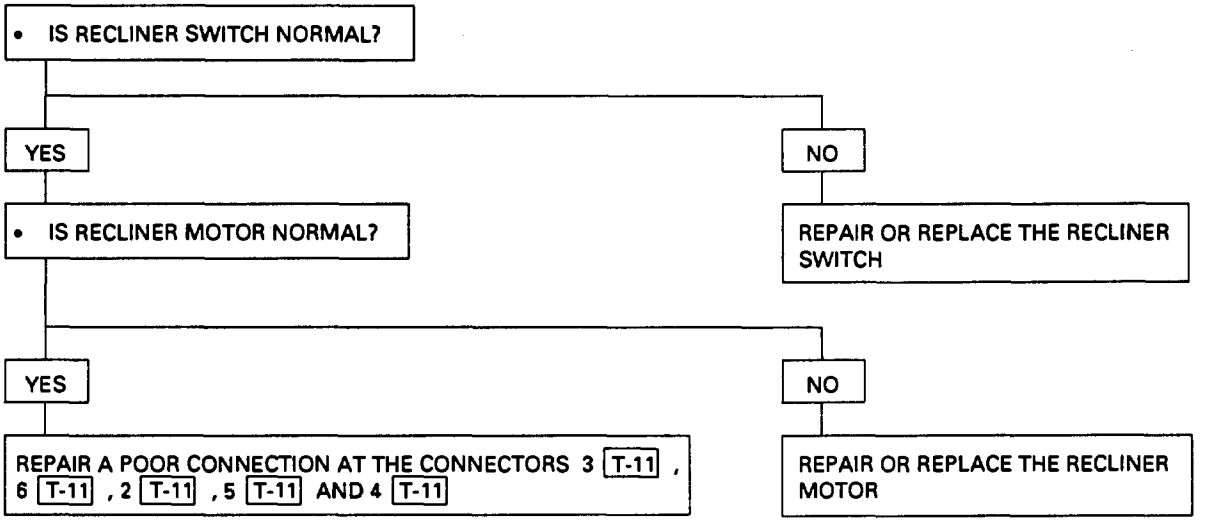

PASSENGER SEAT

1. POWER SEAT DOES NOT OPERATE AT ANY DIRECTION

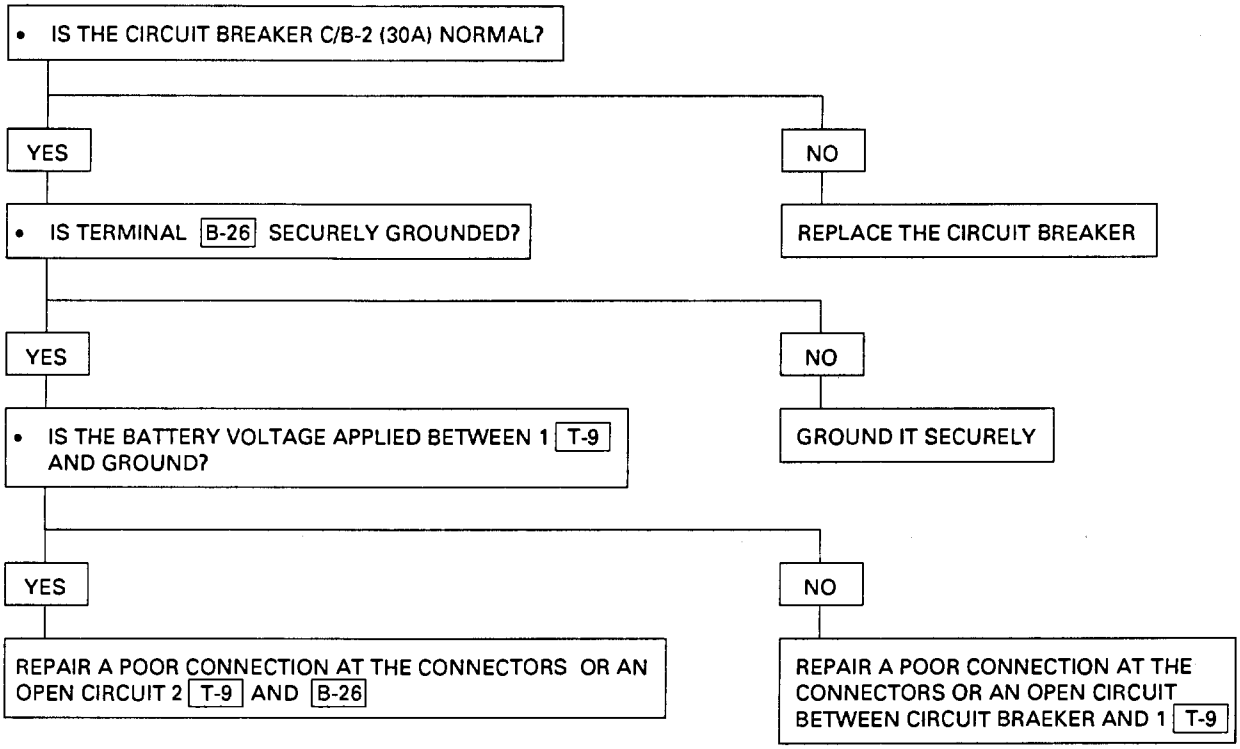

2. SLIDING MECHANISM DOES NOT OPERATE

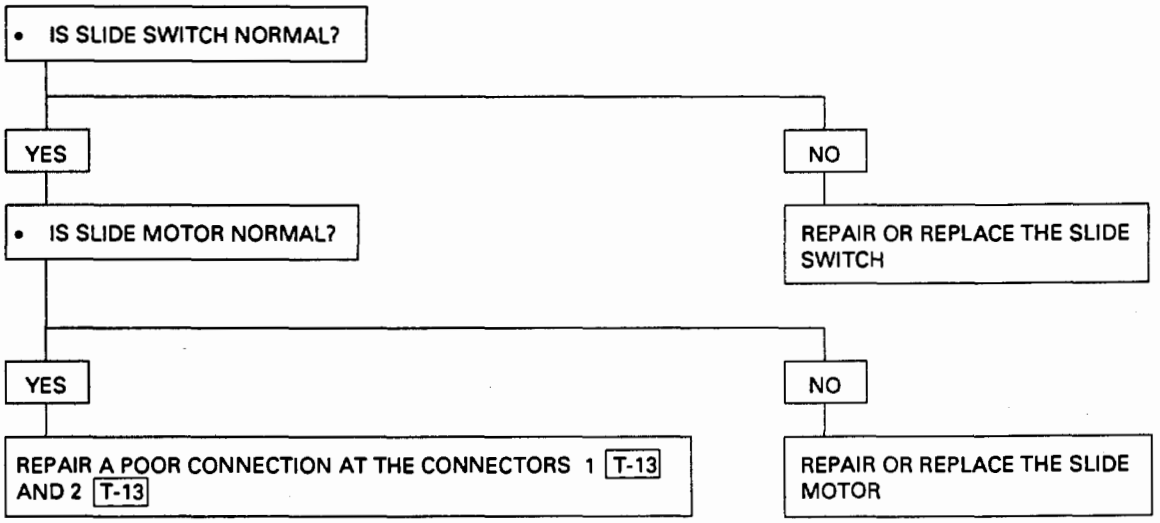

3. RECLINING MECHANISM DOES NOT OPERATE

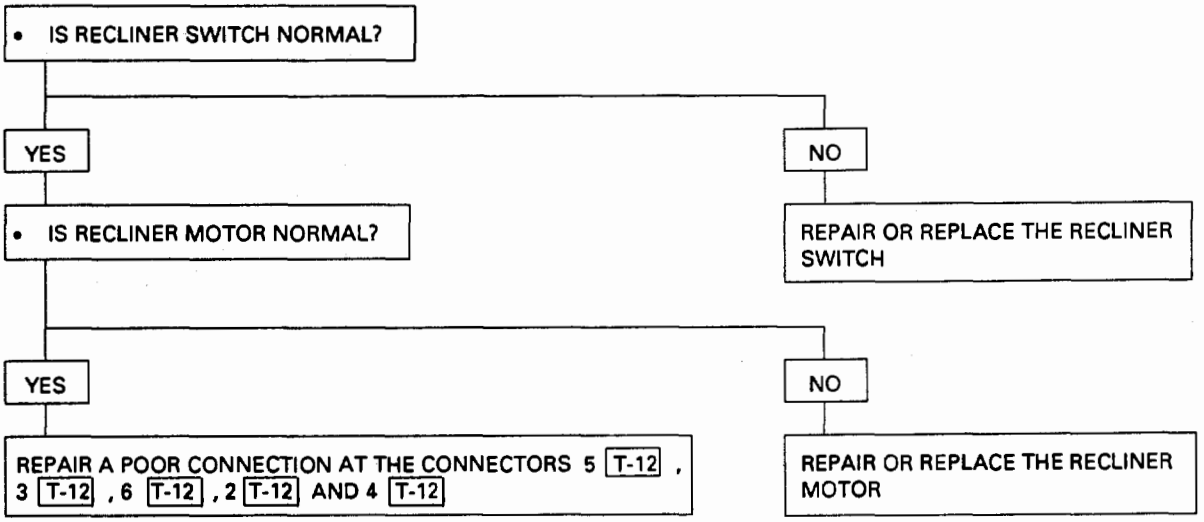

POWER SEAT SWITCH DRIVER SIDE

INSPECTION

Check to see if there is any continuity between the connector terminals while operating the power seat switch. (Fig. 8-421)
Repair or replace the switch when the result of inspection is found abnormal.

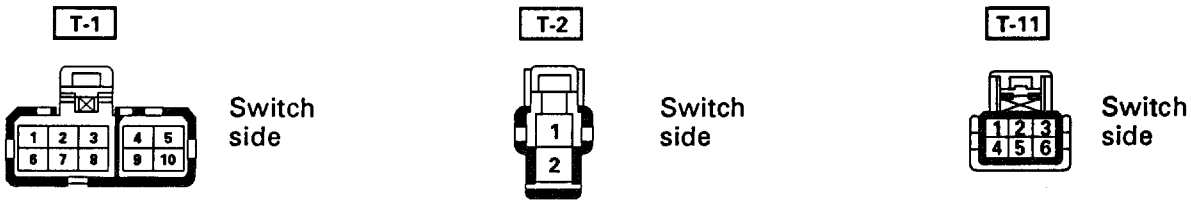

Switch		Direction		Connector No. / Terminal No.	T-1										T-2		T-11			
					1	2	3	4	5	6	7	8	9	10	1	2	2	3	5	6
Tilt & slide switch	Tilt switch	FRT	Up		○		○			○					○					
			Down		○					○		○			○					
		RR	Up			○		○			○				○					
			Down			○					○		○		○					
	Slide switch	Forward							○					○	○	○				
		Rearward							○					○	○	○				
Recliner switch		Forward													○		○	○		
		Rearward													○			○	○	○

Fig. 8-421

Circuit inspection of the power seat switch (Fig. 8-422)

Remove the connector H-46 of the power seat switch and check the voltage and continuity of the harness side connector.

H-46

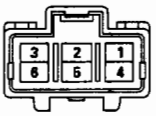

Harness side

Terminal No.	Wire color	Connected to	Item to be measured	Connecting terminal	Checking condition	Standard
1	B/L	C/B-2 (30A)	Voltage	1-Ground	—	Apprpx. 12V
4	B	Ground	Continuity	4-Ground	—	Continuity

Fig. 8-422

PASSENGER SIDE

INSPECTION

Check to see if there is any continuity between the connector terminals while operating the power seat switch. (Fig. 8-423)
Repair or replace the switch when the result of inspection is found abnormal.

T-9

Switch side

T-12

Switch side

T-13

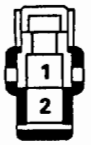

Switch side

Switch	Direction \ Connector No. / Terminal No.	T-9 1	T-9 2	T-12 2	T-12 3	T-12 4	T-12 5	T-12 6	T-13 1	T-13 2
Slide switch	Forward	○	○						○	○
	Rearward	○	○						○	○
Recliner switch	Forward	○		○	○			○		
	Rearward	○		○			○	○		

Fig. 8-423

Circuit inspection of the power seat switch (Fig. 8-424)

1 Remove the connector H-47 of the power seat switch and check the voltage and continuity of the harness side connector.

H-47

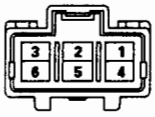

Harness side

Terminal No.	Wire color	Connected to	Item to be measured	Connecting terminal	Checking condition	Standard
1	B/L	C/B-2 (30A)	Voltage	1-Ground	—	Apprpx. 12V
4	B	Ground	Continuity	4-Ground	—	Continuity

Fig. 8-424

REMOVAL (FIG. 8-425)

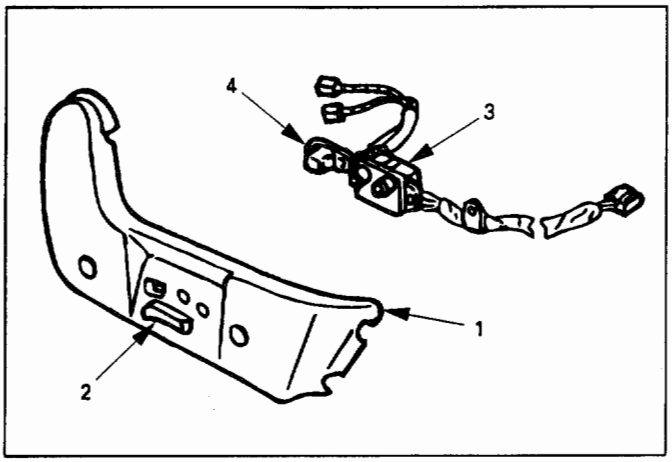

Fig. 425

1. **Side cover**
   - Refer to "POWER SEAT" in Section 10 "BODY".
2. **Tilt & slide switch lever**
   - Hold the switch lever with your fingers and pull it toward you.
3. **Tilt & slide switch**
   - Remove two screws.
4. **Recliner switch**
   - Remove two screws.

INSTALLATION

To install, follow the removal steps in the reverse order.

FRONT TILT MOTOR
REAR TILT MOTOR
SLIDE MOTOR
RECLINER MOTOR

INSPECTION (FIG. 8-426)

Apply bettery voltage to the connector terminals of the motor to check its function.

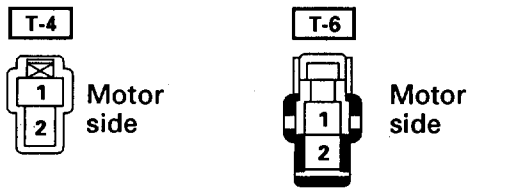

Direction \ Motor	FRT tilt		RR tilt	
Connector No.	T-4		T-6	
Terminal No.	1	2	1	2
Up	⊕	⊖	⊕	⊖
Down	⊖	⊕	⊖	⊕

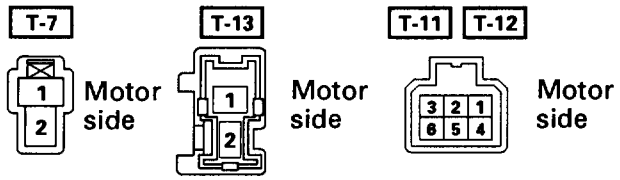

Direction \ Motor	Slide				Recliner			
	Driver		Passenger		Driver		Passenger	
Connector No.	T-7		T-13		T-11		T-12	
Terminal No.	1	2	1	2	3	6	3	6
Forward	⊕	⊖	⊕	⊖	⊕	⊖	⊕	⊖
Rearward	⊖	⊕	⊖	⊕	⊖	⊕	⊖	⊕

Fig. 8-426

REMOVAL AND INSTALLATION (FIG. 8-427, 8-428)

Refer to "POWER SEAT" in Section 10 "BODY".

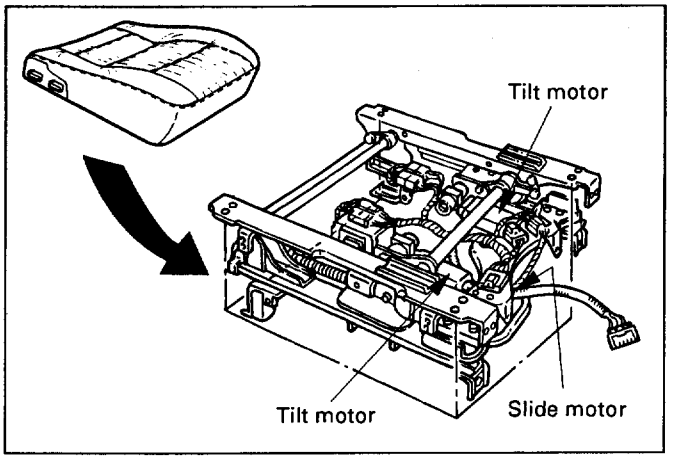

Fig. 8-427

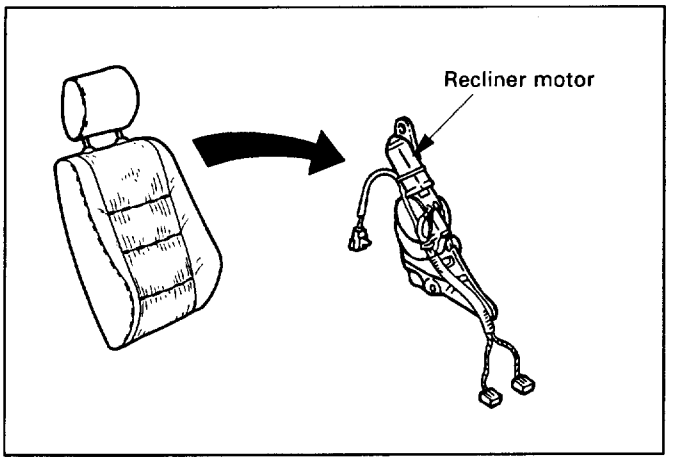

Fig. 8-428

SEAT HEATER

GENERAL DESCRIPTION

The circuit consists of the starter switch, seat heater switch and the heat unit.
The seat heater is provided in driver's and front passenger seats (as option). When the seat heater switch is ON, the seat heater built in the seat back and cushion is switched on to warm the seats.
To prevent the seats from being overheated, the circuit is fitted with a thermostat.

PARTS LOCATION

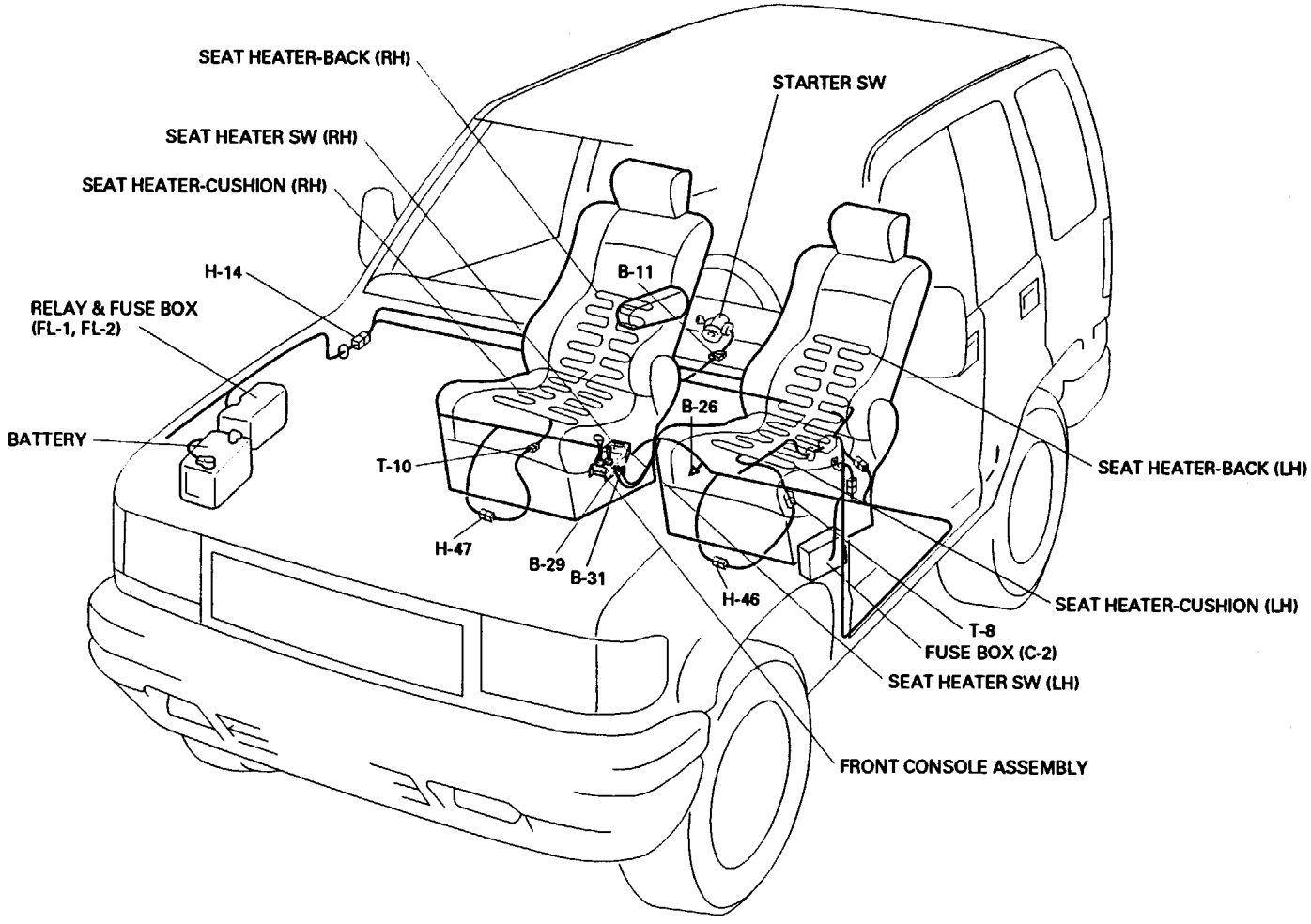

Fig. 8-429

CIRCUIT DIAGRAM

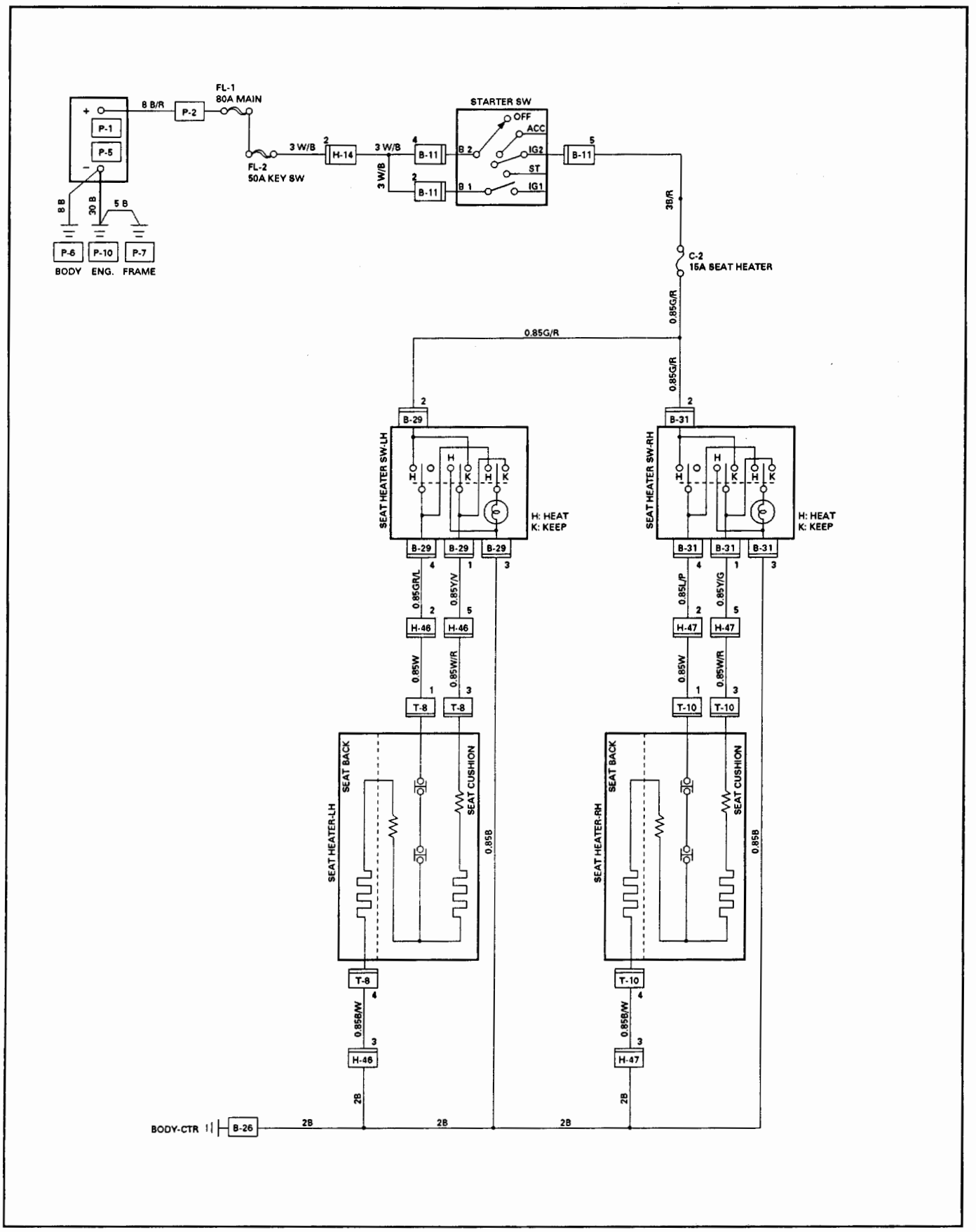

Fig. 8-430

CONNECTOR LIST

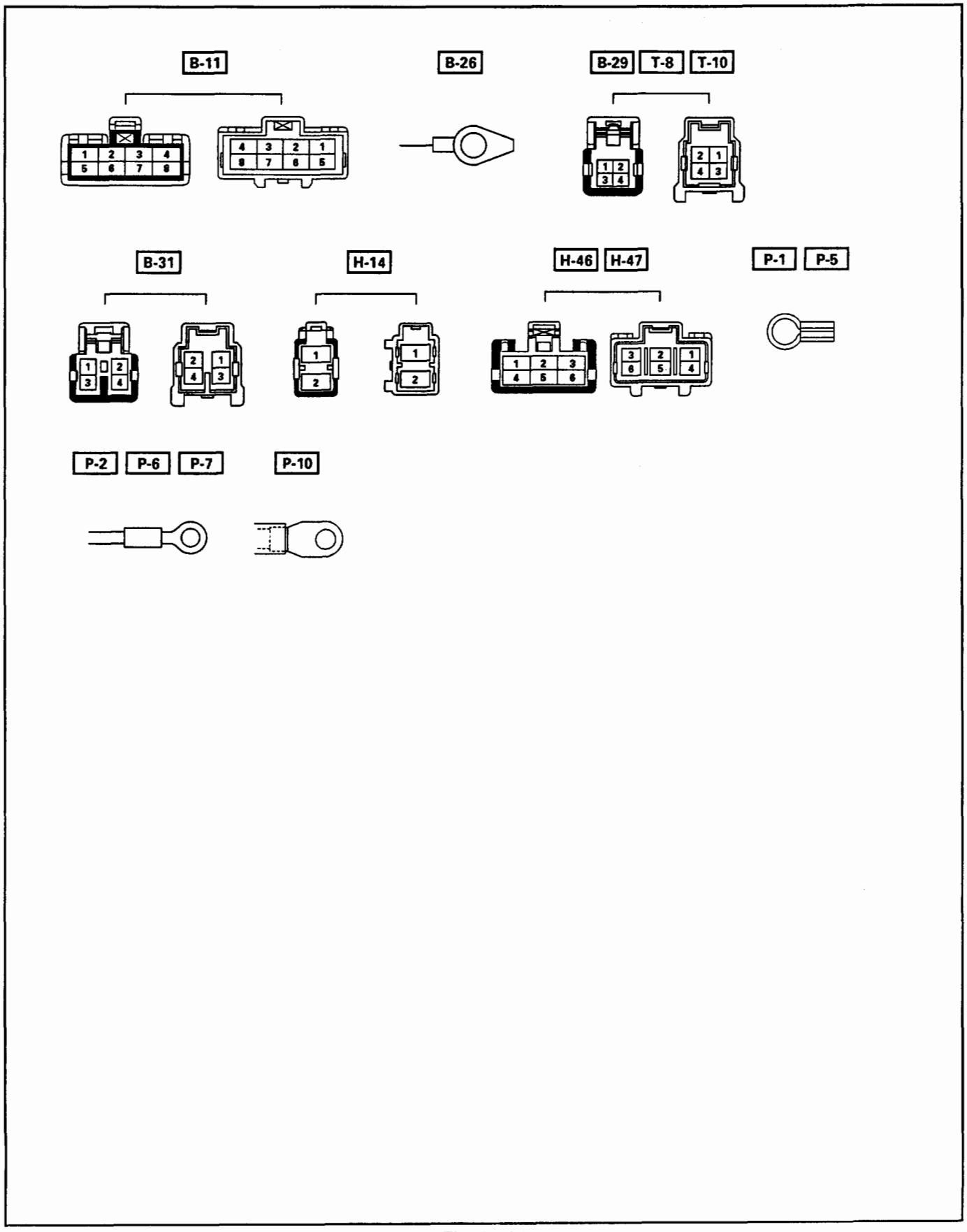

Fig. 8-431

DIAGNOSIS

QUICK CHART FOR CHECK POINTS

Trouble mode \ Check point	Fuse C-2 (15A)	Seat heater SW		Heat unit		Cable harness
		Driver side	Passenger side	Driver side	Passenger side	
1. Seat heater on both sides does not heat up	○ (1)					○ (2)
2. Seat heater on the driver (or passenger) side does not heat up		○ (2)	○ ((2))	○ (3)	○ ((3))	○ (1)
3. Heat (or keep) position does not heat up		○ (1)	○ ((1))	○ (2)	○ ((2))	

NOTE: Figure in parenthesis "( )" indicates the order of inspection.

1. SEAT HEATER ON BOTH SIDES DOES NOT HEAT UP

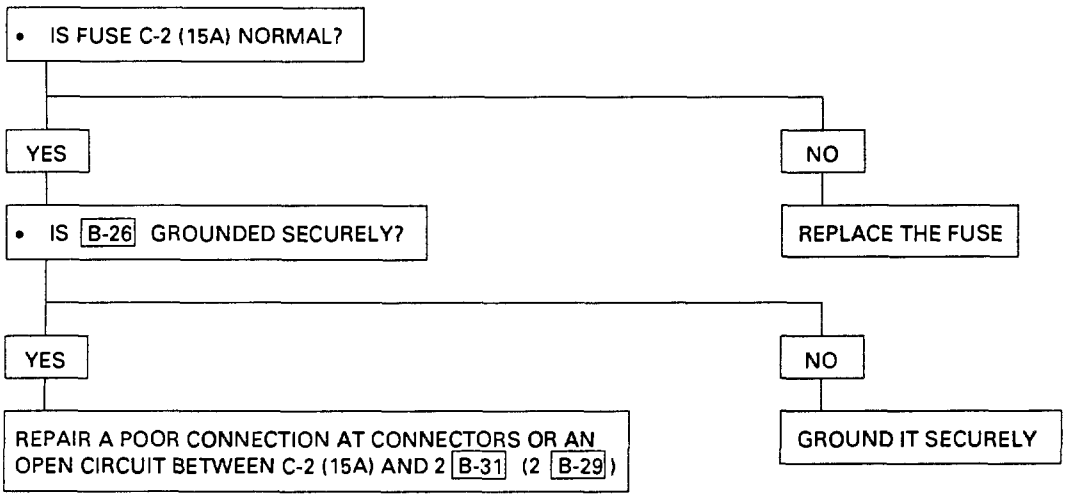

2. SEAT HEATER ON THE DRIVER (OR PASSENGER) SIDE DOES NOT HEAT UP

- DISCONNECT THE SEAT HEATER SWITCH CONNECTOR
- TURN THE STARTER SWITCH "ON"
- IS THE BATTERY VOLTAGE APPLIED BETWEEN THE SEAT HEATER SW HARNESS SIDE CONNECTOR 2 [B-29] (OR 2 [B-31]) AND THE GROUND?

YES

- IS THE SEAT HEATER SW FUNCTION NORMAL?

NO

REPAIR A POOR CONNECTION AT THE CONNECTORS OR AN OPEN CIRCUIT IN THE CIRCUIT

YES

- DISCONNECT THE HEAT UNIT CONNECTOR
- IS THERE ANY CONTINUITY BETWEEN THE HEAT UNIT CONNECTOR 1 [T-8] , 3 [T-8] AND 4 [T-8] (OR 1 [T-10] , 3 [T-10] AND 4 [T-10])

NO

REPLACE THE SEAT HEATER SW

YES

REPAIR A POOR CONNECTION AT CONNECTORS OR AN OPEN CIRCUIT BETWEEN 1 [B-29] AND 3 [T-8] , 4 [B-29] AND 1 [T-8] , 4 [T-8] -GROUND (OR 1 [B-31] AND 3 [T-10] , 4 [B-31] AND 1 [T-10] , 4 [T-10] AND GROUND)

NO

REPLACE THE HEAT UNIT

3. HEAT (OR KEEP) POSITION DOES NOT HEAT UP

- IS THE SEAT HEATER SW FUNCTION NORMAL?

YES

REPLACE THE HEAT UNIT

NO

REPLACE THE SEAT HEATER SW

STARTER SWITCH

Refer to "START AND CHARGING" in this section.

SEAT HEATER SWITCH

INSPECTION

Check the continuity between terminals of the seat heater switch. (Fig. 8-432)
Repair or replace the switch when the result of inspection is found abnormal.

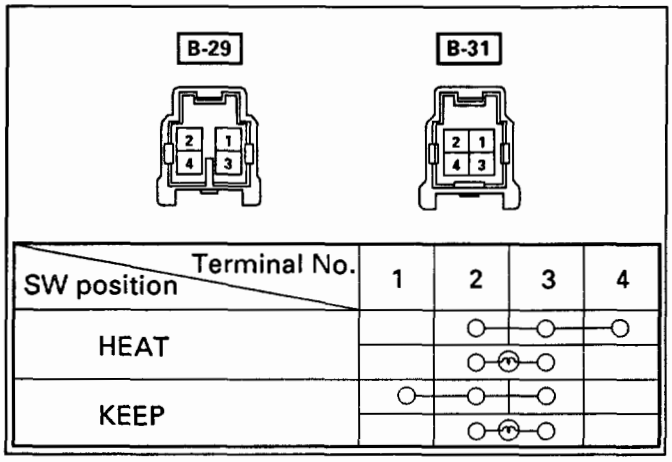

Fig. 8-432

REMOVAL (FIG. 8-433)

Preparation: Disconnect the battery ground cable.

1. **Front console assembly**
   - Refer to the FRONT CONSOLE ASSEMBLY in Section 10 BODY.
2. **Seat heater switch**
   - To release the lock, pushing the switch locks from the back side of the front console assembly. (Fig. 8-433)

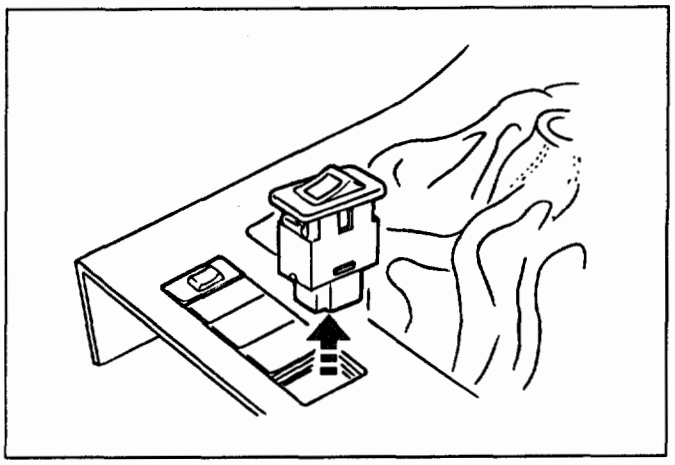

Fig. 8-433

INSTALLATION

To install, follow the removal steps in the reverse order, noting the following point.

1. Push the switch with your fingers until it locks securely.

HEAT UNIT

The heat unit which is incorporated in the both cushion and seat back side. The circuit breaker is also incorporated in the element to prevent the overheat of the heater. (Fig. 8-434)

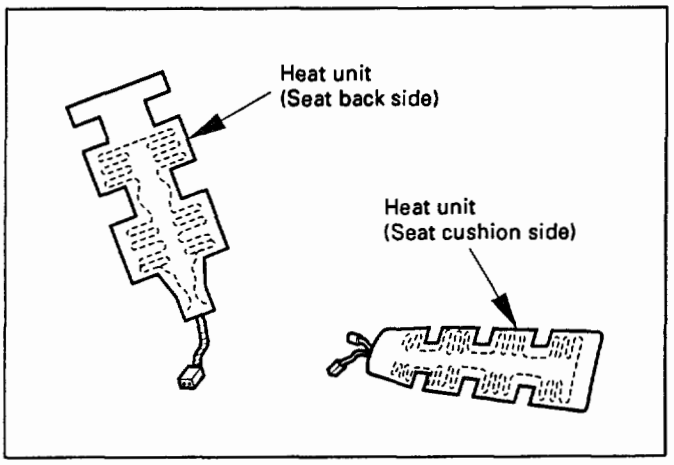

Fig. 8-434

INSPECTION

Check the continuity between the connector terminals. (Fig. 8-435)

Replace the heat unit when the result of inspection is found abnormal.

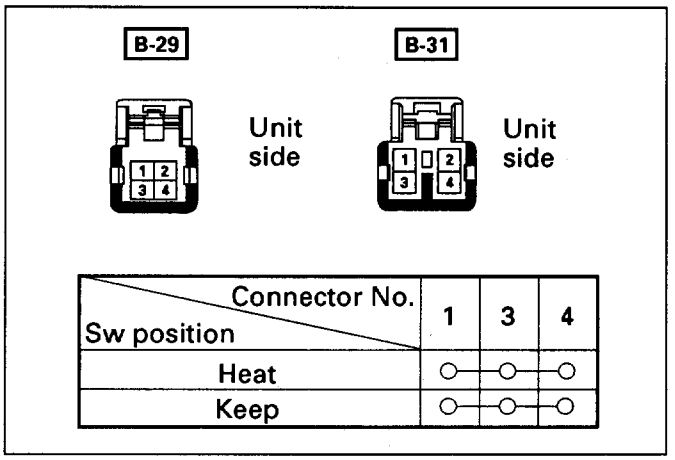

Sw position \ Connector No.	1	3	4
Heat	○	○	○
Keep	○	○	○

Fig. 8-435

REMOVAL AND INSTALLATION (FIG. 8-436, 8-437)

Refer to "SEAT HEATER" of Section 10 "BODY".

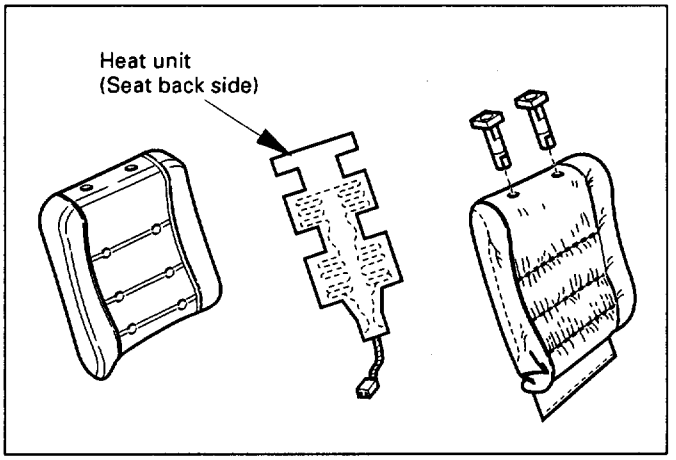

Fig. 8-436

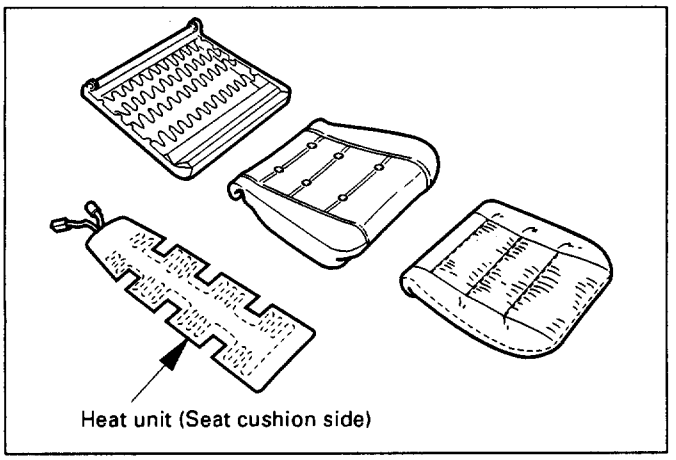

Fig. 8-437

SUPPLEMENTAL RESTRAINT SYSTEM (SRS)-AIR BAG

The system consists of the starter switch, Diagnostic Energy Reserve Module (DERM), dual pole arming sensor, SRS coil assembly, inflator module (driver & passenger), forward sensor and warning light.
SRS is mainly comprised of the deployment loop and the DERM.
The main function of the deployment loop is to flow current into the inflator modules inside the steering wheel (driver side) and the passenger side instrument panel (passenger side) to inflate the air bag. The forward sensor (LH and /or RH) gets activated by a shock caused by collision during running of a vehicle, the current from the battery flows into the inflator modules through dual pole arming sensor, so that the air bag is inflated.
The DERM supplies the current to the deployment loop to ensure that the air bag is inflated, if the power circuit between battery and deployment loop is cut off by the shock of collision.
In addition, the DERM monitors a voltage drops between components, and if the voltage drops below the specified value, the driver is alerted by the "AIR BAG" warning light in meter assembly.
Refer to Section 9J "SUPPLEMENTAL RESTRAINT SYSTEM (SRS)-AIR BAG" for details.

OPERATION OF THE CIRCUIT

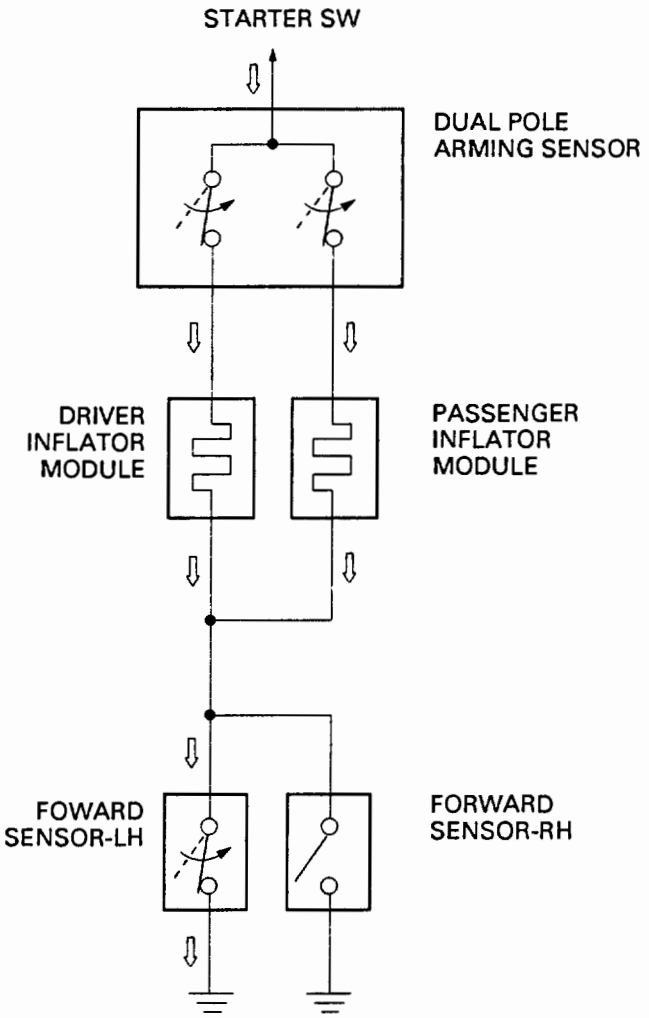

NOTE : Arrow marks "⇨" indicate the direction of current

Fig. 8-438

PARTS LOCATION

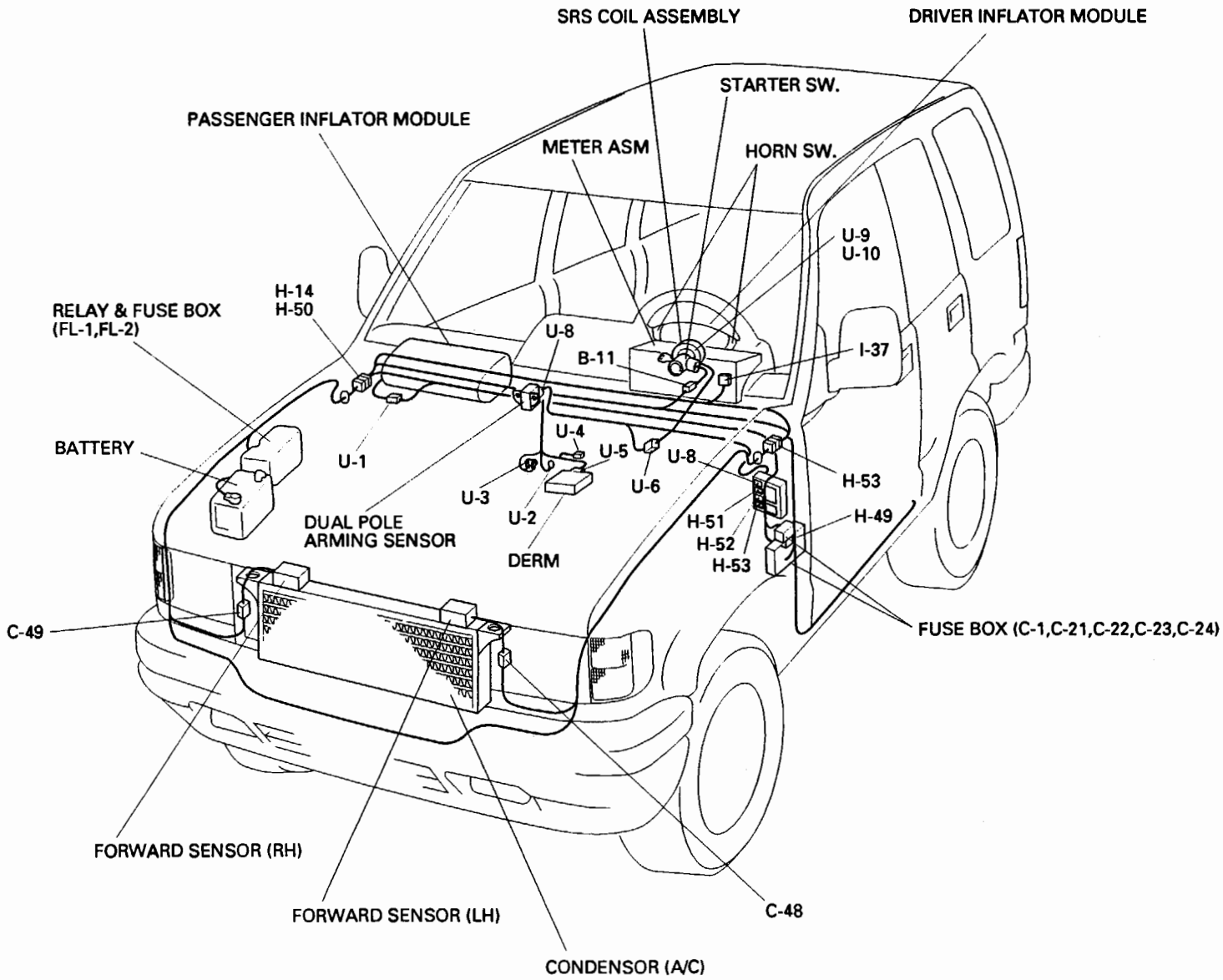

Fig. 8-439

CIRCUIT DIAGRAM

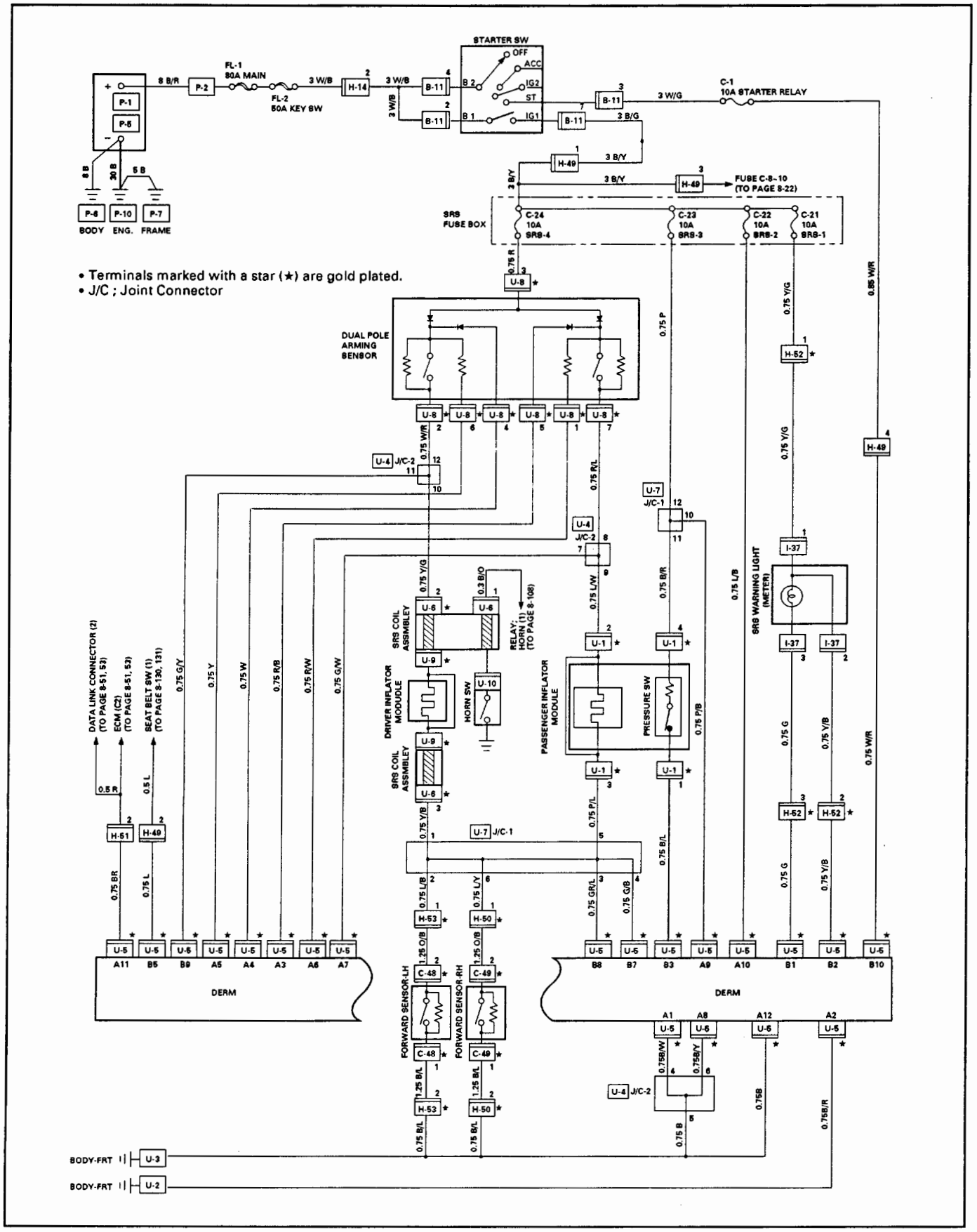

Fig. 8-440

CONNECTOR LIST

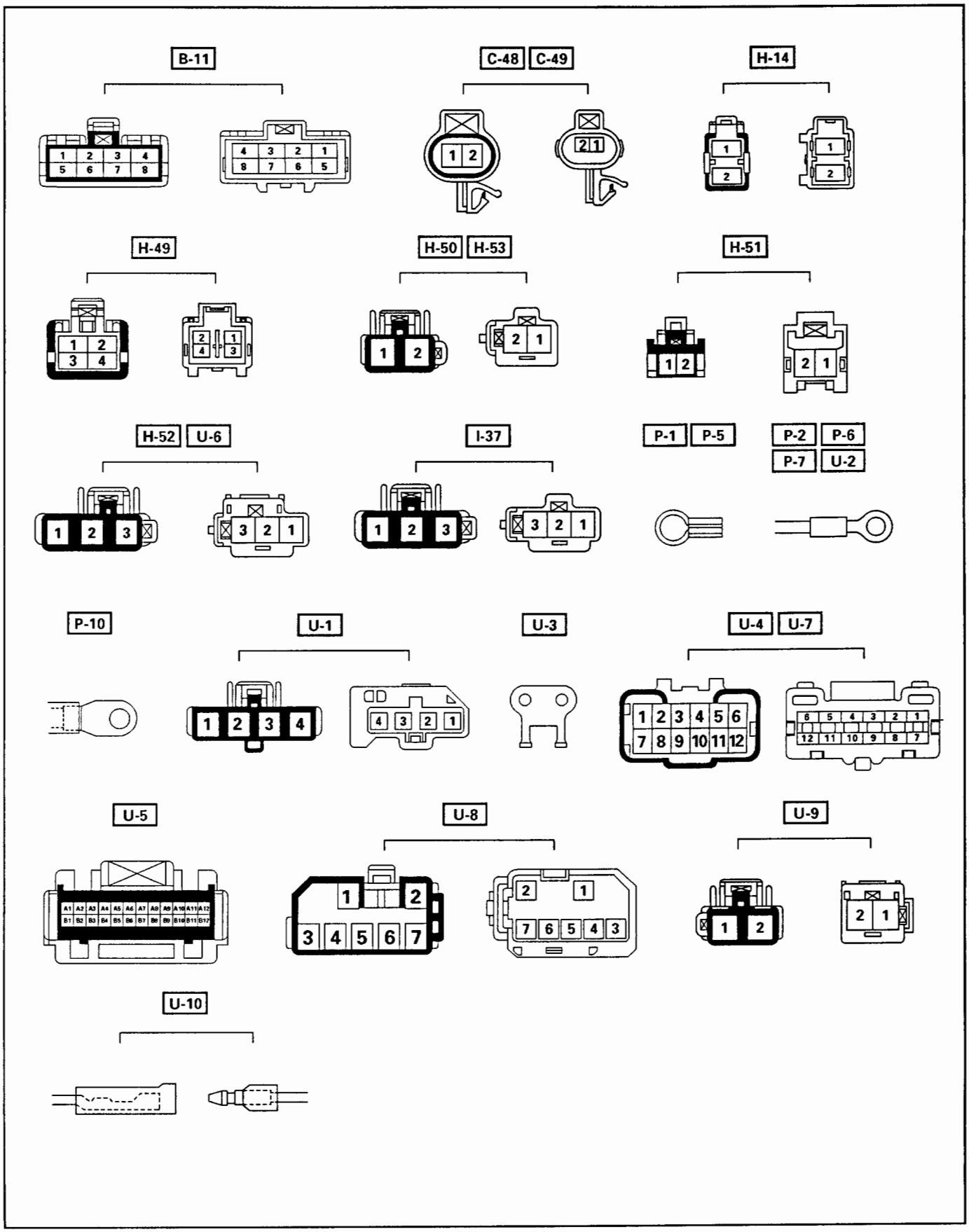

Fig. 8-441

MEMO

ACCESSORIES

CONTENTS

Radio 9A
Cruise control 9B

SECTION 9A

RADIO

CONTENTS

Parts Location 9A-1
Circuit Diagram 9A-2
Antenna 9A-4
Auto Antenna 9A-4
Antenna Mast 9A-5
Rod Type Antenna 9A-6
Tweeter Assembly 9A-7

PARTS LOCATION

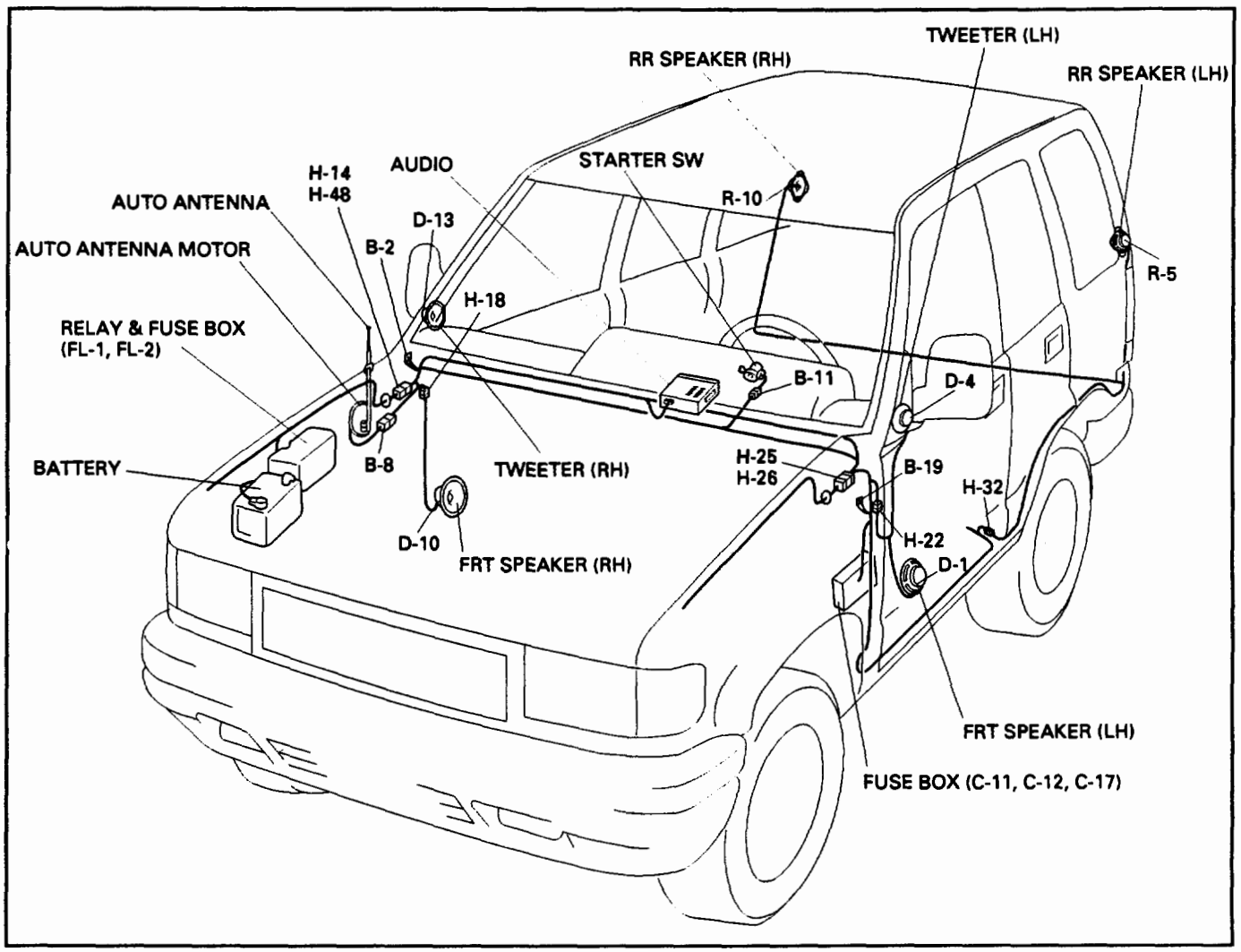

Fig. 9A-1

CIRCUIT DIAGRAM

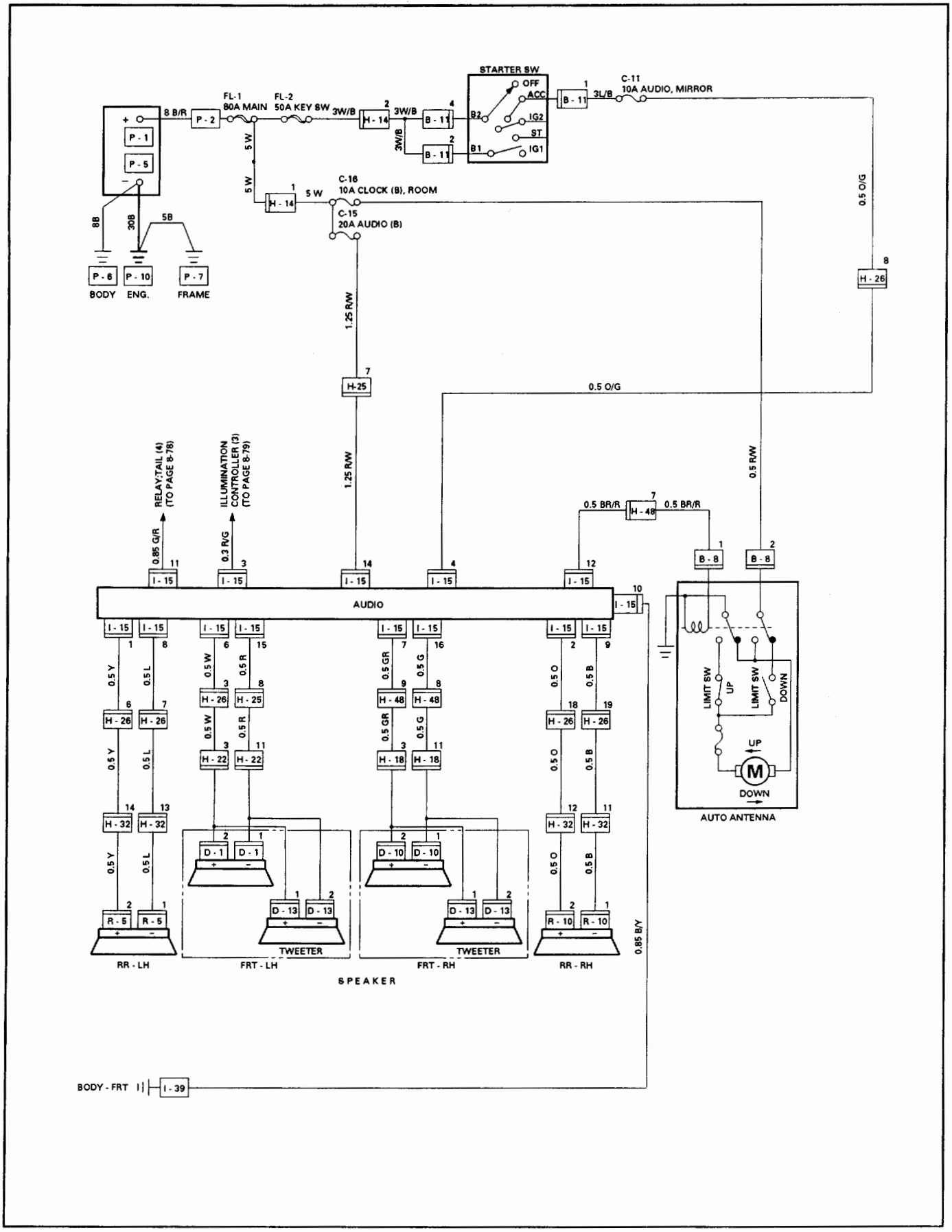

Fig. 9A-2

CONNECTOR LIST

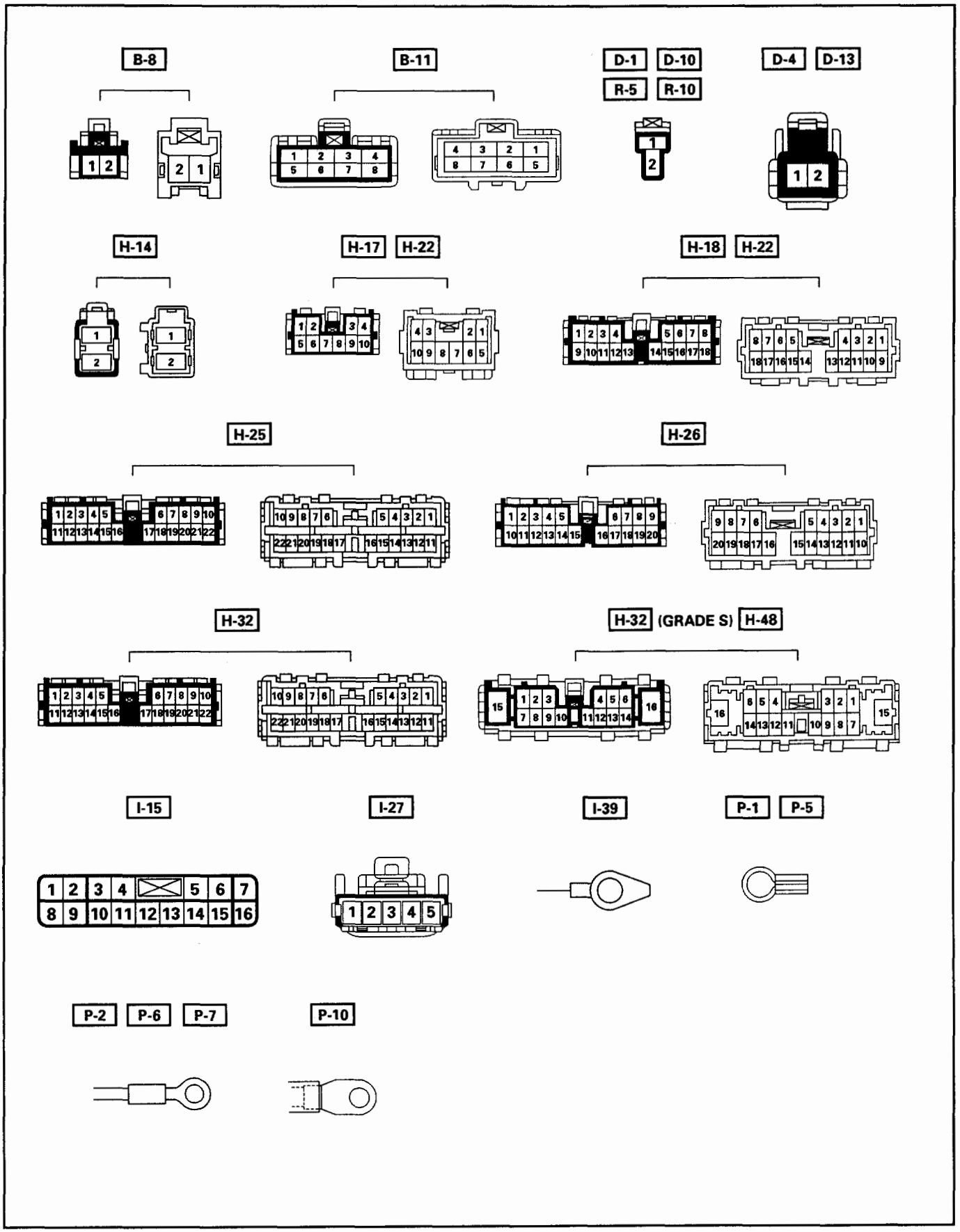

Fig. 9A-3

ANTENNA

AUTO ANTENNA

The auto antenna is interlocked with the radio switch. The antenna rod goes up when the switch is turned on, and goes down when the switch is turned off. The antenna rod also goes down when the starter switch is turned off with the radio on.
The antenna rod goes up or down when the cable connected to the uppermost rod is let out or taken up by the rotation of motor.
The motor is provided with a built-in limit switch. When the up/down motion of the antenna is completed, the limit switch is activated to cut off the circuit. (Fig. 9A-4)

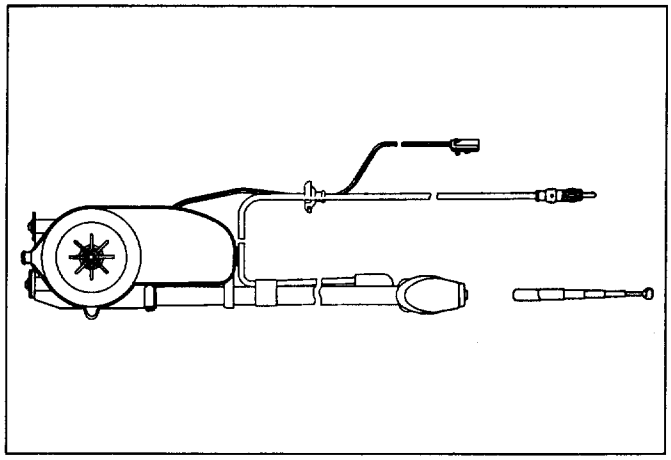

Fig. 9A-4

INSPECTION

Apply battery voltage to the connector terminals of the antenna motor to check to see if the antenna works correctly. (Fig. 9A-5)
Repair the antenna assembly or replace it when the results of inspection are found abnormal.

Operation \ Terminal No.	1	2	Motor bracket
Antenna up	⊕	⊕	⊖
Antenna down		⊕	⊖

Fig. 9A-5

REMOVAL (FIG. 9A-6)

Preparation: Disconnect the battery ground cable.

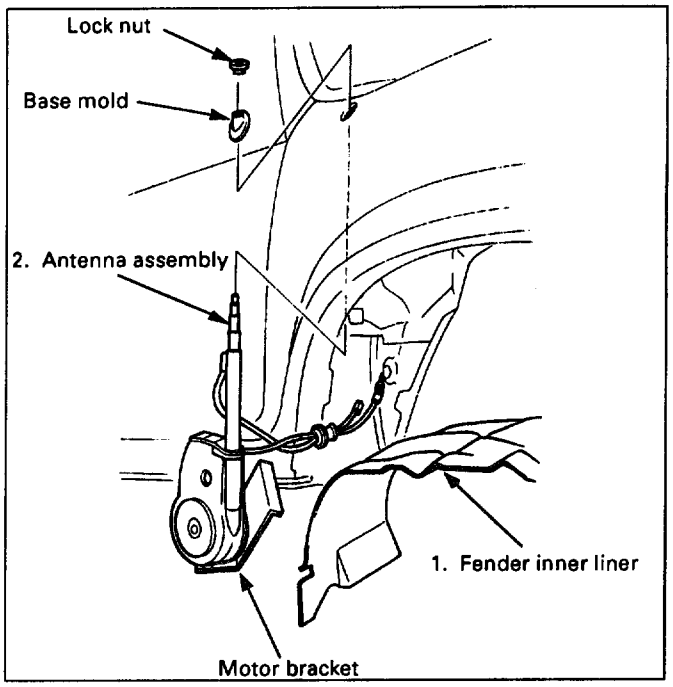

Fig. 9A-6

1. **Fender inner liner**
   - Remove three screws and nine clips.
2. **Antenna assembly**
   - Disconnect the feeder cord and the antenna motor connector at the inside of the vehicle. (Fig. 9A-7)
   - Remove the lock nut and base mold.
   - After taking off the clips and screws, remove the motor bracket.

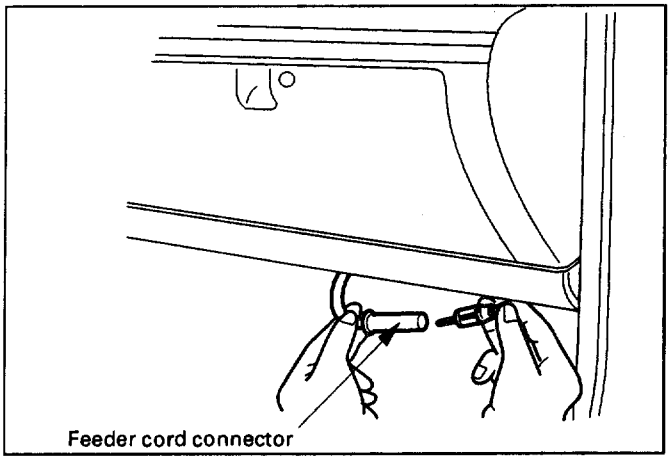

Fig. 9A-7

INSTALLATION

To install, follow the removal steps in the reverse order.

ANTENNA SHAFT

REMOVAL (FIG. 9A-8)

1. **Antenna Nut**
   - Rotate the antenna motor to extend the shaft until the lower part of the antenna shaft is removed from the base.
2. **Antenna top**
   - Turn the antenna top counterclockwise.
3. **Contact sleeve**
4. **Antenna shaft**

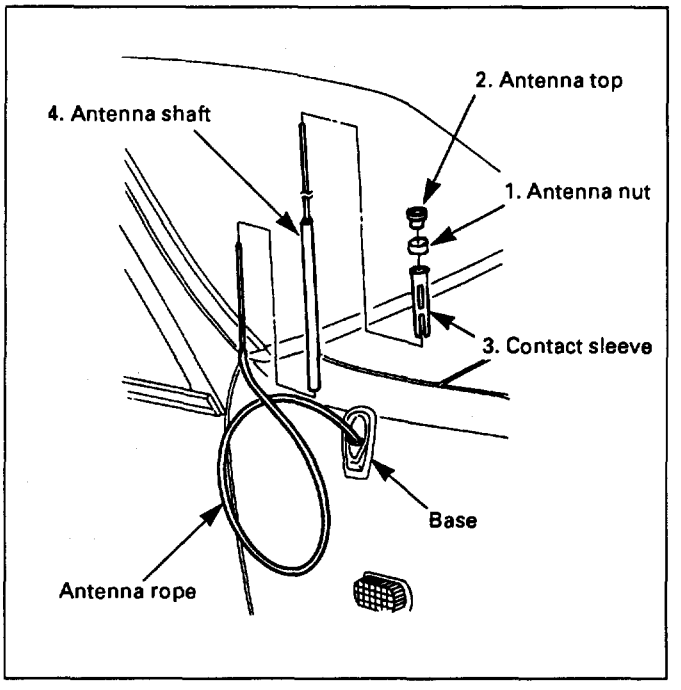

Fig. 9A-8

INSTALLATION

To install, follow the removal steps in the reverse order, noting the following points:

1. Rotate the antenna motor to retract the rod, and push in vertically until the antenna shaft is completly stored.
2. After installation, confirm that the antenna completely extends and retracts.

ANTENNA MAST

REMOVAL (FIG. 9A-9, 9A-10)

Preparation: Disconnect the battery ground cable.

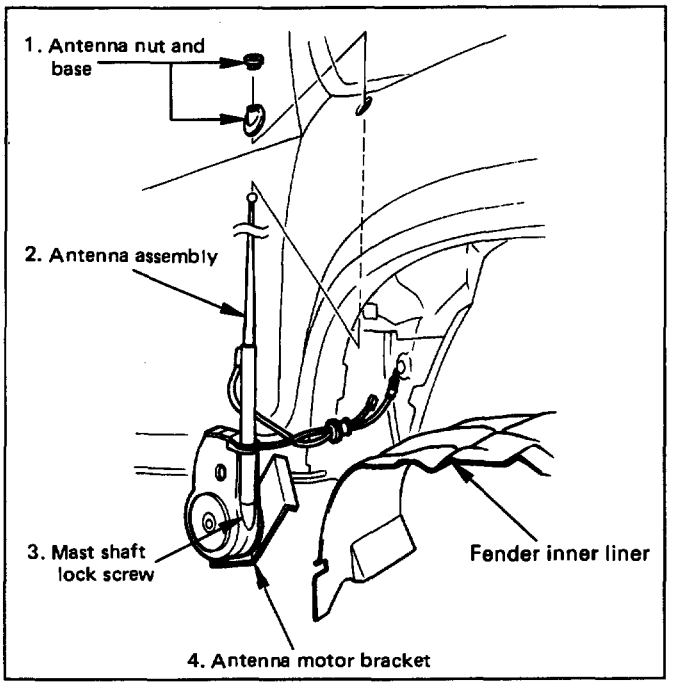

Fig. 9A-9

1. **Antenna nut and base**
   - Remove the antenna motor bracket from the inner fender.
   - To fully extend the mast, turn stater switch to "ON" and turn on the radio.
2. **Antenna assembly**
   - Disconnect the antenna motor connector and feeder cord connector.
   - Turn starter switch to "OFF".
   - Remove the antenna assembly from the vehicle.
3. **Mast shaft lock screw.**
4. **Antenna motor bracket**

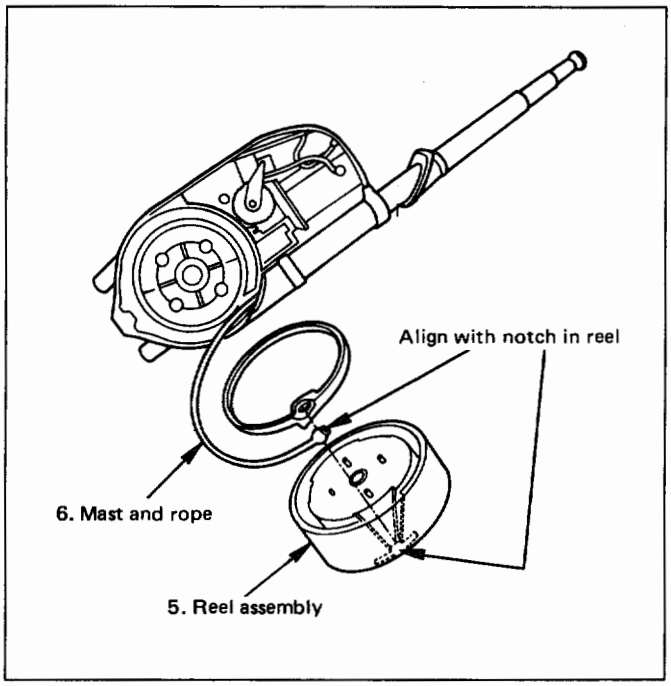

Fig. 9A-10

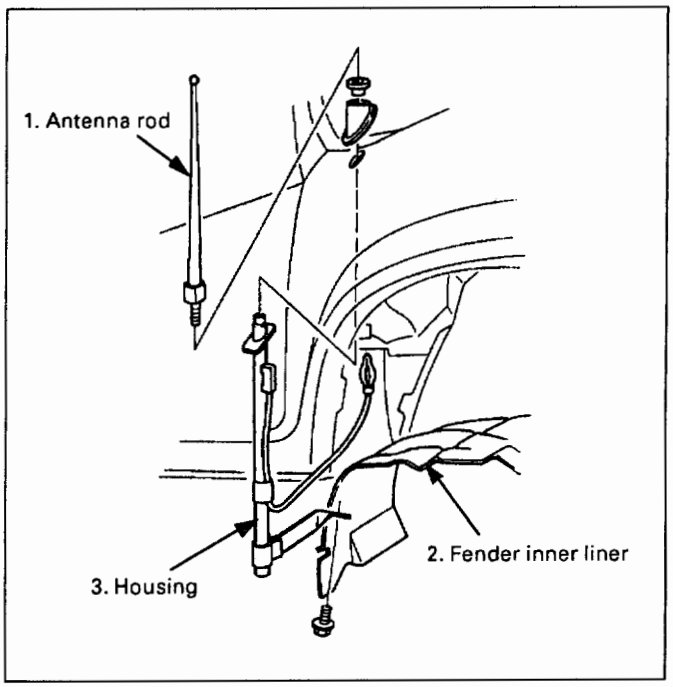

Fig. 9A-11

5. **Reel assembly**
6. **Mast and rope**
   - Remove the rope from the reel assembly.
   - Discard mast and rope.

INSTALLATION

To install, follow the removal steps in the reverse order, noting the following points:

1. Install the new mast through the shaft. Connect the motor reel, and wind the rope around the reel.
2. Reinstall the reel assembly, mast shaft, motor cover and bracket.
3. Reinstall and reconnect the power antenna assembly.
4. Check for proper antenna operation.

ROD TYPE ANTENNA

REMOVAL (FIG. 9A-11)

Preparation: Disconnect the battery ground cable.

1. **Antenna Rod**
   - Turn the antenna rod counterclockwise.
2. **Fender Inner liner**
   - Remove three screws and nine clips.
3. **Housing**
   - Disconnect the feeder cord connector at the inside of the vehicle. (Fig. 9A-7)
   - Remove housing bracket screw.
   - Turn the lock nut counterclockwise, to remove it together with base mold.

INSTALLATION

To install, follow the removal steps in the reverse order.

RADIO

REMOVAL (FIG. 9A-12)

Preparation: Disconnect the battery ground cable.

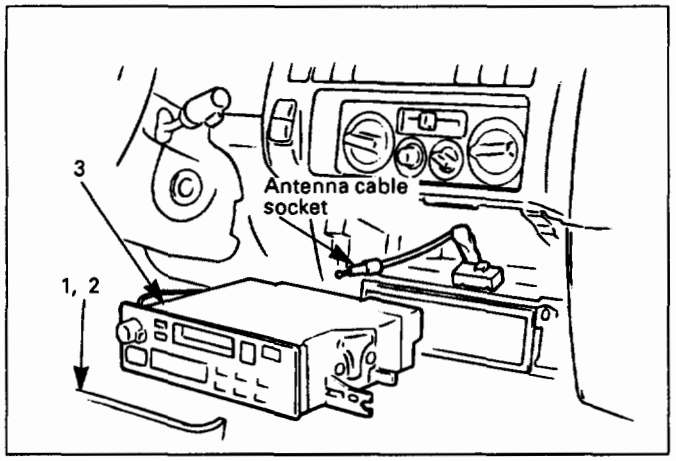

Fig. 9A-12

1. **Front console assembly**
2. **Lower cluster assembly**
   - Refer to FOG LIGHT SWITCH removal steps in section 8 CHASSIS ELECTRICAL
3. **Radio**
   - Remove two screws.
   - Disconnect the connector.
   - Disconnect the antenna cable socket.

INSTALLATION

To install, follow the removal steps in the reverse order.

SPEAKER

REMOVAL (FIG. 9A-13)

Preparation: Disconnect the battery ground cable. (Fig. 9A-13)

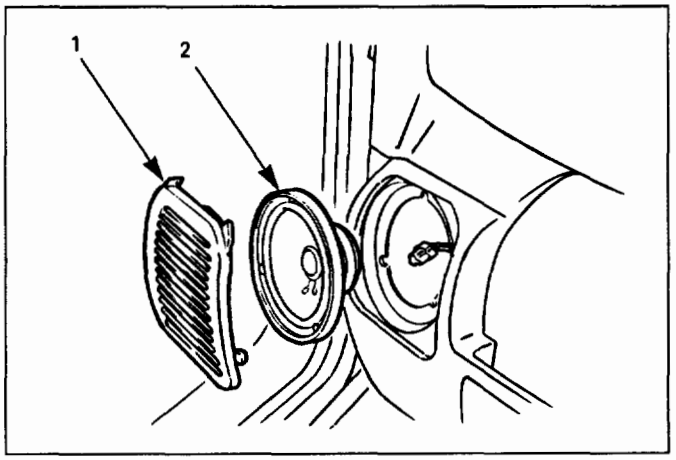

Fig. 9A-13

1. **Speaker grille**
   - Pull the grille to release the locks.
2. **Speaker**
   - Remove four screws.
   - Disconnect the connector.

INSTALLATION

To install, follow the removal steps in the reverse order.

TWEETER ASSEMBLY

REMOVAL (FIG. 9A-14)

Preparation: Disconnect the battery ground cable.

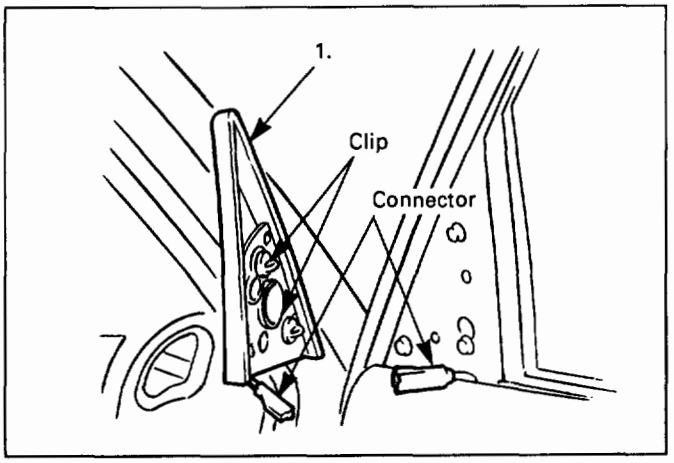

Fig. 9A-14

1. **Tweeter assembly**
   - Hold the tweeter assembly and pull it to release the clips.
   - Disconnect the connector..

INSTALLATION

To install, follow the removal steps in the reverse order.

MEMO

SECTION 9B

CRUISE CONTROL

CONTENTS

General description 9B-1
Parts location 9B-3
Circuit diagram 9B-4
Diagnosis 9B-7
On-vehicle service 9B-28
Brake switch adjustment 9B-28
Clutch switch adjustment 9B-28
Actuator cable adjustment 9B-28
Starter switch 9B-28
Cruise control main switch 9B-30
Cruise control switch (combination switch) 9B-31
Cruise control unit 9B-32
Pump & actuator 9B-34
Brake switch 9B-36
Clutch switch 9B-36
Mode switch 9B-37
Vehicle speed sensor (incorporated in speedometer) 9B-38
Diode 9B-38
Cruise control main relay 9B-39

GENERAL DESCRIPTION

The circuit consists of the starter switch, cruise control main switch, cruise control switch, cruise control unit, pump & actuator, brake switch, clutch switch (M/T), mode switch (A/T), vehicle speed sensor (incorporated into the speedometer) and indicator light.
The cruise control keeps the vehicle running at a fixed speed until a signal canceling this fixed speed is received. When the main switch "AUTO CRUISE" is turned on with the vehicle in the running mode, the battery voltage is applied to the control unit. When a signal from the control switch is input to the control unit while the vehicle is in this state, the cruise control actuator is activated to operate the system.
Also, while the system is operating, the "AUTO CRUISE" indicator light in the indicator box lights up.

1. SET/COAST SWITCH FUNCTION

1) **SET function:** When the SET/COAST switch is pressed and released with the main switch on, the speed at which the vehicle is running at that moment is stored in the memory, and the vehicle automatically runs at the speed stored.
2) **COAST-DOWN function:** When the SET/COAST switch is kept on while the vehicle in running, the vehicle decelerates during that time. The speed at which vehicle is running when the control switch is turned off is stored in the memory, and the vehicle automatically returns to the stored speed.
3) **Tap-down function:** When the SET/COAST switch is turned on and off instantaneously while the vehicle is running, the vehicle decelerates a mile for each on/off operation. The vehicle speed at which the vehicle was running when the SET/COAST was turned off last is stored in the memory, and the vehicle automatically returns to this stored speed.

2. RESUME/ACCEL SWITCH FUNCTION

1) **Resume function:** When the RESUME/ACCEL switch is turned on/off after the system is temporarily deactivated by pressing the brake or clutch pedal while the vehicle is running, the vehicle resumes. The speed stored before the system was released.
2) **Accelerate function:** When the RESUME/ACCEL switch is kept on after the system is released completely, the vehicle accelerates its speed during that time. The vehicle speed at which the vehicle was running when the switch was turned off is stored in the memory, and the vehicle automatically returns to this speed.
3) **Tap-up function:** When the RESUME/ACCEL switch is turned on and off instantaneously while the vehicle is running, the vehicle decelerates a mile for each on/off operation. The vehicle speed at which the vehicle was running when the switch was turned off last is stored in the memory, and the vehicle automatically returns to this stored speed.

3. CANCEL FUNCTION

1) Temporary cancellation:

- When the brake pedal is pressed.
- When the clutch pedal is pressed. (M/T)
- When the select lever is shifted to any position other than "D", "3", "2" or "L". (A/T)
- When the cancel switch is operated.
- When the vehicle speed exceeds about 12.5mph over the vehicle speed stored in the memory.
- Turning the RESUME/ACCEL switch will return the vehicle to the speed stored in the cruise control memory.

2) Complete cancellation:

- When the starter switch or the main switch is turned off.
- When the fail-safe function is activated.
- When the vehicle speed is about 24mph.

PARTS LOCATION

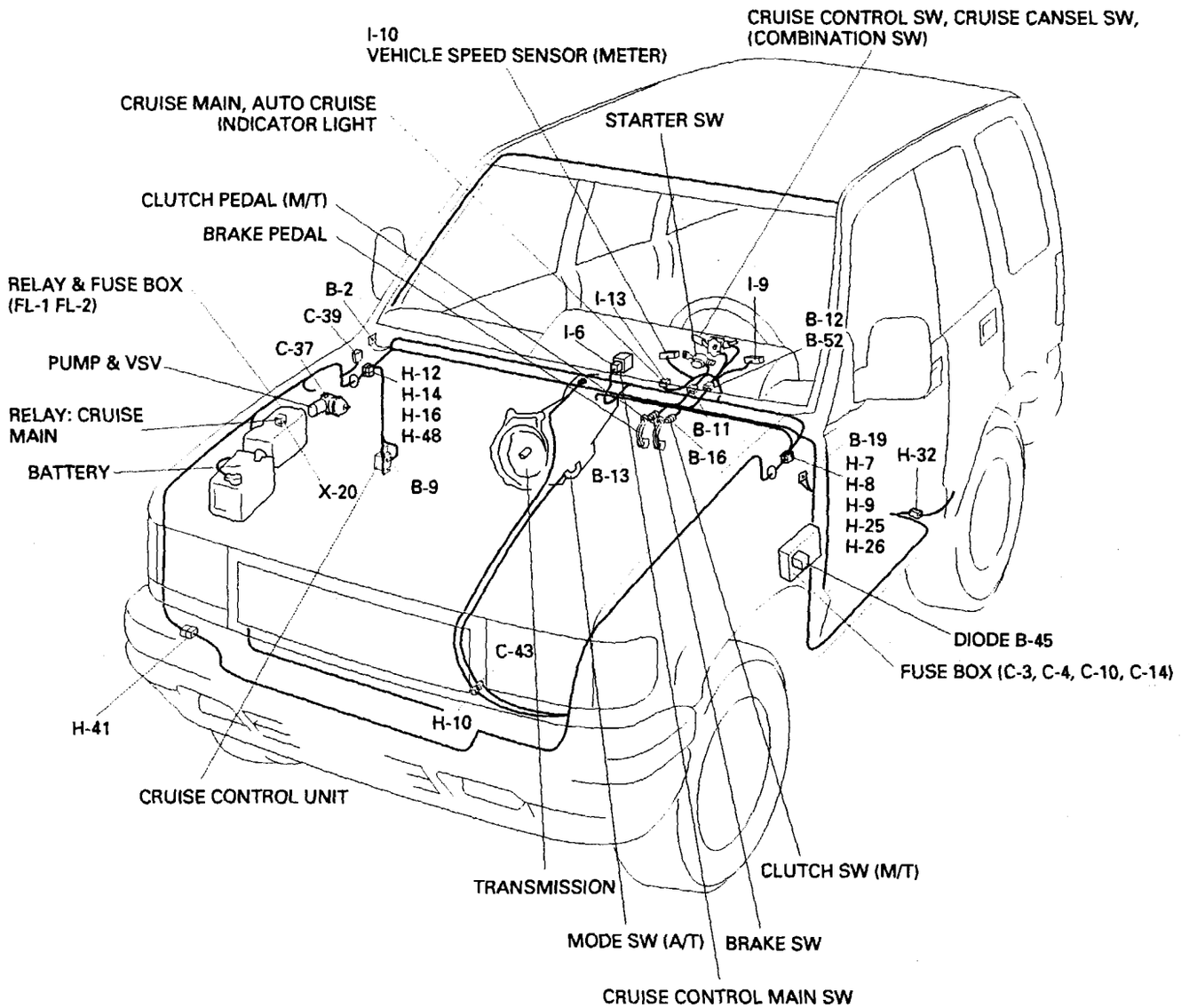

Fig. 9B-1

CIRCUIT DIAGRAM

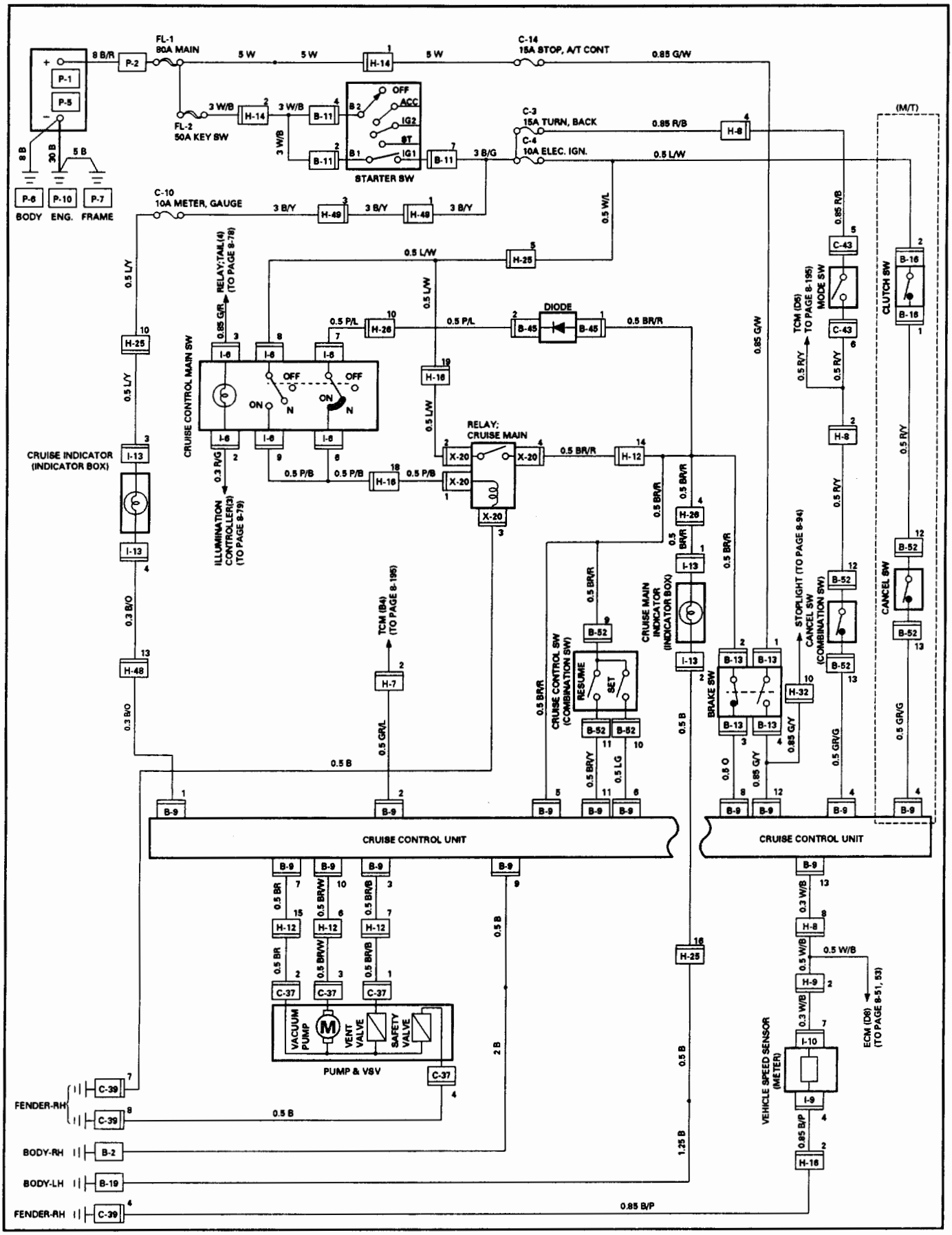

Fig. 9B-2

CONNECTOR LIST

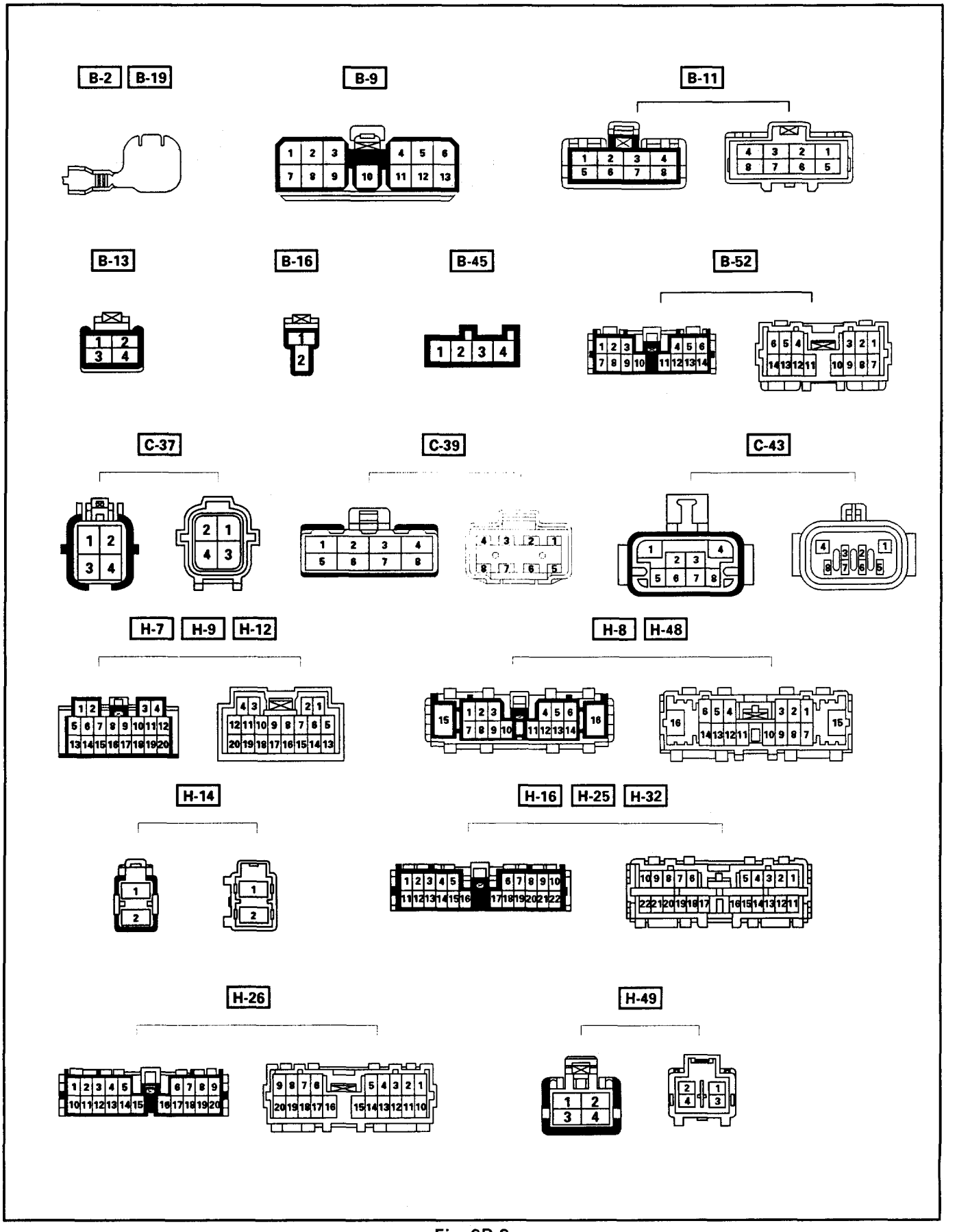

Fig. 9B-3

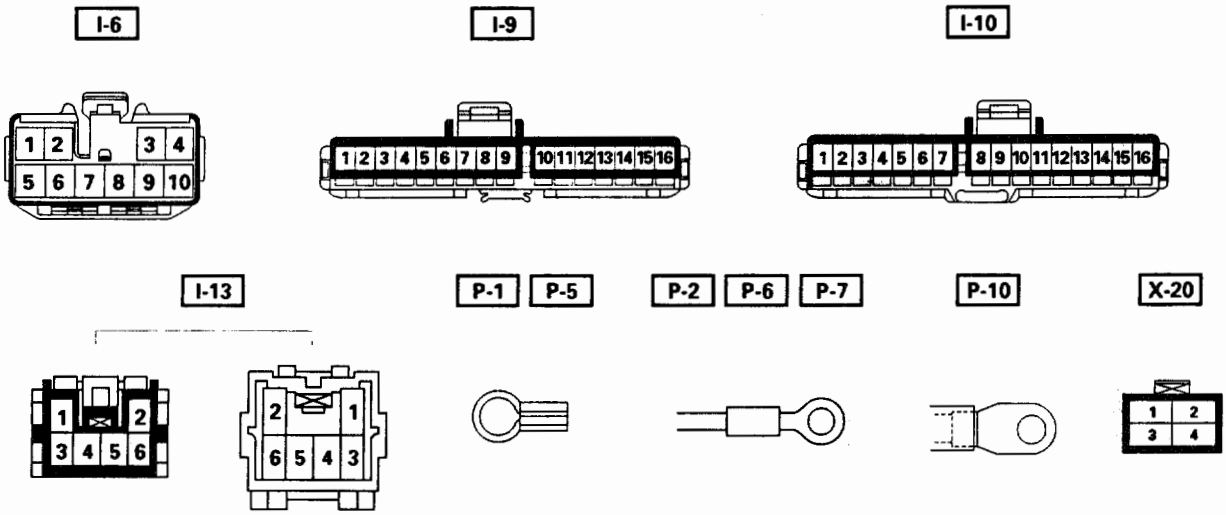
I-6
1 2 3 4
5 6 7 8 9 10
I-9
1 2 3 4 5 6 7 8 9 10 11 12 13 14 15 16
I-10
1 2 3 4 5 6 7 8 9 10 11 12 13 14 15 16
I-13
1 2
3 4 5 6
2 1
6 5 4 3
P-1
P-5
P-2
P-6
P-7
P-10
X-20
1 2
3 4

Fig. 9B-4

DIAGNOSIS

QUICK CHART FOR CHECK POINTS

Trouble mode \ Check point	Fuse C-4 (10A)	Fuse C-10 (10A)	Cruise control main relay	Cruise control unit	Main switch	SET/COAST switch	RESUME/ACCEL switch	Clutch switch	Brake switch	Pump & actuator	Vehicle speed sensor (incorporated into speedometer)	Vacuum hose	Indicator bulb	Acelerator cable	Actuator	Mode switch	Transmission control module	Cable harness
1. Cruise control inoperative	○ (1)		○ (2)	○ (12)	○ (3)	○ (4)		○ (5)	○ (6)	○ (7)	○ (8)	○ (9)			○ (10)			○ (11)
2. Cruise speed unstable				○ (5)						○ (3)	○ (1)	○ (2)		○ (6)	○ (4)			
3. Cruise control cancels				○ (5)				○ (1)	○ (2)	○ (4)	○ (3)							
4. RESUME inoperative				○ (3)			○ (1)											○ (2)
5. ACCEL or TAP-UP inoperative				○ (3)			○ (1)											○ (2)
6. COAST or TAP-DOWN inoperative				○ (2)		○ (1)												○ (3)
7. Cruise control cancel				○ (4)				○ (1)	○ (2)							○ (3)		
8. Cruise control does not operate to kick down from O/D to 3rd, when cruising speed is less than approximately 3 mph or more from preset speed (A/T). However, avoid the O/D cancel in the following conditions: 1) When the cruising speed is 75 mph or more during the Accelerate function. 2) When accelerated from the speed at 70 mph. 3) When the cruising speed is 75 mph or more during the Resume function. 4) When the memory speed is less than 3 mph during the Resume function. 5) When resumed from the memory speed at 6 mph or less. 6) While in the Tap-up function.																	○ (2)	○ (1)
9. Indicator light does not light		○ (1)		○ (4)									○ (2)					○ (3)

NOTE: Figure in parenthesis "( )" indicates the order of inspection.

QUICK CHART FOR POSSIBLE CAUSE

1. Cruise control inoperative

CHECK POINTS	POSSIBLE CAUSE	COUNTERMEASURE
Fuse C-4 (10A)	Burned out	Replace
Cruise control main relay	Defective circuit inside relay	Replace
Main switch	Contact point does not switch to ON	Repair or replace
SET/COAST SW	Contact point does not switch to ON	Refer to cruise control SW inspection
Clutch switch (M/T)	Contact point does not switch to ON	Refer to clutch SW inspection
Brake switch	Normal close side of point does not switch to ON	Refer to brake SW inspection
Pump & VSV	Defective valve or vacuum pump (inoperative)	Replace
Vehicle speed sensor	Open or short circuit	Refer to speedometer inspection
Vacuum hose	Disconnected, Bent, Crack, Crush	Repair or Replace
Actuator	Restriction or out of link	Repair or Replace
Cable harness	Disconnected connector, Open circuit	Repair
Cruise control unit	Defective circuit inside control unit	Replace

2. Cruise speed unstable

CHECK POINTS	POSSIBLE CAUSE	COUNTERMEASURE
Vehicle speed sensor	Open or short circuit	Refer to speedometer inspection
Vacuum hose	Disconnected, Bent, Cracked, Crushed	Repair or Replace
Pump & VSV	Defective valve (leakage)	Replace
Actuator	Restriction, defective or disconnected	Repair or Replace
Cruise control unit	Defective circuit inside control unit	Replace
Accelerator cable	Incorrect free play of accelerator pedal	Readjust

3. Cruise control cancels

CHECK POINTS	POSSIBLE CAUSE	COUNTERMEASURE
Clutch switch (M/T)	Unstable point contact Incorrect switch position Clutch pedal does not return fully	Replace Readjust Check and repair return spring
Brake switch	Unstable normal close point contact Incorrect switch position Brake pedal does not return fully	Replace Readjust Check and repair return spring
Car speed sensor	Open or short circuit	Refer to speedometer inspection
Pump & VSV	Defective valve (leakage)	Replace
Cruise control unit	Defective circuit inside control unit	Replace

4. RESUME inoperative
5. ACCEL or TAP-UP inoperative

CHECK POINTS	POSSIBLE CAUSE	COUNTERMEASURE
Resume switch	Contact point does not switch to ON	Refer to cruise control SW inspection
Cable harness	Open circuit for resume switch circuit	Repair
Cruise control unit	Defective circuit inside control unit	Replace

6. COAST or TAP-DOWN inoperative

CHECK POINTS	POSSIBLE CAUSE	COUNTERMEASURE
SET/COAST SW	Poor point contact	Refer to cruise control SW inspection
Cruise control unit	Defective circuit inside control unit	Replace
Cable harness	Open circuit for coast switch circuit	Repair

7. Cruise control does not cancel

CHECK POINTS	POSSIBLE CAUSE	COUNTERMEASURE
Clutch switch	Point does not switch to OFF	Replace
Brake switch	Normal close point does not switch to OFF Normal open point does not switch to ON	Replace
Mode switch	Point does not switch to OFF	Repair or replace
Cruise control unit	Defective citcuit inside control unit	Replace
Transmission Control Module (TCM)	Open circuit for TCM or defective circuit inside control unit	Refer to Section 7A1

8. Cruise control does not operate to kick down from O/D to 3rd, when cruising speed is less than approximately 3 mph or more from preset speed (A/T)

CHECK POINTS	POSSIBLE CAUSE	COUNTERMEASURE
TCM	Defective circuit inside TCM	Refer to Section 7A1
Cable harness	Open circuit for TCM	Repair

9. Indicator light does not light

CHECK POINTS	POSSIBLE CAUSE	COUNTERMEASURE
Fuse C-10 (10A)	Burned out	Replace
Indicator bulb	Bulb filament burned out	Replace
Cable harness	Disconnected connector, Open circuit	Repair
Cruise control unit	Defective circuit inside control unit	Replace

1. CHECKING PROCEDURE OF THE CRUISE CONTROL POWER CIRCUIT (CHART 1)

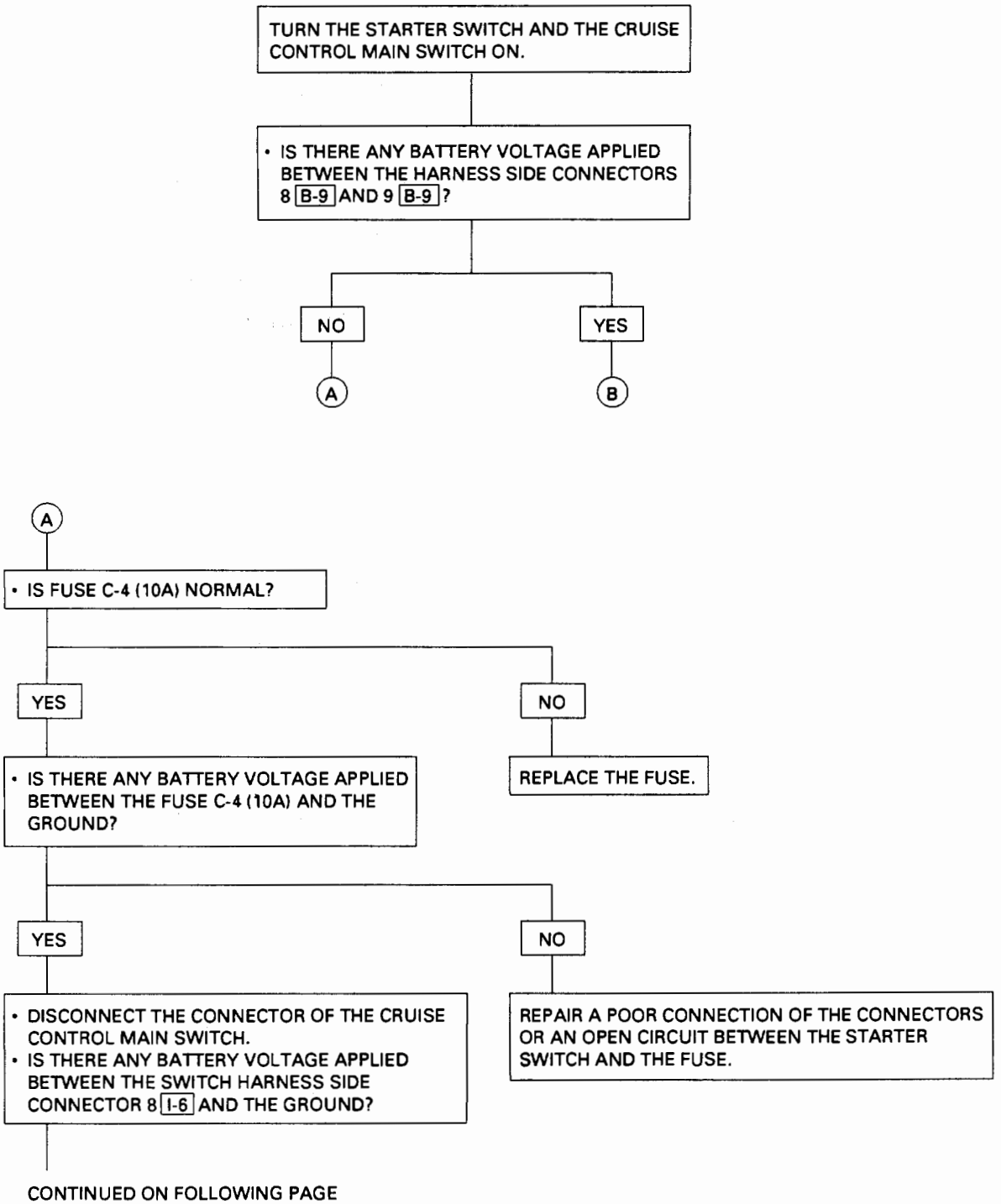

CONTINUED ON FOLLOWING PAGE

CONTINUED FROM PREVIOUS PAGE

- IS THE CONTINUITY IN THE CRUISE CONTROL MAIN SWITCH NORMAL?
  - YES → REMOVE THE CRUISE MAIN RELAY. IS THE RELAY NORMAL?
    - YES → IS THERE ANY BATTERY VOLTAGE APPLIED BETWEEN THE CRUISE MAIN RELAY HARNESS SIDE CONNECTOR 2 [X-20] AND GROUND?
      - YES → REINSTALL THE CRUISE CONTROL MAIN SWITCH. IS THERE ANY BATTERY VOLTAGE APPLIED BETWEEN 1 [X-20] AND THE GROUND?
        - YES → IS THERE CONTINUITY BETWEEN THE HARNESS SIDE CONNECTORS 4 [X-20] AND 7 [I-6] ?
          - YES → CONTINUED ON FOLLOWING PAGE
          - NO → REPAIR A POOR CONNECTION OF CONNECTORS OR AN OPEN CIRCUIT BETWEEN 9 [I-6] (6 [I-6]) AND 1 [X-20]
        - NO → REPAIR A POOR CONNECTION OF THE CONNECTORS OR AN OPEN CIRCUIT BETWEEN THE FUSE C-4 (10A) AND 2 [X-20].
      - NO → REPAIR OR REPLACE THE RELAY.
    - NO → REPAIR OR REPLACE THE SWITCH.
  - NO → REPAIR A POOR CONNECTION OF THE CONNECTORS OR AN OPEN CIRCUIT BETWEEN THE FUSE C-4 (10A) AND 8 [I-6].

CONTINUED FROM PREVIOUS PAGE

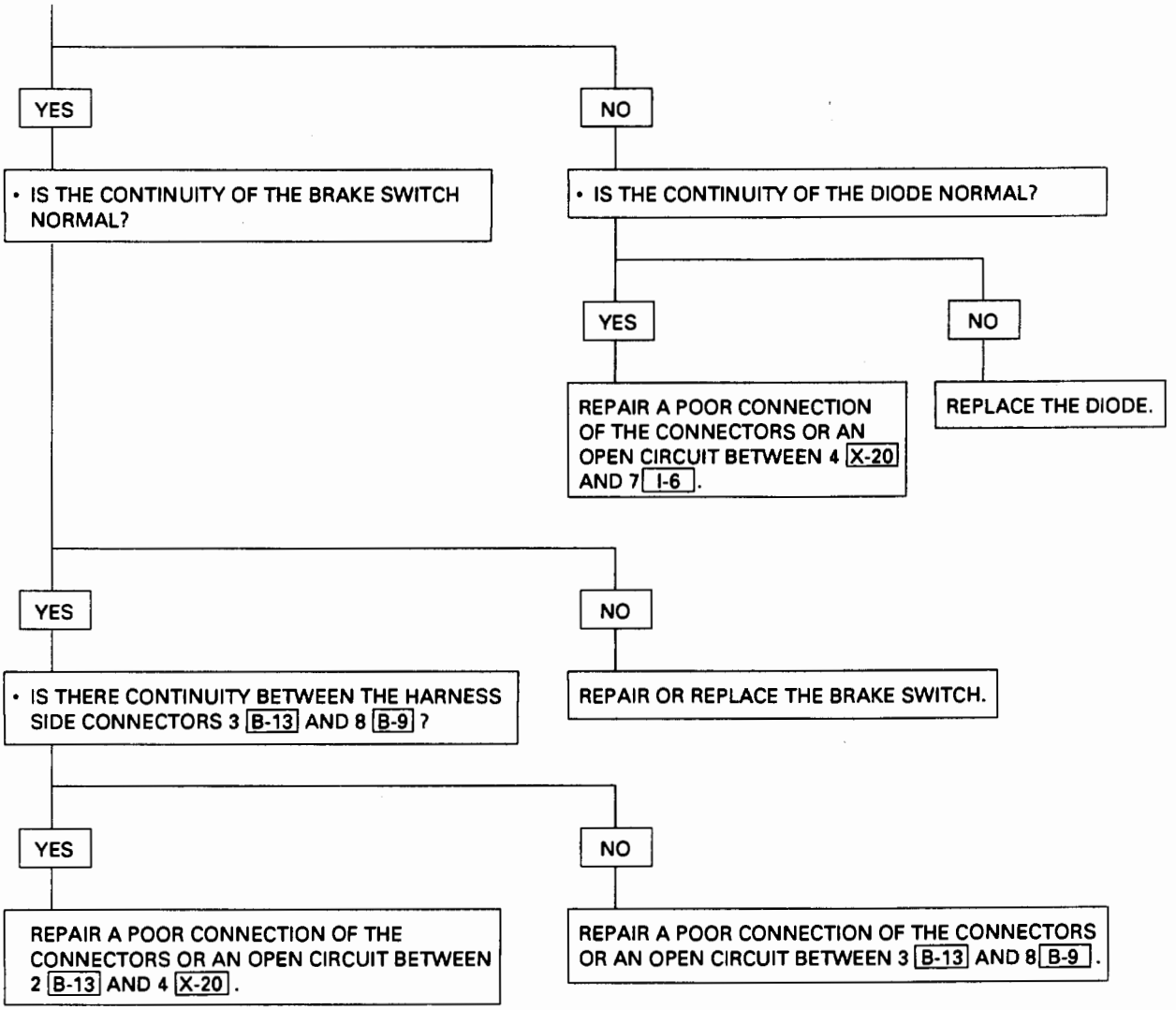

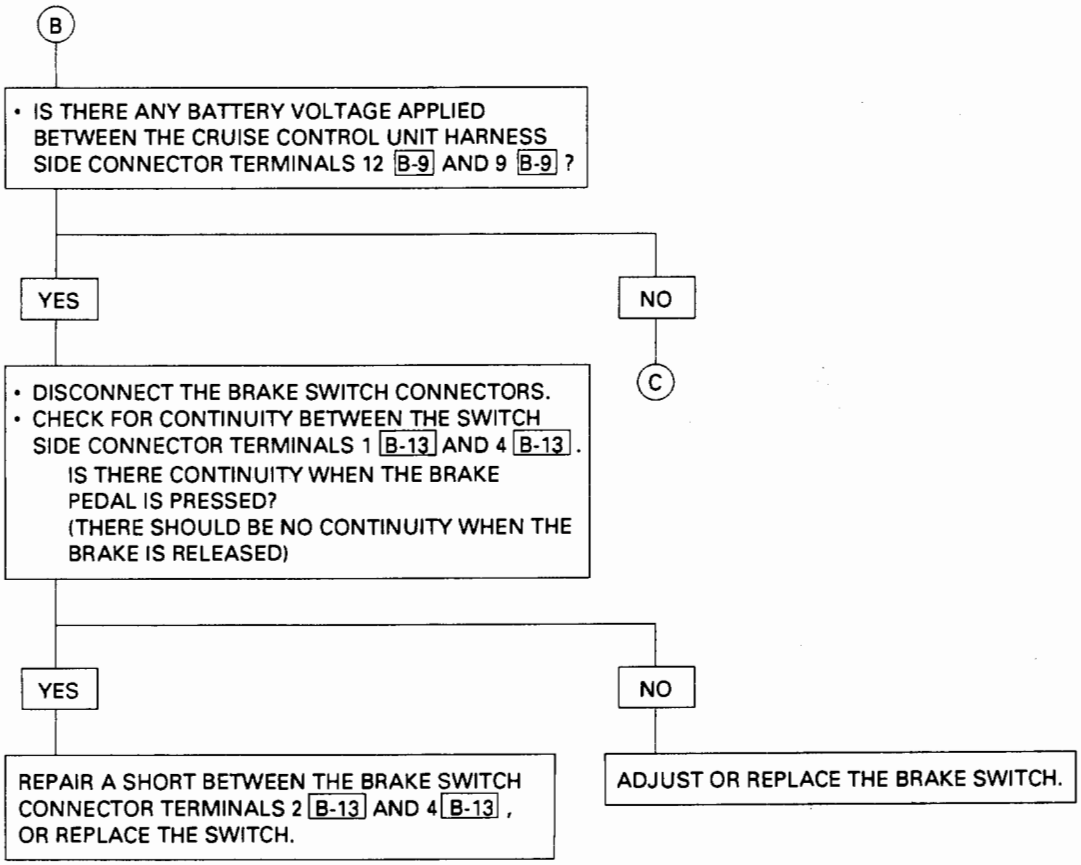
B
• IS THERE ANY BATTERY VOLTAGE APPLIED BETWEEN THE CRUISE CONTROL UNIT HARNESS SIDE CONNECTOR TERMINALS 12 B-9 AND 9 B-9 ?
YES
NO
C
• DISCONNECT THE BRAKE SWITCH CONNECTORS.
• CHECK FOR CONTINUITY BETWEEN THE SWITCH SIDE CONNECTOR TERMINALS 1 B-13 AND 4 B-13 .
IS THERE CONTINUITY WHEN THE BRAKE PEDAL IS PRESSED?
(THERE SHOULD BE NO CONTINUITY WHEN THE BRAKE IS RELEASED)
YES
NO
REPAIR A SHORT BETWEEN THE BRAKE SWITCH CONNECTOR TERMINALS 2 B-13 AND 4 B-13 , OR REPLACE THE SWITCH.
ADJUST OR REPLACE THE BRAKE SWITCH.

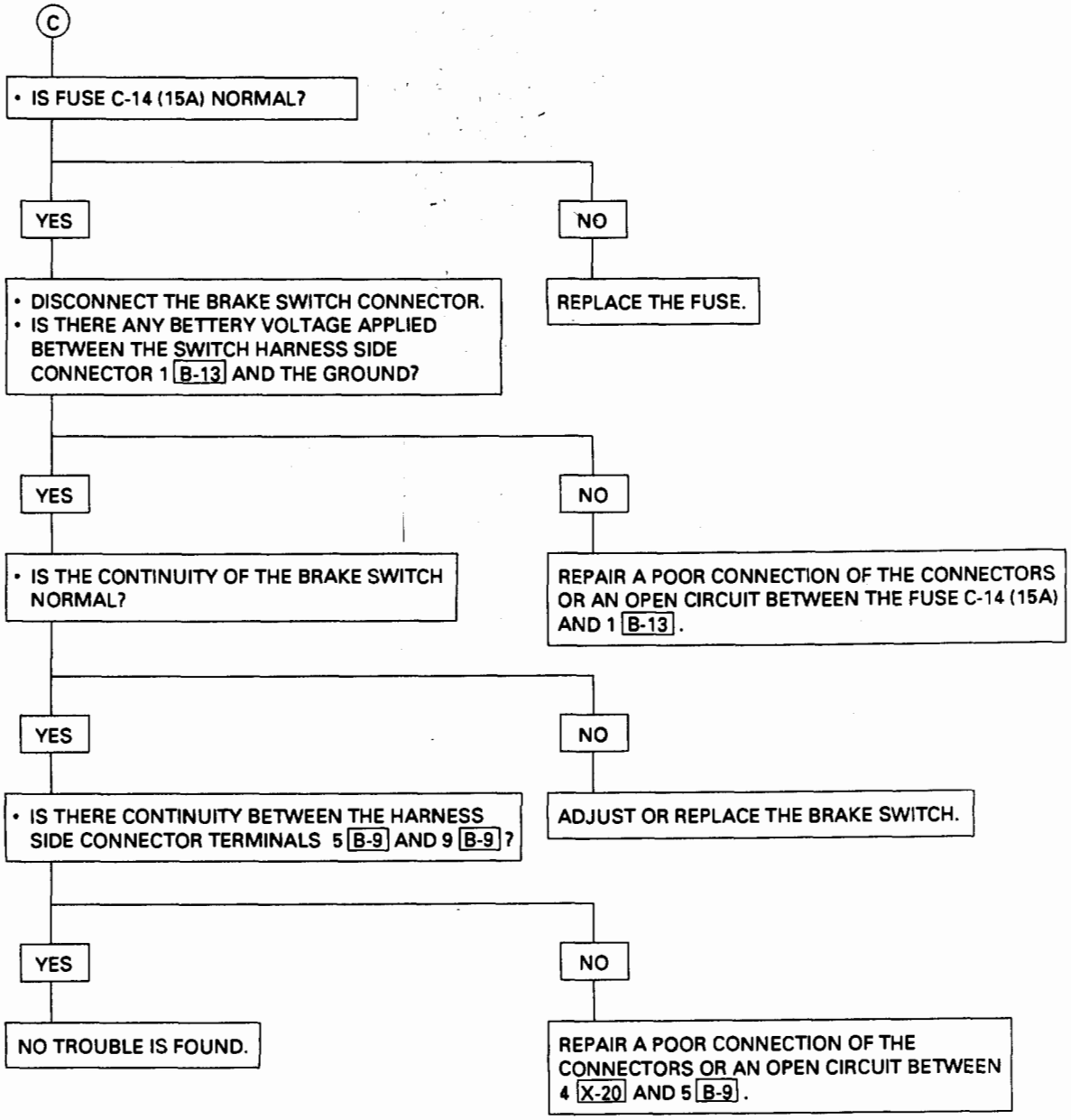
C
• IS FUSE C-14 (15A) NORMAL?
YES
NO
REPLACE THE FUSE.
• DISCONNECT THE BRAKE SWITCH CONNECTOR.
• IS THERE ANY BETTERY VOLTAGE APPLIED BETWEEN THE SWITCH HARNESS SIDE CONNECTOR 1 B-13 AND THE GROUND?
YES
NO
REPAIR A POOR CONNECTION OF THE CONNECTORS OR AN OPEN CIRCUIT BETWEEN THE FUSE C-14 (15A) AND 1 B-13.
• IS THE CONTINUITY OF THE BRAKE SWITCH NORMAL?
YES
NO
ADJUST OR REPLACE THE BRAKE SWITCH.
• IS THERE CONTINUITY BETWEEN THE HARNESS SIDE CONNECTOR TERMINALS 5 B-9 AND 9 B-9 ?
YES
NO
NO TROUBLE IS FOUND.
REPAIR A POOR CONNECTION OF THE CONNECTORS OR AN OPEN CIRCUIT BETWEEN 4 X-20 AND 5 B-9.

2. CRUISE SPEED CANNOT BE SET. (CHART 2)

- DISCONNECT THE CONNECTOR OF THE CRUISE CONTROL SWITCH (COMBINATION SWITCH).
- TURN THE STARTER SWITCH AND CRUISE CONTROL MAIN SWITCH ON.
- IS THERE ANY BATTERY VOLTAGE APPLIED BETWEEN THE CRUISE CONTROL SWITCH HARNESS SIDE CONNECTOR 9 B-52 AND THE GROUND?

YES

- CHECK THE FOLLOWING:
  - Ⓐ INSPECTION OF THE PUMP & VSV AND THE CIRCUIT
  - Ⓑ INSPECTION OF THE CRUISE CONTROL SWITCH AND THE CIRCUIT
  - Ⓒ INSPECTION OF THE MODE SWITCH, CANCEL SWITCH (A/T) CLUTCH SWITCH, CANCEL SWITCH (M/T) AND CIRCUIT
  - Ⓓ INSPECTION OF THE VEHICLE SPEED SENSOR AND CIRCUIT
  - Ⓔ INSPECTION OF THE GROUND CIRCUIT OF THE CRUISE CONTROL UNIT.
- ARE THE RESULTS OF INSPECTION NORMAL?

YES

IF NO TROUBLE IS FOUND, REPLACE THE CRUISE CONTROL UNIT

NO

CHECK THE POWER CIRCUIT AND REPAIR IT IF NECESSARY. (REFER TO CHART 1)

VSV: VACUUM SWITCHING VALVE

Ⓐ INSPECTION OF THE PUMP & VSV, AND THE CIRCUIT

- DOES THE ACTUATOR CABLE FUNCTION CORRECTLY?

YES

- DISCONNECT THE CONNECTOR OF THE PUMP & VSV.
- WITH THE PUMP & ACTUATOR SIDE CONNECTOR 2 [C-37] CONNECTED TO THE BATTERY (+) TERMINAL AND THE CONNECTOR 3 [C-37] TO GROUND, IS THE OPERATING SOUND OF THE VACUUM PUMP HEARD?

NO

REPAIR OR REPLACE THE ACTUATOR CABLE.

YES

- DISCONNECT THE VACUUM HOSE FROM THE ACTUATOR.
- CONNECT 2 [C-37] TO THE BATTERY (+) TERMINAL, AND 3 [C-37], 1 [C-37] AND 4 [C-37] TO GROUND.
- IS THERE ANY NEGATIVE PRESSURE APPLIED TO THE VACUUM HOSE?

NO

REPLACE THE VACUUM PUMP.

YES

- CONNECT THE VACUUM HOSE TO THE ACTUATOR.
- CONNECT 2 [C-37] TO THE BATTERY (+) TERMINAL, AND 3 [C-37], 1 [C-37] AND 4 [C-37] TO THE GROUND.
- DOES THE ENGINE THROTTLE OPERATE CORRECTLY?

NO

- IS THE VACUUM HOSE NORMAL?

YES

REPLACE THE VACUUM PUMP.

NO

REPLACE THE VACUUM HOSE.

CONTINUED ON FOLLOWING PAGE

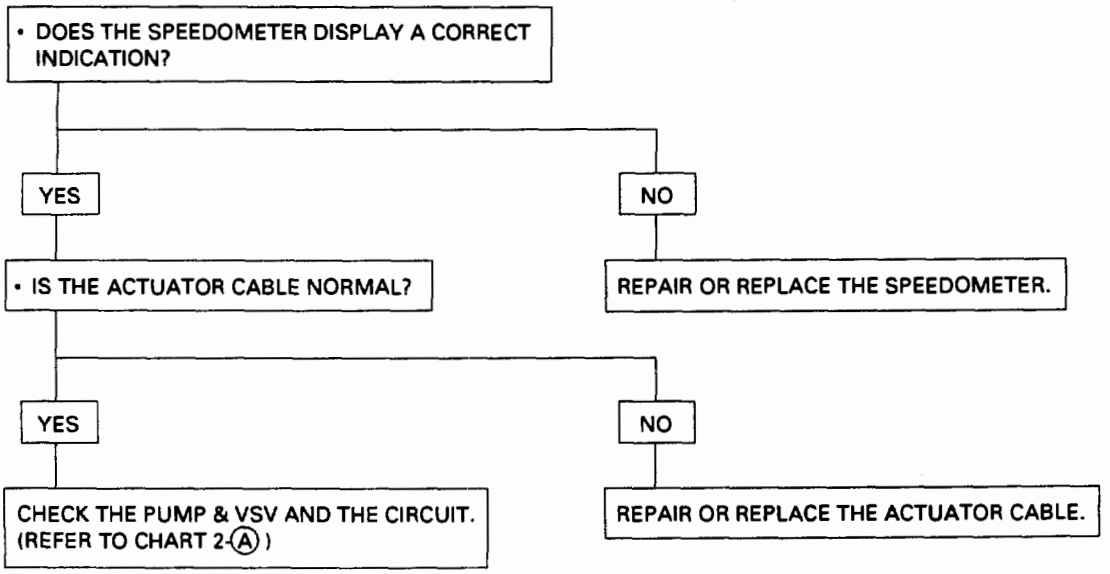
• DOES THE SPEEDOMETER DISPLAY A CORRECT INDICATION?
YES
NO
• IS THE ACTUATOR CABLE NORMAL?
REPAIR OR REPLACE THE SPEEDOMETER.
YES
NO
CHECK THE PUMP & VSV AND THE CIRCUIT. (REFER TO CHART 2-Ⓐ)
REPAIR OR REPLACE THE ACTUATOR CABLE.

Ⓑ INSPECTION OF THE CRUISE CONTROL SW AND THE CIRCUIT

- DISCONNECT THE CONNECTOR OF THE CRUISE CONTROL SWITCH.
- IS CONTINUITY BETWEEN THE SWITCH TERMINALS 9 [B-52] AND 10 [B-52] NORMAL?
  a) WHEN THE SET SWITCH ON
  ..... CONTINUITY
  b) WHEN THE SET SWITCH OFF
  ..... NO CONTINUITY

YES

- DISCONNECT THE CONNECTOR OF THE CRUISE CONTROL UNIT.
- IS THERE CONTINUITY BETWEEN THE HARNESS SIDE CONNECTOR TERMINALS 10 [B-52] AND 6 [B-9] ?

YES

NO TROUBLE IS FOUND.

NO

REPAIR A POOR CONNECTION OF THE CONNECTORS OR AN OPEN CIRCUIT BETWEEN 10 [B-52] AND 6 [B-9]

NO

REPAIR OR REPLACE THE SWITCH.

Ⓒ INSPECTION OF THE MODE SWITCH, CANCEL SWITCH (A/T), CLUTCH SWITCH (M/T) AND THE CIRCUIT

- IS THE FUSE C-3 (A/T) OR C-4 (M/T) NORMAL?

YES

- DISCONNECT THE CONNECTOR OF THE MODE SW (CLUTCH SWITCH).
- IS THERE BATTERY VOLTAGE APPLIED BETWEEN THE HARNESS SIDE CONNECTOR 5 [C-43] (2 [B-16]) AND THE GROUND WHEN STARTER SWITCH IS ON?

NO

REPLACE THE FUSE.

YES

- IS THE CONTINUITY IN THE MODE SWITCH (CLUTCH SW) NORMAL?

NO

REPAIR A POOR CONNECTION OF THE CONNECTORS OR AN OPEN CIRCUIT BETWEEN THE FUSE C-3 (15A) AND 5 [C-43], OR THE FUSE C-4 (10A) AND 2 [B-16].

YES

- DISCONNECT THE CONNECTOR OF THE CANCEL SWITCH.
- WHEN IN THE FOLLOWING CONDITIONS, IS THERE BATTERY VOLTAGE APPLIED BETWEEN THE SWITCH HARNESS SIDE CONNECTOR 12 [B-52] AND THE GROUND?
  (A/T): WHEN THE MODE SWITCH IS EITHER AT "D", "3", "2" OR "L" POSITION.
  (M/T): WHEN THE CLUTCH PEDAL RELEASED.

NO

REPAIR OR REPLACE THE SWITCH.

CONTINUED ON FOLLOWING PAGE

CONTINUED FROM PREVIOUS PAGE

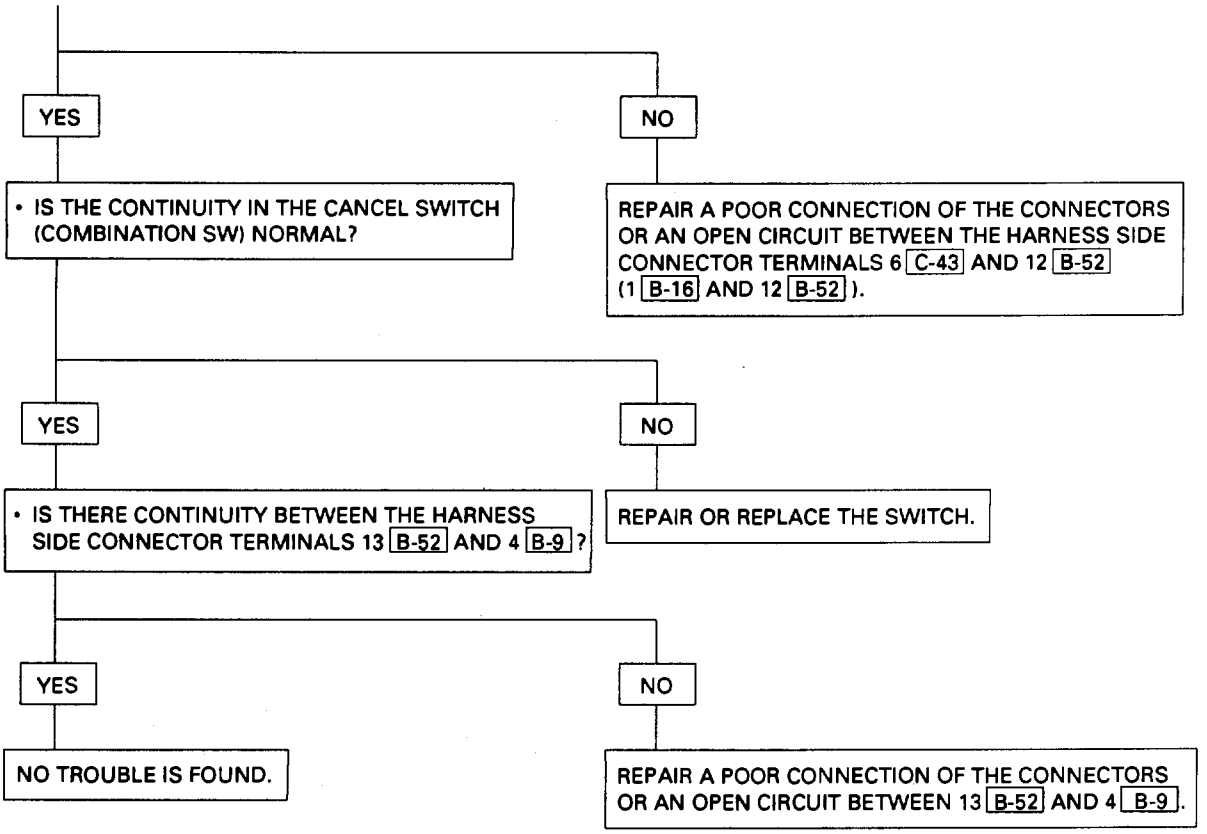

Ⓓ INSPECTION OF THE VEHICLE SPEED SENSOR AND THE CIRCUIT

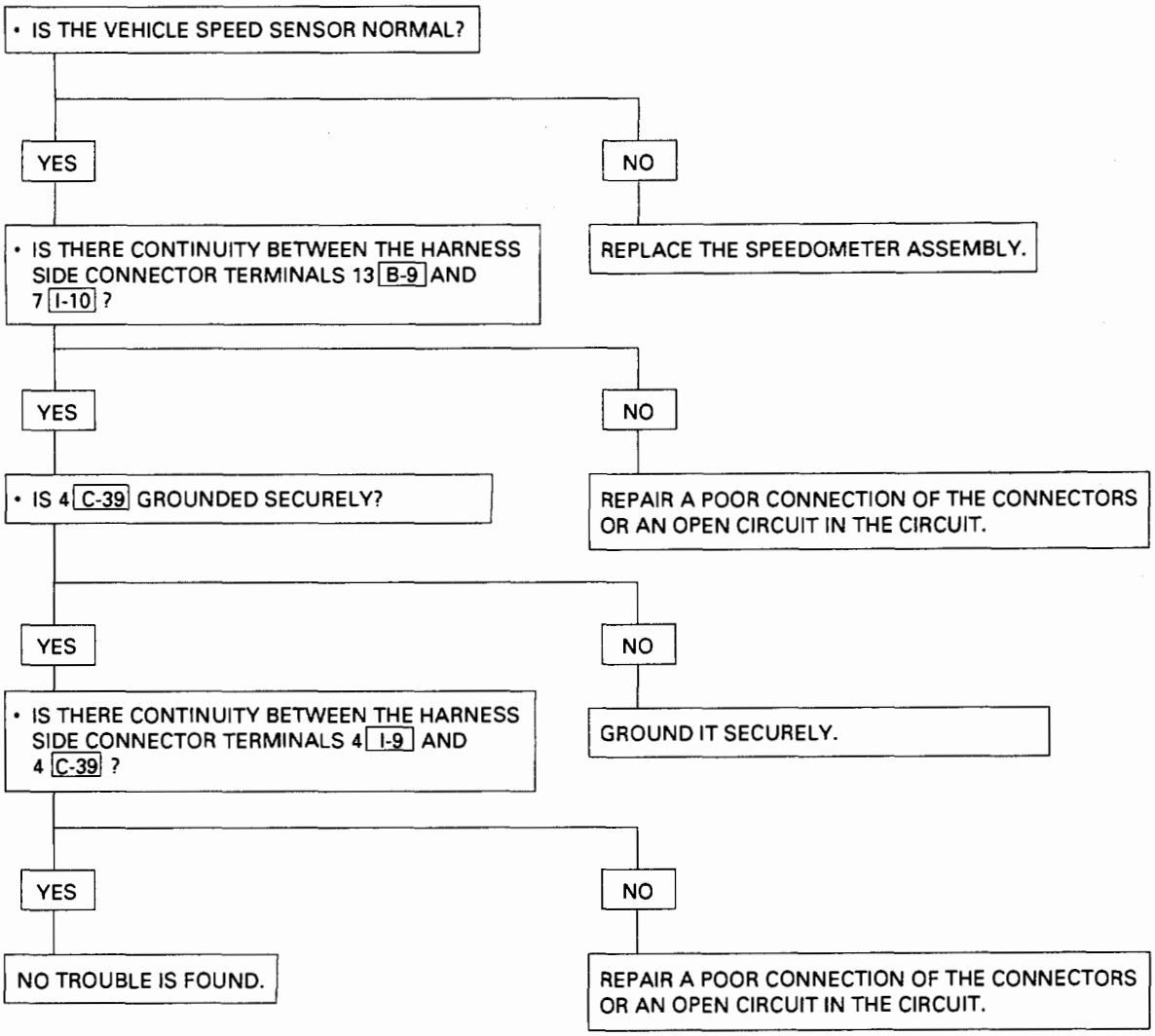

(E) INSPECTION OF THE GROUND CIRCUIT OF CRUISE CONTROL UNIT

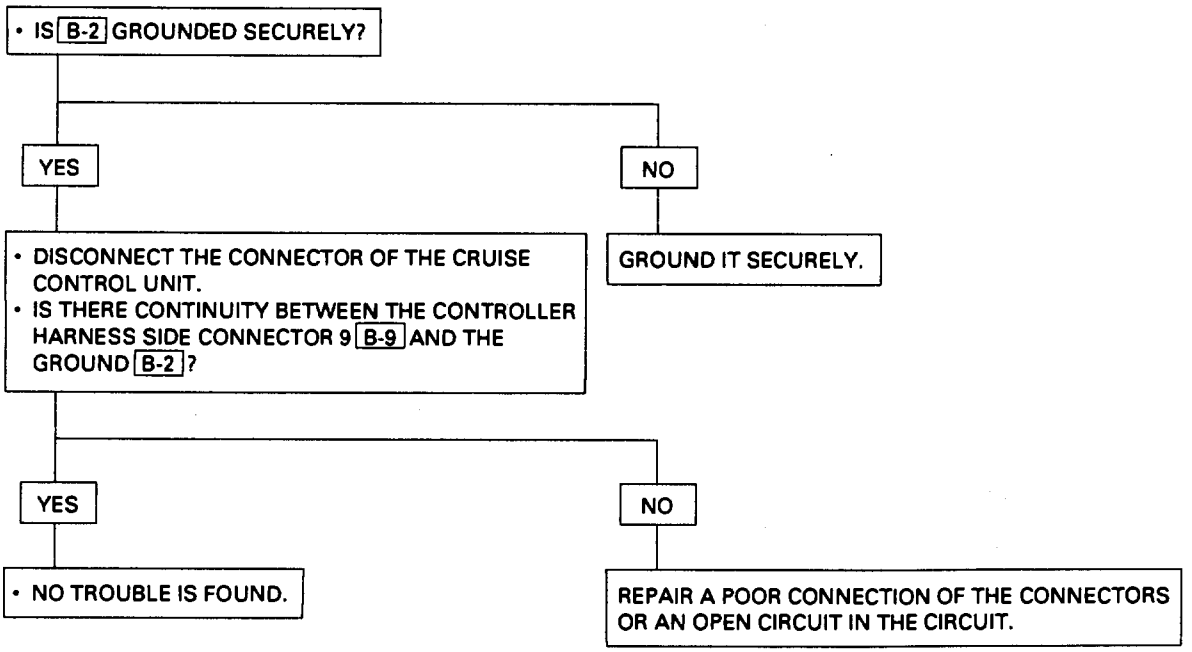

3. RESUME FUNCTION DOES NOT OPERATE (CHART 3)

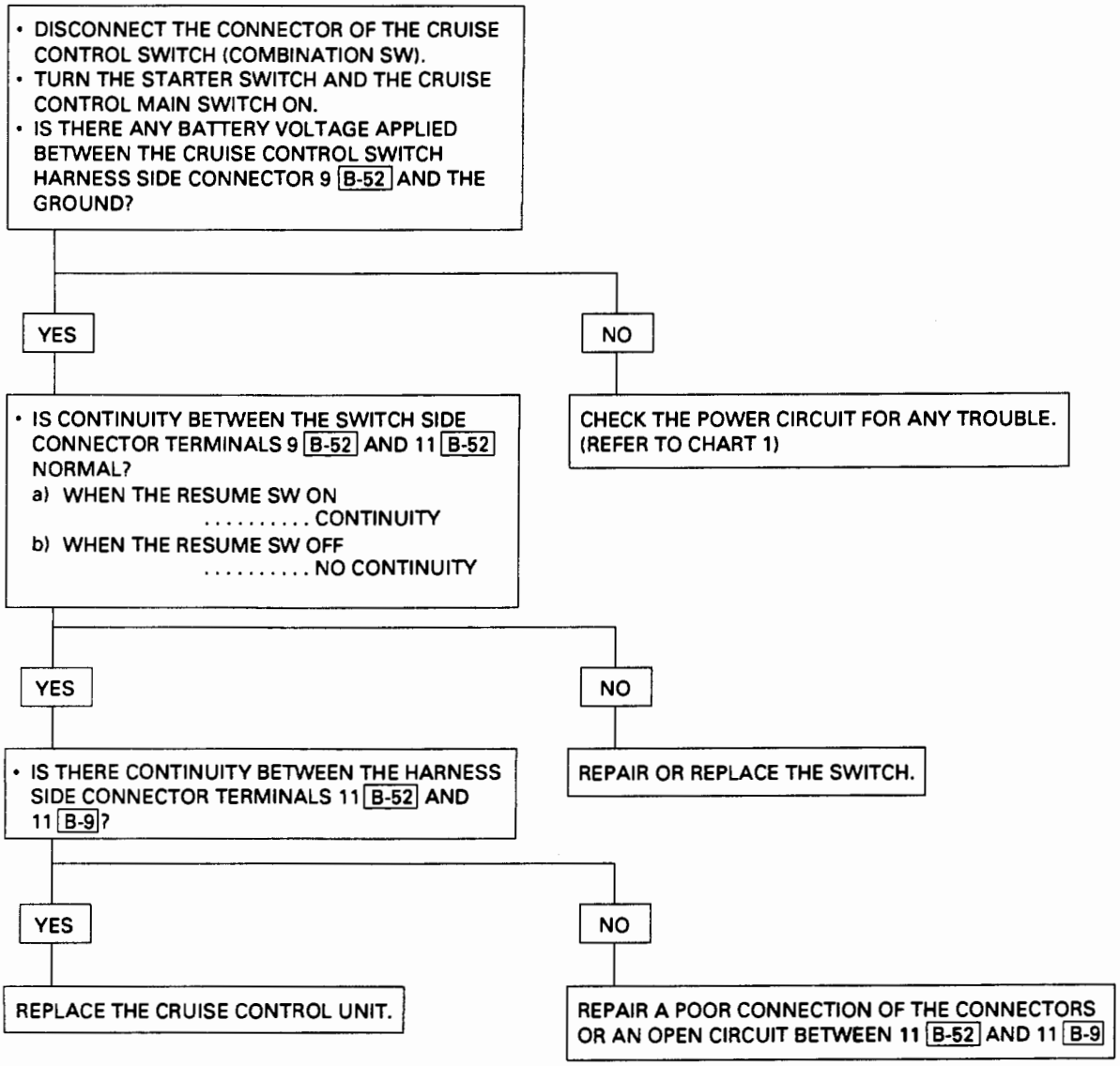

4. ACCELERATOR OR COAST (TAP-UP OR TAP-DOWN) FUNCTION DOES NOT OPERATE (CHART 4)

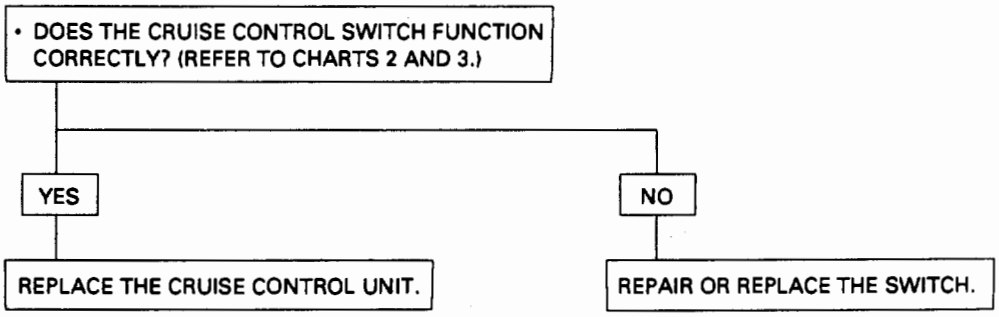

5. CRUISE SPEED IS UNSTABLE (CHART 5)

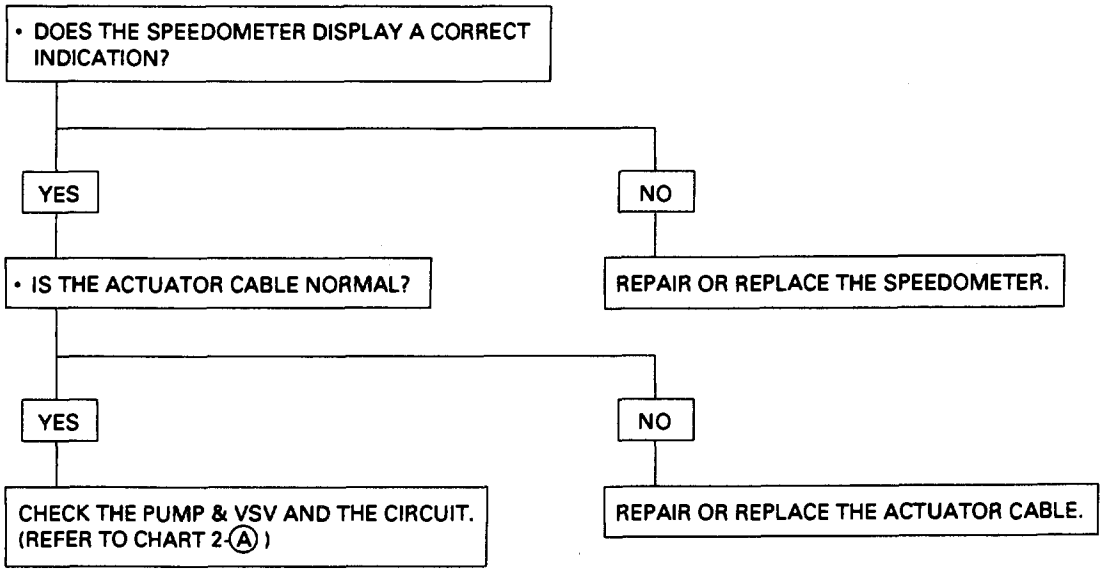

6. CRUISE INDICATOR LIGHT DOES NOT LIGHT (CHART 6)

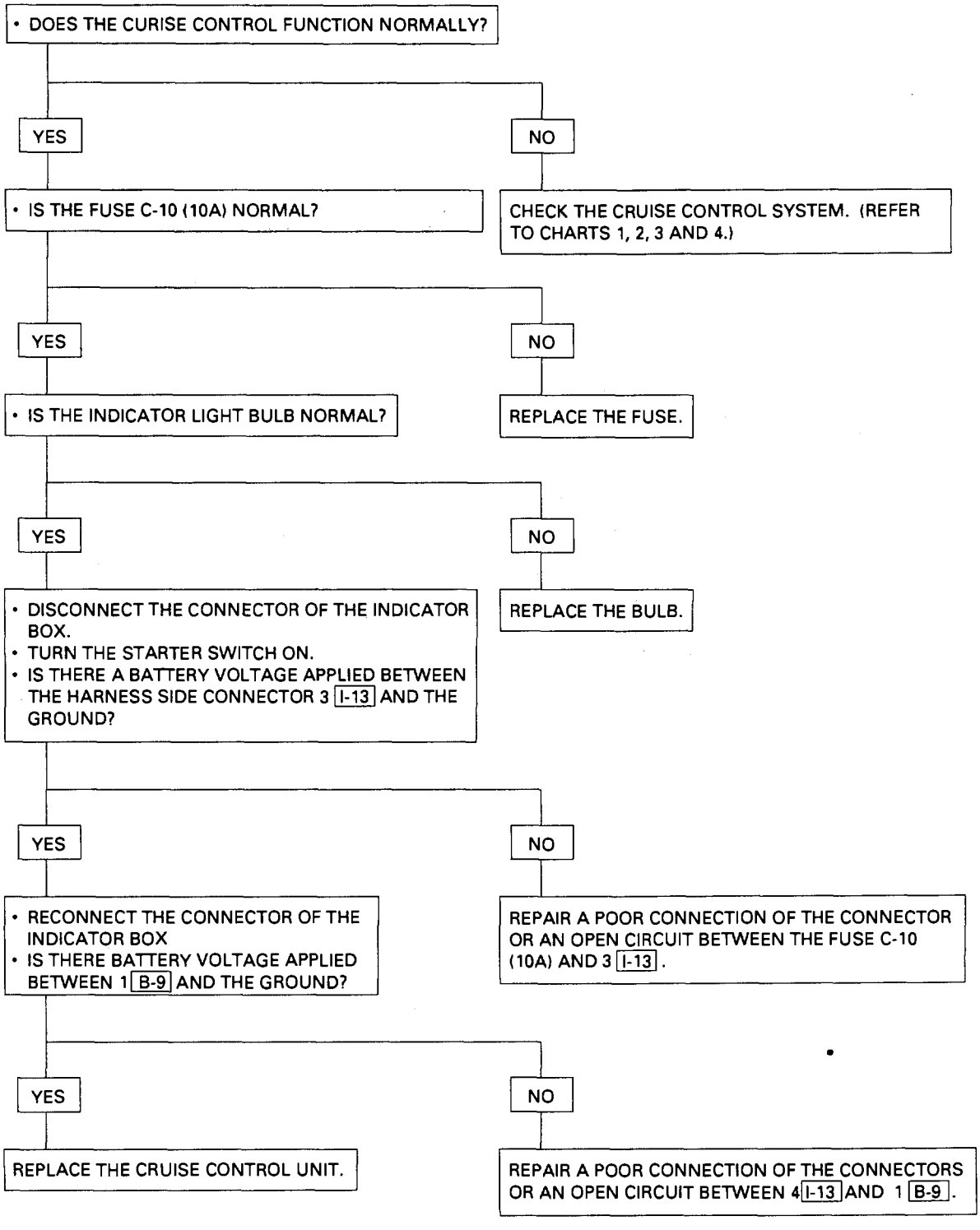

ON-VEHICLE SERVICE

BRAKE SWITCH ADJUSTMENT (FIG. 9B-5)

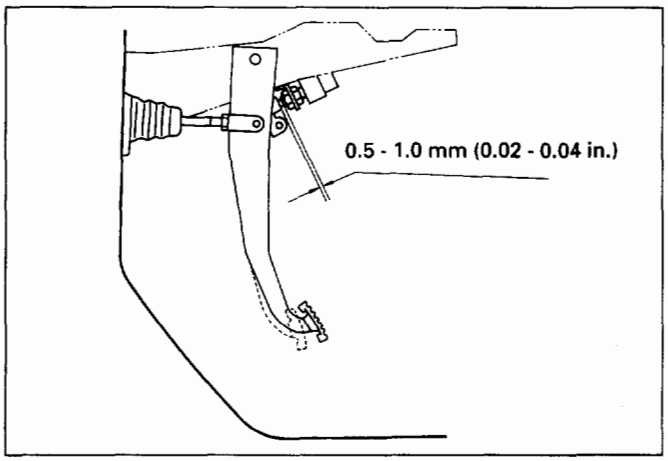

Fig. 9B-5

1. Check to be sure that the brake pedal has been completely returned by the return spring.
2. Disconnect the switch connector.
3. Loosen the lock nut of the switch.
4. Turn the switch clockwise until the tip of screw portion of the brake pedal hits the pedal arm.
5. Turn the switch counterclockwise until the clearance between the tip of the screw portion and the pedal arm becomes 0.5 to 1.0mm (0.02-0.04 in).
6. Tighten the lock nut.
7. Connect the switch connector.

CLUTCH SWITCH ADJUSTMENT (FIG. 9B-6)

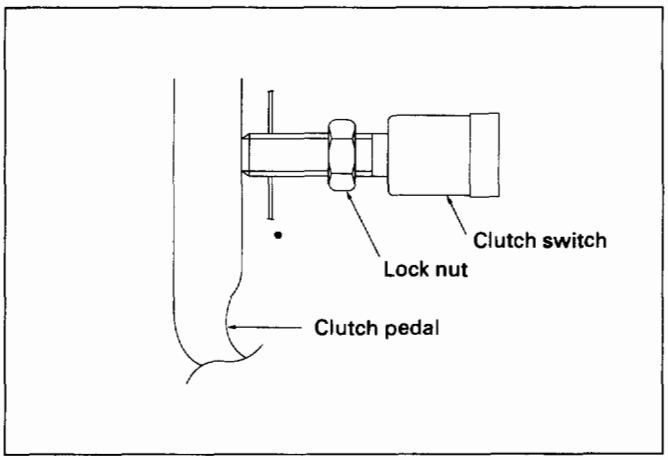

Fig. 9B-6

1. Check to be sure that the clutch pedal has been completely returned by the return spring.
2. Disconnect the switch connector.
3. Loosen the lock nut of the switch.
4. Push the switch by hand until the push rod cannot be seen from the tip portion of the switch.
5. Give the switch one reverse rotation.
6. Tighten the lock nut.
7. Connect the switch connector.

ACTUATOR CABLE ADJUSTMENT (FIG. 9B-7)

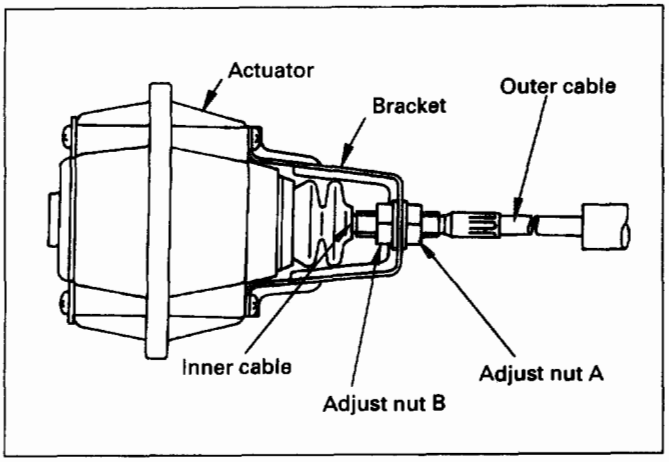

Fig. 9B-7

1. Fix the accelerator pedal at the position where it has been fully returned (with the throttle valve fully closed).
2. Loosen the adjust nuts A and B.
3. With the outer cable pulled to the accelerator pedal side (in the state where the inner cable has no play), tighten the adjust nut A by hand until it hits the bracket.
4. Tighten the adjust nut B to lock it.

STARTER SWITCH (FIG. 9B-8)

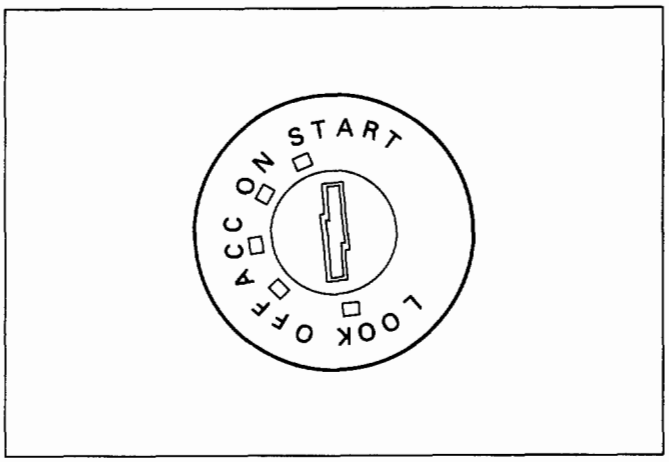

Fig. 9B-8

The starter switch is provided with following switch positions: LOCK, OFF, ACC, ON, and START. Turning the starter key to these positions completes a circuit in order to start and shut off the engine, and operate the accessories.

INSPECTION

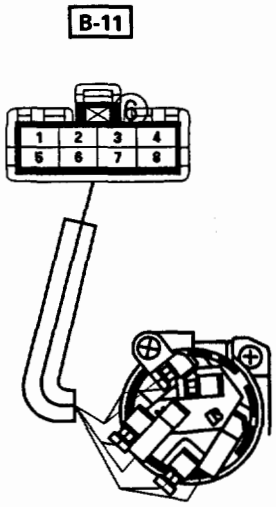

Starter switch key position \ Terminal No.		4 (B2)	1 (ACC)	5 (IG2)	3 (ST)	2 (B1)	7 (IG1)	8 (KEY⊕)	6 (KEY⊖)
LOCK	Removed								
	Inserted								
OFF									
ACC		○—○						○—○	
ON		○—○	○	○		○—○			
START		○		○	○	○—○			

Fig. 9B-9

Check the continuity between the starter switch connector terminals. (Fig. 9B-9)
Replace the starter switch when the result of inspection is found abnormal.

REMOVAL (FIG. 9B-10)

Preparation: Disconnect the battery ground cable.

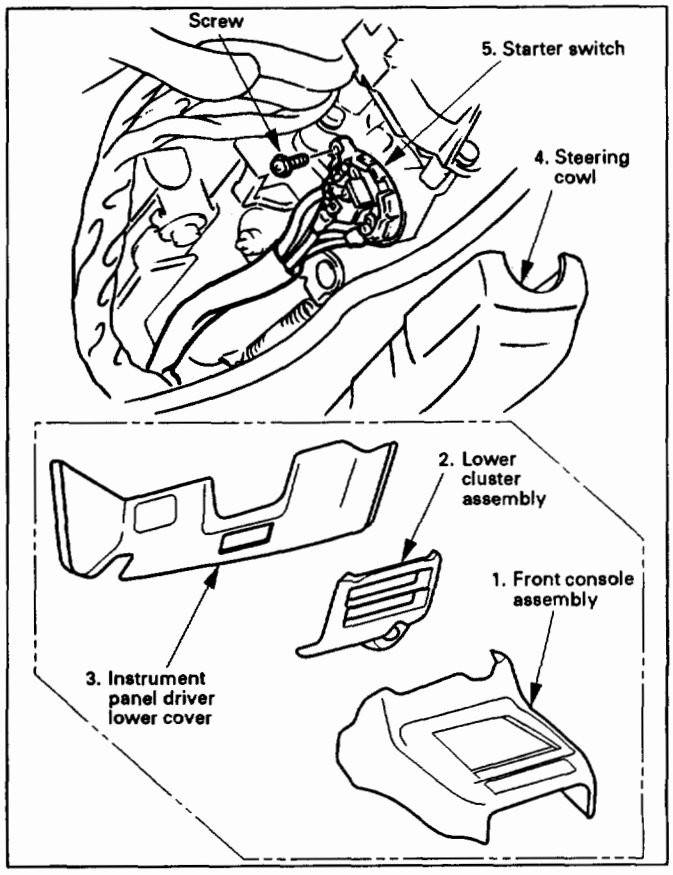

Fig. 9B-10

1. **Front console assembly**
   - Remove four screws.
   - Remove the transmission shift lever knob.
   - Remove the transfer shift lever knob.
   - Disconnect the seat heater switch connectors (If so equipped).
   - Disconnect the "POWER & WINTER" switch connectors (A/T only).

2. **Lower cluster assembly**
   - Remove three screws.
   - Disconnect the cigar lighter connectors.
   - Remove the cigar lighter illumination bulb socket.
   - Disconnect the ashtray illumination bulb connector.

3. **Instrument panel driver lower cover**
   - Remove the engine hood opener.
   - Remove three screws and clip.
   - Disconnect four fasteners.

4. **Steering cowl**
   - Remove seven screws.

5. **Starter switch**
   - Disconnect the connector.
   - Remove the screw.

INSTALLATION

To install, follow the removal steps in the reverse order noting the following point.

1. When installing the steering cowl, be sure to pass the harnesses through the route as shown in the illustration so that the starter switch, the combination switch and the SRS harness will not get caught. (Fig. 9B-11)

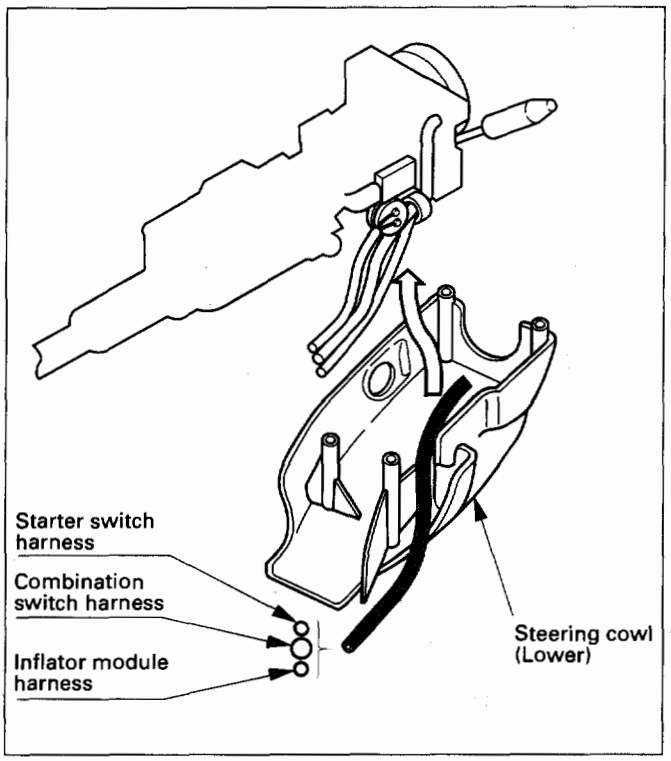

Fig. 9B-11

CRUISE CONTROL MAIN SWITCH

INSPECTION

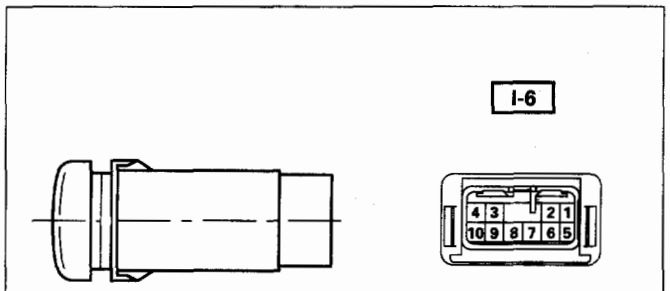

SW position \ Terminal No.		6	7	8	9	2	3
AUTO CRUISE	FREE						
	ON			○—○			
OFF	FREE	○—○					
	ON						

Fig. 9B-12

Check the continuity between the switch connector terminals. (Fig. 9B-12)
Replace the cruise control main switch when the result of inspection is found abnormal.

REMOVAL (FIG. 9B-13)

Preparation: Disconnect the battery ground cable.

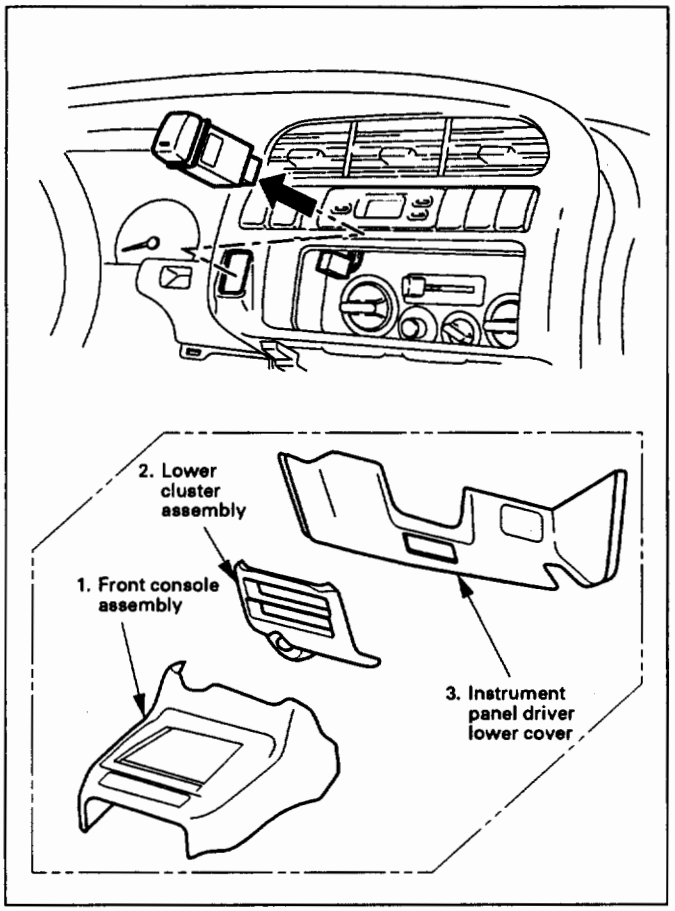

Fig. 9B-13

1. **Front console assembly**
2. **Lower cluster assembly**
3. **Instrument panel driver lower cover**
4. **Instrument panel cluster assembly**
   - Refer to FOG LIGHT SWITCH removal steps in Section 8 CHASSIS ELECTRICAL.
5. **Cruise control main switch**
   - To remove the switch, pushing the lock from the back side of the cluster assembly.

INSTALLATION

To install, follow the removal steps in the reverse order, noting the following point.

1. Push in the switch with your fingers until the switch is locked securely.

CRUISE CONTROL SWITCH (COMBINATION SWITCH)

INSPECTION

Check the continuity between the switch connector terminals. (Fig. 9B-14)
Replace the cruise control switch when the result of inspection is found abnormal.

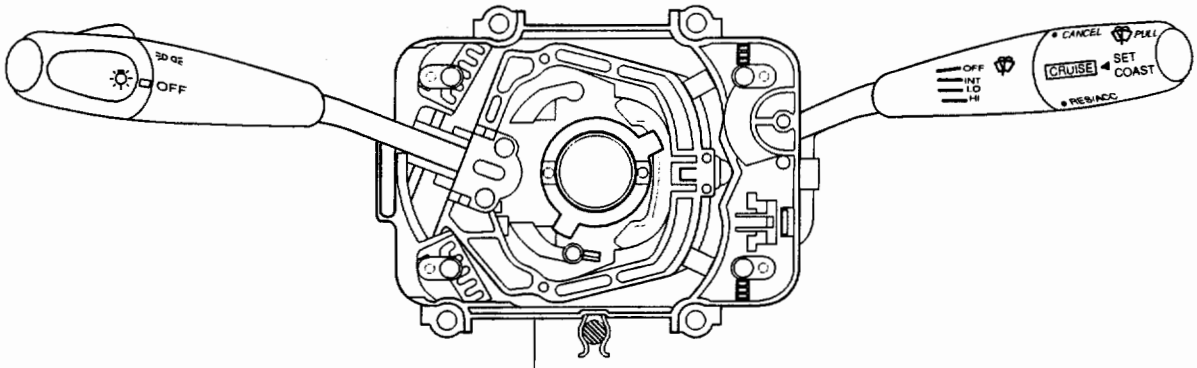

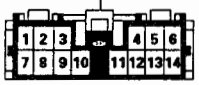

B-52

SW position \ Terminal No.		9	10	11	12	13
SET COAST	ON	○—○			○—○	
	OFF				○—○	
CANCEL						
RESUME ACCEL	ON				○—○	
	↕				○—○	
	RESUME (ACCEL)	○—		—○	○—○	

Fig. 9B-14

REMOVAL AND INSTALLATION

Refer to removal and installation steps on the LIGHTING SWITCH (COMBINATION SWITCH) in Section 8 CHASSIS ELECTRICAL.

CRUISE CONTROL UNIT

CIRCUIT INSPECTION OF THE CONTROL UNIT (FIG. 8-15)

Disconnect the control unit connector, and check the voltage and the continuity between the harness side connector terminals with the starter switch and the cruise control main switch on. Replace the cruise control unit when the result of inspection is found abnormal.

B-9

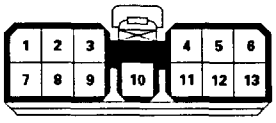

Harness side connector

Terminal No.	Wire color	Connected to	Item checked	Connecting terminal	Check condition	Standard
1	B/O	Cruise indicator	Voltage	1-ground	–	Approx. 12V
3	BR/B	Vent valve (Pump& Acuator)	Resistance	Refer to the resistance measurement of the vent valve in "Pump & Actuator" of this section		
4	GR/G	Clutch switch (M/T) Mode switch (A/T)	Voltage	4-ground	Depress the clutch pedal (M/T) or shift to any position other than the P, R, N range (A/T)	Approx. 12V
					Depress the clutch pedal (M/T), P, R, N range (A/T)	0V
5	BR/R	Power	Voltage	5-ground	Cruise control main switch on	Approx. 12V
6	LG	Set switch (combination switch)	Voltage	6-ground	Set & main switch on	Approx. 12V
7	BR	Pump (Pump & VSV)	Resistance	Refer to the resistance measurement of the safety valve on "Pump & VSV" of this section		
8	O	Brake switch	Voltage	8-ground	Step on brake pedal	0V
					Release brake pedal	Approx. 12V
9	B	Ground	Resistance (continuity)	9-ground	–	Continuity
10	BR/W	Vacuum pump (Pump & VSV)	Current	Refer to the curret measurement of the vacuum pump in "Pump & VSV" of this section		
11	BR/Y	Resume switch (Combination switch)	Voltage	11-ground	Resume & main switch on	Approx. 12V
12	G/Y	Brake switch	Voltage	12-ground	Step on brake pedal	Approx. 12V
					Release brake pedal	0V
13	W/B	Vehicle speed sensor (incorporated into meter)	Voltage	13-ground		

Fig. 9B-15

REMOVAL (FIG. 9B-16)

Preparation: Disconnect the battery ground cable.

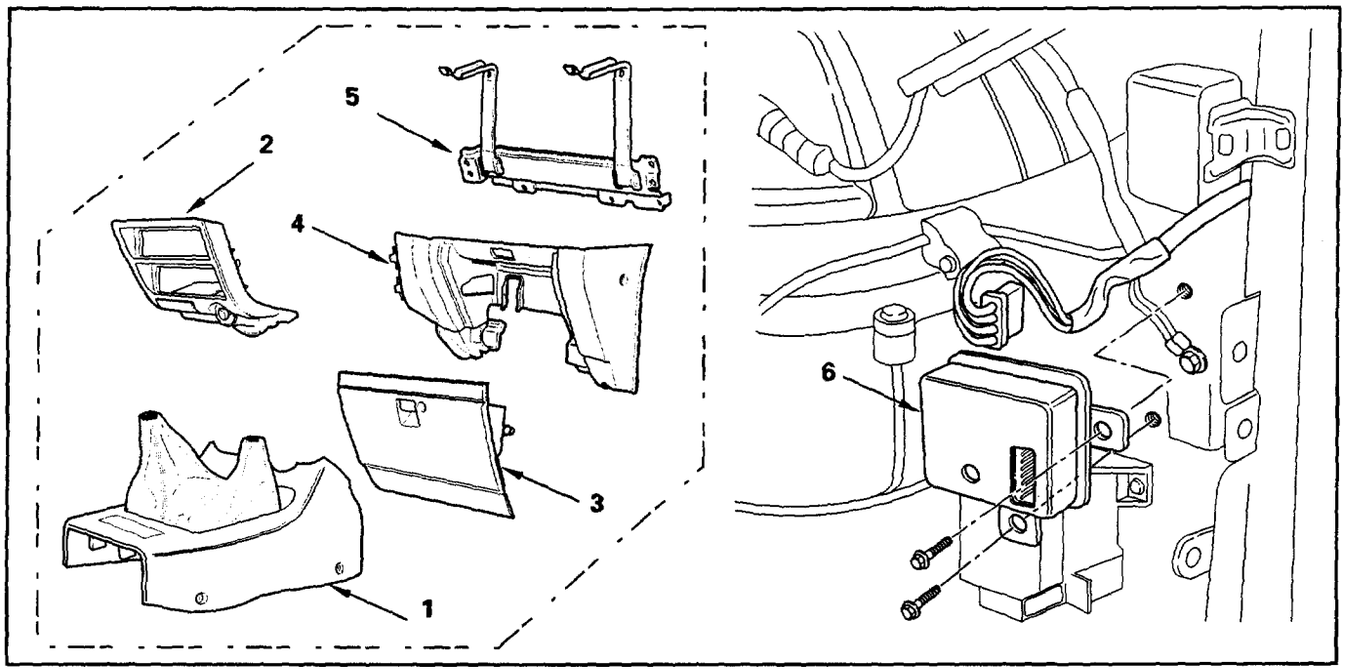

Fig. 9B-16

1. **Front console assembly**
2. **Lower cluster assembly**
3. **Glove box assembly**
4. **Instrument panel passenger lower cover**
5. **Passenger knee bolster**
   - Refer to INSTRUMENT PANEL in Section 10 BODY.
6. **Cruise control unit**
   - Remove the rear wiper intermittent relay.
   - Disconnect the connector.
   - Remove two screws.

INSTALLATION

To install, follow the removal steps in the reverse order.

PUMP & ACTUATOR (FIG. 9B-17)

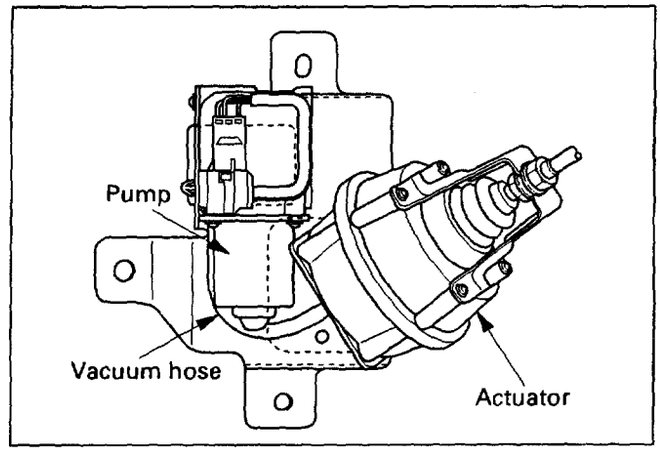

Fig. 9B-17

ACTUATOR CABLE DIAGRAM (FIG. 9B-18)

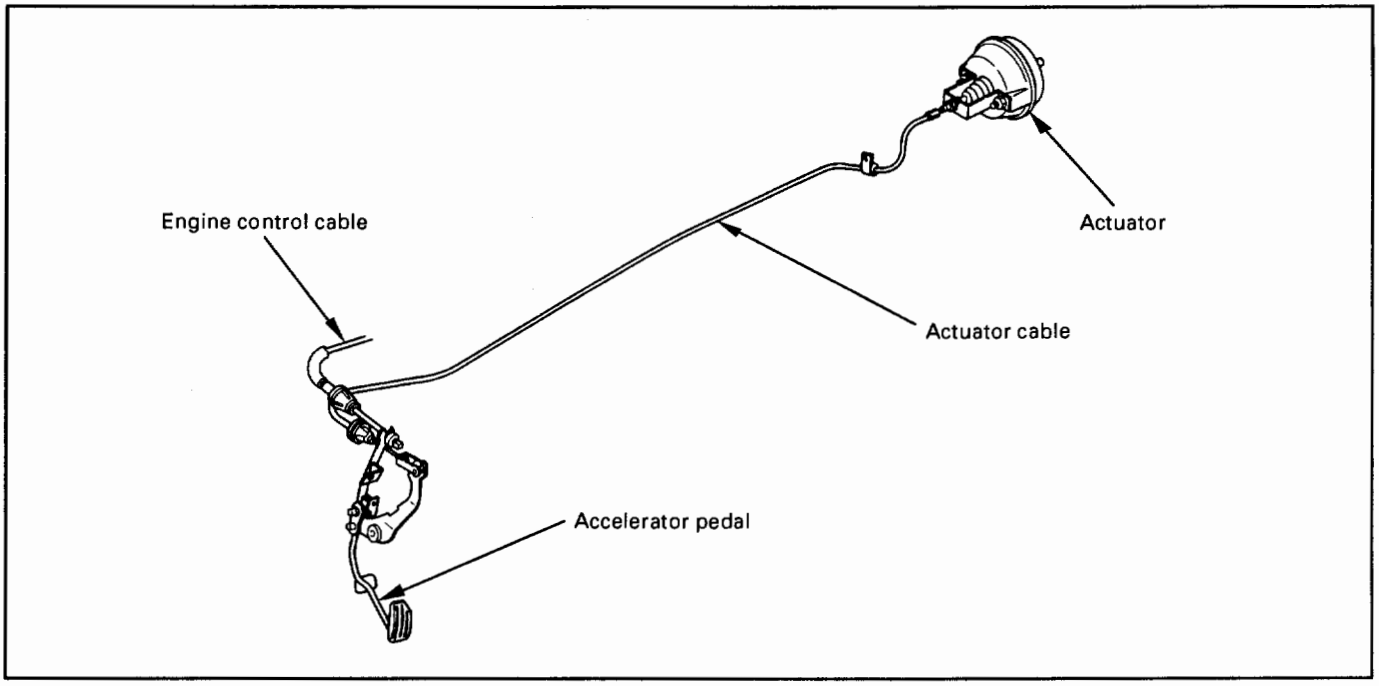

Fig. 9B-18

INSPECTION

Circuit	Tester connection	Resistance (Ω)	Current (A)
Vent valve	1-2	62-72	–
Safety valve	2-4	62-72	–
Vacuum pump	2-3	–	Max. 2A

Fig. 9B-19

1 Check the resistance and current values between the pump & VSV connector terminals. (Fig. 9B-19)
Repair or replace the pump & VSV when the result of inspection is found abnormal.

Inspection of operation (Fig. 9B-20)

Apply the battery voltage between the pump & VSV connector terminals, and check to see if the motor and actuator operate smoothly.
Repair or replace the pump & VSV when the result of inspection is found abnormal.

Check condition	Operation
Connect connector terminal 2 C-37 to battery (+) terminal and 3 C-37 to (-) terminal	Motor operates
In the condition above, ground connector terminal 1 C-37 and 4 C-37	Actuator cable is pulled
In the condition above, disconnect connector terminal 1 C-37 and 4 C-37	Cable is pulled back

Fig. 9B-20

REMOVAL (FIG. 9B-21)

Preparation: Disconnect the battery ground cable.

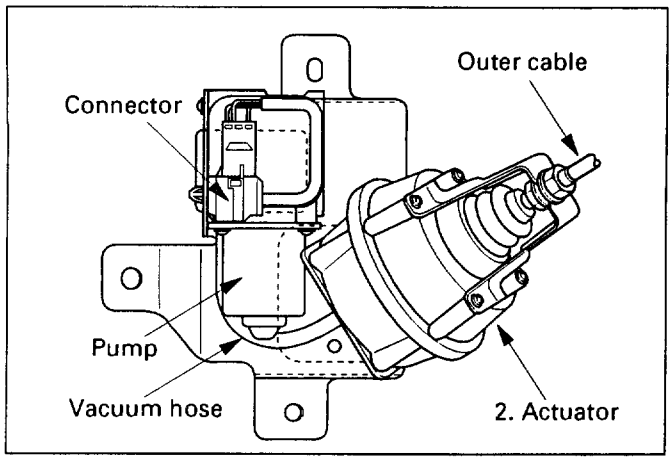

Fig. 9B-21

1. **Pump**
   - Disconnect the connector.
   - Disconnect the vacuum hose.
   - Remove the pump fixing screws.
2. **Actuator**
   - Disconnect the inner cables of the actuator at the accelerator pedal.
   - Remove the outer cable clips.
   - Remove the actuator fixing screws.

INSTALLATION

To install, follow the removal steps in the reverse order, noting the following point.

1. Take care not to bend the cable excessively.

BRAKE SWITCH

INSPECTION

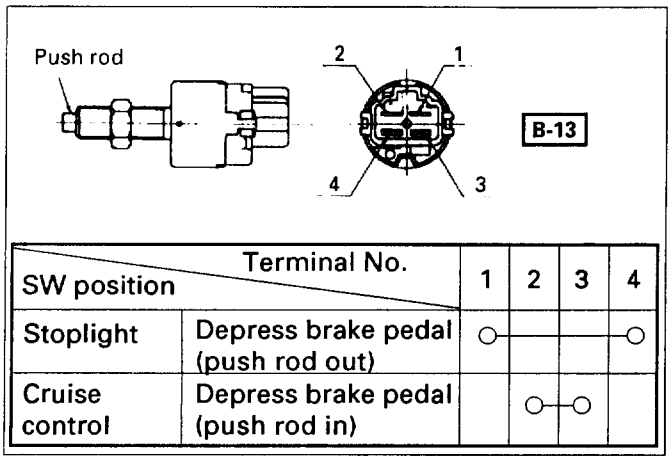

SW position \ Terminal No.		1	2	3	4
Stoplight	Depress brake pedal (push rod out)	○			○
Cruise control	Depress brake pedal (push rod in)		○	○	

Fig. 9B-22

1. Check the installation condition of the brake switch.
   - Refer to the brake switch of "STOPLIGHT AND REAR DEFOGGER" section in this manual.
2. Check the continuity between the switch connector terminals. (Fig. 9B-22)
3. Check to see if the push rod operates smoothly.
   Adjust, repair or replace the brake switch when the result of inspection is found abnormal.

REMOVAL AND INSTALLATION

Refer to the brake switch of "STOPLIGHT AND REAR DEFOGGER" section in this manual.

CLUTCH SWITCH

INSPECTION

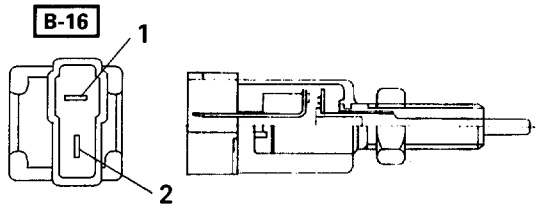

SW position \ Terminal No.	1	2
Release clutch pedal (Push rod in)	○	○
Depress clutch pedal (Push rod out)		

Fig. 9B-23

1. Check the installation condition of the clutch switch.
   - Refer to the clutch switch of "METER AND WARNING/INDICATOR LIGHT" section in this manual.
2. Check the continuity between the switch connector terminals. (Fig. 9B-23)
3. Check to see if the push rod operates smoothly.
   Adjust, repair or replace the clutch switch when the result of inspection is found abnormal.

REMOVAL AND INSTALLATION

Refer to the clutch switch of "METER AND WARNING/INDICATOR" section in this manual.

MODE SWITCH

INSPECTION

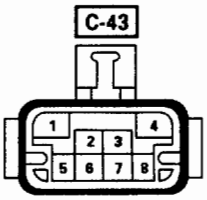

Shift lever position \ Terminal No.	5	8	7	6	3
P	○	○			○
R	○	○	○		
N	○		○		○
D	○		○	○	
3	○	○	○	○	○
2	○	○		○	
L	○			○	○

Fig. 9B-24

1. Check the continuity between the mode switch terminals. (Fig. 9B-24)
   Adjust or replace the mode switch when the result if inspection is found abnormal.

REMOVAL AND INSTALLATION

Refer to Section 7A "AUTOMATIC TRANSMISSION" for mode switch removal and installation steps.

VEHICLE SPEED SENSOR (INCORPORATED IN SPEEDOMETER)

INSPECTION

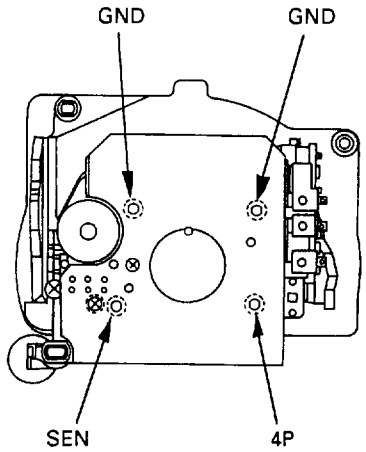

Terminal symbol \ Tester terminal	Red (+)	Black (-)	Black (-)	Red (+)
4P-GND	4P	GND	4P	GND
	13.5K-16.5K		∞	

Note: Use an analog type circuit tester.

Fig. 9B-25

Remove the speedometer from the meter assembly, and measure the resistance value between the terminals. (Fig. 9B-26)
Replace the speedometer assembly when the result of inspection is found abnormal.

REMOVAL AND INSTALLATION

Refer to Section 8 "METER AND WARNING/ INDICATOR LIGHT" for vehicle speed sensor removal and installation steps.

DIODE

INSPECTION

Terminal No.		1	2
Connection pattern	A	+	-
	B	-	+

Fig. 9B-26

There should be continuity in either A or B when a circuit tester is connected with diode terminal. (Fig. 9B-26)
Replace the diode when the result of inspection is found abnormal.

REMOVAL (FIG. 9B-27)

Preparation: Disconnect the battery ground cable.

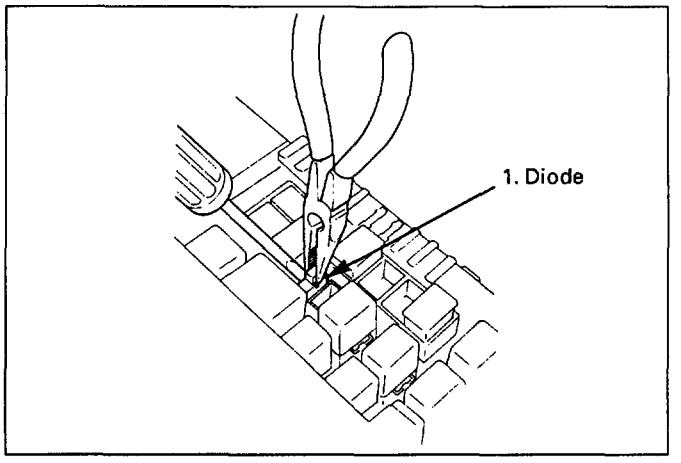

Fig. 9B-27

1. **Diode**
   - Remove the diode by inserting a thin screwdriver between the lock rib side of the diode and the connector housing.

CRUISE CONTROL MAIN RELAY

INSPECTION

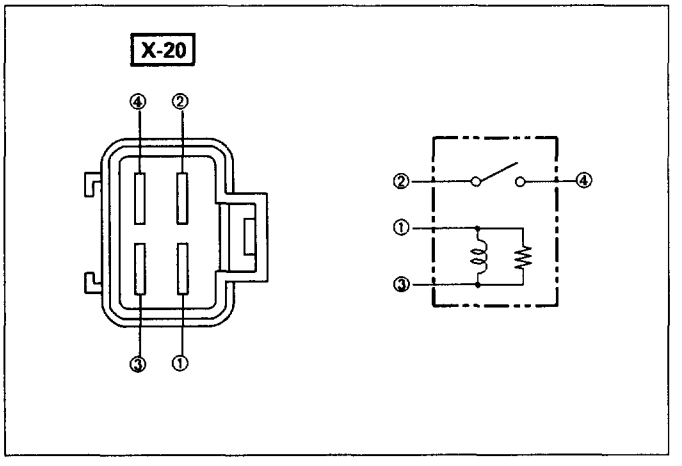

Fig. 9B-28

Check to see if there is any continuity between the relay terminals. (Fig. 9B-28)
Replace the relay when the result of inspection is found abnormal.

② – ④ . . . . . No continuity
(When the battery voltage is applied between ① – ③)
② – ④ . . . . . Continuity

NOTE:
For the relay removal, refer to "Connector Handling" in the "NOTES FOR WORKING ON ELECTRICAL-ITEMS" in this section.

MEMO

SECTION 9J

SUPPLEMENTAL RESTRAINT SYSTEM (SRS)

WARNING: THIS VEHICLE IS EQUIPPED WITH A SUPPLEMENTAL INFLATABLE RESTRAINT SYSTEM (SRS). REFER TO WARNING IN THIS SECTION UNDER "ON-VEHICLE SERVICE" AND THE SRS COMPONENT AND WIRING LOCATION VIEW IN THIS SECTION BEFORE PERFORMING SERVICE ON OR AROUND SRS COMPONENTS OR WIRING. FAILURE TO FOLLOW WARNING COULD RESULT IN POSSIBLE AIR BAG DEPLOYMENT, PERSONAL INJURY, OR OTHERWISE UNNEEDED SRS REPAIRS.

TABLE OF CONTENTS

SUPPLEMENTAL RESTRAINT SYSTEM (SRS)

SECTION 1 – INTRODUCTION

CAUTION: WHEN FASTENERS ARE REMOVED, ALWAYS REINSTALL THEM AT THE SAME LOCATION FROM WHICH THEY WERE REMOVED. IF A FASTENER NEEDS TO BE REPLACED, USE THE CORRECT PART NUMBER FASTENER FOR THAT APPLICATION. IF THE CORRECT PART NUMBER FASTENER IS NOT AVAILABLE, A FASTENER OF EQUAL SIZE AND STRENGTH (OR STRONGER) MAY BE USED. FASTENERS THAT ARE NOT REUSED, AND THOSE REQUIRING THREAD LOCKING COMPOUND WILL BE CALLED OUT. THE CORRECT TORQUE VALUE MUST BE USED WHEN INSTALLING FASTENERS THAT REQUIRE IT. IF THE ABOVE CONDITIONS ARE NOT FOLLOWED, PARTS OR SYSTEM DAMAGE COULD RESULT.

GENERAL DESCRIPTION 3
- Restraint Devices 3
- System Description 4

SRS Component and wiring Location View 5

COMPONENT DESCRIPTION 6
- DERM 6
- "AIR BAG"Warning Lamp 6
- Dual Pole Arming Sensor 6
- Discriminating Sensors 6
- SRS Coil Assembly 7
- Inflator Modules 7
- Steering Column 7
- Knee Bolster 7

DEFINITIONS 8

DIAGNOSIS 10
- Diagnostic Trouble Codes 10
- Scan Tool Diagnostic 10
- Use of Special Tools 10

SRS CONNECTOR BODY FACE VIEWS 11

REPAIRS AND INSPECTION REQUIRED AFTER AN ACCIDENT 12
- Accident With Deployment–Component Replacement and Inspections 12
- Accident With or Without Deployment–Component Inspections 12
- Sensor Replacement Guideline 12
- Wiring Damage 12
- SRS Conector (Plastic Body and Terminal Metal Pin) Damage 12

SRS Wire Pigtail Damage 12
SRS Wire Damage 12
ON-VEHICLE SERVICE 13
Service Precautions 13
Disabling the SRS 13
Enabling the SRS 13
Handling/Installation/Diagnosis 13
INFLATOR MODULE HANDLING/SHIPPING/SCRAPPING 14
Live (Undeployed) Inflator Module 14
Inflator Module Shipping Procedures for Live (Undeployed) Inflator Modules 14
Deployed Inflator Module 14
Inflator Module Scrapping Procedure 15
Deployment Outside Vehicle (Driver Inflator Module) 16
Deployment Outside Vehicle(Passenger Inflator Module) 19
Deployment Inside Vehicle(Vehicle Scrapping Procedure) 22
Deployed Inflator Module Handling 24
SPECIAL TOOLS 25
SRS Driver/Passenger Load Tool 25
J–39200 DVM 26
Scan Tool 26
J–35616–A Connector Test Adapter Kit 26
J–41434 SRS Deployment Tool 26
J–41497 SRS Deployment Fixture 26

GENERAL DESCRIPTION

RESTRAINT DEVICES

The Supplemental Restraint System(SRS) helps supplement the protection offered by the driver and front passenger seat belts by deploying an air bag from the center of the steering wheel and from the top of the right side of the instrument panel.

- ① Deployed Air Bag
- ② Knee Bolster
- ③ Seat Belt

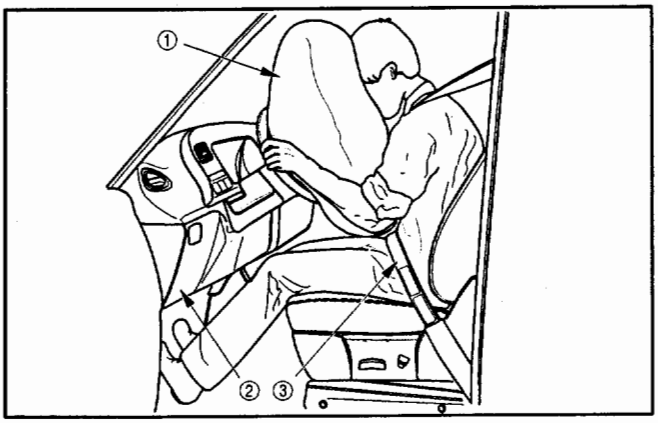

The air bag deploys when the vehicle is involved in a frontal crash of sufficient force up to 30 degrees off the centerline of the vehicle. To further absorb the crash energy there is a knee bolster located beneath the instrument panel for both the driver and passenger, and the steering column is collapsible.

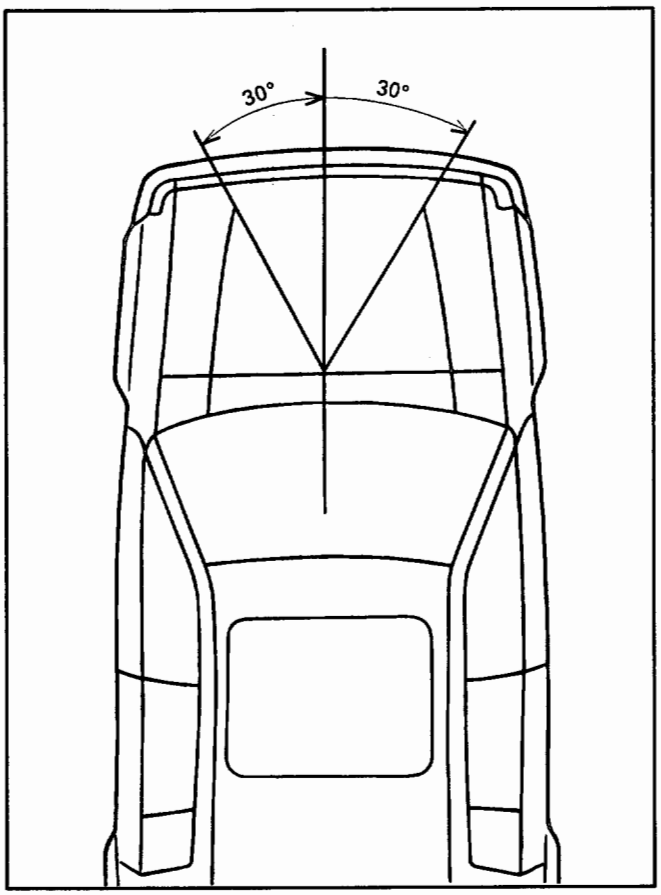

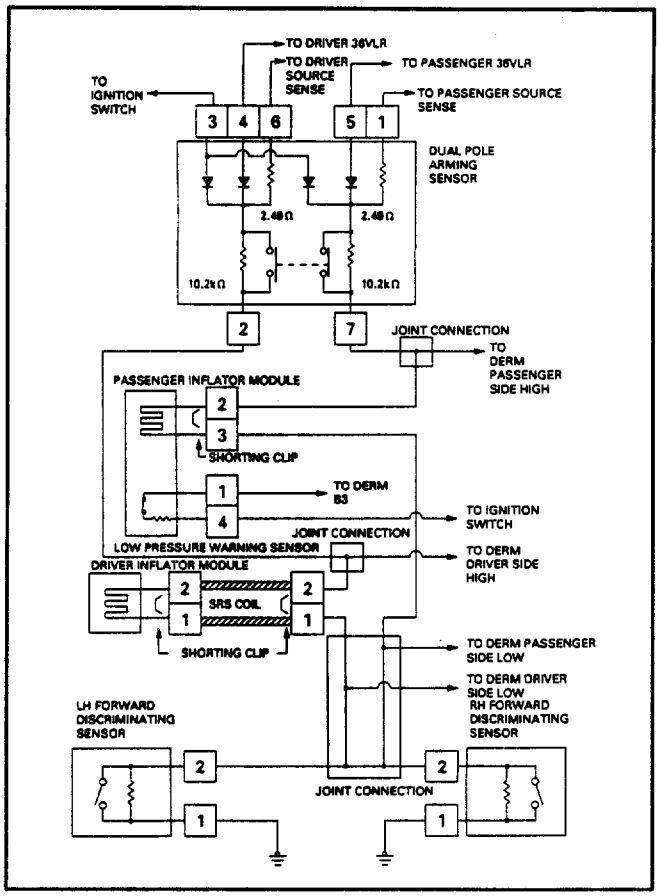

SYSTEM DESCRIPTION

The main portions of the SRS are the deployment loops and the Diagnostic Energy Reserve Module(DERM). The main function of the deployment loops is to supply current through the inflator modules,which will cause deployment of the air bags in the event of a frontal crash of sufficient force, up to 30 degrees off the centerline of the vehicle.The dual pole arming sensor, SRS coil assembly(driver side only), inflator modules, LH forward discriminating sensor and RH forward discriminating sensor make up the deployment loops. The dual pole arming sensor switches power to the inflator modules on the high side(power side) of the deployment loops. Either of the discriminating sensors can supply ground to the inflator modules on the low side (ground side) of the loops. The inflator modules are only supplied sufficient current to deploy when the dual pole arming sensor and at least one of the discriminating sensors are closed simultaneously.

A function of the DERM is to supply the deployment loops with a 36–Volt Loop Reserve(36VLR) to ensure sufficient energy to deploy the air bags if the ignition feed to the dual pole arming sensor is lost during a frontal crash.

Another function of the DERM is electrical system diagnostics. The DERM monitors the deployment loops in conjunction with the resistors in the dual pole arming sensor, LH forward discriminating sensor and RH forward discriminating sensor. These resistors make it possible for the DERM to detect circuit and component malfunctions within the deployment loops. The DERM monitors the voltage drop across each component within the loops during normal non–deployment operation. If the monitored voltages fall outside of expected limits, the DERM will indicate a malfunction through the storage of a diagnostic trouble code and the illumination of the "AIR BAG" warning lamp.

SRS COMPONENT AND WIRING LOCATION VIEW

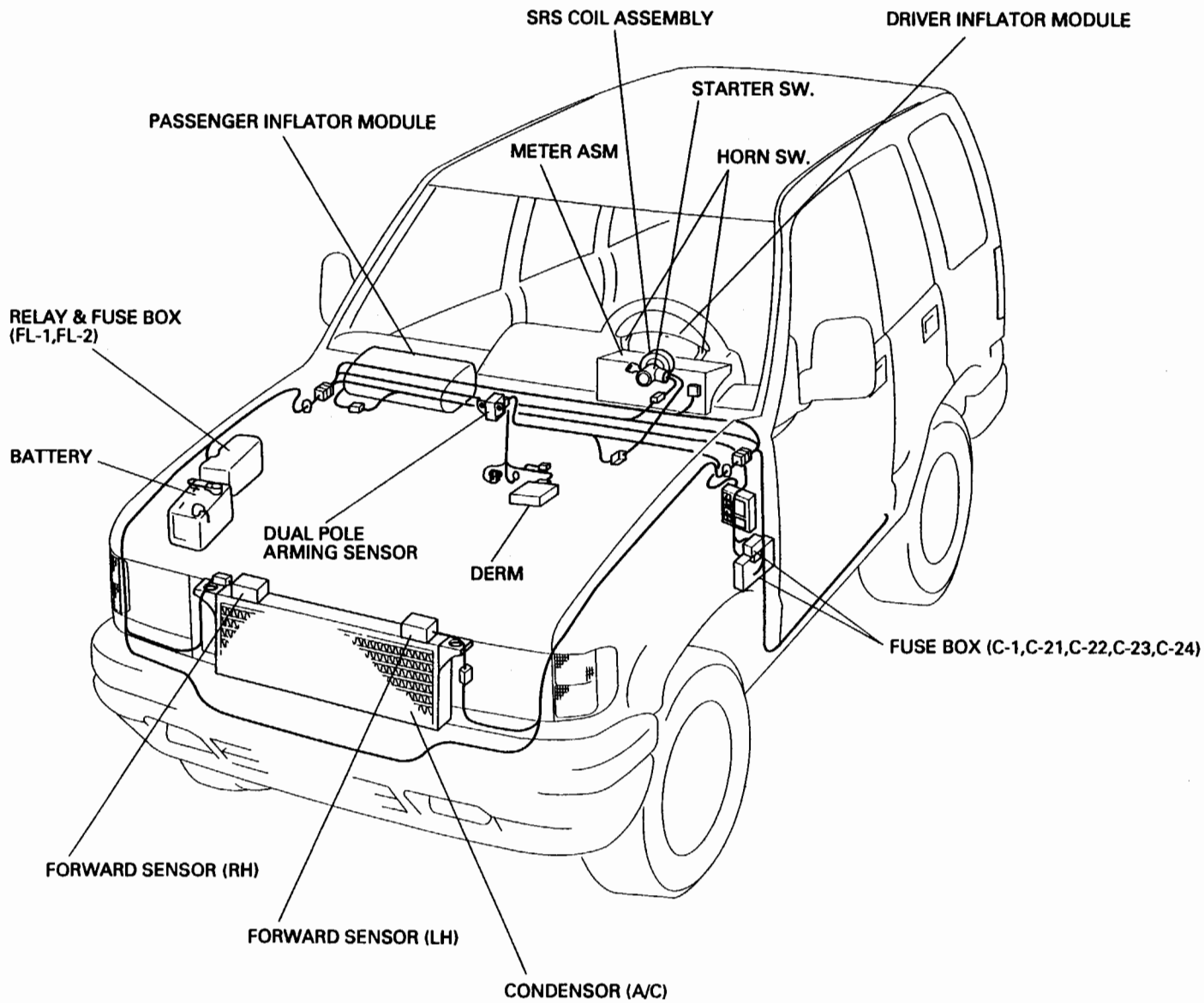

COMPONENT DESCRIPTION

DERM

CAUTION: DO NOT OPEN THE DERM CASE FOR ANY REASON. TOUCHING THE CONNECTOR PINS OR SOLDERED COMPONENTS MAY CAUSE ELECTROSTATIC DISCHARGE DAMAGE. REPAIR OF A MALFUNCTIONING DERM IS BY REPLACEMENT ONLY.

The DERM is designed to perform the following functions in the SRS:

1. Energy Reserve–The DERM maintains two 36–Volt Loop Reserve(36VLR) energy supplies to provide deployment energy when the vehicle voltage is low or lost in a frontal crash.
2. Malfunction Detection–The DERM performs diagnostic monitoring of SRS electrical components.
3. Malfunction Recording–The DERM provides SRS diagnostic trouble code information through a scan tool.
4. Driver Notification–The DERM warns the vehicle driver of SRS malfunctions by controlling the "AIR BAG" warning lamp.
5. Frontal Crash Recording–The DERM records the SRS status during a frontal crash.

The DERM is connected to the SRS wiring harness by a 24–way connector. This harness connector uses a shorting clip across certain terminals in the contact area. This shorting clip connects the "AIR BAG" warning lamp to ground when the DERM harness connector is disconnected. This will cause the "AIR BAG" warning lamp to come "ON" steady whenever the ignition switch is at the RUN,BULB TEST or START positions with the DERM disconnected.

"AIR BAG"WARNING LAMP

Ignition voltage is applied to the "AIR BAG" warning lamp when the ignition switch is at the RUN,BULB TEST or START positions. The DERM controls the lamp by providing ground with a lamp driver. The "AIR BAG" warning lamp is used in the SRS to do the following:

1. Verify lamp and DERM operation by flashing SEVEN times when the ignition switch is first turned"ON".
2. Warn the vehicle driver of SRS electrical system malfunctions which could potentially affect the operation of the SRS. These malfunctions could result in non–deployment in case of a frontal crash or deployment for conditions less severe than intended.

The "AIR BAG" warning lamp is the key to driver notification of SRS malfunctions. For proper lamp operation, refer to the "SRS Diagnostic System Check" in this section.

DUAL POLE ARMING SENSOR

The dual pole arming sensor is a protective switch located in the high side(power side) of the deployment loops. The dual pole arming sensor is calibrated to close at low level velocity changes(lower than the discriminating sensors).
This ensures that the inflator modules are connected directly to the "36 VLR" outputs of the DERM or "Ignition 1" voltage when any discriminating sensor closes.
The dual pole arming sensor consists of: a sensing element, two sets of normally open switch contacts, diagnostic resistors and diodes. The sensing element closes both sets of switch contacts when the velocity of the vehicle changes at a rate indicating a potential need for deployment.
Two of the diagnostic resistors are connected in parallel with the switch contacts. This allows a small amount of current to flow through each of the deployment loops during normal, non–deployment operation. This current flow results in voltage drops across each component in the deployment loops. The DERM monitor these voltage drops to detect circuit or component malfunctions. There are two additional diagnostic resistors within the dual pole arming sensor which allow the DERM to monitor the voltage supplied to the high side of the deployment loops. These monitored voltages are used by the diagnostic logic of the DERM to make a more precise determination of the actual deployment loop malfunction.
The diodes within the dual pole arming sensor provide isolation between the "36VLR" outputs of the DERM and the vehicle electrical system "Ignition 1" voltage. The presence of the diodes prevents a direct continuity measurement through the dual pole arming sensor resistors to terminals"3","4" or "5".

DISCRIMINATING SENSORS

The discriminating sensors are protective switches wired in parallel on the low side(ground side) of the deployment loops. These sensors are calibrated to close with velocity changes which are severe enough to warrant deployment.
The discriminating sensors consist of a sensing element and normally open switch contacts when the vehicle velocity changes are severe enough to warrant deployment.
A diagnostic resistor is connected in parallel with the switch contacts within the LH forward discriminating sensor and RH forward discriminating sensor. These parallel resistors supply the ground path for the current passing through the deployment loops during normal, non–deployment operation. This current flow results in voltage drops across each component within the deployment loops. The DERM monitors these voltage drops to detect circuit or component malfunctions.

SRS COIL ASSEMBLY

The SRS coil assembly consists of two current carrying coils. They are attached to the steering column and allow rotation of the steering wheel while maintaining continuous contact of the driver deployment loop to the driver inflator module.
There is a shorting clip on the yellow 3–way connector near the base of the steering column which connects the SRS coil to the SRS wiring harness. The shorting clip shorts the circuits to the SRS coil and driver inflator module when the yellow 3–way connector is disconnected. The circuit to the driver inflator module is shorted in this way to help prevent unwanted deployment of the air bag when servicing the steering column or other SRS components.

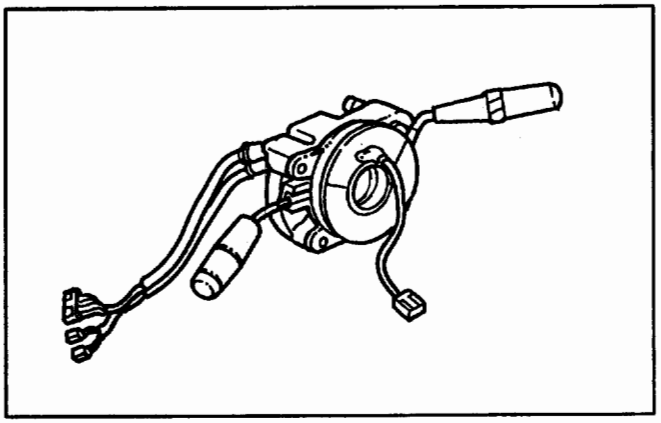

INFLATOR MODULES

The inflator modules consist of an inflatable bag and an inflator(a canister of gas–generating material and an initiating device). When the vehicle is in a frontal crash of sufficient force to close the dual pole arming sensor and at least one of the discriminating sensors simultaneously, current flows through the deployment loops. Current passing through the initiator ignites the material in the inflator module. The gas produced from this reaction rapidly inflates the air bag.

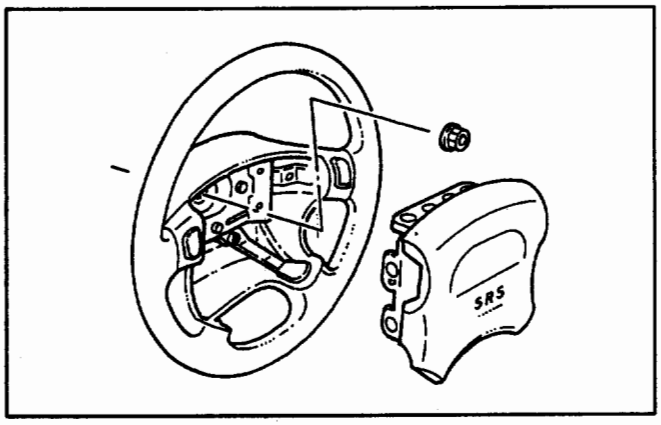

There is a shorting clip on the driver inflator module side of the upper steering column connector which connects the SRS coil assembly to the driver inflator module. The shorting clip shorts across the driver inflator module circuits when the upper steering column connector is disconnected. The circuit to the driver inflator module is shorted in this way to help prevent unwanted deployment of the air bag when servicing the driver inflator module, the steering column or other SRS components.

There is a shorting clip on the passenger inflator module connector which connects to the passenger inflator module jumper. The shorting clip shorts across the passenger inflator module circuit when the passenger inflator module connector is disconnected. The circuit to the passenger inflator module is shorted in this way to help prevent unwanted deployment of the air bag when servicing the passenger inflator module, the instrument panel or other SRS components.

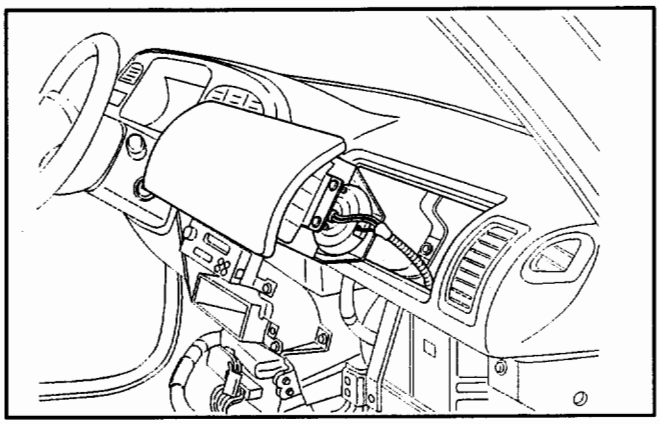

STEERING COLUMN

The steering column absorbs energy and is designed to compress in a frontal crash to decrease the chance of injury to the driver. A steering column reinforcement is also used for additional support.

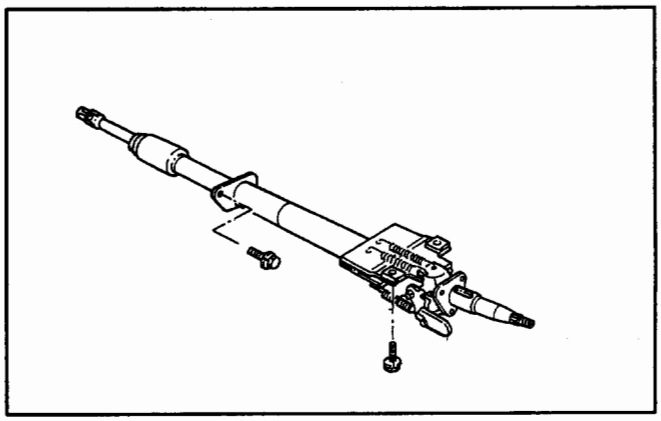

KNEE BOLSTER

The knee bolsters are used to absorb energy and control the forward movement of the vehicle's front seat occupants during a frontal crash, by limiting leg movement.

DEFINITIONS

AIR BAG – An inflatable cloth cushion designed to deploy in certain frontal crashes. It supplements the protection offered by the seat belts by distributing the impact load more evenly over the vehicle occupant's head and torso.

ASYNCHRONOUS – Performed in a non–periodic fashion,i.e.no defined time or interval.

B+ – Battery voltage, the voltage available at the battery at the time of the indicated measurement. With the key "ON" and the engine not running, the system voltage will likely be between 12 and 12.5 volts. At idle the voltage may be 14 to 16 volts. The voltage could be as low as 10 volts during engine cranking.

BULB CHECK– The DERM will cause the "AIR BAG" warning lamp to flash seven times and then go "OFF" whenever the ignition switch transitions to the RUN position from any other ignition switch position and no malfunctions are detected.

"CONTINUOUS MONITORING" – Tests performed by the DERM on the SRS every 100 milliseconds while "Ignition 1" voltage is in the normal operating voltage range at the DERM.

DATA LINK CONNECTOR(DLC) – Formerly "ALDL", a connector which allows communication with an off–board computer, such as a scan tool.

DATUM LINE– A base line parallel to the plane of the underbody or frame from which all vertical measurements originate.

DEPLOY – To inflate the air bag.

DEPLOYMENT LOOPS – The circuits which supply current to the inflator modules to deploy the air bag.

DERM – Diagnostic energy reserve module which provides reserve energy to the deployment loops and performs diagnostic monitoring of all SRS components.

DIAGNOSTIC TROUBLE CODE(DTC) – Formerly "Code,"a numerical designator used by the DERM to indicate specific SRS malfunctions.

DRIVER CURRENT SOURCE – An output of the DERM which injects current into the driver inflator module circuit during the "Initiator Assembly Resistance Test."

DRIVER INFLATOR MODULE – An assembly located in the steering wheel hub consisting of an inflatable air bag, an inflator and an initiator.

DUAL POLE ARMING SENSOR – A sensor on the high side(power side) of the deployment loops that is calibrated to supply voltage to the inflator modules when the vehicle velocity changes are severe enough to warrant arming of the air bags in preparation for deployment.

EEPROM – Electrically Erasable Programmable Read Only Memory. Memory which retains its contents when power is removed from the DERM.

FORWARD LH DISCRIMINATING SENSOR – A sensor on the low side(ground side) of the deployment loops which is calibrated to ground the inflator modules when the vehicle velocity changes are severe enough to warrant deployment of the air bags.

FORWARD RH DISCRIMINATING SENSOR – A sensor on the low side(ground side) of the deployment loops which is calibrated to ground the inflator modules when the vehicle velocity changes are severe enough to warrant deployment of the air bag.

FORWARD LH SENSOR Eng·Room HARNESS – An assembly of two correct carrying wires which connects the Forward LH discriminating sensor to SRS harness.

FORWARD RH SENSOR Eng·Room HARNESS JUMPER – An assembly of two current carrying wires which connects the Forward RH discriminating sensor to the SRS harness.

HIGHER PRIORITY FAULT – Each diagnostic trouble code is assigned a priority based on the detectability with other DTCs present. The priority corresponds to the detectability of the malfunction ONLY, and does NOT relate to the criticality of the malfunction with respect to deployment or non–deployment under any given condition.

IGNITION CYCLE – The voltage at the DERM "Ignition 1" inputs, with ignition switch "ON," is within the normal operating voltage range for at least ten seconds before turning ignition switch "OFF."

IGNITION1 – A battery voltage(B+)circuit which is only powered with the ignition switch in the RUN,BULB TEST,or START positions.

INITIATOR – The electrical component inside the inflator module which, when sufficient current flows, sets off the chemical reaction that inflates the air bag.

"INITIATOR ASSEMBLY RESISTANCE TEST" – Tests performed once each ignition cycle when no malfunctions are detected during "Turn–ON" or "Continuous Monitoring." This test checks for the correct DERM configuration for the vehicle, shorts to "Ignition 1" in the deployment loops, high resistance or opens in the "Driver Side High," "Driver Side Low," "Passenger Side High" and "Passenger Side Low" circuits and measures the resistance of the inflator assembly consisting of: 1) Initiators, 2) SRS coil assembly(driver side only), 3) Connectors and associated wiring.

NORMAL OPERATING VOLTAGE RANGE – The voltage measured between the DERM "Ignition 1" terminals and "Ground" terminals is between 7.25 and 16 volts.

PASSENGER CURRENT SOURCE – An output of the DERM which injects current into the passenger inflator module circuit during the "Initiator Assembly Resistance Test."

PASSENGER INFLATOR MODULE – An assembly located in the right side of the I/P consisting of an inflatable bag, an inflator and an initiator.

SCAN TOOL – An off–board computer used to read diagnostic information from on–board computers via the data link connector.

SERIAL DATA – Information representing the status of the SRS.

SRS – Supplemental Restraint System.

SRS COIL ASSEMBLY – An assembly of two current–carrying coils in the driver deployment loop that allows the rotation of the steering wheel while maintaining the continuous contact of the driver deployment loop to the driver inflator module.

SRS WIRING HARNESS – The wires and connectors that electrically connect the components in the SRS.

"10 MINUTE LOOP TEST" – Portions of the "Initiator Assembly Resistance Test" are repeated every ten minutes during an ignition cycle. These are the check for shorts to "Ignition 1" in the deployment loops and the check for an open discriminating sensor interconnect circuit.

"TURN–ON" – Test which the DERM performs on the SRS once during each ignition cycle immediately after "Ignition 1" voltage is applied to the DERM and before "Continuous Monitoring."

36VLR – The 36–volt loop reserve energy supplies from the DERM which provide deployment power when vehicle voltage is low or lost in a frontal crash.

36 VLR DELAY – Changing of the 36 VLR power supplies is inhibited briefly during "Turn–ON." This allows detection of certain malfunctions related to "Ignition 1" voltage which cannot be tested with 36 volts present.

DIAGNOSIS

WARNING: TO AVOID DEPLOYMENT WHEN TROUBLESHOOTING THE SRS, DO NOT USE ELECTRICAL TEST EQUIPMENT SUCH AS A BATTERY-POWERED OR AC-POWERED VOLTMETER,OHMMETER,ETC., OR ANY TYPE OF ELECTRICAL EQUIPMENT OTHER THAN THAT SPECIFIED IN THIS MANUAL. DO NOT USE A NON-POWERED PROBE TYPE TESTER. INSTRUCTIONS IN THIS MANUAL MUST BE FOLLOWED CAREFULLY, OTHERWISE PERSONAL INJURY MAY RESULT.

DIAGNOSTIC TROUBLE CODES

The "SRS Diagnostic System Check" must always be the starting point of any SRS diagnosis. The "SRS Diagnostic System Check" checks for proper "AIR BAG" warning lamp operation and checks for SRS diagnostic trouble codes using the scan tool.

1. Current diagnostic trouble codes – Malfunctions that are presently being detected. Current diagnostic trouble codes are stored in RAM(Random Access Memory).
2. History diagnostic trouble codes – All malfunctions detected since the last time the history memory was cleared. History diagnostic trouble codes are stored in EEPROM.

SCAN TOOL DIAGNOSTICS

A scan tool is used to read current and history diagnostic trouble codes and to clear all diagnostic trouble codes after a repair is completed. The scan tool must be updated to communicate with the SRS through a replaceable cartridge before it can be used for SRS diagnostics. To use the scan tool, connect it to the data link connector and turn the ignition switch "ON." The scan tool reads serial data from the DERM "Serial Data" line terminal "A11" to the data link connector terminal "2".

USE OF SPECIAL TOOLS

WARNING: TO AVOID DEPLOYMENT WHEN TROUBLESHOOTING THE SRS, DO NOT USE ELECTRICAL TEST EQUIPMENT SUCH AS A BATTERY POWERED OR AC POWERED VOLTMETER, OHMMETER, ETC., OR ANY TYPE OF ELECTRICAL EQUIPMENT OTHER THAN THAT SPECIFIED IN THIS MANUAL. DO NOT USE A NON-POWERED PROBE TYPE TESTER. INSTRUCTIONS IN THIS MANUAL MUST BE FOLLOWED CAREFULLY, OTHERWISE PERSONAL INJURY MAY RESULT. YOU SHOULD BE FAMILIAR WITH THE TOOLS LISTED IN THIS SECTION UNDER THE HEADING SRS SPECIAL TOOLS."

You should be able to measure voltage and resistance. You should be familiar with proper use of a scan tool such as the Tech 1 Diagnostic Computer TK-0, SRS Driver/Passenger Load Tool J-41433, Connector Test Adapter Kit J-35616-A, and the DVM(Digital Multimeter)J-39200.

SRS CONNECTOR BODY FACE VIEWS

DUAL POLE ARMING SENSOR

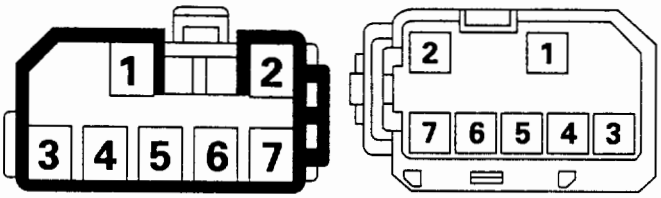

DERM

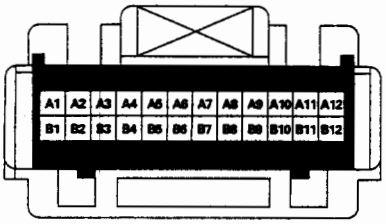

DRIVER INFLATOR

PASSENGER INFLATOR

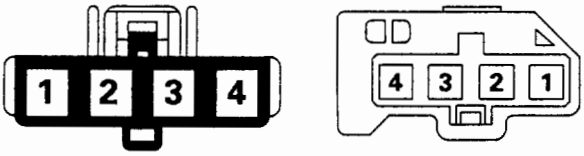

FORWARD DISCRIMINATING SENSOR-LH

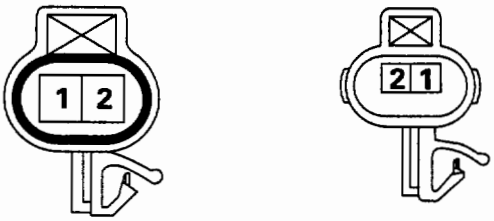

FORWARD DISCRIMINATING SENSOR-RH

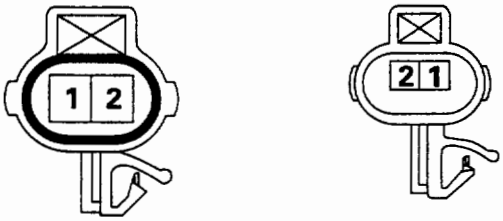

REPAIRS AND INSPECTIONS REQUIRED AFTER AN ACCIDENT

NOTE

- If any SRS components are damaged, they must be replaced. If SRS component mounting points are damaged, they must be replaced.
- Never use SRS parts from another vehicle. This does not include remanufactured parts purchased from an authorized dealer; they may be used for SRS repairs.
- Do not attempt to service discriminating sensors, the dual pole arming sensor, the DERM, the SRS coil assembly, or the inflator modules. Service of these items is by replacement only.
- Verify the part number of replacement inflator modules.

CAUTION: PROPER OPERATION OF THE SENSORS AND SUPPLEMENTAL RESTRAINT SYSTEM (SRS) REQUIRES THAT ANY REPAIRS TO THE VEHICLE STRUCTURE RETURN IT TO THE ORIGINAL PRODUCTION CONFIGURATION. DEPLOYMENT REQUIRES, AT A MINIMUM, REPLACEMENT OF THE SENSORS, THE INFLATOR MODULE, AND DIMENSIONAL INSPECTION OF THE STEERING COLUMN. ANY VISIBLE DAMAGE TO THE DERM MOUNTING BRACKET(S) REQUIRES REPLACEMENT, SENSORS MUST BE REPLACED, AND THE STEERING COLUMN MUST BE DIMENSIONALLY INSPECTED, WHETHER DEPLOYMENT OCCURRED OR NOT.

ACCIDENT WITH DEPLOYMENT–COMPONENT REPLACEMENT AND INSPECTIONS

Certain SRS components must be replaced for damage after a frontal crash involving air bag deployment. Those components are:

- Inflator modules.
- All sensors. It is include among the Dual pole Arming Sensor.

CAUTION

- **Refer to "Sensor Replacement Guidelines" below for important information on sensor replacement in both deployment and non–deployment crashes.**
- SRS coil assembly, Inspect wiring and connector for any signs of scorching, melting, or damage due to excessive heat. Replace if damaged. Refer to this in section 3.

ACCIDENT WITH OR WITHOUT DEPLOYMENT–COMPONENT INSPECTIONS

Certain SRS and restraint system components must be inspected after any crash, whether the air bag deployed or not. Those components are:

- Steering column–Dimensionally inspect per "Checking Steering Column for Accident Damage" in section 3.
- Sensors, if in the area of accident damage. If with deployment, All sensors must be replaced.

CAUTION

- **Refer to "Sensor Replacement Guidelines" below for important information on sensor replacement in both deployment and non–deployment crashes.**
- Knee bolsters and mounting points–Inspect for any distortion, bending, cracking, or other damage.
- I/P steering column reinforcement plate–Inspect for any distortion, bending, cracking, or other damage.
- I/P braces–Inspect for any distortion, bending, cracking, or other damage.
- Seat belts and mounting points–Refer to "Seat Belts" in SECTION 10.

SENSOR REPLACEMENT GUIDELINES

SRS sensor replacement policy requires replacement of the all sensors, after crash Involving Air Bag Deployment.

WIRING DAMAGE

If any SRS wire harness is damaged, it should be replaced. Don't repair SRS HARNESS. It is replace only.

SRS CONNECTOR (PLASTIC BODY AND TERMINAL METAL PIN) DAMAGE

If any connector or terminal in the SRS wire harness (except pigtails) is damaged, it should be replaced.

SRS WIRE PIGTAIL DAMAGE

If the wiring pigtail (a wire or wires attached directly to the device, not by a connector)is damaged, the entire component(with pigtail)must be replaced. Examples of "pigtail" components are the driver inflator module, the passenger inflator module, the discriminating sensors, the dual pole arming sensor and the SRS coil assembly.

SRS WIRE DAMAGE

If any wire except the pigtail is damaged, the wire should be replaced.

ON-VEHICLE SERVICE

SERVICE PRECAUTIONS

WARNING: WHEN PERFORMING SERVICE ON OR AROUND SRS COMPONENTS OR SRS WIRING, FOLLOW THE PROCEDURES LISTED BELOW TO TEMPORARILY DISABLE THE SRS. FAILURE TO FOLLOW PROCEDURES COULD RESULT IN POSSIBLE AIR BAG DEPLOYMENT, PERSONAL INJURY OR OTHERWISE UNNEEDED SRS REPAIRS.

The DERM in Driver–Passenger SRS can maintain sufficient voltage to cause a deployment for up to 2 minutes after the ignition switch is turned "OFF," the battery is disconnected, or the fuse powering the DERM is removed.

Many of the service procedures require removal of the "AIR BAG" fuse, and disconnection of the inflator modules from the deployment loop to avoid an accidental deployment. If the inflator module is disconnected from the deployment loop as noted in the "Disabling the SRS" procedure that follows, service can begin immediately without waiting for the 2–minute time period to expire.

DISABLING THE SRS

REMOVAL

Turn the ignition switch to "OFF"

1. Remove SRS fuse C-21, C-22, C-23 and C-24 from left dash side lower fuse block.
2. Disconnect yellow 3–way connector at the base of steering column.
3. Remove I/P compartment door assembly, Refer to "Passenger inflator module replacement" in section 9J-132.
4. Disconnect yellow 4–way connector behind the I/P compertment door assembly.

IMPORTANT

- With the "AIR BAG" fuse removed and ignition switch "ON," if Fuse 21 left. the "AIR BAG" warning lamp will be "ON." This is normal operation and does not indicate an SRS malfunction.

ENABLING THE SRS

INSTALLATION

Turn ignition switch to "LOCK" and remove key.

1. Connect yellow 4–way connector for passenger inflator module.
2. I/P compartment door assembly, Refer to "Passenger inflator module replacement" in section 9J-3.
3. Connect yellow 2–way connector at the base of the steering column.
4. Install "AIR BAG" fuse C-21, C-22, C-23 and C-24 to left dash side lower fuse block.

Turn ignition switch to "RUN" and verify that the "AIR BAG" warning lamp flashes seven times and then turns "OFF" If it does not operate as described, perform the "SRS Diagnostic System Check" in section 9J–2.

HANDLING/INSTALLATION/DIAGNOSIS

1. Inflator modules should not be subjected to temperatures above 65°C(150°F).
2. Discriminating sensors, inflator modules, arming sensors, or DERMs should not be used if they have been dropped from a height of 91.4 centimeters (3feet).
3. When a discriminating sensor or arming sensor is replaced, it must be oriented with the arrow on the sensor pointing toward the front of the vehicle. It is very important for the discriminating sensors and arming sensor to be located flat on the mounting surface, parallel to the vehicle datum line. It is important that the sensor mounting surface is free of any dirt or other foreign material.
4. Do not apply power to the SRS unless all components are connected or a diagnostic chart requests it, as this will set a diagnostic trouble code.
5. The "SRS Diagnostic System Check" must be the starting point of any SRS diagnostics. The "SRS Diagnostic System Check" will verify proper "AIR BAG" warning lamp operation and will lead you to the correct chart to diagnose any SRS malfunctions. Bypassing these procedures may result in extended diagnostic time, incorrect diagnosis, and incorrect parts replacements.

INFLATOR MODULE HANDLING/SHIPPING/SCRAPPING

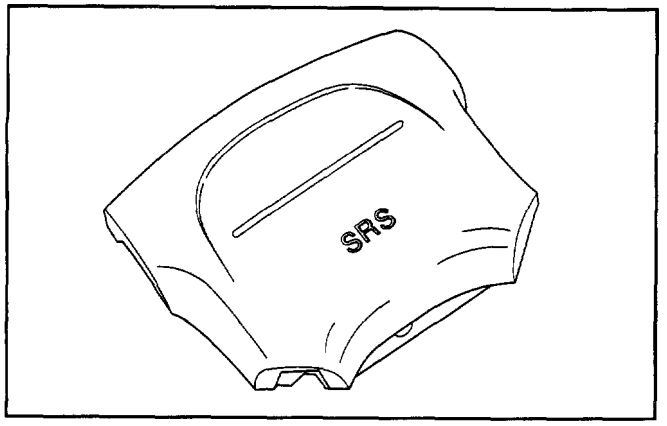

LIVE (UNDEPLOYED) INFLATOR MODULE

Special care is necessary when handling and storing a live (undeployed) inflator module. The rapid gas generation produced during deployment of the air bag could cause the inflator module, or an object in front of the inflator module, to be thrown through the air in the unlikely event of an accidental deployment.

WARNING: WHEN CARRYING A LIVE INFLATOR MODULE, MAKE SURE THE BAG OPENING IS POINTED AWAY FROM YOU. IN CASE OF AN ACCIDENTAL DEPLOYMENT, THE BAG WILL THEN DEPLOY WITH MINIMAL CHANCE OF INJURY. NEVER CARRY THE INFLATOR MODULE BY THE WIRES OR CONNECTOR ON THE UNDERSIDE OF THE MODULE.WHEN PLACING A LIVE INFLATOR MODULE ON A BENCH OR OTHER SURFACE, ALWAYS FACE THE BAG AND TRIM COVER UP, AWAY FROM THE SURFACE. THIS IS NECESSARY SO THAT A FREE SPACE IS PROVIDED TO ALLOW THE AIR BAG TO EXPAND IN THE UNLIKELY EVENT OF ACCIDENTAL DEPLOYMENT. NEVER REST A STEERING COLUMN ASSEMBLY ON THE STEERING WHEEL WITH THE INFLATOR MODULE FACE DOWN AND COLUMN VERTICAL. OTHERWISE, PERSONAL INJURY MAY RESULT.

INFLATOR MODULE SHIPPING PROCEDURES FOR LIVE (UNDEPLOYED) INFLATOR MODULES

Service personnel should refer to the latest Service Bulletins for proper SRS inflator module shipping procedures.

DEPLOYED INFLATOR MODULE

After the inflator module has been deployed, the surface of the air bag may contain a powdery residue. This powder consists primarily of cornstarch (used to lubricate the bag as it inflates) and byproducts of the chemical reaction. Sodium hydroxide dust(similar to lye soap) is produced as a byproduct of the deployment reaction. The sodium hydroxide then quickly reacts with atmospheric moisture and is converted to sodium carbonate and sodium bicarbonate (baking soda). Therefore, it is unlikely that sodium hydroxide will be present after deployment. As with any procedures, you should wear gloves and safety glasses.

INFLATOR MODULE SCRAPPING PROCEDURE

During the course of a vehicle's useful life, certain situations may arise which will necessitate the disposal of a live (undeployed) inflator module. This information covers proper procedures for disposing of a live inflator module.

Before a live inflator module can be disposed of, it must be deployed. Live inflator modules must not be disposed of through normal refuse channels.

WARNING: FAILURE TO FOLLOW PROPER SUPPLEMENTAL RESTRAINT SYSTEM (SRS) INFLATOR MODULE DISPOSAL PROCEDURES CAN RESULT IN AIR BAG DEPLOYMENT WHICH MAY CAUSE PERSONAL INJURY. UNDEPLOYED INFLATOR MODULES MUST NOT BE DISPOSED OF THROUGH NORMAL REFUSE CHANNELS. THE UNDEPLOYED INFLATOR MODULE CONTAINS SUBSTANCES THAT CAN CAUSE SEVERE ILLNESS OR PERSONAL INJURY IF THE SEALED CONTAINER IS DAMAGED DURING DISPOSAL. DISPOSAL IN ANY MANNER INCONSISTENT WITH PROPER PROCEDURES MAY BE A VIOLATION OF FEDERAL, STATE, AND/OR LOCAL LAW.

In situations which require deployment of a live inflator module, deployment may be accomplished inside or outside the vehicle. The method employed depends upon the final disposition of the particular vehicle, as noted in "Deployment Outside Vehicle" and "Deployment Inside Vehicle" in this section.

DEPLOYMENT OUTSIDE VEHICLE (DRIVER INFLATOR MODULE)

Deployment outside the vehicle is proper when the vehicle is to be returned to service. This includes, for example, situations in which the vehicle will be returned to useful service after a functionally or cosmetically deficient inflator module is replaced. Deployment and disposal of a malfunctioning inflator module is, of course, subject to any required retention period.

For deployment of a live (undeployed) inflator module outside the vehicle, the deployment procedure must be followed exactly. Always wear safety glasses during this deployment procedure until a deployed inflator module is scrapped or until an undeployed inflator module is shipped. Before performing the procedures, you should be familiar with servicing the SRS and with proper handling of the inflator module. Procedures should be read fully before they are performed.

The following procedure requires use of J–41434 SRS deployment harness with appropriate pigtail adapter. Do not attempt procedure without J–41434 adapter.

WARNING: FAILURE TO FOLLOW PROCEDURES IN THE ORDER LISTED MAY RESULT IN PERSONAL INJURY. NEVER CONNECT DEPLOYMENT HARNESS TO ANY POWER SOURCE BEFORE CONNECTING DEPLOYMENT HARNESS TO THE DRIVER INFLATOR MODULE. DEPLOYMENT HARNESS SHALL REMAIN SHORTED AND NOT BE CONNECTED TO A POWER SOURCE UNTIL THE AIR BAG IS TO BE DEPLOYED. THE INFLATOR MODULE WILL IMMEDIATELY DEPLOY THE AIR BAG WHEN A POWER SOURCE IS CONNECTED TO IT. WEAR SAFETY GLASSES THROUGHOUT THIS ENTIRE DEPLOYMENT AND DISPOSAL PROCEDURE.

NOTE

- This information applies only to driver inflator modules. Refer to "Deployment Outside Vehicle(Passenger Inflator Module)" in this section for information on passenger inflator module scrapping.

1. Turn ignition switch to "LOCK," remove key and put on safety glasses.
2. Inspect J–41434 SRS Deployment Harness and appropriate pigtail adapter for damage. If harness or pigtail adapter is damaged, discard and obtain a replacement.

3. Short the two SRS deployment harness leads together by fully seating one banana plug into the other. SRS deployment harness shall remain shorted and not be connected to a power source until the air bag is to be deployed.

4. Connect the appropriate pigtail adapter to the SRS deployment harness (Figure 16).

5. Remove driver inflator module from vehicle. Refer to Inflator module Removal in this Section 9J3.

WARNING: WHEN STORING A LIVE INFLATOR MODULE OR WHEN LEAVING A LIVE INFLATOR MODULE UNATTENDED ON A BENCH OR OTHER SURFACE, ALWAYS FACE THE BAG AND TRIM COVER UP AND AWAY FROM THE SURFACE. THIS IS NECESSARY SO THAT A FREE SPACE IS PROVIDED TO ALLOW THE AIR BAG TO EXPAND IN THE UNLIKELY EVENT OF ACCIDENTAL DEPLOYMENT. FAILURE TO FOLLOW PROCEDURES MAY RESULT IN PERSONAL INJURY.

6. Place the driver inflator module on a work bench or other surface away from all loose or flammable objects with its vinyl trim cover facing up, away from the surface.

7. Clear a space on the ground about 185 cm (six feet) in diameter where the driver inflator module is to be deployed. A paved, outdoor location where there is no activity is preferred. If an outdoor location is not available, a space on the shop floor where there is no activity and sufficient ventilation is recommended. Ensure no loose or flammable objects are within the deployment area.

8. Place the driver inflator module, with its trim cover facing up, on the ground in the space just cleared.

9. Stretch the SRS deployment harness and pigtail adapter from the driver inflator module to its full length.

10. Place a power source near the shorted end of the SRS deployment harness. Recommended application: 12 volts minimum, 2 amps minimum. A vehicle battery is suggested.

11. Connect the driver inflator module to the pigtail adapter on the SRS deployment harness. Deployment harness shall remain shorted and not be connected to a power source until the air bag is to be deployed. The driver inflator module will immediately deploy the air bag when a power source is connected to it.

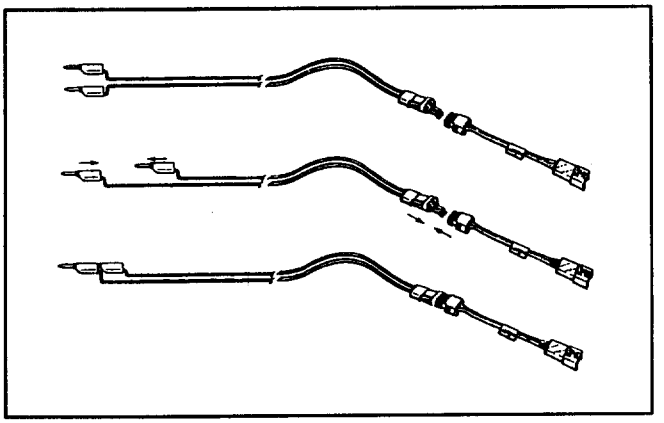

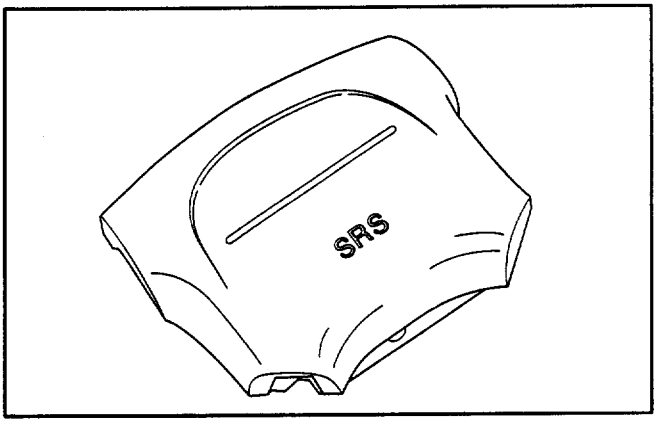

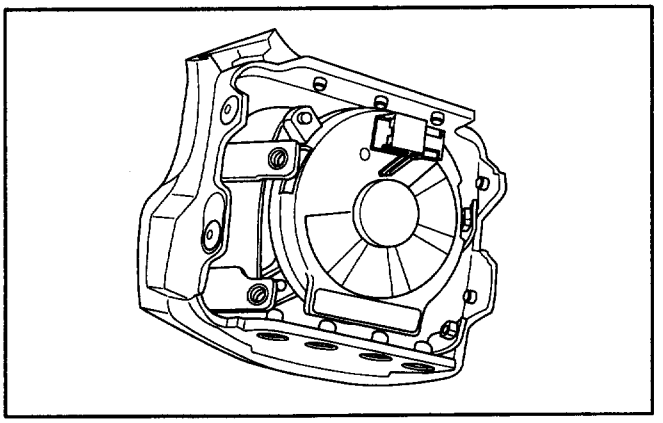

NOTE: Ensure that the pigtail adapter is firmly seated into the driver inflator module connector. Failure to fully seat the connectors may leave the shorting bar located in the driver inflator module connector functioning (shorted) and may result in non–deployment of the driver inflator module.

12. Verify that the area around the driver inflator module is clear of all people and loose or flammable objects.
13. Verify that the driver inflator module is resting with its trim cover facing up.
14. Notify all people in the immediate area that you intend to deploy the driver inflator module. The deployment will be accompanied by a loud noise which may startle the uninformed.
15. Separate the two banana plugs on the SRS deployment harness.

NOTE: When the air bag deploys, the driver inflator module may jump about 30 cm (one foot) vertically. This is a normal reaction of the driver inflator module to the force of the rapid gas expansion inside the air bag.

NOTE: When the air bag deploys, the rapid gas expansion will create a loud noise. Notify all people in the immediate area that you intend to deploy the driver inflator module.

16. Connect the SRS deployment harness wires to the power source to immediately deploy the driver inflator module. Recommended application: 12 volts minimum, 2 amps minimum. A vehicle battery is suggested.
17. Disconnect the SRS deployment harness from the power source.
18. Short the two SRS deployment harness leads together by fully seating one banana plug into the other.
19. In the unlikely event that the driver inflator module did not deploy after following these procedures, proceed immediately with Steps 24 through 27. If the driver inflator module did deploy, proceed with Steps 20 through 23.
20. Put on a pair of shop gloves to protect your hands from possible irritation and heat when handling the deployed driver inflator module.After the driver inflator module has been deployed, the surface of the air bag may contain a powdery residue. This power consists primarily of cornstarch(used to lubricate the bag as it inflates) and byproducts of the chemical reaction. Sodium hydroxide dust(similar to lye soap) is produced as a byproduct of the deployment reaction.The sodium hydroxide then quickly reacts with the atmospheric moisture and is converted to sodium carbonate and sodium bicarbonate(baking soda). Therefore, it is unlikely that sodium hydroxide will be present after deployment. As a precaution, however, gloves and safely glasses are recommended to prevent any possible irritation of the skin or eyes.

WARNING: SAFETY PRECAUTIONS MUST BE OBSERVED WHEN HANDING A DEPLOYED INFLATOR MODULE. AFTER DEPLOYMENT, THE METAL SURFACES OF THE INFLATOR MODULE WILL BE VERY HOT. ALLOW THE INFLATOR MODULE TO COOL BEFORE HANDLING ANY METAL PORTION OF IT. DO NOT PLACE THE DEPLOYED INFLATOR MODULE NEAR ANY FLAMMABLE OBJECTS. FAILURE TO FOLLOW PROCEDURES MAY RESULT IN FIRE OR PERSONAL INJURY.

After a driver inflator module has been deployed, the metal canister and surrounding areas of the driver inflator module will be very hot. Do not touch the metal areas of the driver inflator module for about twenty minutes after deployment. If the deployed driver inflator module must be moved before it is cool, wear gloves and handle by the air bag or trim cover.

21. Disconnect the pigtail adapter from the driver inflator module as soon after deployment as possible. This will prevent damage to the pigtail adapter or SRS deployment harness due to possible contact with the hot driver inflator module canister. The pigtail can be reused. They should, however, be inspected for damage after each deployment and replaced if necessary.
22. Dispose of the deployed driver inflator module through normal refuse channels after it has cooled for at least 20 minutes.
23. Wash your hands with mild soap and water afterward.

NOTE: The remaining steps are to be followed in the unlikely event that the driver inflator module did not deploy after following these procedures.

24. Ensure that the SRS deployment harness has been disconnected from the power source and that its two banana plugs have been shorted together by fully seating one banana plug into the other.
25. Disconnect the pigtail adapter from the driver inflator module.

WARNING: WHEN STORING A LIVE INFLATOR MODULE OR WHEN LEAVING A LIVE INFLATOR MODULE UNATTENDED ON A BENCH OR OTHER SURFACE, ALWAYS FACE THE BAG AND TRIM COVER UP AND AWAY FROM THE SURFACE. THIS IS NECESSARY SO THAT A FREE SPACE ISRPROVIDED TO ALLOW THE AIR BAG TO EXPAND IN THE UNLIKELY EVENT OF ACCIDENTAL DEPLOYMENT. FAILURE TO FOLLOW PROCEDURES MAY RESULT IN PERSONAL INJURY.

26. Temporarily store the driver inflator module with its vinyl trim cover facing up, away from the surface upon which is rests.

27. Call the Technical Assistance group for further assistance.

DEPLOYMENT OUTSIDE VEHICLE (PASSENGER INFLATOR MODULE)

WARNING: FAILURE TO FOLLOW PROPER SRS INFLATOR MODULE DISPOSAL PROCEDURES CAN RESULT IN AIR BAG DEPLOYMENT WHICH MAY CAUSE PERSONAL INJURY. UNDEPLOYED INFLATOR MODULES MUST NOT BE DISPOSED OF THROUGH NORMAL REFUSE CHANNELS. THE UNDEPLOYED INFLATOR MODULE CONTAINS SUBSTANCES THAT CAN CAUSE SEVERE ILLNESS OR PERSONAL INJURY IF THE SEALED CONTAINER IS DAMAGED DURING DISPOSAL. DISPOSAL IN ANY MANNER INCONSISTENT WITH PROPER PROCEDURES MAY BE A VIOLATION OF FEDERAL, STATE AND/OR LOCALLAWS.

Deployment out of the vehicle is proper when the vehicle is to be returned to service. This includes, for example, situations in which a functionally or cosmetically deficient inflator module is replaced. Deployment and disposal of an inflator module is, of course, subject to any required reterntion period.

For deployment of a live inflator module out of the vehicle, the deployment procedure must be followed exactly. ALWAYS wear safety glasses during this deployment procedure until the deployed inflator module is scrapped. Before performing the procedures you should be familiar with servicing the SRS system and with proper handling of the inflator module. Procedures should be read fully before they are performed.

The following procedure requires use of J–41434 SIR Deployment Harness with the appropriate pigtail adapter. The procedure also requires the use of J–41497 Passenger Side SRS Module Deployment Fixture. Do not attempt this procedure without J–41434 and adapter, and J–41497.

WARNING: FAILURE TO FOLLOW PROCEDURES IN THE ORDER LISTED MAY RESULT IN PERSONAL INJURY. NEVER CONNECT DEPLOYMENT HARNESS TO ANY POWER SOURCE BEFORE CONNECTING DEPLOYMENT HARNESS TO THE INFLATOR MODULE. DEPLOYMENT HARNESS SHALL REMAIN SHORTED AND NOT BE CONNECTED TO A POWER SOURCE UNTIL THE AIRBAG IS TO BE DEPLOYED. THE INFLATOR MODULE WILL IMMEDIATELY DEPLOY THE AIRBAG WHEN A POWER SOURCE IS CONNECTED TO IT. WEAR SAFETY GLASSES THROUGHOUT THIS ENTIRE DEPLOYMENT AND DISPOSAL PROCEDURE.

NOTE: This information applies only to passenger inflator modules. Information for disposing of a live driver inflator module can be found in the applicable service manual or in a service bulletin.

1. Turn ignition switch to "LOCK", remove key, and put on safety glasses.

2. Inspect J–41434 SRS Deployment Harness and appropriate pigtail adapter for damage. If harness or pigtail is damaged, discard and obtain a replacement.

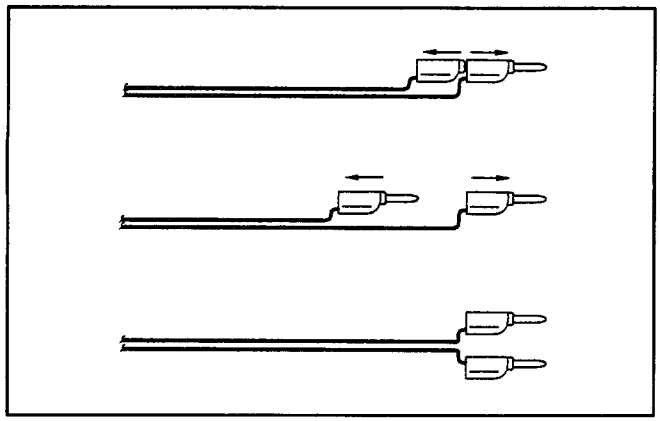

3. Short the two SRS Deployment Harness leads together by fully seating one banana plug into the other. The SRS Deployment Harness shall remain shorted and not be connected to a power source untile the air bag is to be deployed.

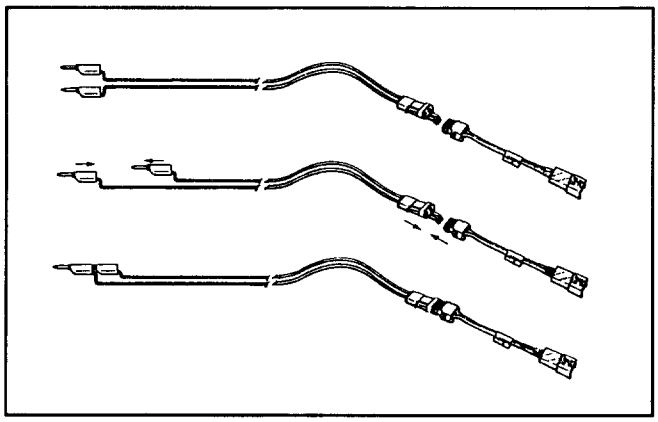

4. Connect the appropriate pigtail adaptor to the SRS Deployment Harness.
5. Remove inflator module from vehicle. Refer to "On–Vehicle Service" in this Section 9J3.
6. Clear a space on the ground approximately 185 cm (six feet) in diameter where the fixture with attached inflator module is to be placed for deployment. A paved outdoor location where there is no activity is preferred. If an outdoor location is not available, a space on the shop floor where is no activity and sufficient ventilation is recommened. Ensure that no loose or flammable objects are within the deployment area.
7. Place the J–41497 on the bench vice. This is necessary to provide sufficient stabilization of the fixture during deployment.
8. Attach the passenger inflator module in the J–41497 Passenger Side SRS Module Deployment Fixture using the Flange/Arm Mounting Method as approprita (most applications will work best with the Flange/Arm Mounting Method). Inflator module must be mounted such that the bag will deploy upward. SECURELY HAND–TIGHTEN ALL FASTENERS PRIOR TO DEPLOYMENT.
9. Streth the SRS Deployment Harness and pigtail adaptor from the inflator module to its full length.
10. Place a power source near the shorted end of the SRS Deployment Harness. (Recommended applocation: 12 volts mininum, 2 amps mini–mum. A vehicle battery is suggested.)
11. Connect the inflator module to the pigtail adapter on the SRS Deployment Harness. The SRS Deployment Harness shall remain shorted and not be connected to a power source until the air bag is to be deployed. The inflator module will immediately deploy the air bag when a power source is connected to it.

WARNING: ENSURE THAT THE PIGTAIL ADAPTOR IS FIRMLY SEATED INTO THE INFLATOR MODULE CONNECTOR. FAILURE TO FULLY SEAT THE CONNECTORS MAY LEAVE THE SHORTING BAR LOCATED IN THE INFLATOR MODULE CONNECTOR FUNCTIONING (SHORTING THE DEPLOYMENT CIRCUIT) AND MAY RESULT IN NONDEPLOYMENT OF THE INFLATOR MODULE.

12. Verify that the area around the inflator module is clear of all people and loose or flammable objects.

13. Verify that the inflator module is firmly and properly in J–41497.

14. Notify all people in the immediate area of your intention to deploy the inflator module. The deployment will be accompanied by a substantial noise which may startle the uninformed.

15. Separate the two banana plugs on the SRS Deployment Harness that were shorted together in Step 3.

NOTE: When air bag depolys, the rapid gas expansion will create a substantial noise. Notify all people in the immediate area that you intend to deploy the inflator module.

WARNING: DEPLOYMENT HARNESS SHELL REMAIN SHORTED AND NOT BE CONNECTED TO A POWER SOURCE UNTIL THE AIR BAG IN TO BE DEPLOYED. THE INFLATOR MODULE WILL IMMEDIATELY DEPLOY THE AIR BAG WHEN A POWER SOURCE IS CONNECTED TO IT. CONNECTING THE DEPLOYMENT HARNESS TO THE POWER SOURCE SHOULD ALWAYS BE THE LAST STEP IN THE INFLATOR MODULE DEPLOYMENT PROCEDURE. FAILURE TO FOLLOW PROCEDURES IN THE ORDER LISTED MAY RESULT IN PERSONAL INJURY.

16. Connect the SRS Deployment Harness wires to the power source to immediately deploy the inflator module.

17. Disconnect the SRS Deployment Harness from the power source.

18. Short the two SRS Deployment Harness leads together by fully seating one banana plug into the other.

19. In the unlikely event that the inflator module did not deploy after following these procedures, proceed immediately with Steps 24 through 27. If the inflator module deployed as intended, proceed with Steps 20 through 23.

20. Put on a pair of shop gloves to protect your hands from possible irritation and heat when handling the deployed inflator module. After the inflator module has been deployed, the surface of the air bag may contain a powdery residue. This powder consists primarily of cornstarch (used to lubricate the bag as it inflates) and byproducts of the chemical reaction. Sodium hydroxide dust (similar to lye soap) is produced as a byproduct of the deployment reaction. The sodium hydroxide quickly reacts with the atmospheric moisture and is convertered to sodium carbonate and sodium bicarbonate (baking soda). Therefore, it is unlikely that sodium hydroxide will be present for very long after deplyment. As a precaution, however, gloves and safety glasses are recommended to prevent any possible irritation of the skin or eyes.

WARNING: SAFETY PRECAUTIONS MUST BE OBSERVED WHEN HANDLING A DEPLOYED INFLATOR MODULE. AFTER DEPLOYMENT, THE METAL SURFACES OF THE INFLATOR MODULE WILL BE HOT. ALLOW THE INFLATOR MODULE TO COOL BEFORE HANDLING ANY METAL PORTION OF IT. DO NOT PLACE THE DEPLOYED INFLATOR MODULE NEAR ANY FLAMMABLE OBJECTS. FAILURE TO FOLLOW PROCEDURES MAY RESULT IN FIRE OR PERSONAL INJURY.
AFTER AN INFLATOR MODULE HAS BEEN DEPLOYED, THE METAL CANISTER AND SURROUDING AREAS OF THE INFLATOR MODULE WILL BE HOT. DO NOT TOUCH THE METAL AREAS OF THE INFLATOR MODULE FOR ABORT TWENTY MINUTES AFTER DEPLOYMENT. IF THE DEPLOYED INFLATOR MODULE MUST BE MOVED BEFORE IT IS COOL, WEAR GLOVES AND HANDLE BY THE AIR BAG ITSELF.

21. Disconnect the pigtail adapter from the inflator module as soon after deployment as possible to avoid damage to the pigtail adaptor or SRS Deployment Harness from contacting the hot inflator module canister. The pigtail adapter and SIR Deployment Harness are designed to be reused. They should, however, be inspected for damage after each deployment and replaced if necessary.

22. Dispose of the deployed inflator module trough normal refuse channels afterit has cooled for at least 20 minutes.

23. Wash your hands with mild soap and water afterward.

NOTE: The remaining steps are to be followed in the unlikely event that the inflator module did not deploy after following the above procedures.

24. Ensure that the SRS Deplyment Harness has been disconnected from the the power source and that its two banana plugs have been shorted together by fully seating one banana plug into the other.

25. Disconnect the pigtail adapter from the inflator module.

WARNING: WHEN STORING A LIVE INFLATOR MODULE OR WHEN LEAVING A LIVE INFLATOR MODULE UNATTENDED ON A BENCH OR OTHER SURFACE, ALWAYS FACE THE BAG UP AND AWAY FROM THE SURFACE. THIS IS NECESSARY SO THAT A FREE SPACE IS PROVIDED TO ALLOW THE

AIR BAG TO EXPAND IN THE UNLIKELY EVENT OF ACCEIDENTAL DEPLOYMENT. FAILURE TO FOLLOW PROCEDURES MAY RESULT IN PERSONAL INJURY.

26. Temporarily store the inflator module with the bag facing up, away from the surface upon which it rests.

27. Call the Technical Assistance group for further assistance.

DEPLOYMENT INSIDE VEHICLE(VEHICLE SCRAPPING PROCEDURE)

Deployment inside vehicle is proper when the vehicle is to be destroyed or salvaged for component parts. This includes, but is not limited to, the following situations.

1. The vehicle has completed its useful life.

2. The vehicle has been damaged beyond repair in a non–deployment type accident.

3. The vehicle has been stripped or damaged beyond repair in a theft.

4. The vehicle will be salvaged for component parts to be used on a vehicle with a different Vehicle Identification Number (VIN) as opposed to being rebuilt as same VIN. Never use SRS components from another vehicle. This is done to ensure SRS system integrity since only new SRS system components.

WARNING: FAILURE TO FOLLOW PROPER SRS INFLATOR MODULE DISPOSAL PROCEDURES CAN RESULT IN AIR BAG DEPLOYMENT WHICH MAY CAUSE PERSONAL INJURY. UNDEPLOYED INFLATOR MODULES MUST NOT BE DISPOSED OF THROUGH NORMAL REFUSE CHANNELS. THE UNDEPLOYED INFLATOR MODULE CONTAINS SUBSTANCES THAT CAL CAUSE SEVERE ILLNESS OR PERSONAL INJURY IF THE SEALED CONTAINER IS DAMAGED DURING DISPOSAL. DISPOSAL IN ANY MANNER INCONSISTENT WITH PROPER PROCEDURES MAY BE A VIOLATION OF FEDERAL, STATE AND/OR LOCAL LAWS.

1. Turn ignition switch to "LOCK," remove key and put on safety glasses.

2. Remove all loose objects from front seats.

3. Disconnect driver inflator module, yellow 3–way connector located at the base of the steering column.

4. Cut the driver inflator module yellow 2–way harness connector from the vehicle leaving at least 16 cm(six inches) of wire at the connector.

5. Strip 13 mm(1/2 inch) of insulation from each wire lead of the connector.

6. Cut two 900 cm(30 feet) deployment wires from 0.8mm^2(18 gauge) or thicker multi–strand wire. These wires will be used to fabricate the driver deployment harness.

7. Strip 13 mm(1/2 inch) of insulation from both ends of the wires cut in the previous step.

8. Short the wires by twisting together one end from each. Deployment wires shall remain shorted and not be connected to a power source until the air bag is to be deployed.

WARNING: FAILURE TO FOLLOW PROCEDURES IN THE ORDER LISTED COULD RESULT IN PERSONAL INJURY. NEVER CONNECT DEPLOYMENT WIRES TO ANY POWER SOURCE BEFORE CONNECTING DEPLOYMENT WIRES TO THE INFLATOR MODULE LEADS. DEPLOYMENT WIRES SHALL REMAIN SHORTED AND NOT BE CONNECTED TO A POWER SOURCE UNTIL THE AIR BAG IS TO BE DEPLOYED. THE INFLATOR MODULE WILL IMMEDIATELY DEPLOY THE AIR BAG WHEN A POWER SOURCE IS CONNECTED TO IT. WEAR SAFETY GLASSES THROUGHOUT THIS ENTIRE DEPLOYMENT AND DISPOSAL PROCEDURE.

9. Twist together one connector wire lead to one deployment wire. The connection should be mechanically secure.

10. Bend twisted connection made in the previous step flat and wrap tightly with electrical tape to insulate and secure.

11. Twist together, bend and tape the remaining connector wire lead to the remaining deployment wire.

12. Connect the deployment harness to the driver inflator module, yellow 2–way connector at the base of the steering column. Route deployment harness out the driver side of the vehicle.

WARNING: DEPLOYMENT WIRES SHALL REMAIN SHORTED AND NOT BE CONNECTED TO A POWER SOURCE UNTIL THE AIR BAG IS TO BE DEPLOYED. THE INFLATOR MODULE WILL IMMEDIATELY DEPLOY THE AIR BAG WHEN A POWER SOURCE IS CONNECTED TO IT.
CONNECTING THE DEPLOYMENT WIRES TO THE POWER SOURCE SHOULD ALWAYS BE THE FINAL STEP IN THE INFLATOR MODULE DEPLOYMENT PROCEDURE. FAILURE TO FOLLOW PROCEDURES IN THE ORDER LISTED COULD RESULT IN PERSONAL INJURY.

13. Disconnect passenger inflator module, yellow 2–way connector located behind I/P compartment door assembly.

14. Cut the passenger inflator module harness connector from the vehicle leaving at least 16 cm(six inches) of wire at the connector).

15. Strip 13 mm(1/2 inch) of insulation from each wire lead of the connector.

16. Cut two 900 cm(30 feet) deployment wires from 0.8mm^2(18 gauge) or thicker multi–strand wire. These wires will be used to fabricate the passenger deployment harness.

17. Strip 13 mm (1/2inch)of insulation from both ends of the wires cut in the previous step.

18. Short the wires by twisting together one end from each. Deployment wires shall remain shorted and not be connected to a power source until the air bag is to be deployed.

WARNING: FAILURE TO FOLLOW PROCEDURES IN THE ORDER LISTED COULD RESULT IN PERSONAL INJURY. NEVER CONNECT DEPLOYMENT WIRES TO ANY POWER SOURCE BEFORE CONNECTING DEPLOYMENT WIRES TO THE INFLATOR MODULE LEADS. DEPLOYMENT WIRES SHALL REMAIN SHORTED AND NOT BE CONNECTED TO A POWER SOURCE UNTIL THE AIR BAG IS DEPLOYED? THE INFLATOR MODULE WILL IMMEDIATELY DEPLOY THE AIR BAG WHEN A POWER SOURCE IS CONNECTED TO IT. WEAR SAFETY GLASSES THROUGHOUT THIS ENTIRE DEPLOYMENT AND DISPOSAL PROCEDURE.

19. Twist together one connector wire lead to one deployment wire. The connection should be mechanically secure.

20. Bend twisted connection made in the previous step flat and wrap tightly with electrical tape to insulate and secure.

21. Twist together, bend and tape the remaining connector wire lead to the remaining deployment wire.

22. Connect the deployment harness to the passenger inflator module jumper, yellow 2–way connector located behind the I/P compartment door assembly. Route deployment harness out the passenger side of the vehicle.

WARNING: DEPLOYMENT WIRES SHALL REMAIN SHORTED AND NOT BE CONNECTED TO A POWER SOURCE UNTIL THE AIR BAG IS TO BE DEPLOYED. THE INFLATOR MODULE WILL IMMEDIATELY DEPLOY THE AIR BAG WHEN A POWER SOURCE IS CONNECTED TO IT. CONNECTING THE DEPLOYMENT WIRES SHOULD ALWAYS BE THE FINAL STEP IN THE INFLATOR MODULE DEPLOYMENT PROCEDURE. FAILURE TO FOLLOW PROCEDURES IN THE ORDER LISTED COULD RESULT IN PERSONAL INJURY.

23. Verify that the inside of the vehicle and the area surrounding the vehicle are clear of all people and loose or flammable objects.

24. Stretch the driver and passenger deployment harnesses to their full length.

25. Completely cover windshield area and front door window openings with a drop cloth, blanket or similar item. This reduced the possibility of injury due to possible fragmentation of the vehicle's glass or interior.

26. Notify all people in the immediate area that you intend to deploy the air bags. The deployment will be accompanied by a loud noise which may startle the uninformed.

27. Separate the two ends of the driver deployment harness wires.

WARNING: DEPLOYMENT WIRES SHALL REMAIN SHORTED AND NOT BE CONNECTED TO A POWER SOURCE UNTIL THE AIR BAG IS TO BE DEPLOYED. THE INFLATOR MODULE WILL IMMEDIATELY DEPLOY THE AIR BAG WHEN A POWER SOURCE IS CONNECTED TO IT. CONNECTING THE DEPLOYMENT WIRES TO THE POWER SOURCE SHOULD ALWAYS BE THE FINAL STEP IN THE INFLATOR MODULE DEPLOYMENT PROCEDURE. FAILURE TO FOLLOW PROCEDURES IN THE ORDER LISTED COULD RESULT IN PERSONAL INJURY.

NOTE: When the air bag deploys, the rapid gas expansion will create a loud noise. Notify all people in the immediate area that you intend to deploy the air bags.

28. Connect the driver deployment harness wires to a power source to immediately deploy the driver inflator module. Recommended application: 12 volts minimum, 2 amps minimum. A vehicle battery is suggested.

29. Separate the two ends of the passenger deployment harness wires.

WARNING: DEPLOYMENT WIRES SHALL REMAIN SHORTED AND NOT BE CONNECTED TO A POWER SOURCE UNTIL THE AIR BAG IS TO BE DEPLOYED. THE INFLATOR MODULE WILL IMMEDIATELY DEPLOY THE AIR BAG WHEN A POWER SOURCE IS CONNECTED TO IT. CONNECTING THE DEPLOYMENT WIRES TO THE POWER SOURCE SHOULD ALWAYS BE THE FINAL STEP IN THE INFLATOR MODULE DEPLOYMENT PROCEDURE. FAILURE TO FOLLOW PROCEDURES IN THE ORDER LISTED COULD RESULT IN PERSONAL INJURY.

30. Connect the passenger deployment harness wires to a power source to immediately deploy the passenger inflator module. Recommended application: 12 volts minimum, 2 amps minimum. A vehicle battery is suggested.
    After an inflator module has been deployed, the surface of the air bag may contain a powdery residue. This powder consists primarily of cornstarch (used to lubricate the bag as it inflates) and byproducts of the chemical reaction. Sodium hydroxide dust (similar to lye soap) is produced as a byproduct of the deployment reaction. The sodium

hydroxide then quickly reacts with atmospheric moisture and is converted to sodium carbonate and sodium bicarbonate (baking soda). Therefore, it is unlikely that sodium hydroxide will be present after deployment. As a precaution, however, gloves and safety glasses are recommended to prevent any possible irritation of the skin or eyes.

WARNING: SAFETY PRECAUTIONS MUST BE OBSERVED WHEN HANDLING A DEPLOYED INFLATOR MODULE. AFTER DEPLOYMENT, THE METAL SURFACES OF THE INFLATOR MODULE WILL BE VERY HOT. ALLOW THE INFLATOR MODULE TO COOL BEFORE HANDLING ANY METAL PORTION OF IT. DO NOT PLACE THE HOT DEPLOYED INFLATOR MODULE NEAR ANY FLAMMABLE OBJECTS. FAILURE TO FOLLOW PROCEDURES COULD RESULT IN FIRE OR PERSONAL INJURY.

After an inflator module has been deployed, the metal canister and surrounding areas of the inflator module will be very hot. Do not touch the metal areas of the inflator module for about 10 minutes after deployment. If the deployed inflator module must be moved before it is cool, wear gloves and handle by the air bag or vinyl trim.

31. Short the driver deployment harness wires by twisting together one end from each. Repeat this procedure for the passenger deployment harness.

32. Carefully remove drop cloth from vehicle and clean off any fragments or discard drop cloth entirely.

33. Disconnect driver deployment harness and passenger deployment harness from vehicle and discard.

34. In the unlikely event that either or both of the inflator modules did not deploy after following these procedures, proceed immediately with Steps 36 through 38. If the inflator module deployed proceed step 35.

35. With both air bags deployed, the vehicle may be scrapped in the same manner as a non–SRS equipped vehicle.

NOTE: The remaining steps are to be followed in the unlikely event that the inflator module didnot deploy ofter following these procedures.

36. Remove the undeployed inflator module(s) from the vehicle. For driver inflator module refer to in this section for passenger inflator module "On–Vehicle Service".

WARNING: WHEN STORING A LIVE INFLATOR MODULE OR WHEN LEAVING A LIVE INFLATOR MODULE UNATTENDED ON A BENCH OR OTHER SURFACE, ALWAYS FACE THE BAG AND TRIM COVER UP, AWAY FROM THE SURFACE. THIS IS NECESSARY SO THAT A FREE SPACE IS PROVIDED TO ALLOW THE AIR BAG TO EXPAND IN THE UNLIKELY EVENT OF ACCIDENTAL DEPLOYMENT. FAILURE TO FOLLOW PROCEDURES COULD RESULT IN PERSONAL INJURY.

37. Temporarily store the inflator module with the air bag opening facing up, away from the surface upon which it rests.

38. Call the Technical Assistance group for further assistance.

DEPLOYED INFLATOR MODULE HANDLING

After the inflator module has been deployed, the surface of the air bag may contain a powdery residue. This powder consists primarily of cornstarch (used to lubricate the bag as it inflates) and byproducts of the chemical reaction. Sodium hydroxide dust (similar to lye soap) is produced as a byproduct of the deployment reaction. The sodium hydroxide then quickly reacts with atmospheric moisture and is converted to sodium carbonate and sodium bicarbonate (baking soda). Therefore, it is unlikely that sodium hydroxide will be present after deployment. As with many service procedures, you should wear gloves and safety glasses.

SPECIAL TOOLS

WARNING: TO AVOID DEPLOYMENT WHEN TROUBLESHOOTING THE SRS, DO NOT USE ELECTRICAL TEST EQUIPMENT SUCH AS A BATTERY–POWERED OR AC–POWERED VOLTMETER, OHMMETER, ETC., OR ANY TYPE OF ELECTRICAL EQUIPMENT OTHER THAN THAT SPECIFIED IN THIS MANUAL. DO NOT USE A NON–POWERED PROBE TYPE TESTER. INSTRUCTIONS IN THIS MANUAL MUST BE FOLLOWED CAREFULLY, OTHERWISE PERSONAL INJURY MAY RESULT.

SRS DRIVER/PASSENGER LOAD TOOL

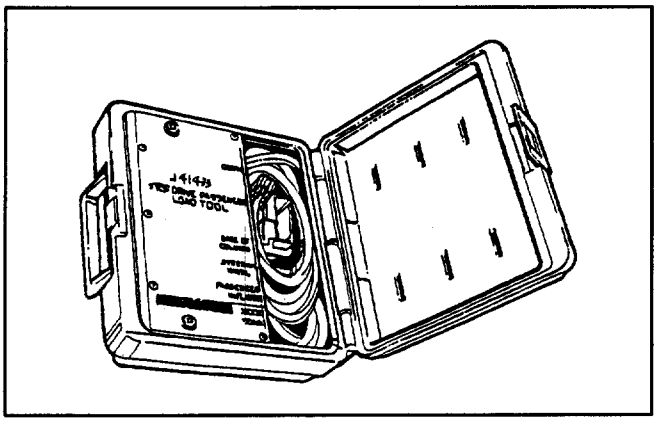

The SRS Driver/Passenger Load Tool J–41433 is used only when called for in this section. It is used as a diagnostic aid and safety device to prevent inadvertent inflator module deployment.

The load tool has four yellow connectors attached to its case.

The three small connectors are electrically functional and serve as resistive load substitutions. The large dummy connector does not serve as a load substitution but merely takes the physical place of the DERM connector when needed.

No more than two connectors are used at any time. One of the small connectors is used to substitute for the load of the driver inflator module when it is connected at the top of the column to the SRS coil assembly. Another small connector is used to substitute for the load of the driver inflator module and the SRS coil assembly when it is connected at the base of the column to the SRS wiring harness. The third small connector is used to substitute for the load of the passenger inflator module when connected to the passenger inflator module harness connector.

By substituting the resistance of the load tool when called for, a determination can be made as to whether an inflator circuit component is causing system malfunction and which component is causing the malfunction. The load tool should be used only when specifically called for in the diagnostic procedures.

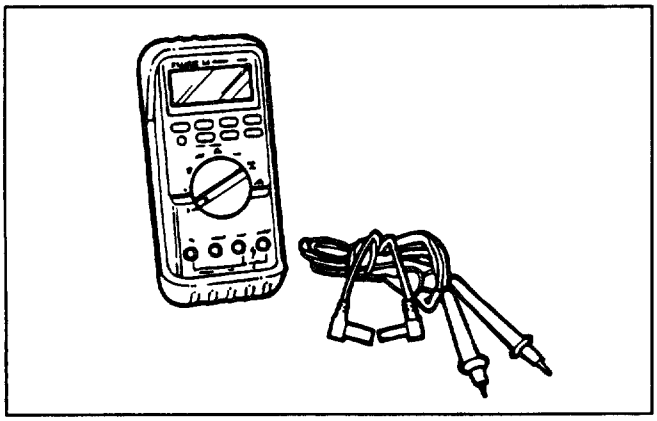

J 39200 DVM

The J 39200 DVM is the preferred DVM for use in SRS diagnosis and repair. However, J 34029–A may be used if J 39200 is not available. No other DVMs are approved for SRS diagnosis and repair.

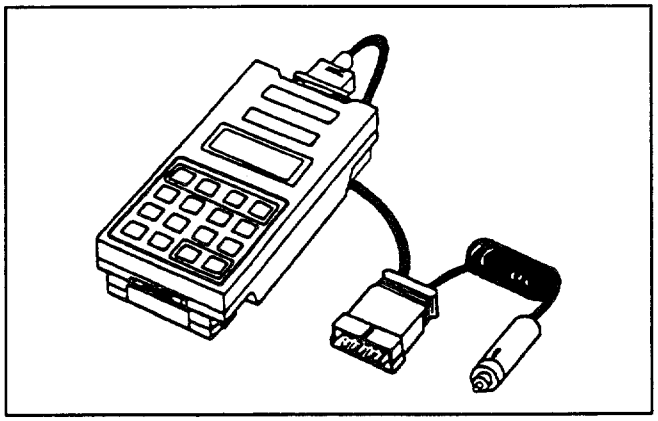

SCAN TOOL

The Tech 1 is used to read and clear SRS Diagnostic Trouble Codes (DTCs). Refer to the Tech 1 Operator's Manual for specific information on how to use the Tech 1.

Scan tools from other manufacturers may be used. Refer to the Operator's Manual for the tool for specific instructions.

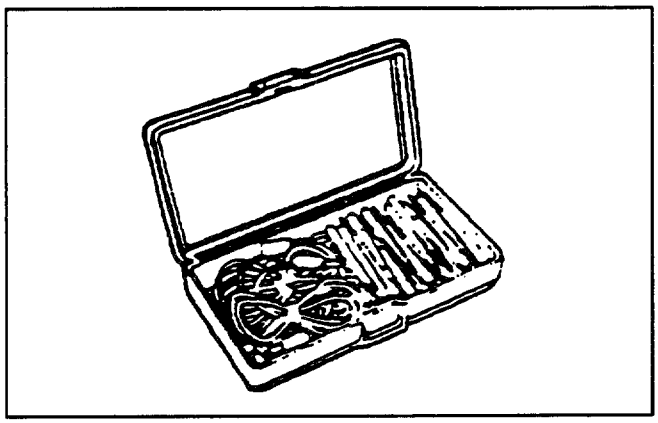

J 35616–A CONNECTOR TEST ADAPTER KIT

The J 35616–A Connector Test Adapter Kit must be used whenever a diagnostic procedure requests checking or probing a terminal. Using the appropriate adapter will ensure that no damage to the terminal will occur from the DVM prove, such as spreading or bending. The adapter will also give an idea of whether contact tension is sufficient, helping to find an open or intermittent open due to poor terminal contact.

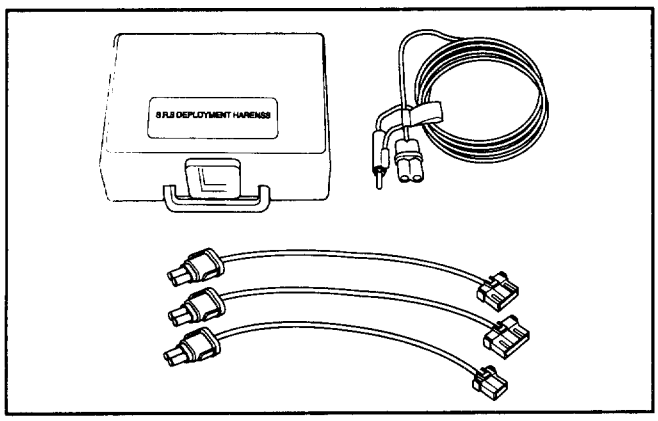

J–41434 SRS DEPLOYMENT TOOL

J 41497 SRS DEPLOYMENT FIXTURE

TABLE OF CONTENTS

SUPPLEMENTAL RESTRAINT SYSTEM (SRS)

SECTION 2 – SYSTEM DIAGNOSIS

CAUTION: WHEN FASTENERS ARE REMOVED, ALWAYS REINSTALL THEM AT THE SAME LOCATION FROM WHICH THEY WERE REMOVED. IF A FASTENER NEEDS TO BE REPLACED, USE THE CORRECT PART NUMBER FASTENER FOR THAT APPLICATION. IF THE CORRECT PART NUMBER FASTENER IS NOT AVAILABLE, A FASTENER OF EQUAL SIZE AND STRENGTH (OR STRONGER) MAY BE USED. FASTENERS THAT ARE NOT REUSED, AND THOSE REQUIRING THREAD LOCKING COMPOUND WILL BE CALLED OUT. THE CORRECT TORQUE VALUE MUST BE USED WHEN INSTALLING FASTENERS THAT REQUIRE IT. IF THE ABOVE CONDITIONS ARE NOT FOLLOWED, PARTS OR SYSTEM DAMAGE COULD RESULT.

HOW TO USE THIS SECTION 30
- Diagnostic Procedures 30
- Diagnostic Codes 30
- How to Read Trouble Codes 30
- How to Clear Trouble Codes 30
- Scan Tool Diagnostics 30
- Basic Knowledge Required 30
- Basic Electrical Circuits 30
- "Flash Code" Diagnostics 30

SYSTEM SCHEMATIC 31

SRS DIAGNOSTIC SYSTEM CHECK 32

TABLE A DERM INTEGRITY CHECK 34

TABLE B "AIR BAG" WARNING LAMP COMES "ON" STEADY 36

TABLE C "AIR BAG" WARNING LAMP DOES NOT COME "ON" 38

TABLE D "AIR BAG" WARNING LAMP DOES NOT COME "ON" STEADY DURING CRANK 40

DTC 14 DUAL POLE ARMING SENSOR DISCONNECTED 42

DTC 15 PASSENGER INITIATOR CIRCUIT RESISTANCE HIGH 44

DTC 16 PASSENGER INITIATOR CIRCUIT RESISTANCE LOW 46

DTC 17 PASSENGER INITIATOR CIRCUIT OPEN 48

DTC 18 DISCRIMINATING SENSOR INTERCONNECT OPEN 50

DTC 19 PASSENGER INITIATOR CIRCUIT VOLTAGE HIGH 52

DTC 21 DRIVER INITIATOR CIRCUIT RESISTANCE HIGH 54

DTC 22 DRIVER INITIATOR CIRCUIT RESISTANCE LOW 56

DTC 23 DRIVER INITIATOR CIRCUIT VOLTAGE HIGH 58

DTC 24 INITIATOR CIRCUIT VOLTAGE LOW 60

DTC 25 INITIATOR CIRCUIT SHORT TO IGNITION 66

DTC 26 DRIVER INITIATOR CIRCUIT OPEN 70

DTC 28 CURRENT SINK OR SOURCE FAILURE 72

DTC 31 DRIVER LOOP ENERGY RESERVE FEED OPEN 74

DTC 34 DUAL POLE ARMING SENSOR IGNITION FEED OPEN 76
DTC 35 DISCRIMINATING SENSOR OPEN OR MISSING 78
DTC 36 PASSENGER LOOP ENERGY RESERVE FEED OPEN 80
DTC 37 HYBRID INFLATOR LOW PRESSURE 82
DTC 42 LOOP ENERGY RESERVE VOLTAGE LOW 84
DTC 43 DRIVER SOURCE FEED LOW 86
DTC 44 PASSENGER SOURCE FEED LOW 88
DTC 51 FRONTAL CRASH DETECTED 90
DTC 52 DATA AREA FULL 92
DTC 53 DRIVER SIDE LOW HIGH RESISTANCE 94
DTC 54 PASSENGER SIDE LOW HIGH RESISTANCE 96
DTC 55 DERM INCOMPATIBILITY 98
DTC 61 SRS INDICATOR CIRCUIT FAILURE 100
DTC 62 REDUNDANT SRS INDICATOR CIRCUIT FAILURE 102
DTC 71 AND/OR 75 INTERNAL DERM FAULTCIRCUIT 104
DTC 81 DRIVER IGNITION DIODE OPEN 106
DTC 82 PASSENGER IGNITION DIODE OPEN 108
HISTORY DTC 83 DRIVER RESERVE DIODE SHORTED 110
HISTORY DTC 84 PASSENGER RESERVE DIODE SHORTED 112

MEMO

HOW TO USE THIS SECTION

DIAGNOSTIC PROCEDURES

WARNING: TO AVOID DEPLOYMENT WHEN TROUBLESHOOTING THE SRS, DO NOT USE ELECTRICAL TEST EQUIPMENT SUCH AS A BATTERY-POWERED OR AC-POWERED VOLTMETER, OHMMETR,ETC. ,OR ANY TYPE OF ELECTRICAL EQUIPMENT OTHER THAN THAT SPECIFIED IN THIS MANUAL. DO NOT USE A NON-POWERED PROBE TYPE TESTER. INSTRUCTIONS IN THIS MANUAL MUST BE FOLLOWED CAREFULLY, OTHERWISE PERSONAL INJURY MAY RESULT.

The diagnostic procedures used in this section are designed to aid in finding and repairing SRS problems. Outlined below are the steps to find and repair SRS problems quickly and effectively. Failure to carefully follow these procedures may result in extended diagnostic time, incorrect diagnosis and incorrect parts replacement.

1. Perform the "SRS Diagnostic System Check". The "SRS Diagnostic System Check" should always be the starting point of any SRS diagnostics. The "SRS Diagnostic System Check" checks for proper "AIR BAG" indicator operation and checks for SRS trouble codes using both "Flash Code" and "Scan Tool" Methods.

2. Refer to the proper diagnostic chart as directed by the "SRS Diagnostic System Check". The "SRS Diagnostic System Check" will lead you to the correct chart to diagnose any SRS problems. Bypassing these procedures may result in extended diagnostic time, incorrect diagnosis and incorrect parts replacement.

3. Repeat the "SRS Diagnostic System Check" after any repair or diagnostic procedures have been performed.Performing the "SRS Diagnostic System Check" after all repair or diagnostic procedures will assure that the repair has been made correctly and that no other conditions exist.

DIAGNOSTIC CODES

The Diagnostic Energy Reserve Module (DERM) maintains a history record of all diagnostic codes that have been detected since the SRS codes were last cleared during service.

1. Current Codes – Faults that are presently detected this ignition cycle. Active and Cycle codes are stored in RAM (Random Access Memory).

2. History Codes – All faults detected since the last time the history fault memory was cleared. History codes are stored in EEPROM (Electrically Erasable Programmable Read Only Memory)

HOW TO READ TROUBLE CODES

All codes (Active cycle and history) can be read (or cleared) by using a Scan Tool (Portable Diagnostic Tool [PDT]) or equivalent. If a PDT is not available, have the vehicle serviced by a Saturn Dealer.

HOW TO CLEAR TROUBLE CODES

Trouble codes can only be cleared by using a Scan Tool. If a "Scan Tool" is not available, then inform the owner of the stored codes and suggest that the codes are cleared upon the next visit to a ISUZU dealership.

SCAN TOOL DIAGNOSTICS

A Scan Tool can be used to read current and history codes and to clear all history codes after a repair is complete. The scan tool must be updated to communicate with the SRS through a replaceable cartridge or a manufacturer's update before it can be used for SRS diagnostics. To use the scan tool, connect it to the ALDL connector and turn the ignition switch "ON". Then follow the manufacturer's directions for communication with the SRS. The scan tool reads serial data from the DERM "Serial Data" output (terminal A11) to the ALDL connector (terminal M) Via ISUZU Convertible Connector (terminal 2).

BASIC KNOWLEDGE REQUIRED

Before using this section of the Service Manual, there is some basic knowledge which will be required. Without this knowledge, you will have trouble using the diagnostic procedures in this section. Use care to prevent harm or unwanted deployment. Read all cautions in the service manual and on warning labels attached to SRS components.

BASIC ELECTRICAL CIRCUITS

You should understand the basic theory of electricity including series and parallel circuits, and understand the voltage drops across series resistors. You should know the meaning of voltage (volts), current (amps), and resistance (ohms). You should understand what happens in a circuit with an open or a shorted wire. You should be able to read and understand a wiring diagram.

"FLASH CODE" DIAGNOSTICS

"Flash Code" diagnostics are not implemented for SRS diagnostic on TROOPER(UX)Vehicles.

SYSTEM SCHEMATIC

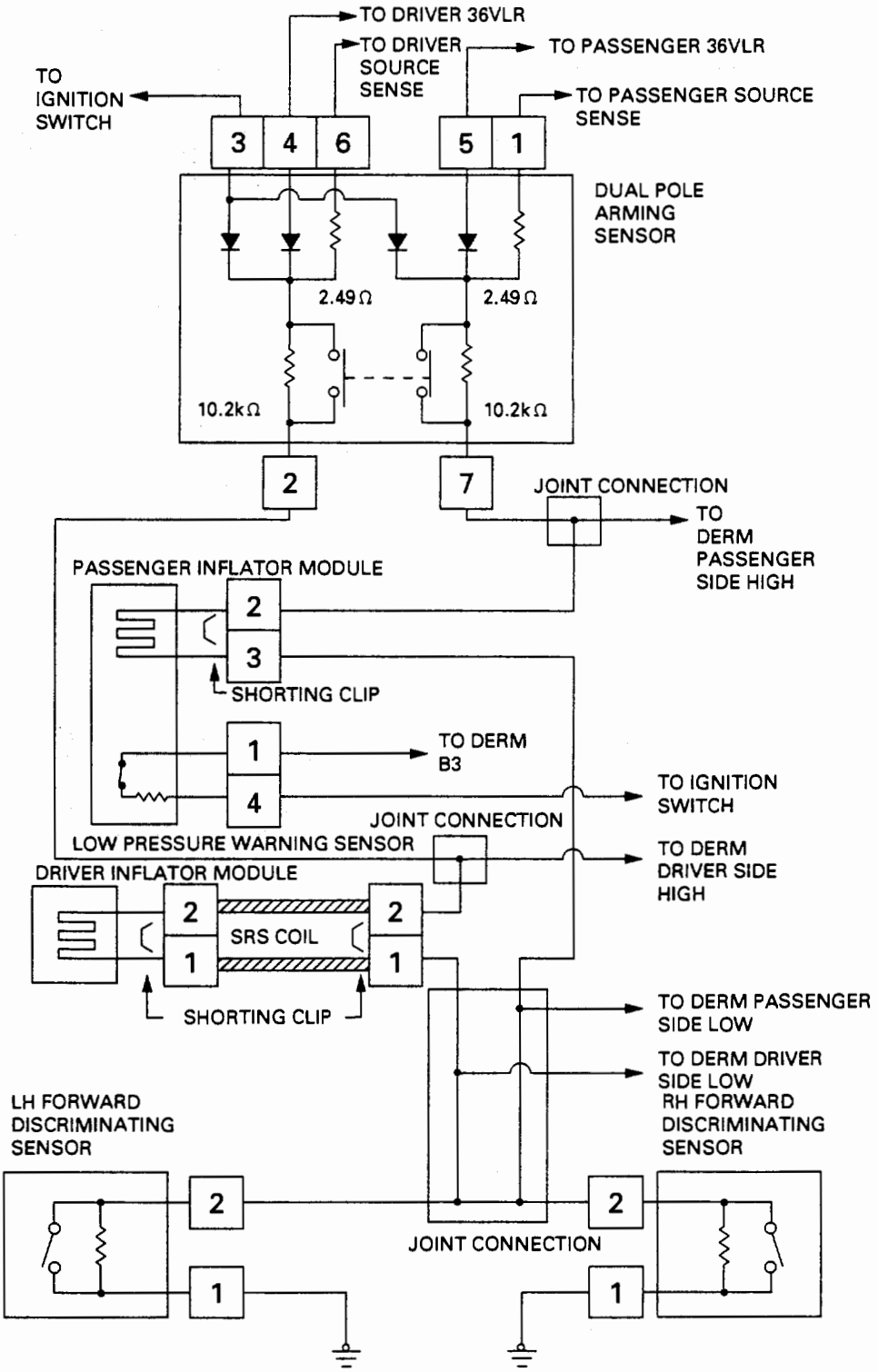

SRS DIAGNOSTIC SYSTEM CHECK

WARNING: TO AVOID DEPLOYMENT WHEN TROUBLESHOOTING THE SRS, DO NOT USE ELECTRICAL TEST EQUIPMENT SUCH AS A BATTERY-POWERED OR AC-POWERED VOLTMETER, OHMMETER, ETC., OR ANY TYPE OF ELECTRICAL EQUIPMENT OTHER THAN THAT SPECIFIED IN THIS MANUAL. DO NOT USE A NON-POWERED PROBE TYPE TESTER. INSTRUCTIONS IN THIS MANUAL MUST BE FOLLOWED CAREFULLY, OTHERWISE PERSONAL INJURY MAY RESULT.

The diagnostic procedures used in this section are designed to find and repair SRS malfunctions. To get the best results, it is important to use the diagnostic charts and follow the sequence listed below:

A. PERFORM THE "SRS DIAGNOSTIC SYSTEM CHECK."

The "SRS Diagnostic System Check" must be the starting point of any SRS diagnostics. The "SRS Diagnostic System Check" checks for proper "AIR BAG" warning lamp operation, the ability of the DERM to communicate through the "Serial Data" line and whether SRS diagnostic trouble codes exist.

B. REFER TO THE PROPER DIAGNOSTIC CHART AS DIRECTED BY THE SRS DIAGNOSTIC SYSTEM CHECK."

The "SRS Diagnostic System Check" will lead you to the correct chart to diagnose any SRS malfunctions. Bypassing these procedures may result in extended diagnostic time, incorrect diagnosis and incorrect parts replacement.

C. REPEAT THE "SRS DIAGNOSTIC SYSTEM CHECK" AFTER ANY REPAIR OR DIAGNOSTIC PROCEDURES HAVE BEEN PERFORMED.

Performing the "SRS Diagnostic System Check" after all repair or diagnostic procedures will ensure that the repair has been made correctly and that no other malfunctions exist.

CIRCUIT DESCRIPTION

When the ignition switch is first turned "ON,""Ignition 1" voltage is applied from the "C-22·C-23" fuse to the DERM at the "Ignition 1" input terminals "A9" and "A10" and from the "C-21" fuse to the DERM at the "Redundant Indicator Ignition 1" input terminal "B2". The DERM responds by flashing the "AIR BAG" warning lamp seven times while performing tests on the SRS.When the engine is being cranked, "Starter" voltage is applied from the "C-1" fuse to the DERM at the "Crank" input terminal "B10".The DERM responds by grounding the "SRS Indicator" output terminal "B1" until "Starter" voltage is removed from the "Crank " input. This results in the "AIR BAG" warning lamp being "ON" steady during cranking.After cranking, the DERM will flash the "AIR BAG" warning lamp six times and perform tests on the SRS.

NOTES ON SYSTEM CHECK CHART

1. The "AIR BAG" warning lamp should flash seven times after ignition is first turned "ON."
2. The "AIR BAG" warning lamp should remain "ON" steady during cranking.
3. When the "AIR BAG" warning lamp flashes four times during "Bulb Check" this indicates a malfunction in the redundant lamp driver circuitry. These malfunctions are diagnosed by DTC 62 chart.
4. After cranking, the "AIR BAG" warning lamp should flash six times then go "OFF."
5. Improper operation of the "AIR BAG" warning lamp is indicated. This test differentiates a warning lamp stays "ON" condition from a warning lamp does not come "ON" condition.
6. This test checks for the proper operation of the "Serial Data" line. This test will also determine whether history diagnostic trouble codes are stored and, if so, identify them.
7. This test checks for proper operation of the "Serial Data" line. This test will also identify the stored diagnostic trouble codes and whether they are current or history.

DIAGNOSTIC AIDS

The order in which diagnostic trouble codes are diagnosed is very important. Failure to diagnose the diagnostic trouble codes in the order specified may result in extended diagnostic time, incorrect diagnosis and incorrect parts replacement.

SRS DIAGNOSTIC SYSTEM CHECK

STEP	ACTION	YES	NO
1	NOTE "AIR BAG" WARNING LAMP AS IGNITION SWITCH IS TURNED "ON." DOES WARNING LAMP FLASH 7 TIMES?	GO TO STEP2	GO TO STEP3
2	NOTE "AIR BAG" WARNING LAMP AS ENGINE IS STARTED. DOES WARNING LAMP COME "ON" STEADY DURING CRANKING?	GO TO STEP4	GO TO CHART D.
3	DOES WARNING LAMP FLASH 4 TIMES?	GO TO DTC 62.	GO TO STEP 5.
4	NOTE "AIR BAG" WARNING LAMP AFTER STARTING. DOES WARNING LAMP FLASH 6 TIMES THEN GO "OFF"?	GO TO STEP6	GO TO STEP7
5	DOES WARNING LAMP COME "ON" STEADY?	GO TO CHART B.	GO TO CHART C.
6	IGNITION SWITCH "OFF." CONNECT SCAN TOOL TO DATA LINK CONNECTOR, FOLLOW DIRECTIONS AS GIVEN IN THE SCAN TOOL INSTRUCTION MANUAL. IGNITION SWITCH "ON." REQUEST SRS DIAGNOSTIC TROUBLE CODE DISPLAY, RECORD ALL HISTORY DIAGNOSTIC TROUBLE CODES, SPECIFYING AS SUCH, ON REPAIR ORDER.	IF NO SRS DIAGNOSTIC TROUBLE CODES ARE DISPLAYED. GOTO STEP 8. IF HISTORY DIAGNOSTIC TROUBLE CODES ARE DISPLAYED. GOTO STEP 9.	
7	IGNITION SWITCH "OFF." CONNECT SCAN TOOL TO DATA LINK CONNECTOR, FOLLOW DIRECTIONS AS GIVEN IN THE SCAN TOOL INSTRUCTION MANUAL. IGNITION SWITCH "ON." REQUEST SRS DIAGNOSTIC TROUBLE CODE DISPLAY, RECORD ALL DIAGNOSTIC TROUBLE CODES SPECIFYING AS CURRENT OR HISTORY ON REPAIR ORDER.	IF DIAGNOSTIC TROUBLE CODES ARE DISPLAYED. GOTO STEP 10.	
8	SRS IS FUNCTIONAL AND FREE OF MALFUNCTIONS. NO FURTHER DIAGNOSIS IS REQUIRED.		
9	IGNITION SWITCH "OFF". WHEN DTC 83 IS SET, GO TO DTC 83 CHART. WHEN DTC 84 IS SET, GO TO DTC 84 CHART. FOR ALL OTHER HISTORY DIAGNOSTIC TROUBLE CODES, REFER TO "DIAGNOSTIC AIDS" FOR THAT SPECIFIC DIAGNOSTIC TROUBLE CODE. A HISTORY DTC INDICATES THE MALFUNCTION HAS BEEN REPAIRED OR IS INTERMITTENT.		
10	DIAGNOSTIC TROUBLE CODES ARE DISPLAYED. IGNITION SWITCH "OFF." WHEN DTC 51 IS SET, GO TO DTC 51 CHART. DIAGNOSE REMAINING CURRENT DIAGNOSTIC TROUBLE CODES FROM LOWEST TO HIGHEST. WHEN ONLY HISTORY DIAGNOSTIC TROUBLE CODES EXIST, REFER TO "DIAGNOSTIC AIDS" FOR THAT SPECIFIC DIAGNOSTIC TROUBLE CODE. A HISTORY DTC INDICATES THE MALFUNCTION HAS BEEN REPAIRED OR IS INTERMITTENT.		

TABLE A

DERM INTEGRITY CHECK

CIRCUIT DESCRIPTION

When the DERM recognizes "Ignition 1" voltage, applied to terminals "A9" and "A10", is in the normal operating voltage range, the "AIR BAG" warning lamp is flashed 7 times to verify operation. At this time the DERM performs "Turn–ON" tests followed by "Continuous Monitoring" tests. When no malfunctions are detected the DERM proceeds to the "Initiator Assembly Resistance Test." When a malfunction is detected the DERM sets a current diagnostic trouble code and illuminates the "AIR BAG" warning lamp. The DERM will clear current diagnostic trouble codes and move them to a history file when the malfunction is no longer detected and/or the ignition switch is cycled, except for DTC 51. DTC 51 can only be cleared using a scan tool "Clear Codes" command.

CHART TEST DESCRIPTION

Number(s) below refer to step number(s) on the diagnostic table.

1. This test confirms a current malfunction. If no current malfunction is occurring(history DTC set) the "Diagnostic Aids" for the appropriate diagnostic trouble code should be referenced. The DERM should not be replaced for a history diagnostic trouble code.
2. This test checks for a malfunction introduced into the SRS during the diagnostic process. It is extremely unlikely that a malfunctioning DERM would cause a new malfunction to occur during the diagnostic process.
3. When all circuitry outside the DERM has been found to operate properly, as indicated by the appropriate diagnostic chart, then and only then should the DERM be replaced.

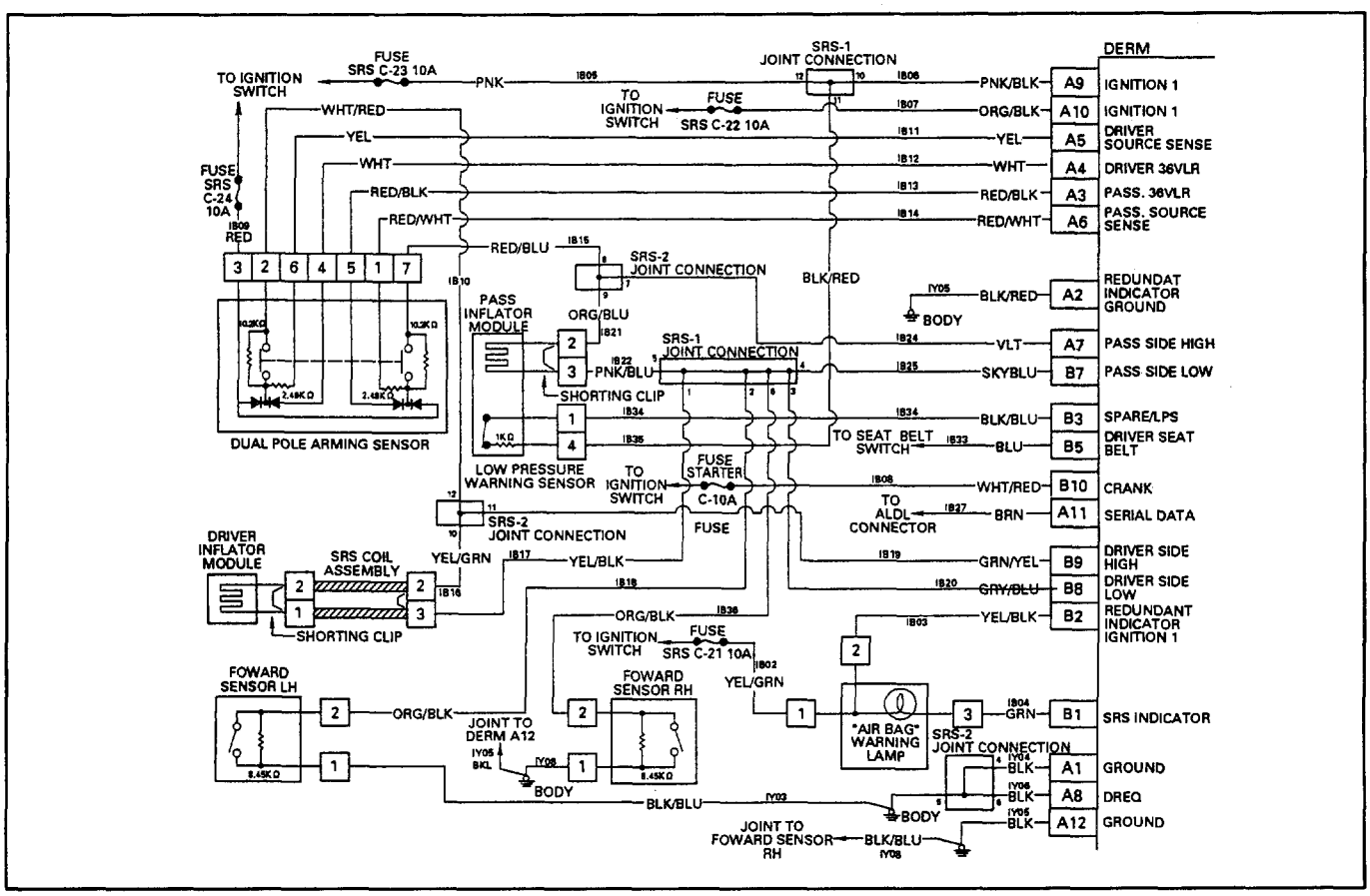

TABLE A

DERM INTEGRITY CHECK

STEP	ACTION	YES	NO
1	THIS CHART ASSUMES THAT THE "SRS DIAGNOSTIC SYSTEM CHECK" AND EITHER A SYMPTOM CHART OR A DIAGNOSTIC TROUBLE CODE CHART DIAGNOSIS HAVE BEEN PERFORMED. WHEN ALL CIRCUITRY OUTSIDE THE DERM HAS BEEN FOUND TO OPERATE PROPERLY, AS INDICATED BY THE APPROPRIATE DIAGNOSTIC CHART, AND THE SYMPTOM OR DTC REMAINS CURRENT, THE FOLLOWING. DIAGNOSTIC PROCEDURES MUST BE PERFORMED TO VERIFY THE NEED FOR DERM REPLACEMENT. IGNITION SWITCH "OFF." RECONNECT ALL SRS COMPONENTS, ENSURE ALL COMPONENTS ARE PROPERLY MOUNTED. ENSURE THE IGNITION SWITCH HAS BEEN "OFF" FOR AT LEAST TWO MINUTES. NOTE"AIR BAG" WARNING LAMP AS IGNITION SWITCH IS TURNED "ON." DOES WARNING LAMP FLASH 7 TIMES THEN GO "OFF"?	THE SYMPTOM OR DTC IS NO LONGER OCCURRING. CLEAR SRS DIAGNOSTIC TROUBLE CODES. REPEAT THE "SRS DIAGNOSTIC SYSTEM CHECK."	GO TO STEP2.
2	USING A SCAN TOOL REQUEST DIAGNOSTIC TROUBLE CODE DISPLAY. IS THE SAME SYMPTOM OR DTC OCCURRING AS WAS WHEN THE SRS DIAGNOSTIC SYSTEM CHECK "WAS FIRST PERFORMED"	GO TO STEP3.	IGNITION SWITCH "OFF." GO TO THE APPROPRIATE CHART FOR THE INDICATED MALFUNCTION.
3	CLEAR SRS DIAGNOSTIC TROUBLE CODES. "IGNITION SWITCH "OFF" FOR AT LEAST TWO MINUTES. NOTE "AIR BAG" WARNING LAMP AS IGNITION SWITCH IS TURNED "ON." DOES WARNING LAMP FLASH 7 TIMES THEN GO "OFF"?	SRS IS FUNCTIONAL AND FREE OF MALFUNCTIONS. NO FURTHER DIAGNOSIS IS REQUIRED.	IGNITION SWITCH "OFF." GO TO STEP 4
4	REPLACE DERM. RECONNECT ALL SRS COMPONENTS, ENSURE ALL COMPONENTS ARE PROPERLY MOUNTED. REPEAT THE "SRS DIAGNOSTIC SYSTEM CHECK.	GO TO THE "SRS DIAGNOSTIC SYSTEM CHECK"	

TABLE B

"AIR BAG" WARNING LAMP COMES "ON" STEADY

CIRCUIT DESCRIPTION

When the ignition switch is first turned "ON," "Ignition 1" voltage is applied from the "C–21" fuse to "Redundant Indicator Ignition 1," terminal "B2", and to the "AIR BAG" warning lamp which is connected to "SRS Indicator," terminal "B1". The "C–22·C–23" fuses apply system voltage to the "Ignition 1" inputs, terminals "A9" and "A10". The DERM responds by flashing the "AIR BAG" warning lamp 7 times. If "Starter" is outside of the normal operating voltage range, the "AIR BAG" warning lamp will come "ON" solid with no DTCs set.When the engine is being cranked, "Ignition 1" voltage is applied from the "C–1" fuse to the DERM at the "Crank" input. The DERM responds by grounding the "SRS" Indicator" output until "Starter" voltage is removed from the "Crank" input. This results in the "AIR BAG" warning lamp being "ON" during cranking.After cranking, the DERM will flash the "AIR BAG" warning lamp 6 times.

CHART TEST DESCRIPTION

Number(s) below refer to step number(s) on the diagnostic table.

1. An open "C–22·C–23" fuses would cause the "AIR BAG" warning lamp to come "ON" steady.
2. A disconnected DERM harness connector will cause the warning lamp to come "ON" steady via the shorting clip from terminal "A1" to terminal "B1".
3. This test checks whether the short to ground caused the "C–1" fuse to open.
4. This test checks for an open in the ground circuitry to the DERM.
5. This test determines whether the short to ground is due to a malfunctioning dual pole arming sensor or a short in the wiring.
6. This test checks for an open in the "Ignition 1" circuitry to the DERM.
7. This test checks for a short from the "SRS Indicator" circuit to ground.
8. This test checks for a short from the "Crank" input circuit to B+.

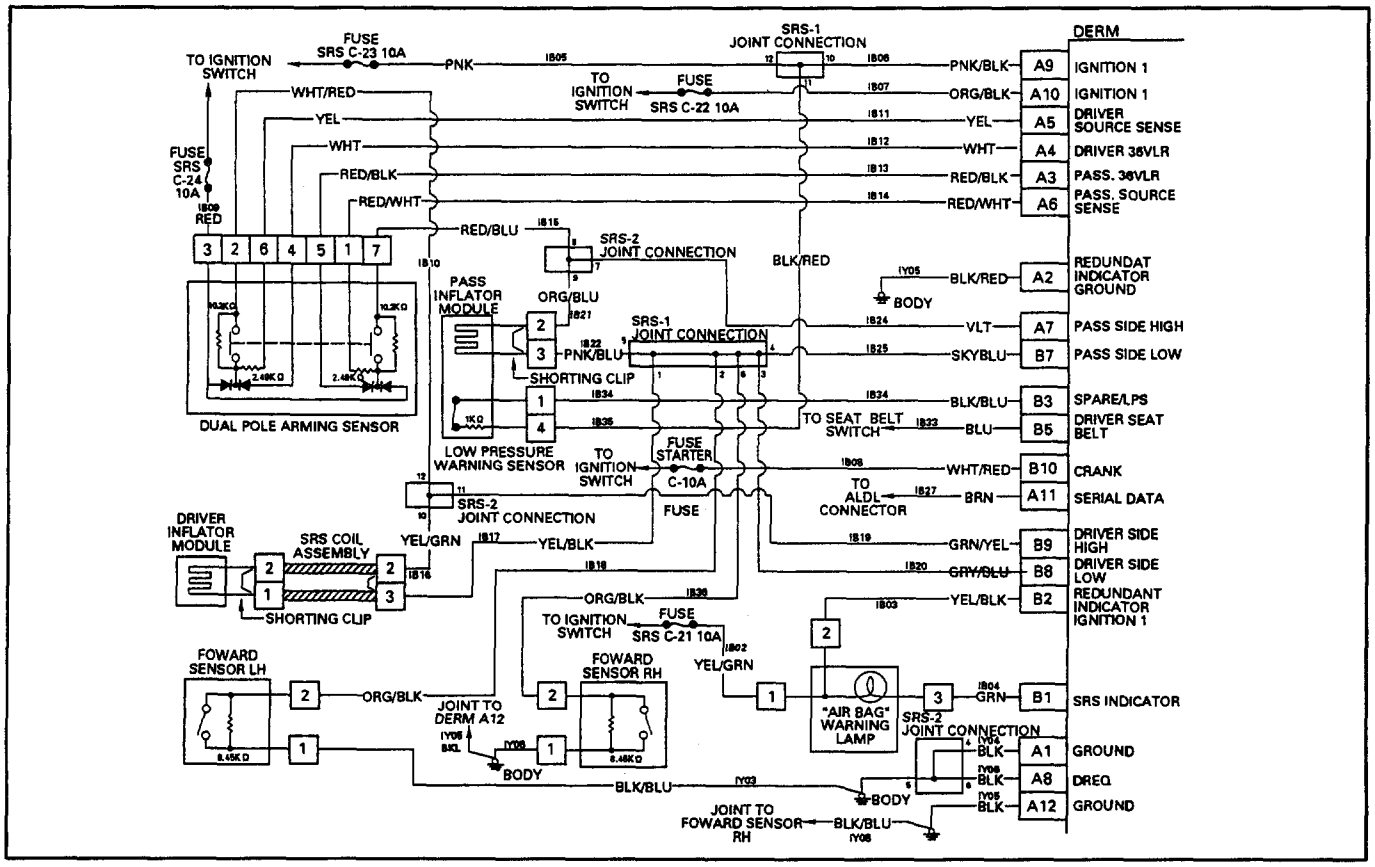

TABLE B

"AIR BAG" WARNING LAMP COMES "ON" STEADY

STEP	ACTION	YES	NO
1	WHEN MEASUREMENTS ARE REQUESTED IN THIS CHART USE J–39200 DVM WITH CORRECT TERMINAL ADAPTER FROM J–35616–A. WHEN A CHECK FOR PROPER CONNECTION IS REQUESTED. IGNITION SWITCH "OFF." REMOVE AND INSPECT "C–22·C–23" FUSE. IS FUSE GOOD?	Go to Step2.	Go to Step3.
2	INSPECT DERM HARNESS CONNECTOR CONNECTION TO DERM. IS IT SECURELY CONNECTED TO THE DERM?	Go to Step4.	PROPERLY CONNECT DERM HARNESS CONNECTOR TO DERM. INSTALL C–22·C–23 FUSE. Go to Step11.
3	REPLACE C–22·C–23 FUSE.IGNITION SWITCH "ON," WAIT 10 SECONDS, THEN IGNITION SWITCH "OFF." REMOVE AND INSPECT C–22·C–23 FUSE. IS FUSE GOOD?	INSTALL C–22·C–23 FUSE. Go to Step11.	Go to Step5.
4	DISCONNECT DERM.CHECK FOR PROPER CONNECTION TO DERM AT TERMINALS "A1", "A9", "A10" AND "A12". IF OK, THEN MEASURE RESISTANCE FROM DERM HARNESS CONNECTOR TERMINAL "A1" TO "A2". IS RESISTANCE 5.0Ω OR LESS?	Go to Step6	REPLACE /SRS HARNESS. RECONNECT DERM. INSTALL C–22·C–23 FUSE. Go to Step11.
5	DISCONNECT DUAL POLE ARMING SENSOR. REPLACE C–22·C–23 FUSE. IGNITION SWITCH "ON," WAIT 10 SECONDS, THEN IGNITION SWITCH "OFF.. REMOVE AND INSPECT C–22·C–23 FUSE. IS FUSE GOOD?	REPLACE DUAL POLE ARMING SENSOR. INSTALL C–22·C–23 FUSE. Go to Step11.	REPLACE SRS HARNESS. RECONNECT DUAL POLE ARMING SENSOR. REPLACE C–22·C–23 FUSE. Go to Step11.
6	INSTALL C–22·C–23 FUSE. IGNITION SWITCH "ON." MEASURE VOLTAGE FROM DERM HARNESS CONNECTOR TERMINAL "A1"(GROUND) TO TERMINAL "A9". IS VOLTAGE 1 VOLT OR LESS?	IGNITION SWITCH "OFF." REPLACE SRS HARNESS. RECONNECT DERM. INSTALL C–22·C–23 FUSE. Go to Step11.	Go to Step7.
7	INSTALL C–22·C–23 FUSE.DISCONNECT DRIVER AND PASSENGER INFLATOR MODULES, YELLOW 2–WAY OR 4–WAY CONNECTORS LOCATED NEAR THE BASE OF STEERING COLUMN AND BEHIND THE I/P COMPARTMENT DOOR ASSEMBLY. CONNECT DERM HARNESS CONNECTOR TO J41433 SRS DRIVER/PASSENGER LOAD TOOL. IGNITION SWITCH "ON." DOES "AIR BAG" WARNING LAMP COME "ON"?	Go to Step11.	Go to Step8.
8	IGNITION SWITCH "OFF." DISCONNECT SRS DRIVER/PASSENGER LOAD TOOL. IGNITION SWITCH "ON." MEASURE VOLTAGE ON DERM HARNESS CONNECTOR FROM TERMINAL "B10" TO TERMINAL "A1"(GROUND). IS VOLTAGE 1 VOLT OR LESS?	IGNITION SWITCH "OFF.. Go to CHART A.	Go to Step10.
9	IGNITION SWITCH "OFF." DISCONNECT SRS DRIVER/PASSENGER LOAD TOOL. REPLACE SRS HARNESS.	Go to Step11.	
10	IGNITION SWITCH "OFF." REPLACE SRS HARNESS.	Go to Step11.	
11	RECONNECT ALL SRS COMPONENTS, ENSURE ALL COMPONENTS ARE PROPERLY MOUNTED. REPEAT THE "SRS DIAGNOSTIC SYSTEM CHECK."	GO TO THE "SRS DIAGNOSTIC SYSTEM CHECK"	

TABLE C

"AIR BAG" WARNING LAMP DOES NOT COME "ON"

CIRCUIT DESCRIPTION

When the ignition switch is first turned "ON," "Ignition 1" voltage is applied from the "C–21" fuse to "Redundant Indicator Ignition 1," terminal "B2", and to the "AIR BAG" warning lamp which is connected to "SRS Indicator," terminal "B1". The "C–22·C–23" fuses apply system voltage to the "Ignition 1" inputs, terminals "A9" and"A10". The DERM responds by flashing the "AIR BAG" warning lamp seven times.When the engine is being cranked, "Starter" voltage is applied from the "C–1" fuse to the DERM at the "Crank" input. The DERM responds by grounding the "SRS Indicator" output until "Starter" voltage is removed from the "Crank" input. This results in the "ARE BAG" warning lamp being "ON" during cranking.After cranking, the DERM will flash the "AIR BAG" warning lamp six times.

CHART TEST DESCRIPTION

Number(s) below refer to step number(s) on the diagnostic table.

1. This test confirms the integrity of the "Redundant Indicator Ignition 1" circuit.
2. This test checks for an open in the "SRS Indicator" circuit, instrument panel cluster circuitry, and "AIR BAG" warning lamp bulb.
3. This test checks whether the open is due to a bad bulb.
4. This test determines whether the malfunction is a short from the "SRS Indicator" circuit to B+.
5. This test determines whether the malfunction is an open in the "SRS Indicator" circuit or an open in the instrument panel cluster.

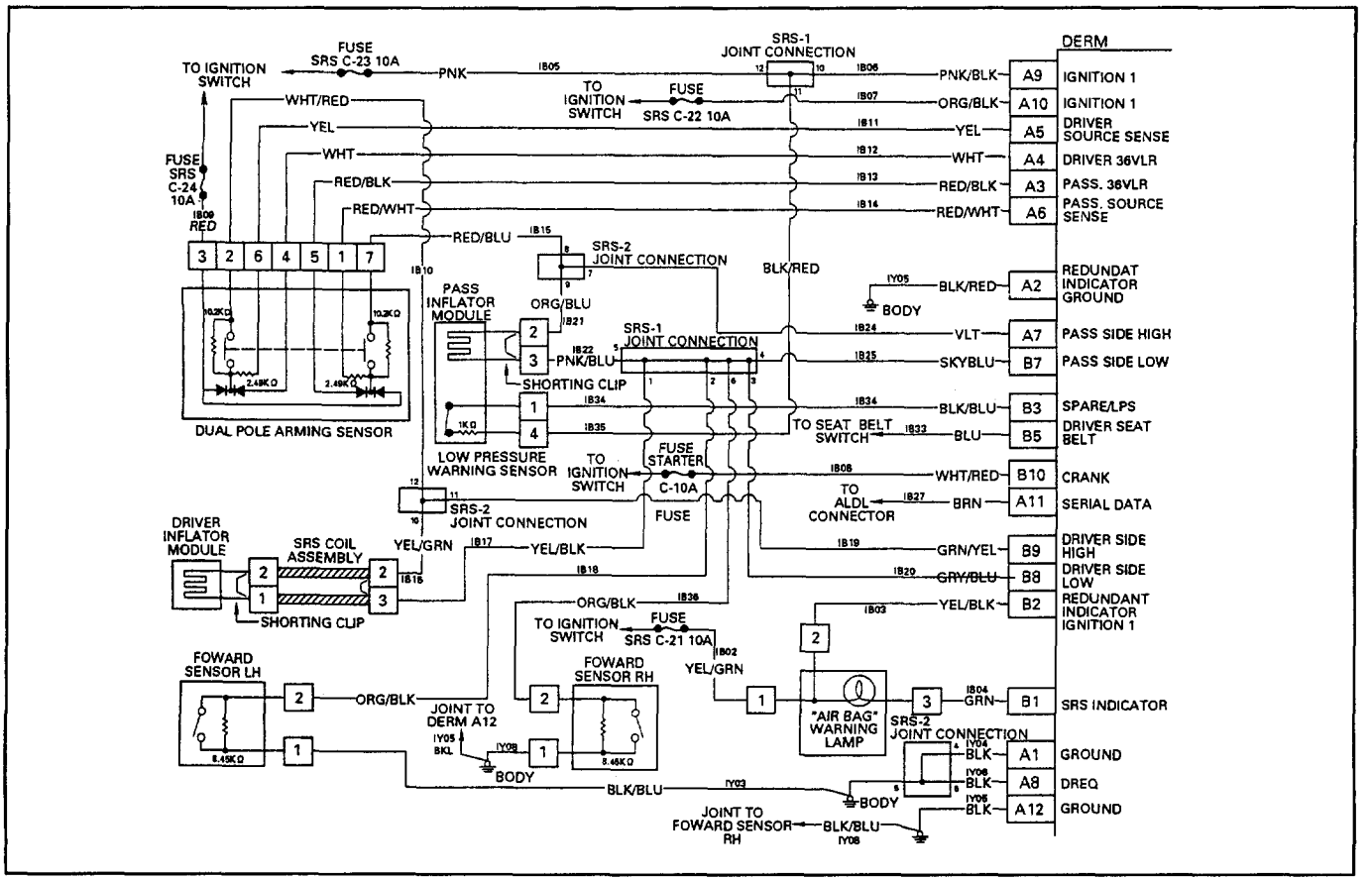

TABLE C

"AIR BAG" WARNING LAMP DOES NOT COME "ON"

STEP	ACTION	YES	NO
1	WHEN MEASUREMENTS ARE REQUESTED IN THIS CHART USE J–39200 DVM WITH CORRECT TERMINAL ADAPTER FROM J–35616–A. IGNITION SWITCH "OFF." DISCONNECT DERM. CHECK FOR PROPER CONNECTION TO DERM AT TERMINAL "B1". IF OK, THEN IGNITION SWITCH "ON." MEASURE VOLTAGE ON DERM HARNESS CONNECTOR FROM TERMINAL "B2" TO TERMINAL "A12"(GROUND). IS VOLTAGE 1 VOLT OR LESS?	IGNITION SWITCH "OFF." REPLACE SRS HARNESS. REPEAT STEP 1.	GO TO STEP2.
2	IGNITION SWITCH "OFF." MEASURE RESISTANCE ON DERM HARNESS CONNECTOR FROM TERMINAL "B2" TO TERMINAL "B1". IS RESISTANCE 5.0Ω TO 25.0Ω?	GO TO STEP4.	GO TO STEP3.
3	REMOVE INSTRUMENT CLUSTER. CHECK FOR PROPER CONNECTION TO INSTRUMENT CLUSTER AT CONNECTOR TERMINAL "3". IF OK, THEN REMOVE AND INSPECT "AIR BAG" BULB. IS BULB GOOD?	GO TO STEP5.	GO TO STEP6.
4	DISCONNECT INSTRUMENT CLUSTER. CONNECT DERM HARNESS CONNECTOR TO J41433 SRS DRIVER/PASSENGER LOAD TOOL DERM CONNECTOR. IGNITION SWITCH "ON." MEASURE VOLTAGE FROM INSTRUMENT CLUSTER HARNESS CONNECTOR TERMINAL "3" TO GROUND. IS VOLTAGE 1 VOLT OR LESS?	INSTALL INSTRUMENT CLUSTER. GO TO CHART A.	REPLACE SRS HARNESS. INSTALL INSTRUMENT CLUSTER. GO TO STEP 9.
5	INSTALL BULB. MEASURE RESISTANCE FROM INSTRUMENT CLUSTER HARNESS CONNECTOR TERMINAL TO DERM HARNESS CONNECTOR TERMINAL "B1". IS RESISTANCE 5.0Ω OR LESS?	GO TO STEP8.	GO TO STEP7.
6	REPLACE BULB. INSTALL INSTRUMENT CLUSTER.	GO TO STEP 9.	
7	REPLACE SRS HARNESS. INSTALL INSTRUMENT CLUSTER.	GO TO STEP 9.	
8	SERVICE INSTRUMENT CLUSTER. INSTALL INSTRUMENT CLUSTER.	GO TO STEP 9.	
9	RECONNECT ALL SRS COMPONENTS, ENSURE ALL COMPONENTS ARE PROPERLY MOUNTED. REPEAT THE "SRS DIAGNOSTIC SYSTEM CHECK."	GO TO THE "SRS DIAGNOSTIC SYSTEM CHECK"	

TABLE D

"AIR BAG" WARNING LAMP DOES NOT COME "ON" STEADY DURING CRANK

CIRCUIT DESCRIPTION

When the ignition switch is first turned "ON," "Ignition 1" voltage is applied from the "C–21" fuse to "Redundant Indicator Ignition 1," terminal "B2", and to the "AIR BAG" warning lamp which is connected to "SRS Indicator," terminal "B1". The "C–22·C–23" fuses applies system voltage to the "Ignition 1" inputs, terminals "A9" and"A10". The DERM responds by flashing the "AIR BAG" warning lamp seven times.When the engine is being cranked, "Starter" voltage is applied from the "C–1" fuse to the DERM at the "Crank" input. The DERM responds by grounding the "SRS Indicator" output until "Starter" voltage is removed from the "Crank" input. This results in the "AIR BAG" warning lamp being "ON" during cranking.After cranking, the DERM will flash the "AIR BAG" warning lamp six times.

CHART TEST DESCRIPTION

Number(s) below refer to step number(s) on the diagnostic table.

1. This test checks for a proper signal to the "Crank" input during cranking.
2. This test determines whether the lack of a proper crank signal is due to an open "Crank" input circuit or an open power feed to the "C–1" fuse.
3. This test checks for an open in the Body Harness.
4. This test checks for an open in the SRS harness.

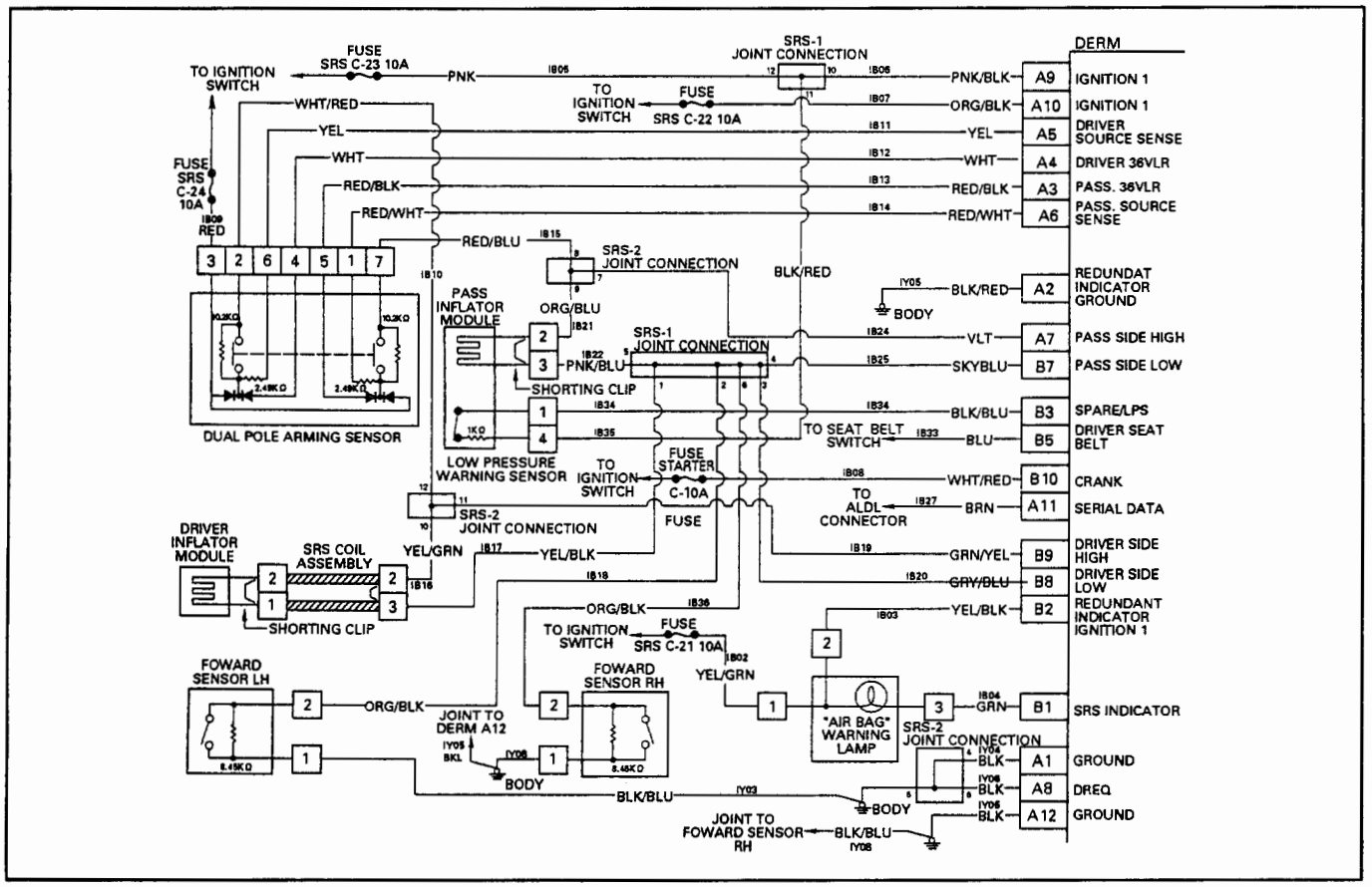

TABLE D

"AIR BAG" WARNING LAMP DOES NOT COME "ON" STEADY DURING CRANK

STEP	ACTION	YES	NO
1	WHEN MEASUREMENTS ARE REQUESTED IN THIS CHART USE J–39200 DVM WITH CORRECT TERMINAL ADAPTER FROM J–35616–A. INSTALL C–1 FUSE. DISCONNECT DRIVER AND PASSENGER INFLATOR MODULES, YELLOW 2–WAY OR 4–WAY CONNECTORS LOCATED NEAR THE BASE OF THE STEERING COLUMN AND BEHIND THE I/P COMPARTMENT DOOR ASSEMBLY. DISCONNECT DERM. MEASURE VOLTAGE ON DERM HARNESS CONNECTOR FROM TERMINAL "B10" TO TERMINAL "A1"(GROUND) WHILE STARTING ENGINE. IS VOLTAGE GREATER THAN 7.25 VOLTS?	IGNITION SWITCH "OFF." CHECK FOR PROPER CONNECTION AT DERM HARNESS CONNECTOR TERMINAL "B10". IF OK, THEN GO TO CHART A.	GO TO STEP2.
2	IGNITION SWITCH "OFF." REMOVE C–1 FUSE. MEASURE RESISTANCE FROM EACH TERMINAL OF THE C–1 FUSE FUSE HOLDER TO DERM HARNESS CONNECTOR TERMINAL "B10". IS EITHER MEASUREMENT 5.0Ω OR LESS?	GO TO STEP5.	GO TO STEP3.
3	DISCONNECT BODY HARNESS CONNECTOR. CHECK FOR PROPER CONNECTION AT BODY HARNESS CONNECTOR TERMINAL "4". IF OK, THEN MEASURE RESISTANCE FROM EACH TERMINAL OF THE C–1 FUSE FUSE HOLDER TO BODY HARNESS CONNECTOR TERMINAL "4" IS EITHER MEASUREMENT 5.0Ω OR LESS?	GO TO STEP4.	GO TO STEP6.
4	MEASURE RESISTANCE FROM BODY HARNESS CONNECTOR TERMINAL "4" TO DERM HARNESS CONNECTOR TERMINAL "B10". IS EITHER MEASUREMENT 5.0Ω OR LESS?	GO TO STEP7.	REPLACE SRS HARNESS GO TO STEP7.
5	REPAIR OPEN IN POWER FEED TO C–1 FUSE, REFER TO SECTION 8. INSTALL C–1 FUSE.	GO TO STEP7.	
6	REPLACE BODY HARNESS.	GO TO STEP7.	
7	RECONNECT ALL SRS COMPONENTS, ENSURE ALL COMPONENTS ARE PROPERLY MOUNTED. REPEAT THE "SRS DIAGNOSTIC SYSTEM CHECK."	GO TO THE "SRS DIAGNOSTIC SYSTEM CHECK"	

DTC 14

DUAL POLE ARMING SENSOR DISCONNECTED

CIRCUIT DESCRIPTION

The DERM monitors the voltage at the "Driver Source Sense" terminal "A5", the "Passenger Source Sense" terminal "A6", the "Driver Side High" terminal "B9", the "Passenger Side High" terminal "A7", the "Driver Side Low" terminal "B8" and the "Passenger Side Low" terminal "B7" during the "Continuous Monitoring" tests. When all voltages are simultaneously below a specified value for 500 milliseconds DTC 14 sets.DTC will set when: The voltages at terminals "A5","A6","B9", "A7","B8" and "B7" of the DERM harness connector are simultaneously below a specified value for 500 milliseconds.

ACTION TAKEN

DERM turns "ON" the "AIR BAG" warning lamp and sets diagnostic trouble code.

DTC WILL CLEAR WHEN

The voltage at terminal "A5","A6","B9","A7","B8" and "B7" of the DERM harness connector is above specified value for 500 milliseconds.

DTC CHART TEST DESCRIPTION

Number(s) below refer to step number(s) on the diagnostic chart.

2. This test checks for a situation which prevents a proper connection of the dual pole arming sensor to the wiring harness.

DIAGNOSTIC AIDS

It is highly unlikely that an intermittent condition has set this diagnostic trouble code as this would require a poor connection at terminal "1", "2" and "3" or at terminal "4" , "5" , "6" and "7" of Dual Pole Arming Sensor Connector.

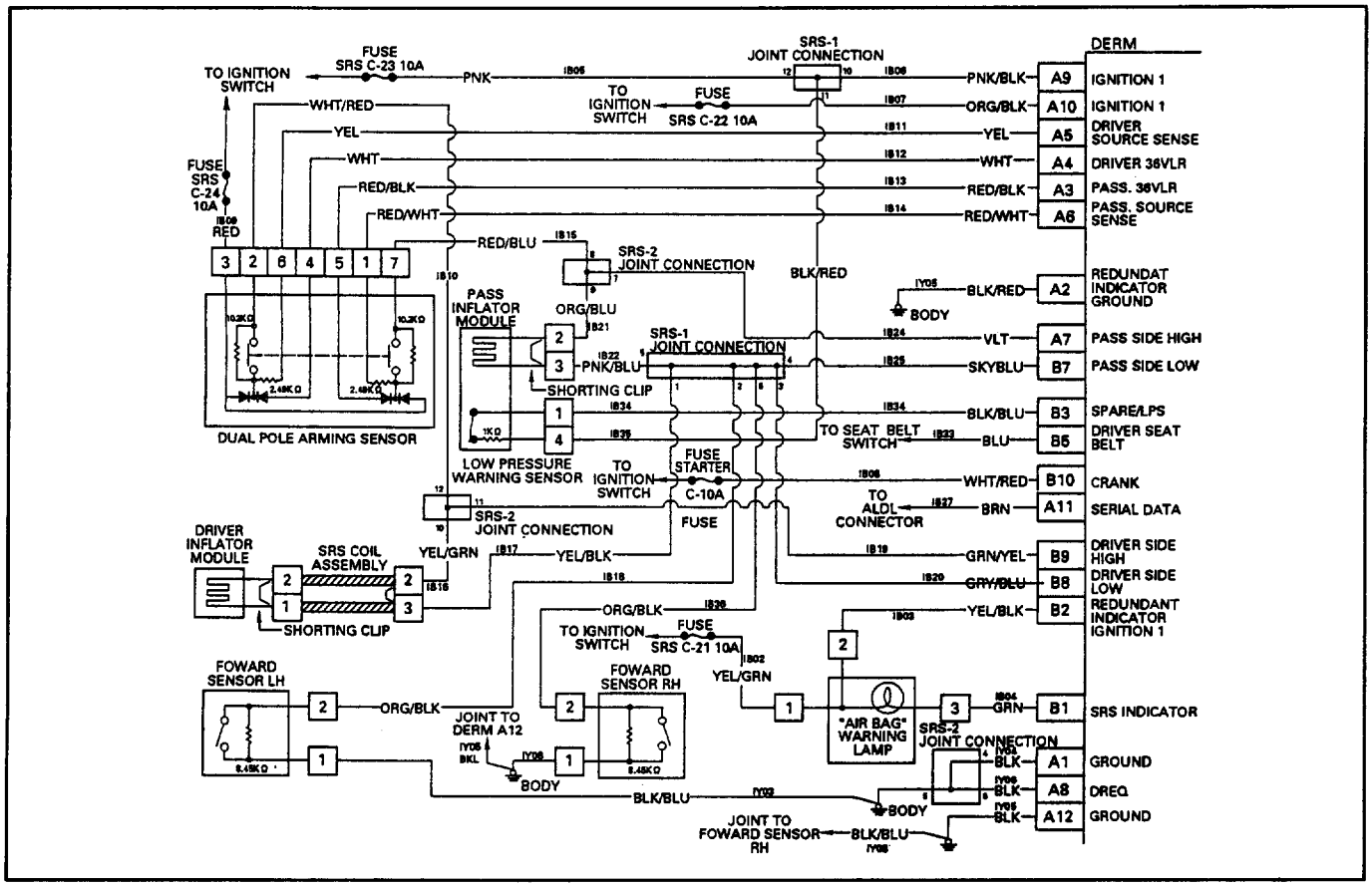

DTC 14

DUAL POLE ARMING SENSOR DISCONNECTED

STEP	ACTION	YES	NO
1	WAS THE "SRS DIAGNOSTIC SYSTEM CHECK" PERFORMED?	GO TO STEP2.	GO TO THE "SRS DIAGNOSTIC SYSTEM CHECK"
2	IGNITION SWITCH "OFF." DISCONNECT DRIVER AND PASSENGER INFLATOR MODULES, YELLOW 2–WAY OR 4–WAY CONNECTORS LOCATED AT THE TOP OF THE STEERING COLUMN AND BEHIND THE I/P COMPARTMENT DOOR ASSEMBLY. DISCONNECT DUAL POLE ARMING SENSOR HARNESS CONNECTOR FROM DUAL POLE ARMING SENSOR AND RECONNECT. IGNITION SWITCH "ON." IS DTC 14 CURRENT?	IGNITION SWITCH "OFF." GO TO CHART A.	IGNITION SWITCH "OFF." GO TO STEP3.
3	RECONNECT ALL SRS COMPONENTS,ENSURE ALL COMPONENTS ARE PROPERLY MOUNTED. CLEAR SRS DIAGNOSTIC TROUBLE CODES. REPEAT THE "SRS DIAGNOSTIC SYSTEM CHECK."	GO TO THE "SRS DIAGNOSTIC SYSTEM CHECK".	

DTC 15

PASSENGER INITIATOR CIRCUIT RESISTANCE HIGH

CIRCUIT DESCRIPTION

During the "Initiator Assembly Resistance Test" the DERM grounds the "Driver Side Low" terminal "B8" and turns "ON" the passenger current source at the "Passenger Side High" terminal "A7". This causes a known amount of current to flow through the passenger initiator circuit. By monitoring the difference between the voltage at the "Passenger Side High" terminal "A7" and the "Passenger Side Low" terminal "B7" the DERM calculates the combined resistance of the passenger inflator module, harness wiring CKTs IB21, IB22 and IB24 and connector terminal contact.

DTC WILL SET WHEN

The combined resistance of the passenger inflator module, harness wiring CKT's IB21, IB22, and IB24 and connector terminal contact is above a specified value. This test is run once each ignition cycle during the "Initiator Assembly Resistance Test" when: 1) No "higher priority faults" are detected during "Turn–ON," 2) No "higher priority faults" are detected during "Continuous Monitoring for one second, 3) No "Crank" signal present, 4) "Ignition 1" voltage is above a specified value.

ACTION TAKEN

DERM turns "ON" the "AIR BAG" warning lamp and sets a diagnostic trouble code.

DTC WILL CLEAR WHEN

The ignition switch is turned "OFF."

DTC CHART TEST DESCRIPTION

Number(s) below refer to step number(s) on the diagnostic chart.

2. This test determines whether the malfunction is in the passenger inflator module circuitry or in the DERM wiring harness circuitry.

3. This test determines whether the malfunction is an open in CKT's IB"21, IB22, IB24.

DIAGNOSTIC AIDS

An intermittent condition is likely to be caused by a poor connection to the passenger inflator module terminal "2" or terminal "3" or a poor connection to the DERM at terminal "A7". The test for this diagnostic trouble code is only run while the "AIR BAG" warning lamp is performing the bulb check. When a scan tool "Clear Codes" command is issued and the malfunction is still present, the DTC will not reappear until the next ignition cycle.

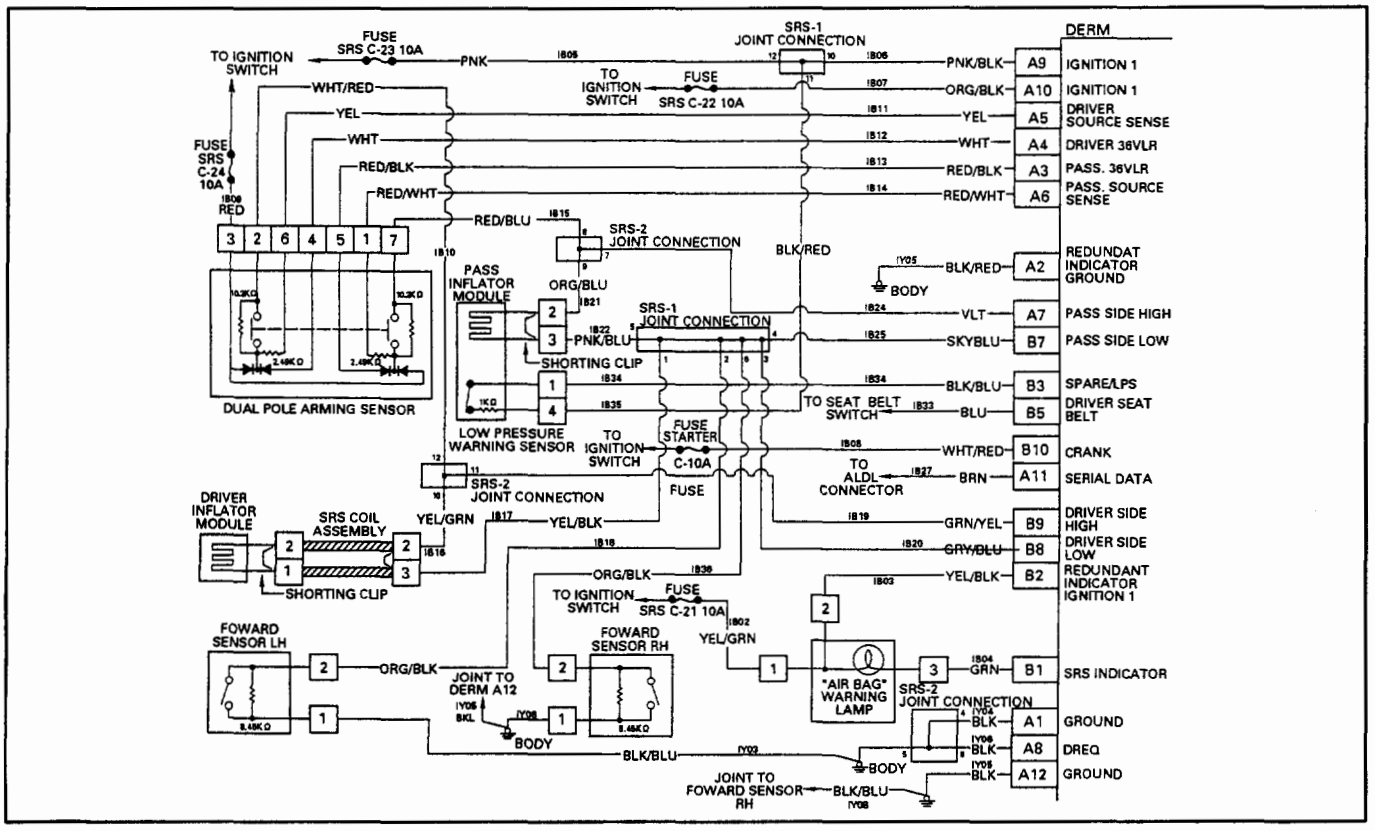

DTC 15

PASSENGER INITIATOR CIRCUIT RESISTANCE HIGH

STEP	ACTION	YES	NO
1	WAS THE "SRS DIAGNOSTIC SYSTEM CHECK" PERFORMED?	GO TO STEP2.	GO TO THE "SRS DIAGNOSTIC SYSTEM CHECK."
2	WHEN MEASUREMENTS ARE REQUESTED IN THIS CHART USE J–39200 DVM WITH CORRECT TERMINAL ADAPTER FROM J–35616–A. IGNITION SWITCH "OFF." DISCONNECT DRIVER AND PASSENGER INFLATOR MODULES, YELLOW 2–WAY OR 4–WAY CONNECTORS LOCATED AT THE TOP OF THE STEERING COLUMN AND BEHIND THE I/P COMPARTMENT DOOR ASSEMBLY. CONNECT J–41433 SRS DRIVER/PASSENGER LOAD TOOL TO STEERING COLUMN HARNESS CONNECTOR AND PASSENGER INFLATOR MODULE HARNESS CONNECTOR. IGNITION SWITCH "ON." IS DTC 15 CURRENT?	GO TO STEP3.	GO TO STEP5.
3	IGNITION SWITCH "OFF." DISCONNECT SRS DRIVER/PASSENGER LOAD TOOL. DISCONNECT DERM. CHECK FOR PROPER CONNECTION TO DERM AT TERMINAL "A7". IF OK THEN MEASURE RESISTANCE FROM DERM HARNESS CONNECTOR TERMINAL "A7" TO PASSENGER INFLATOR MODULE HARNESS CONNECTOR TERMINAL "2". IS RESISTANCE 2.0Ω OR LESS?	GO TO CHART A.	GO TO STEP4.
4	REPLACE SRS HARNESS.	GO TO STEP6.	
5	IGNITION SWITCH "OFF." REPLACE PASSENGER INFLATOR MODULE.	GO TO STEP6.	
6	RECONNECT ALL SRS COMPONENTS, ENSURE ALL COMPONENTS ARE PROPERLY MOUNTED. CLEAR SRS DIAGNOSTIC TROUBLE CODES. REPEAT THE "SRS DIAGNOSTIC SYSTEM CHECK."	GO TO THE "SRS DIAGNOSTIC SYSTEM CHECK".	

DTC 16

PASSENGER INITIATOR CIRCUIT RESISTANCE LOW

CIRCUIT DESCRIPTION

During the "Initiator Assembly Resistance Test" the DERM grounds the "Driver Side Low" terminal "B8" and turns "ON" the passenger current source at the "Passenger Side High" terminal "A7". This causes a known amount of current to flow through the passenger initiator circuit. By monitoring the difference between the voltage at the "Passenger Side High" terminal "A7" and the "Passenger Side Low" terminal "B7" the DERM calculates the combined resistance of the passenger inflator module, harness wiring CKTs IB21, IB22 and IB24 and connector terminal contact.

DTC WILL SET WHEN

The combined resistance of the passenger inflator module, harness wiring CKT's IB21, IB22, and IB24 and connector terminal contact is below a specified value. This test is run once each ignition cycle during the "Initiator Assembly Resistance Test" when: 1) No "higher priority faults" are detected during "Turn–ON," 2) No "higher priority faults" are detected during "Continuous Monitoring" for one second, 3) No "Crank" signal present, 4) "Ignition 1" voltage is above a specified value.

ACTION TAKEN

DERM turns "ON" the "AIR BAG" warning lamp and sets a diagnostic trouble code.

DTC WILL CLEAR WHEN

The ignition switch is turned "OFF."

DTC CHART TEST DESCRIPTION

Number(s) below refer to step number(s) on the diagnostic chart.

2. DTC 16 and 22 will set simultaneously when the "Driver Side High" circuit is shorted to the "Passenger Side High" circuit due to parallel current paths.
3. This test determines whether the malfunction is in the passenger inflator module circuitry or in the DERM wiring harness circuitry.
4. This test checks for a short from the "Passenger Side High" circuit to the "Passenger Side Low" circuit.

DIAGNOSTIC AIDS

An intermittent condition is likely to be caused by a short between CKT's IB15, IB21, IB24 and CKT's IB10, IB16, IB19 or CKT's IB17, IB18, IB20, IB22, IB25, IB36. The test for this diagnostic trouble code is only run while the "AIR BAG" warning lamp is performing the bulb check. When a scan tool "Clear Codes" command is issued and the malfunction is still present, the DTC will not reappear until the next ignition cycle.

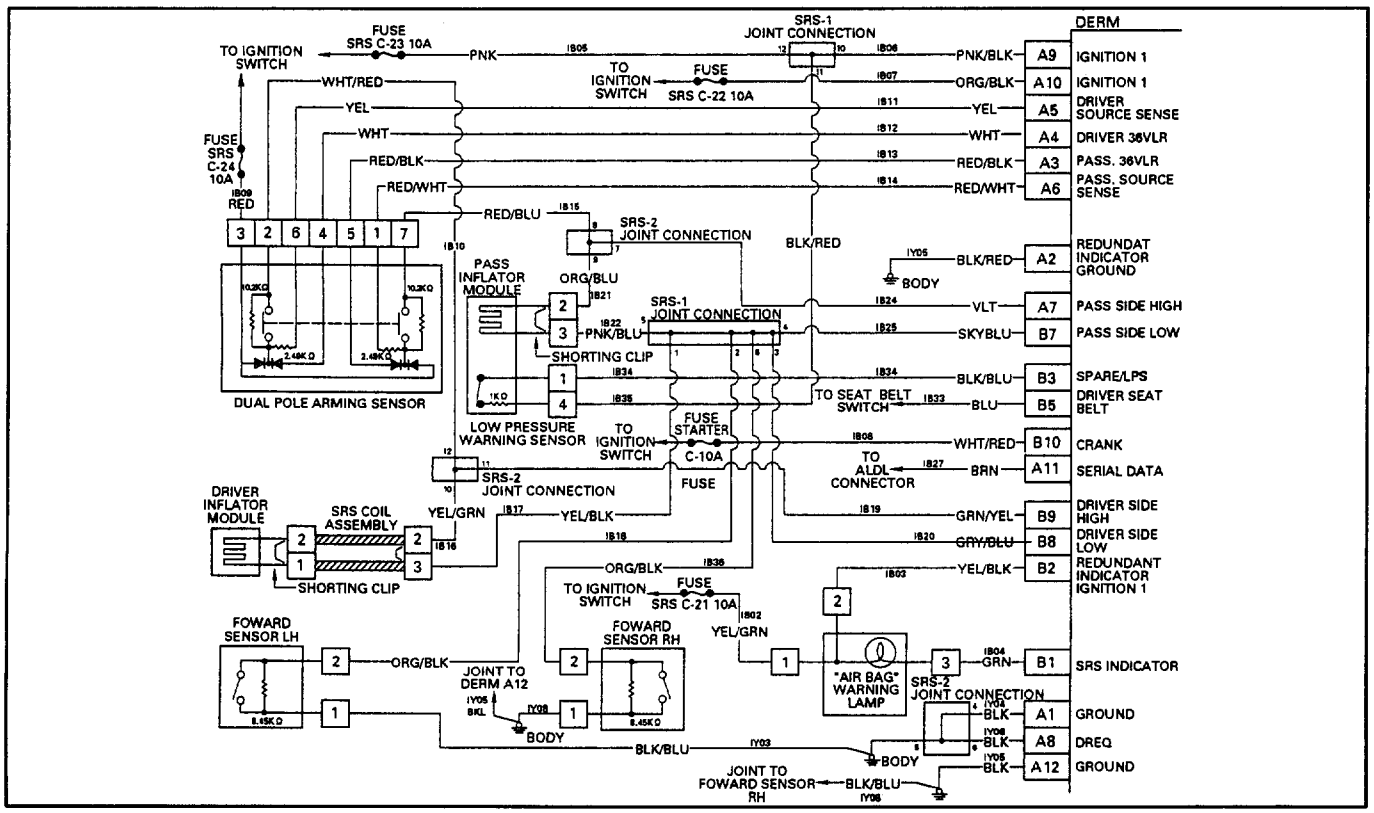

DTC 16

PASSENGER INITIATOR CIRCUIT RESISTANCE LOW

STEP	ACTION	YES	NO
1	WAS THE "SRS DIAGNOSTIC SYSTEM CHECK" PERFORMED?	GO TO STEP2.	GO TO THE "SRS DIAGNOSTIC SYSTEM CHECK."
2	WHEN MEASUREMENTS ARE REQUESTED IN THIS CHART USE J–39200 DVM WITH CORRECT TERMINAL ADAPTER FROM J–35616–A. IS DTC 22 ALSO CURRENT?	GO TO STEP5.	GO TO STEP3.
3	IGNITION SWITCH "OFF." DISCONNECT DRIVER AND PASSENGER INFLATOR MODULES, YELLOW 2–WAY OR 4–WAY CONNECTORS LOCATED AT THE TOP OF THE STEERING COLUMN AND BEHIND THE I/P COMPARTMENT DOOR ASSEMBLY. CONNECT J–41433 SRS DRIVER/PASSENGER LOAD TOOL TO STEERING COLUMN HARNESS CONNECTOR AND PASSENGER INFLATOR MODULE HARNESS CONNECTOR. IGNITION SWITCH "ON." IS DTC 16 CURRENT?	GO TO STEP4.	GO TO STEP6.
4	IGNITION SWITCH "OFF." DISCONNECT SRS DRIVER/PASSENGER LOAD TOOL. DISCONNECT DERM. MEASURE RESISTANCE ON DERM HARNESS CONNECTOR FROM TERMINAL "A7" TO TERMINAL "B7". DOES J–39200 DISPLAY "OL"(INFINITE)?	GO TO CHART A.	GO TO STEP7.
5	IGNITION SWITCH "OFF." DISCONNECT DRIVER AND PASSENGER INFLATOR MODULES, YELLOW 2–WAY OR 4–WAY CONNECTORS LOCATED AT THE TOP OF THE STEERING COLUMN AND BEHIND THE I/P COMPARTMENT DOOR ASSEMBLY. REPLACE SRS HARNESS.	GO TO STEP8.	
6	IGNITION SWITCH "OFF." REPLACE PASSENGER INFLATOR MODULE.	GO TO STEP8.	
7	REPLACE SRS HARNESS.	GO TO STEP8.	
8	RECONNECT ALL SRS COMPONENTS, ENSURE ALL COMPONENTS ARE PROPERLY MOUNTED. CLEAR SRS DIAGNOSTIC TROUBLE CODES. REPEAT THE "SRS DIAGNOSTIC SYSTEM CHECK."	GO TO THE "SRS DIAGNOSTIC SYSTEM CHECK".	

DTC 17

PASSENGER INITIATOR CIRCUIT OPEN

CIRCUIT DESCRIPTION

When there is an open in the passenger inflator module, the resistance between "Passenger Side High" terminal "A7" and "Passenger Side Low" terminal "B7" increases. This causes a larger voltage drop from the"Passenger Side High" to the "Passenger Side Low" across a resistor inside the DERM which connects these two terminals together. The increase in the voltage difference between "Passenger Side High" and "Passenger Side Low" is detected by the DERM during the "Continuous Monitoring" tests and DTC 17 is set.

DTC WILL SET WHEN

The voltage difference between "Passenger Side High" terminal "A7" and "Passenger Side Low" terminal "B7" is above or equal to a specified value for 500 milliseconds.

ACTION TAKEN

DERM turns "ON" the "AIR BAG" warning lamp and sets a diagnostic trouble code.

DTC WILL CLEAR WHEN

The voltage difference between "Passenger Side High" terminal "A7" and "Passenger Side Low" terminal "B7" is below a specified value for 500 milliseconds.

DTC CHART TEST DESCRIPTION

Number(s) below refer to step number(s) on the diagnostic chart.

2. This test determines whether the malfunction is in the passenger inflator module circuitry.

DIAGNOSTIC AIDS

This diagnostic trouble code will only set when there is an improper connection to the passenger inflator module, an improper connection to the passenger inflator module jumper or an open in the passenger inflator module or pigtail.

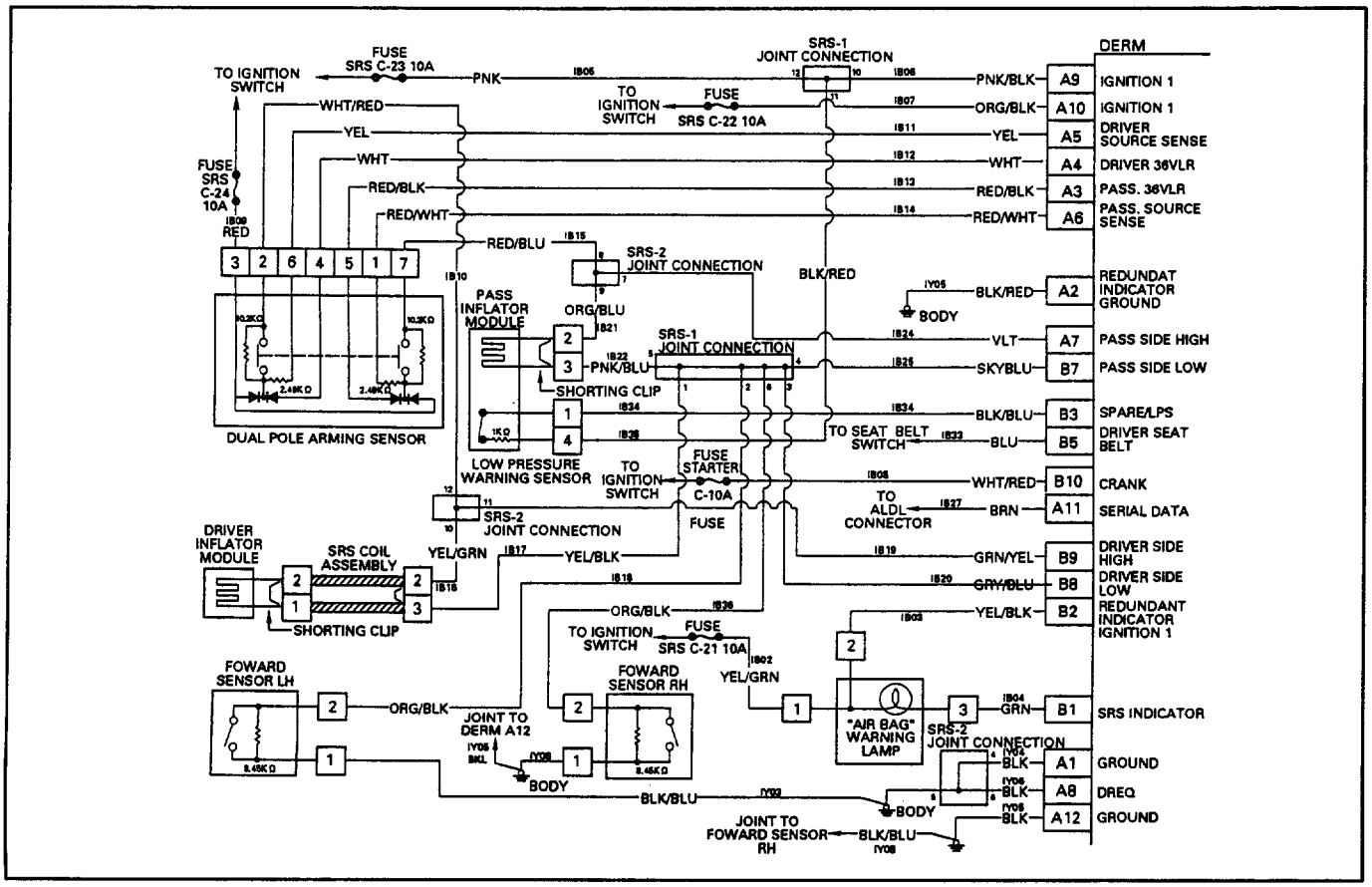

DTC 17

PASSENGER INITIATOR CIRCUIT OPEN

STEP	ACTION	YES	NO
1	WAS THE "SRS DIAGNOSTIC SYSTEM CHECK" PERFORMED?	GO TO STEP2.	GO TO THE "SRS DIAGNOSTIC SYSTEM CHECK."
2	WHEN MEASUREMENTS ARE REQUESTED IN THIS CHART USE J–39200 DVM WITH CORRECT TERMINAL ADAPTER FROM J–35616–A. IGNITION SWITCH "OFF." DISCONNECT DRIVER AND PASSENGER INFLATOR MODULES, YELLOW 2–WAY OR 4–WAY CONNECTORS LOCATED AT THE TOP OF THE STEERING COLUMN AND BEHIND THE I/P COMPARTMENT DOOR ASSEMBLY. CHECK FOR PROPER CONNECTION TO PASSENGER INFLATOR MODULE HARNESS AT TERMINALS "2" AND "3". IF OK THEN CONNECT J–41433 SRS DRIVER/PASSENGER LOAD TOOL TO PASSENGER INFLATOR MODULE HARNESS CONNECTOR. IGNITION SWITCH "ON." IS DTC 17 CURRENT?(DTC 26 WILL BE CURRENT DUE TO DISCONNECTED DRIVER INFLATOR MODULE.)	GO TO STEP3.	GO TO STEP4.
3	IGNITION SWITCH "OFF." REPLACE SRS HARNESS.	GO TO STEP5.	
4	IGNITION SWITCH "OFF." REPLACE PASSENGER INFLATOR MODULE.	GO TO STEP5.	
5	RECONNECT ALL SRS COMPONENTS, ENSURE ALL COMPONENTS ARE PROPERLY MOUNTED. CLEAR SRS DIAGNOSTIC TROUBLE CODES. REPEAT THE "SRS DIAGNOSTIC SYSTEM CHECK."	GO TO THE "SRS DIAGNOSTIC SYSTEM CHECK".	

DTC 18

DISCRIMINATING SENSOR INTERCONNECT OPEN

CIRCUIT DESCRIPTION

During the "Initiator Assembly Resistance Test" the DERM grounds the "Driver Side Low" terminal "B8" and measures the voltage at "Driver Side Low" and "Passenger Side Low." The DERM then grounds "Passenger Side Low" terminal "B7" and again measures the voltage at "Driver Side Low" and "Passenger Side Low."For a properly operating circuit the voltage measurements during each of these tests will be below a specified value. When the voltage measured at either "Driver Side Low" or "Passenger Side Low," but not both, is above a specified value during either test DTC 18 is set.

DTC WILL SET WHEN

The voltage measured at either "Driver Side Low" or "Passenger Side Low," but not both, is above a specified value while the DERM attempts to ground either of these terminals. This test is run during the "Initiator Assembly Resistance Test" and the "10 Minute Loop Test" when: 1) No "higher priority faults" are detected during "Turn–ON," 2) No "higher priority faults" are detected during "Continuous Monitoring" for one second, 3) No "Crank" signal present, 4) "Ignition 1" voltage is above a specified value.

ACTION TAKEN

DERM turns "ON" the "AIR BAG" warning lamp and sets a diagnostic trouble code.

DTC WILL CLEAR WHEN

The voltages measured at both "Driver Side Low" and "Passenger Side Low" are below specified value while the DERM grounds each of the terminals.

DTC CHART TEST DESCRIPTION

Number(s) below refer to step number(s) on the diagnostic chart.

2. This test checks whether the malfunction is in the wiring harness. The wiring harness malfunction is in the wiring harness. The wiring harness malfunction world be a high resistance rather than an open. An open would sets a different diagnostic trouble code.

DIAGNOSTIC AIDS

An intermittent condition is likely to be caused by a poor connection in JOINT CONNECTOR SRS–2. When a scan tool "Clear Codes" command is issued and the malfunction is still present, the DTC will not reappear for ten minutes or until the next ignition cycle.

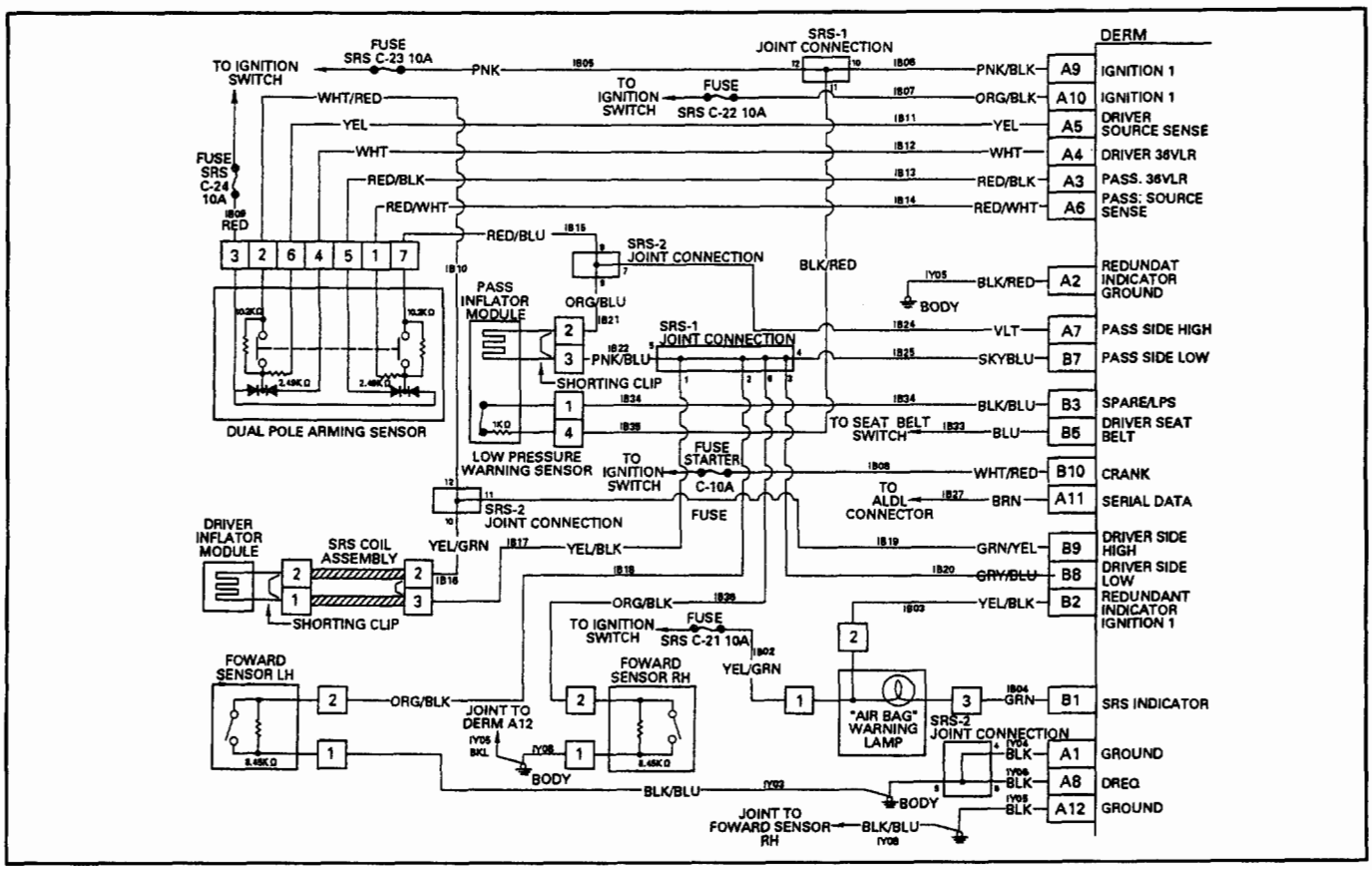

DTC 18

DISCRIMINATING SENSOR INTERCONNECT OPEN

STEP	ACTION	YES	NO
1	WAS THE "SRS DIAGNOSTIC SYSTEM CHECK" PERFORMED?	GO TO STEP2.	GO TO THE "SRS DIAGNOSTIC SYSTEM CHECK."
2	WHEN MEASUREMENTS ARE REQUESTED IN THIS CHART USE J–39200 DVM WITH CORRECT TERMINAL ADAPTER FROM J–35616–A. IGNITION SWITCH "OFF." DISCONNECT DRIVER AND PASSENGER INFLATOR MODULES, YELLOW 2–WAY OR 4–WAY CONNECTORS LOCATED AT THE TOP OF THE STEERING COLUMN AND BEHIND THE I/P COMPARTMENT DOOR ASSEMBLY. DISCONNECT CONNECTOR DERM. MEASURE RESISTANCE ON DERM HARNESS CONNECTOR FROM TERMINAL "B7" TO TERMINAL "B8". IS RESISTANCE 5.0Ω OR LESS?	GO TO CHART A.	GO TO STEP3.
3	REPLACE SRS HARNESS. RECONNECT ALL SRS COMPONENTS, ENSURE ALL COMPONENTS ARE PROPERLY MOUNTED. CLEAR SRS DIAGNOSTIC TROUBLE CODES. REPEAT THE "SRS DIAGNOSTIC SYSTEM CHECK."	GO TO THE "SRS DIAGNOSTIC SYSTEM CHECK".	

DTC 19

PASSENGER INITIATOR CIRCUIT VOLTAGE HIGH

CIRCUIT DESCRIPTION

During normal, non–deployment operation of the SRS, a small amount of current flows through both the driver and passenger deployment loops. The diagnostic resistors within the dual pole arming sensor and the discriminating sensors along with the resistance of the inflator modules cause voltage drops within the deployment loops. The DERM monitors the voltage at "Passenger Side Low" terminal "B7" to detect shorts or opens within the passenger deployment loop. When the measured voltage is above a specified percentage of "Passenger 36 VLR" for 500 milliseconds DTC 19 is set.

DTC WILL SET WHEN

The voltage measured at "Passenger Side Low" terminal "B7" is above a specified percentage of "Passenger 36 VLR" for 500 milliseconds and DTC 35 is not set. This test is run every 100 milliseconds during the "Continuous Monitoring" tests.

ACTION TAKEN

DERM turns "ON" the "AIR BAG" warning lamp and sets a diagnostic trouble code.

DTC WILL CLEAR WHEN

The voltage measured at "Passenger Side Low" terminal "B7" is within a specified percentage of "Passenger 36 VLR" for 500 milliseconds.

DTC CHART TEST DESCRIPTION

Number(s) below refer to step number(s) on the diagnostic chart.

2. DTC 19 and 23 together means that there is both open Forward Sensor LH and Forward Sensor RH, or internal short in dual pole arming sensor.
3. This test checks for decreased resistance in driver side diagnostic resistors of the dual pole arming sensor.
4. This test checks for decreased resistance in the passenger side diagnostic resistors of the dual pole arming sensor.
5. This test determines whether the malfunction is in the Forward Sensor RH/LH circuitry.
7. This test determines whether the malfunction is in the FORWARD SENSOR RH/LH ENG, ROOM HARNESS or FORWARD SENSOR RH/LH.
10. This test determines whether the malfunction is in the FORWARD SENSOR RH/LH.

DIAGNOSTIC AIDS

An open between the passenger inflator module and the forward discriminating sensor causes the voltage to increase at "Passenger Side Low" due to the loss of a ground path. This also causes the voltage to decrease at "Driver Side Low" due to decreased current flow through the discriminating sensor network. Intermittent condition is likely to be caused by backed out shorted terminals on the arming sensor harness connector, poor connection at any of the discriminating sensor terminals.

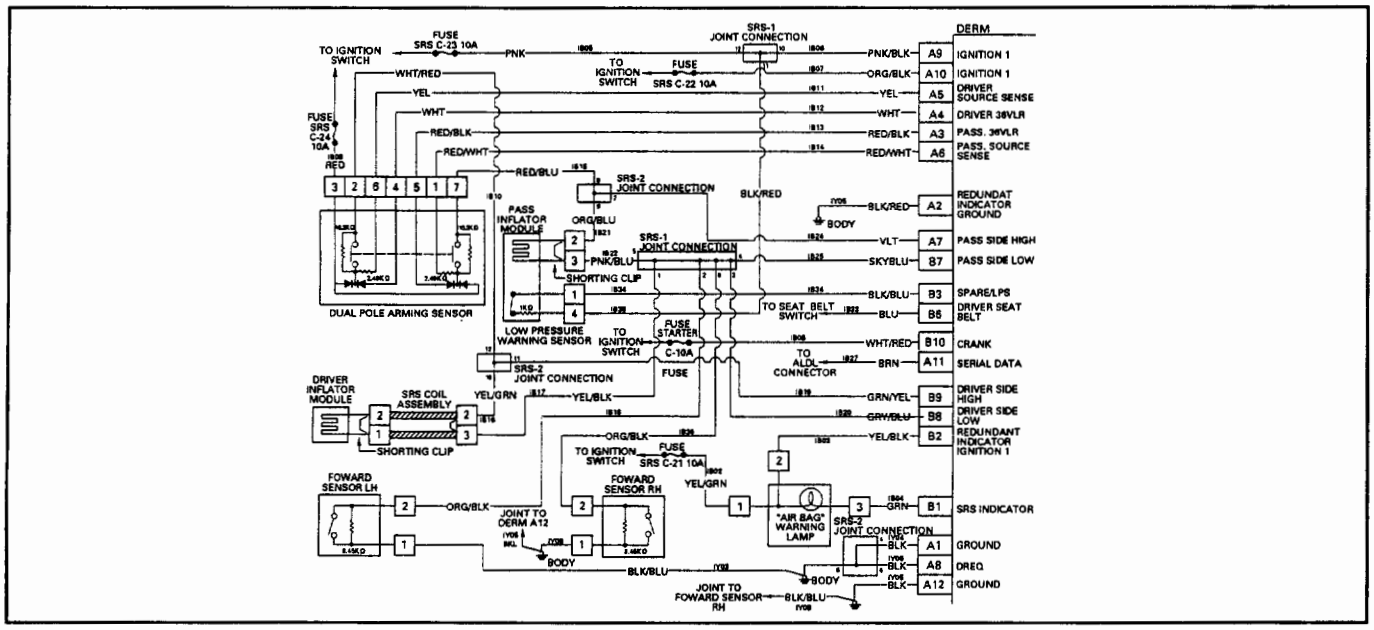

DTC 19

PASSENGER INITIATOR CIRCUIT VOLTAGE HIGH

STEP	ACTION	YES	NO
1	WAS THE "SRS DIAGNOSTIC SYSTEM CHECK" PERFORMED	GO TO STEP2.	GO TO THE "SRS DIAGNOSTIC SYSTEM CHECK."
2	WHEN MEASUREMENTS ARE REQUESTED IN THIS CHART USE J–39200 DVM WITH CORRECT TERMINAL ADAPTER FROM J–35616–A. IS DTC 23 ALSO CURRENT?	GO TO STEP5.	GO TO STEP3.
3	IGNITION SWITCH "OFF." DISCONNECT DRIVER AND PASSENGER INFLATOR MODULES, YELLOW 2–WAY OR 4–WAY CONNECTORS, LOCATED AT THE TOP OF THE STEERING COLUMN AND BEHIND THE I/P COMPARTMENT DOOR ASSEMBLY. DISCONNECT DERM AND DUAL POLE ARMING SENSOR. INSPECT DUAL POLE ARMING SENSOR HARNESS CONNECTOR FOR BACKED OUT AND/OR SHORTED TERMINALS. IF OK THEN MEASURE RESISTANCE ON DUAL POLE ARMING SENSOR FROM TERMINAL "2" TO TERMINAL "6". IS RESISTANCE 12.5KΩ OR LESS?	GO TO STEP6.	GO TO STEP4.
4	MEASURE RESISTANCE ON DUAL POLE ARMING SENSOR FROM TERMINAL "1" TO TERMINAL "7". IS RESISTANCE 12.5KΩ OR LESS?	GO TO STEP9.	GO TO STEP8.
5	IGNITION SWITCH "OFF." DISCONNECT DRIVER AND PASSENGER INFLATOR MODULES, YELLOW 2–WAY OR 4–WAY CONNECTORS LOCATED AT THE TOP OF THE STEERING COLUMN AND BEHIND THE I/P COMPARTMENT DOOR ASSEMBLY. MEASURE RESISTANCE ON DERM HARNESS CONNECTOR FROM TERMINAL "B7" TO TERMINAL "A12". DOES J–39200 DISPLAY "OL"(INFINITE)?	GO TO STEP7.	GO TO CHART A.
6	REPLACE DUAL POLE ARMING SENSOR.	GO TO STEP12.	
7	DISCONNECT FROM FORWARD SENSOR RH/LH ENG, ROOM HARNESS CONNECTOR TO SRS HARNESS CONNECTOR LOCATED NEAR THE DRIVER SIDE DASH SIDE LOWER AND BEHIDE THE I/P COMPARTMENT DOOR ASSEMBLY. CHECK FOR PROPER CONNECTION. IF OK THEN MEASURE RESISTANCE ON ENG, ROOM HARNESS CONNECTOR FROM TERMINAL "1" TO "2" DOES J39200 DISPLAY "OL"(INFINITE)?	GO TO STEP10.	REPLACE SRS HARNESS. GO TO STEP12.
8	REPLACE SRS HARNESS.	GO TO STEP12.	
9	REPLACE DUAL POLE ARMING SENSOR.	GO TO STEP12.	
10	DISCONNECT FORWARD SENSOR RH/LH. MEASURE RESISTANCE ON FORWARD SENSOR RH/LH CONNECTOR FROM TERMINAL "1" TO "2". DOES J–39200 DISPLAY "OL"(INFINITE)?	GO TO STEP11.	REPLACE FORWARDSENSOR RH ENG, ROOM HARNESS AND/OP FORWARD SENSOR LH ENG, ROOM HARNESS GO TO STEP12.
11	REPLACE FORWARD SENSOR RH.	GO TO STEP12.	
12	RECONNECT ALL SRS SYSTEM COMPONENTS, ENSURE ALL COMPONENTS ARE PROPERLY MOUNTED. CLEAR SRS DIAGNOSTIC TROUBLE CODE. REPEAT THE "SRS DIAGNOSTIC SYSTEM CHECK."	GO TO THE "SRS DIAGNOSTIC SYSTEM CHECK".	

DTC 21

DRIVER INITIATOR CIRCUIT RESISTANCE HIGH

CIRCUIT DESCRIPTION

During the "Initiator Assembly resistance Test" the DERM grounds the "Passenger Side Low" terminal "B7" and turns "ON" the driver current source at the "Driver Side High" terminal "B9". This causes a known amount of Current to flow through the driver initiator circuit. By monitoring the difference between the voltage at the "Driver Side High" terminal "B9" and the "Driver Side Low" terminal "B8" the DERM calculates the combined resistance of the driver inflator module, SRS coil assembly, harness wiring CKTs IB16, IB17 and IB19 and connector terminal contact.

DTC WILL SET WHEN

The combined resistance of the driver inflator module, SRS coil assembly, harness wiring CKT's IB16, IB17 and IB19 and connector terminal contact is above a specified value. This test is run during the "Initiator Assembly Resistance Test" when: 1) No "higher priority faults" are detected during "Turn–ON," 2) No "higher priority faults" are detected during "Continuous Monitoring" for one second, 3) No "Crank" signal present, 4) "Ignition 1" voltage is above a specified value.

ACTION TAKEN

DERM turns "ON" the "AIR BAG" warning lamp and sets diagnostic trouble code.

DTC WILL CLEAR WHEN

The ignition switch is turned "OFF."

DTC CHART TEST DESCRIPTION

Number(s) below refer to step number(s) on the diagnostic chart.

2. This test determines whether the malfunction is in the driver inflator module circuitry or in the DERM wiring harness circuitry.
3. This test determines whether the malfunction is an open in IB19.

DIAGNOSTIC AIDS

An intermittent condition is likely to be caused by a poor connection at: the yellow 2–way connector near the base of the steering column, DERM terminals "B8" or "B9", or the connection at the top of steering column to the driver inflator module.

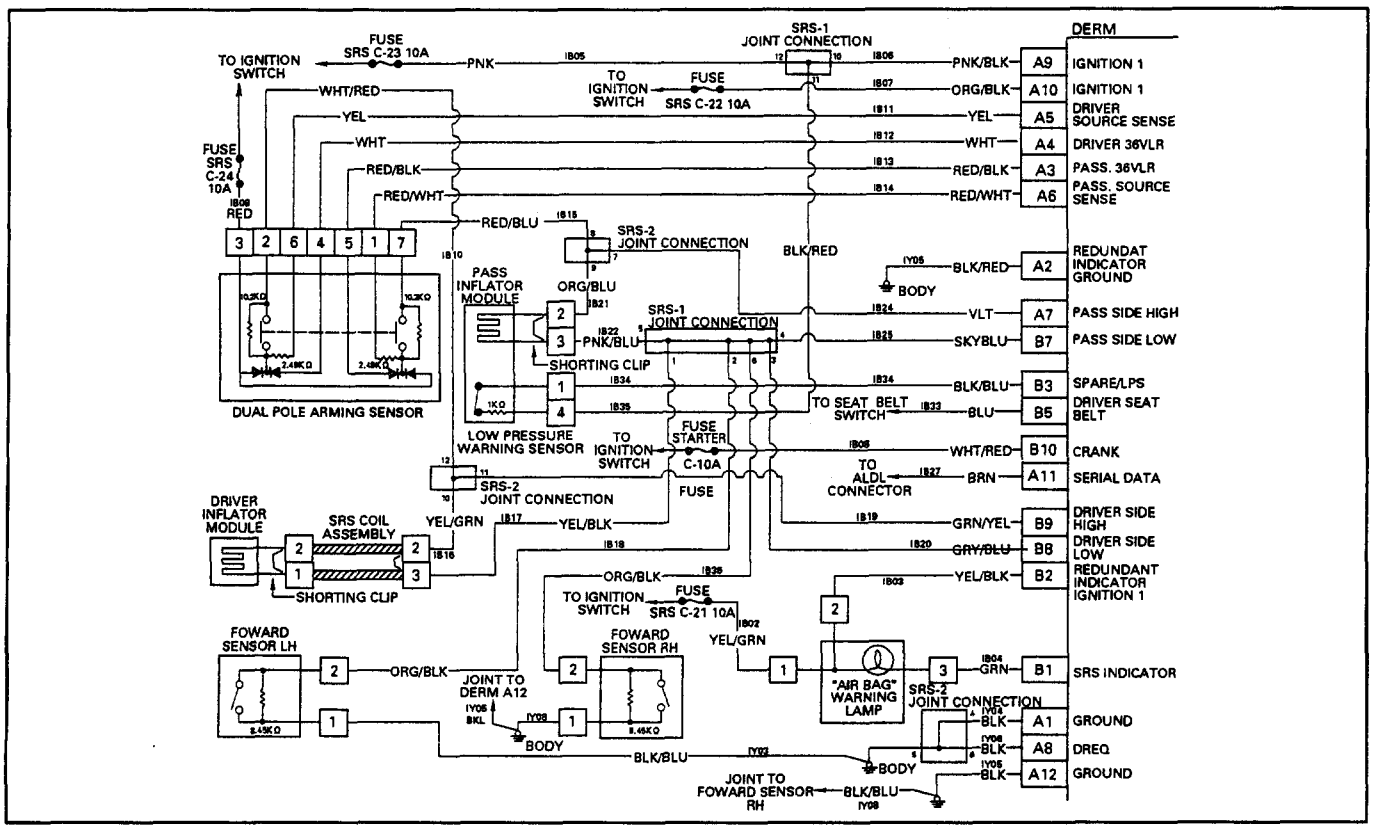

DTC 21

DRIVER INITIATOR CIRCUIT RESISTANCE HIGH

STEP	ACTION	YES	NO
1	WAS THE "SRS DIAGNOSTIC SYSTEM CHECK" PERFORMED?	GO TO STEP2.	GO TO THE SRS DIAGNOSTIC SYSTEM CHECK."
2	WHEN MEASUREMENTS ARE REQUESTED IN THIS CHART USE J–39200 DVM WITH CORRECT TERMINAL ADAPTER FROM J–356F1D6–A. IGNITION SWITCH "OFF." DISCONNECT DRIVER AND PASSENGER INFLATOR MODULES, YELLOW 2–WAY OR 4–WAY CONNECTORS LOCATED AT THE TOP OF THE STEERING COLUMN AND BEHIND I/P COMPARTMENT DOOR ASSEMBLY. CHECK FOR PROPER CONNECTION TO STEERING COLUMN CONNECTOR AT TERMINALS "1" AND "2". IF OK THEN CONNECT J–41433 SIR DRIVER/PASSENGER LOAD TOOL STEERING COLUMN HARNESS CONNECTOR AND PASSENGER INFLATOR MODULE HARNESS CONNECTOR. IGNITION SWATCH"ON." IS DTC 21 CURRENT?	GO TO STEP3.	GO TO STEP4.
3	IGNITION SWITCH "OFF." DISCONNECT SRS COIL.DISCONNECT DERM. CHECK FOR PROPER CONNECTION TO DERM AT TERMINAL "B9". IF OK THEN MEASURE RESISTANCE FROM DERM HARNESS CONNECTOR TERMINAL "B9" TO SRS COIL HARNESS CONNECTOR TERMINAL "2". IS RESISTANCE 2.0Ω OR LESS?	GO TO STEP5.	GO TO STEP6.
4	IGNITION SWITCH "OFF." REPLACE DRIVER INFLATOR MODULE, REFER TO IN THIS SECTION 3.	GO TO STEP7.	
5	REPLACE SRS COIL REFER TO IN THE SECTION 3.	GO TO CHART A	
6	REPLACE SRS HARNESS.	GO TO STEP7.	
7	RECONNECT ALL SRS COMPONENTS, ENSURE ALL COMPONENTS ARE PROPERLY MOUNTED. CLEAR SRS DIAGNOSTIC TROUBLE CODES. REPEAT THE "SRS DIAGNOSTIC SYSTEM CHECK."	GO TO THE "SRS DIAGNOSTIC SYSTEM CHECK".	

DTC 22

DRIVER INITIATOR CIRCUIT RESISTANCE LOW

CIRCUIT DESCRIPTION

During the "Initiator Assembly resistance Test" the DERM grounds the "Passenger Side Low" terminal "B7" and turns "ON" the driver current source at the "Driver Side High" terminal "B9". This causes a known amount of current to flow through the driver initiator circuit. By monitoring the difference between the voltage at the "Driver Side High" terminal "B9" and the "Driver Side Low" terminal "B8" the DERM calculates the combined resistance of the driver inflator module, SRS coil assembly, harness wiring CKTs IB16, IB17 and IB19 and connector terminal contact.

DTC WILL SET WHEN

The combined resistance of the driver inflator module, SRS coil assembly, harness wiring CKT's IB16, IB17 and IB19 and connector terminal contact is above a specified value. This test is run during the "Initiator Assembly Resistance Test" when: 1) No "higher priority faults" are detected during "Turn–ON," 2) No "higher priority faults" are detected during "Continuous Monitoring" for one second, 3) No "Crank" signal present, 4) "Ignition 1" voltage is above a specified value.

ACTION TAKEN

DERM turns "ON" the "AIR BAG" warning lamp and sets diagnostic trouble code.

DTC WILL CLEAR WHEN

The ignition switch is turned "OFF."

DTC CHART TEST DESCRIPTION

Number(s) below refer to step number(s) on the diagnostic chart.

2. DTC 16 and 22 will set simultaneously when the "Driver Side High" circuit due to parallel current paths.
3. This test determines whether the malfunction is in the driver inflator module circuitry or in the DERM wiring harness circuitry.
4. This test checks for a short from the "Driver Side High" circuit to the "Driver Side Low" circuit.

DIAGNOSTIC AIDS

An intermittent condition is likely to be caused by a short between CKT IB17 and CKT IB16 or CKT IB19 or a malfunctioning shorting clip at the base of the steering column. The test for this diagnostic trouble code is only run while the "AIR BAG" warning lamp is performing the bulb check. When a scan tool "Clear Codes" command is issued and the malfunction is still present, the DTC will not reappear until the next ignition cycle.

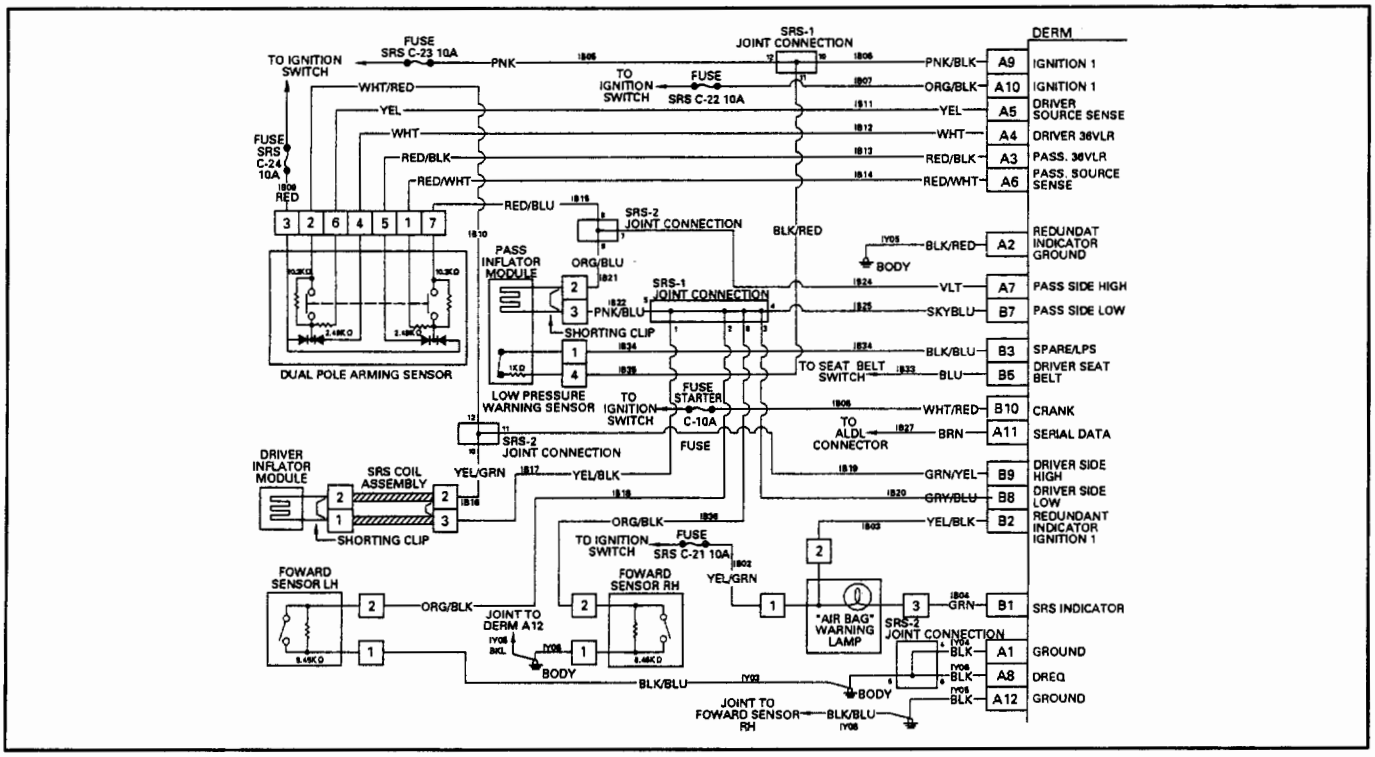

DTC 22

DRIVER INITIATOR CIRCUIT RESISTANCE LOW

STEP	ACTION	YES	NO
1	WAS THE "SRS DIAGNOSTIC SYSTEM CHECK" PERFORMED?	GO TO STEP2.	GO TO THE "SRS DIAGNOSTIC SYSTEM CHECK."
2	WHEN MEASUREMENTS ARE REQUESTED IN THIS CHART USE J–39200 DVM WITH CORRECT TERMINAL ADAPTER FROM J–35616–A. IS DTC 16 ALSO CURRENT?	GO TO STEP6.	GO TO STEP3.
3	IGNITION SWITCH "OFF." DISCONNECT DRIVER AND PASSENGER INFLATOR MODULES, YELLOW 2–WAY OR 4–WAY CONNECTORS LOCATED AT THE TOP OF THE STEERING COLUMN AND BEHIND THE I/P COMPARTMENT DOOR ASSEMBLY. CONNECT J–41433 SRS DRIVER/PASSENGER LOAD TOOL TO STEERING COLUMN HARNESS CONNECTOR AND PASSENGER INFLATOR MODULE HARNESS CONNECTOR. IGNITION SWITCH "ON." IS DTC 22 CURRENT?	GO TO STEP4.	GO TO STEP7.
4	IGNITION SWITCH "OFF." DISCONNECT SRS COIL. DISCONNECT DERM. MEASURE RESISTANCE ON DERM HARNESS CONNECTOR FROM TERMINAL "B8" TO TERMINAL "B9". DOES J–39200 DISPLAY "OL"(INFINITE)?	GO TO STEP5.	GO TO STEP8.
5	REPLACE SRS COIL, REFER TO IN THIS SECTION 3.	GO TO CHART A.	
6	IGNITION SWITCH "OFF." DISCONNECT DRIVER AND PASSENGER INFLATOR MODULE, YELLOW 2–WAY OR 4–WAY CONNECTORS LOCATED AT THE TOP OF THE STEERING COLUMN AND BEHIND THE I/P COMPARTMENT DOOR ASSEMBLY. REPLACE SRS HARNESS.	GO TO STEP9.	
7	IGNITION SWITCH "OFF." REPLACE DRIVER INFLATOR MODULE, REFER TO SECTION 3F.	GO TO STEP9.	
8	REPLACE SRS HARNESS.	GO TO STEP9.	
9	RECONNECT ALL SRS SYSTEM COMPONENTS, ENSURE ALL COMPONENTS ARE PROPERLY MOUNTED. CLEAR SRS DIAGNOSTIC TROUBLE CODE. REPEAT THE "SRS DIAGNOSTIC SYSTEM CHECK."	GO TO THE "SRS DYAGNOSTIC SYSTEM CHECK"	

DTC 23

DRIVER INITIATOR CIRCUIT VOLTAGE HIGH

CIRCUIT DESCRIPTION

During normal, non–deployment operation of the SRS, a small amount of current flows through both the driver and passenger deployment loops. The diagnostic resistors within the dual pole arming sensor and the discriminating sensors along with the resistance of the inflator modules cause voltage drops within the deployment loops. The DERM monitors the voltage at "Driver Side Low" terminal "B8" to detect shorts or opens within the driver deployment loop. When the measured voltage is above a specified percentage of "Driver 36 VLR for 500 milliseconds DTC 23 is set.

DTC WILL SET WHEN

The voltage measured at "Driver Side Low" terminal "B8" is above a specified percentage of "Driver 36 VLR" for 500 milliseconds and DTC 35 is not set. This test is run during the "Continuous Monitoring" tests.

ACTION TAKEN

DERM turns "ON" the "AIR BAG" warning lamp and sets a diagnostic trouble code.

DTC WILL CLEAR WHEN

The voltage measured at "Driver Side Low" terminal "B8" is within a specified percentage of "Driver 36 VLR" for 500 milliseconds.

DTC CHART TEST DESCRIPTION

Number(s) below refer to step number(s) on the diagnostic chart.

2. DTC 19 and 23 together means that there is both open FORWARD SENSOR LH and FORWARD SENSOR RH, or internal short in dual pole arming sensor.

3. This test determines whether the malfunction is an open in SRS HARNESS.

DIAGNOSTIC AIDS

An open between the driver inflator module harness connector and the discriminating sensor interconnect causes the voltage to increase at "Driver Side Low" due to the loss of a ground path. This also causes the voltage to decrease at "Passenger Side Low" due to decreased current flow through the discriminating sensor network.

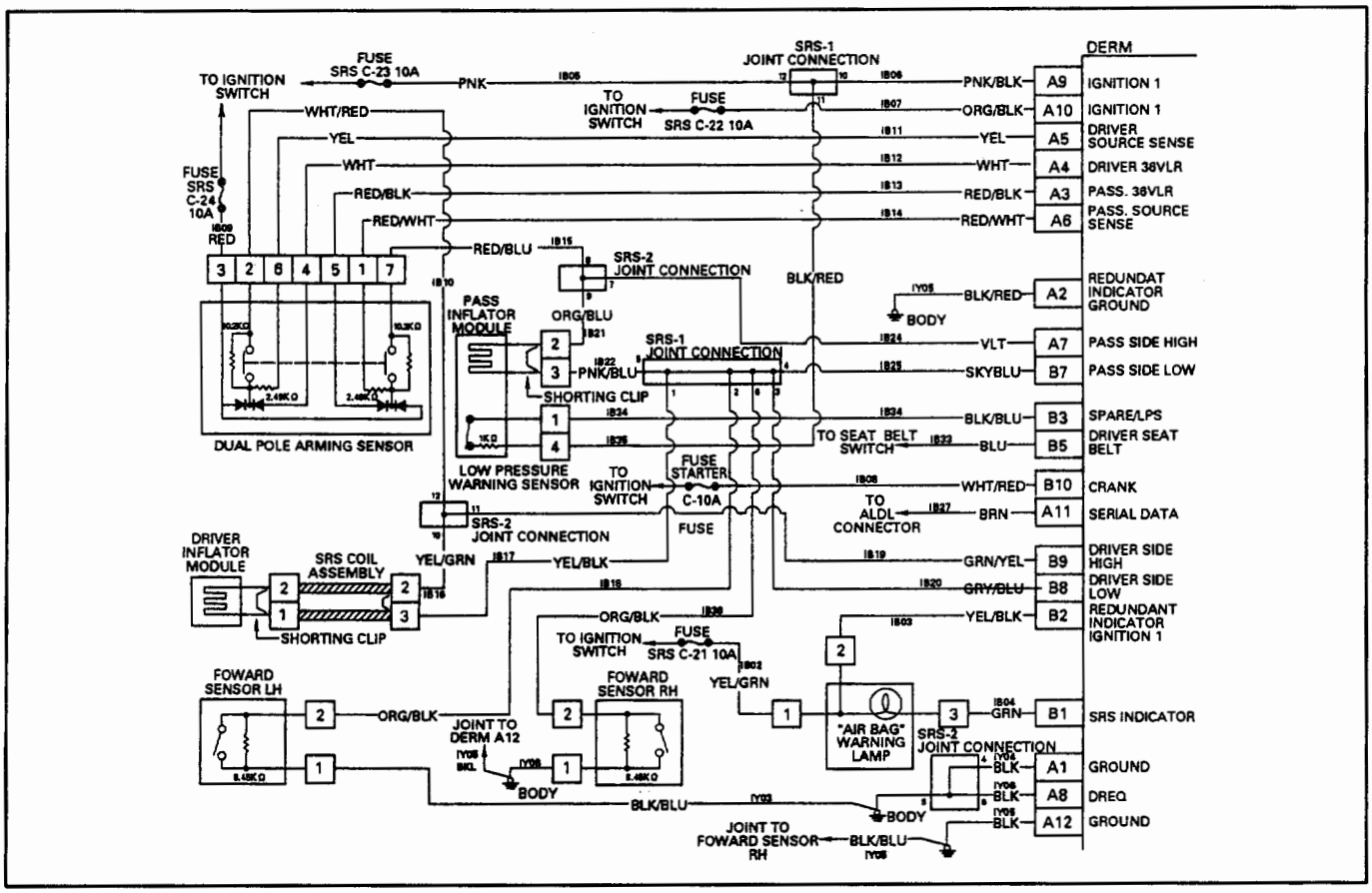

DTC 23

DRIVER INITIATOR CIRCUIT RESISTANCE HIGH

STEP	ACTION	YES	NO
1	WAS THE "SRS DIAGNOSTIC SYSTEM CHECK" PERFORMED?	GO TO STEP2.	GO TO THE SRS DIAGNOSTIC SYSTEM CHECK."
2	WHEN MEASUREMENTS ARE REQUESTED IN THIS CHART USE J–39200 DVM WITH CORRECT TERMINAL ADAPTER FROM J–35616–A. IS DTC 19 ALSO CURRENT?	GO TO DTC 19.	GO TO STEP3.
3	IGNITION SWITCH "OFF." DISCONNECT DRIVER AND PASSENGER INFLATOR MODULES, YELLOW 2–WAY OR 4–WAY CONNECTORS LOCATED AT THE TOP OF THE STEERING COLUMN AND BEHIND I/P COMPARTMENT DOOR ASSEMBLY AND. MEASURE RESISTANCE FROM SRS COIL HARNESS CONNECTOR TERMINAL "1" TO PASSENGER INFLATOR MODULE HARNESS CONNECTOR TERMINAL "3". IS RESISTANCE 5.0 Ω OR LESS?	GO TO CHART A.	GO TO STEP4.
4	DISCONNECT SRS COIL , YELLOW 3–WAY CONNECTOR LOCATED NEAR THE BASE OF THE STEERING COLUMN. MEASURE RESISTANCE FROM SRS COIL CONNECTOR TERMINAL INFLATOR SIDE TERMINAL "1" TO SRS HARNESS SIDE TERMINAL "3". IS RESISTANCE 2.0Ω OR LESS?	GO TO STEP5.	GO TO STEP6.
5	REPLACE SRS HARNESS.	GO TO STEP6.	
6	REPLACE SRS COIL, REFER TO IN THIS SECTION 3.	GO TO STEP6.	
7	RECONNECT ALL SRS COMPONENT, ENSURE ALL COMPONENTS ARE PROPERLY MOUNTED. CLEAR SRS DIAGNOSTIC TROUBLE CODES. REPEAT THE "SRS DIAGNOSTIC SYSTEM CHECK".	GO TO THE "SRS DIAGNOSTIC SYSTEM CHECK".	

DTC 24 (PAGE 1 OF 3)

INITIATOR CIRCUIT VOLTAGE LOW

CIRCUIT DESCRIPTION

During normal, non–deployment operation of the SRS, a small amount of current flows through both the driver and passenger deployment loops. The diagnostic resistors within the dual pole arming sensor and the discriminating sensors along with the resistance of the inflator modules cause voltage drops within the deployment loops. The DERM monitors the voltage at "Driver Side Low" terminal "B8" and "Passenger Side Low" terminal "B7" to detect shorts or opens within the driver deployment loop. When the measured voltage at terminal "B8" or "B7" is below a specified percentage of its respective Driver 36 VLR power supply voltage for 500 milliseconds DTC 24 is set.

DTC WILL SET WHEN

The voltage measured at "Driver Side Low" terminal "B8" is below a specified percentage of "Driver 36 VLR" or when the voltage measured at "Passenger Side Low" terminal "B7" is below a specified percentage of "Passenger 36 VLR" for 500 milliseconds. This test is run during the "Continuous Monitoring" test.

ACTION TAKEN

DERM turns "ON" the "AIR BAG" warning lamp and sets a diagnostic trouble code.

DTC WILL CLEAR WHEN

The voltage measured at "Driver Side Low" terminal "B8" is within a specified percentage of "Driver 36 VLR" and the voltage measured at "Passenger Side Low" terminal "B7" is within a specified percentage of "Passenger 36 VLR" for 500 milliseconds.

DTC CHART TEST DESCRIPTION

Number(s) below refer to step number(s) on the diagnostic chart.

2. This test determines whether the malfunction is occurring in the steering column circuitry.
3. This test determines whether the malfunction is occurring in the passenger inflator module circuitry.
4. This test check's for a short from the SRS COIL to ground.

DIAGNOSTIC AIDS

An intermittent condition is likely to be caused by a poor connection at DERM terminals "A3" and "A4", dual pole arming sensor terminals "2", "4", "5" or "7",water intrusion in any discriminating sensor, an open in CKT IB10 or CKT IB15, or a short to ground in CKT's IB10, IB15, IB16, IB17, IB18, IB19, IB20, IB21, IB22, IB24, IB25, IB36. Refer to DTC 25 diagnose a possible short to B+. When the malfunction occurs during an ignition cycle DTC 24 will set. If the malfunction is present at the beginning of the next ignition cycle DTC 25 will set and DTC 24 will be moved to a history file.

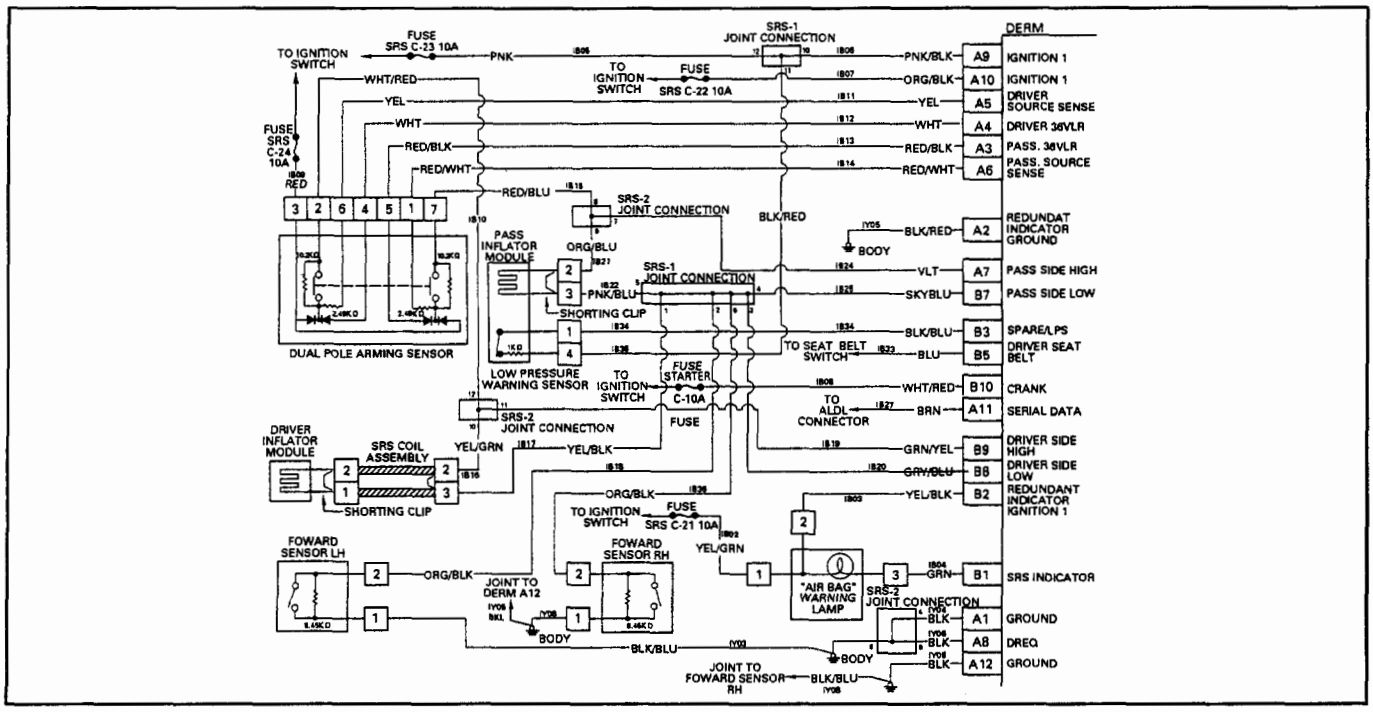

DTC 24 (PAGE 1 OF 3)

INITIATOR CIRCUIT VOLTAGE LOW

STEP	ACTION	YES	NO
1	WAS THE "SRS DIAGNOSTIC SYSTEM CHECK" PERFORMED?	GO TO STEP2.	GO TO THE SRS DIAGNOSTIC SYSTEM CHECK."
2	WHEN MEASUREMENTS ARE REQUESTED IN THIS CHART USE J–39200 DVM WITH CORRECT TERMINAL ADAPTER FROM J–35616–A. IGNITION SWITCH "OFF." DISCONNECT DRIVER INFLATOR MODULE, YELLOW 2–WAY CONNECTOR AT THE TOP OF THE STEERING COLUMN, LEAVE PASSENGER INFLATOR MODULE CONNECTED. CONNECT SRS DRIVER/PASSENGER LOAD TOOL J–41433 TO DRIVER INFLATOR MODULE HARNESS CONNECTOR. IGNITION SWITCH "ON." IS DTC 24 CURRENT?	GO TO STEP3.	GO TO STEP5.
3	IGNITION SWITCH "OFF." DISCONNECT PASSENGER INFLATOR MODULE YELLOW 4–WAY CONNECTOR LOCATED BEHIND THE I/P COMPARTMENT DOOR ASSEMBLY. CONNECT SRS DRIVER/PASSENGER INFLATOR MODULE HARNESS CONNECTOR, LEAVE DRIVER INFLATOR MODULE HARNESS CONNECTOR CONNECTED TO LOAD TOOL. IGNITION SWITCH "ON." IS DTC 24 CURRENT?	GO TO STEP4.	GO TO STEP6.
4	IGNITION SWITCH "OFF." DISCONNECT YELLOW 3–WAY SRS COIL CONNECTOR LOCATED NEAR THE BASE OF THE STEERING COLUMN. DISCONNECT DERM. MEASURE RESISTANCE ON SRS COIL HARNESS CONNECTOR TERMINAL "3" TO DERM HARNESS CONNECTOR TERMINAL "A1". IS RESISTANCE 5.0Ω OR LESS?	GO TO STEP7.	CONTINUE WITH DIAGNOSIS ON NEXT PAGE.
5	IGNITION SWITCH "OFF." REPLACE INFLATOR MODULE AT THE TOP OF THE STEERING COLUMN REFER TO IN THIS SECTION 3.	GO TO STEP8.	
6	IGNITION SWITCH "OFF." REPLACE INFLATOR MODULE IN THE I/P COMPONENT.	GO TO STEP8.	
7	REPLACE SRS COIL.	GO TO STEP8.	
8	RECONNECT ALL SRS COMPONENTS, ENSURE ALL COMPONENTS SRS PROPERLY MOUNTED. CLEAR SRS DIAGNOSTIC TROUBLE CODES. REPEAT THE "SRS DIAGNOSTIC SYSTEM CHECK".	GO TO THE "SRS DIAGNOSTIC SYSTEM CHECK".	

DTC 24 (PAGE 2 OF 3)

INITIATOR CIRCUIT VOLTAGE LOW

CIRCUIT DESCRIPTION

During normal, non–deployment operation of the SRS, a small amount of current flows through both the driver and passenger deployment loops. The diagnostic resistors within the dual pole arming sensor and the discriminating sensors along with the resistance of the inflator modules cause voltage drops within the deployment loops. The DERM monitors the voltage at "Driver Side Low" terminal "B8" and "Passenger Side Low" terminal "B7" to detect shorts or opens within the driver deployment loop. When the measured voltage at terminal "B8" or "B7" is below a specified percentage of its respective Driver 36 VLR power supply voltage for 500 milliseconds DTC 24 is set.

DTC WILL SET WHEN

The voltage measured at "Driver Side Low" terminal "B8" is below a specified percentage of "Driver 36 VLR" or when the voltage measured at "Passenger Side Low" terminal "B7" is below a specified percentage of "Passenger 36 VLR" for 500 milliseconds. This test is run during the "Continuous Monitoring" test.

ACTION TAKEN

DERM turns "ON" the "AIR BAG" warning lamp and sets a diagnostic trouble code.

DTC WILL CLEAR WHEN

The voltage measured at "Driver Side Low" terminal "B8" is within a specified percentage of "Driver 36 VLR" and the voltage measured at "Passenger Side Low" terminal "B7" is within a specified percentage of "Passenger 36 VLR" for 500 milliseconds.

DTC CHART TEST DESCRIPTION

Number(s) below refer to step number(s) on the diagnostic chart.

10. This test checks for a short from the low side of the driver deployment loop to ground.
11. This test checks for a partial short across the diagnostic resistor in the forward discriminating sensor.
12. This test checks for a partial short across the diagnostic resistor in the passenger compartment discriminating sensor.
13. This test checks for a short from the discriminating sensor interconnect circuit to ground.
14. This test checks for a short from the low side of the driver deployment loop to ground.

DIAGNOSTIC AIDS

Refer to DTC 24(Page 1 of 3).

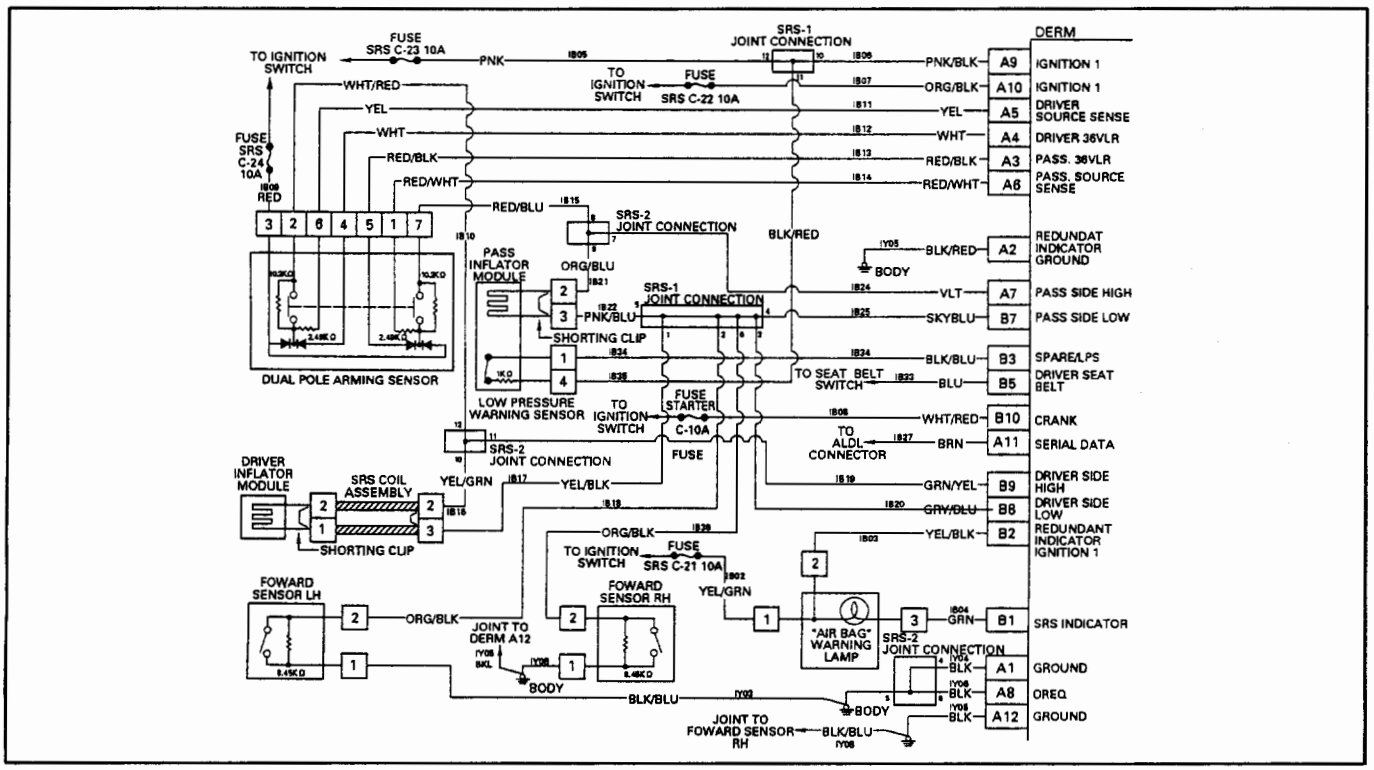

DTC 24 (PAGE 2 OF 3)

INITIATOR CIRCUIT VOLTAGE LOW

STEP	ACTION	YES	NO
9	WERE YOU SENT HERE FROM DTC 24(PAGE 1 OF 3)?	GO TO STEP10.	GO TO DTC 24(PAGE 1 OF 3).
10	IGNITION SWITCH "OFF." DISCONNECT DERM. DISCONNECT SRS DRIVER/PASSENGER LOAD TOOL. MEASURE RESISTANCE ON DERM HARNESS CONNECTOR FROM TERMINAL "B9" TO TERMINAL "A1." IS RESISTANCE 5.0Ω OR LESS?	GO TO STEP11.	CONTINUE WITH DIAGNOSIS ON NEXT PAGE.
11	DISCONNECT FORWARD LH DISCRIMINATING SENSOR. MEASURE RESISTANCE OF FORWARD LH DISCRIMINATING SENSOR FROM TERMINAL "1" TO TERMINAL "2". IS RESISTANCE LESS THAN 8.36KΩ?	GO TO STEP16.	GO TO STEP12.
12	RECONNECT FORWARD LH DISCRIMINATING SENSOR. DISCONNECT FORWARD RH DISCRIMINATING SENSOR. MEASURE RESISTANCE OF FORWARD RH DISCRIMINATING SENSOR FROM TERMINAL "1" TO TERMINAL "2". IS RESISTANCE LESS THAN 8.36KΩ?	GO TO STEP17.	GO TO STEP13.
13	RECONNECT FORWARD RH DISCRIMINATING SENSOR. DISCONNECT ENG, ROOM (FORWARD LH DISCRIMINATING SENSOR JUMPER) HARNESS CONNECTOR LOCATED NEAR THE DRIVER DASH SIDE. MEASURE RESISTANCE ON ENG, ROOM HARNESS CONNECT FROM TERMINAL "1" TO TERMINAL "2". IS RESISTANCE 5.0Ω OR LESS?	GO TO STEP18.	GO TO STEP14.
14	RECONNECT ENG, ROOM(FORWARD LH DISCRIMINATING SENSOR JUMPER) HARNESS CONNECTOR. DISCONNECT ENG. ROOM(FORWARD RH DISCRIMINATING SENSOR JUMPER) HARNESS CONNECTOR LOCATED BEHIND THE I/P COMPARTMENT DOOR ASSEMBLY. MEASURE RESISTANCE ON ENG.ROOM HARNESS CONNECTOR FROM TERMINAL "1" TO TERMINAL "2". IS RESISTANCE 5.0Ω OR LESS?	GO TO STEP19.	GO TO STEP15.
15	REPLACE SRS HARNESS.	GO TO STEP20.	
16	REPLACE FORWARD LH DISCRIMINATING SENSOR.	GO TO STEP20.	
17	REPLACE FORWARD RH DISCRIMINATING SENSOR.	GO TO STEP20.	
18	REPLACE ENG.ROOM(FORWARD LH DISCRIMINATING SENSOR JUMPER) HARNESS.	GO TO STEP20.	
19	REPLACE ENG.ROOM(FORWARD RH DISCRIMINATING SENSOR JUMPER) HARNESS.	GO TO STEP20.	
20	RECONNECT ALL SRS COMPONENTS, ENSURE ALL COMPONENTS ARE PROPERLY MOUNTED. CLEAR SRS DIAGNOSTIC TROUBLE CODE. REPEAT THE "SRS DIAGNOSTIC SYSTEM CHECK."	GO TO THE "SRS DIAGNOSTIC SYSTEM CHECK".	

DTC 24 (PAGE 3 OF 3)

INITIATOR CIRCUIT VOLTAGE LOW

CIRCUIT DESCRIPTION

During normal, non–deployment operation of the SRS, a small amount of current flows through both the driver and passenger deployment loops. The diagnostic resistors within the dual pole arming sensor and the discriminating sensors along with the resistance of the inflator modules cause voltage drops within the deployment loops. The DERM monitors the voltage at "Driver Side Low" terminal "B8" and "Passenger Side Low" terminal "B7" to detect shorts or opens within the driver deployment loop. When the measured voltage at terminal "B8" or "B7" is below a specified percentage of its respective Driver 36 VLR for 500 milliseconds DTC 24 is set.

DTC WILL SET WHEN

The voltage measured at "Driver Side Low" terminal "B8" is below a specified percentage of "Driver 36 VLR" or when the voltage measured at "Passenger Side Low" terminal "B7" is below a specified percentage of "Passenger 36 VLR" for 500 milliseconds. This test is run during the "Continuous Monitoring" test.

ACTION TAKEN

DERM turns "ON" the "AIR BAG" warning lamp and sets a diagnostic trouble code.

DTC WILL CLEAR WHEN

The voltage measured at "Driver Side Low" terminal "B8" is within a specified percentage of "Driver 36 VLR" and the voltage measured at "Passenger Side Low" terminal "B7" is within a specified percentage of "Passenger 36 VLR" for 500 milliseconds.

DTC CHART TEST DESCRIPTION

Number(s) below refer to step number(s) on the diagnostic chart.

22. This test determines whether the malfunction is a short from the high side of the passenger deployment loop to ground.

23This test determines whether the malfunction is a short from the high side of the Driver deployment loop to ground.

24. This test checks for an open in the driver deployment loop diagnostic resistor of the dual pole arming sensor.

25. This test checks for an open in the passenger deployment for an open in the passenger deployment loop diagnostic resistor of the dual pole arming sensor.

26. This test checks for high resistance in the "Driver 36 VLR" circuit.

27. This test checks for high resistance in the "Passenger 36 VLR" circuit.

28. This test checks for high side of the driver deployment loop.

29. This test checks for an open in the high side of the passenger deployment loop.

DIAGNOSTIC AIDS

Refer to DTC 24(Page 1 of 3).

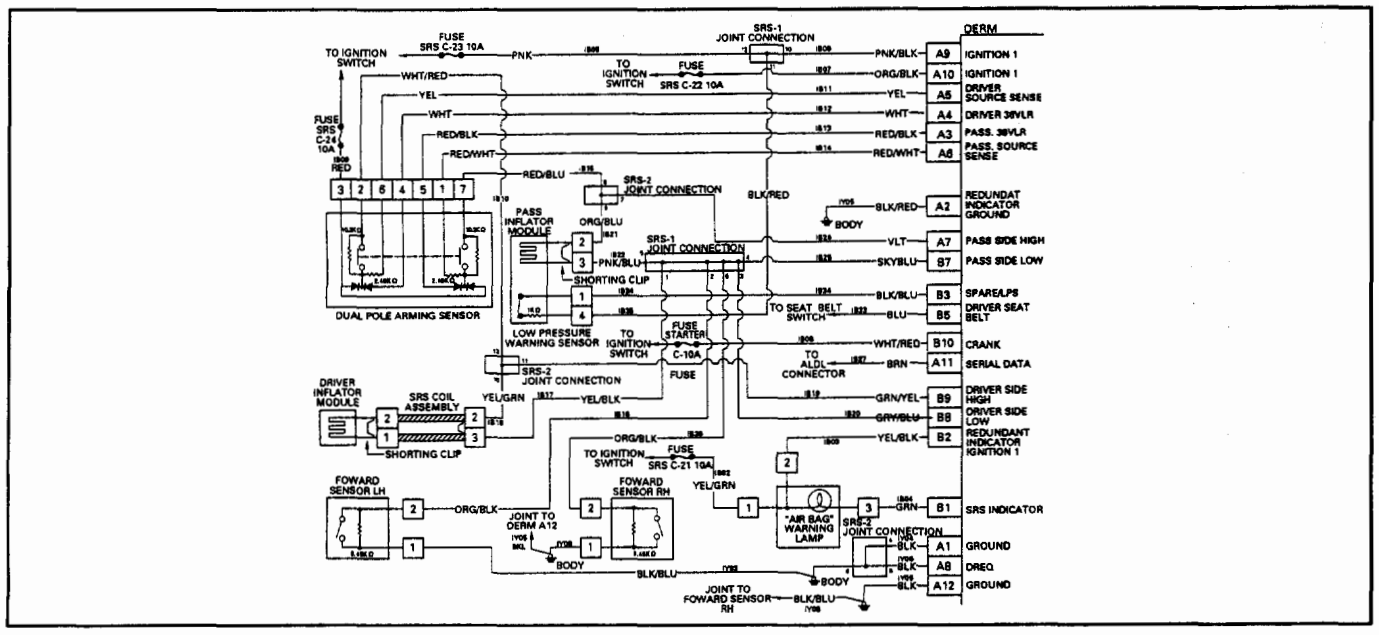

DTC 24 (PAGE 3 OF 3)

INITIATOR CIRCUIT VOLTAGE LOW

STEP	ACTION	YES	NO
21	WERE YOU SENT HERE FROM DTC 24(PAGE 2 OF 3)?	GO TO STEP22.	GO TO DTC 24(PAGE2 OF 3).
22	DISCONNECT DUAL POLE ARMING SENSOR. MEASURE RESISTANCE ON DERM HARNESS CONNECTOR FROM TERMINAL "A7" TO TERMINAL "A1"(GROUND). DOES J–39200 DISPLAY "OL"(INFINITE)?	GO TO STEP23.	GO TO STEP30.
23	MEASURE RESISTANCE ON DERM HARNESS CONNECTOR FROM TERMINAL "B9" TO TERMINAL "A1"(GROUND). DOES J–39200 DISPLAY "OL"(INFINITE)?	GO TO STEP24.	GO TO STEP30.
24	CHECK FOR PROPER CONNECTION TO THE DUAL POLE ARMING SENSOR AT TERMINAL "1", "2", "3", "4" AND "5". IF OK THEN MEASURE RESISTANCE ON DUAL POLE ARMING SENSOR CONNECTOR FROM TERMINAL "2" TO TERMINAL "6". IS RESISTANCE GREATER THAN 12.9KΩ?	GO TO STEP31.	GO TO STEP25.
25	MEASURE RESISTANCE ON DUAL POLE ARMING SENSOR CONNECTOR FROM TERMINAL "1" TO TERMINAL "7". IS RESISTANCE GREATER THAN 12.9KΩ?	GO TO STEP31.	GO TO STEP26.
26	MEASURE RESISTANCE ON DUAL POLE ARMING SENSOR CONNECTOR FROM TERMINAL "4" TO DERM HARNESS CONNECTOR TERMINAL "A4" IS RESISTANCE 5.0Ω OR LESS?	GO TO STEP27.	GO TO STEP30.
27	MEASURE RESISTANCE ON DUAL POLE ARMING SENSOR CONNECTOR FROM TERMINAL "5" TO DERM HARNESS CONNECTOR TERMINAL "A3" IS RESISTANCE 5.0Ω OR LESS?	GO TO STEP28.	GO TO STEP30.
28	MEASURE RESISTANCE ON DUAL POLE ARMING SENSOR CONNECTOR FROM TERMINAL "2" TO DERM HARNESS CONNECTOR TERMINAL "B9" IS RESISTANCE 5.0Ω OR LESS?	GO TO STEP29.	GO TO STEP30.
29	MEASURE RESISTANCE ON DUAL POLE ARMING SENSOR CONNECTOR FROM TERMINAL "7" TO DERM HARNESS CONNECTOR TERMINAL "A7" IS RESISTANCE 5.0Ω OR LESS?	GO TO CHART A.	GO TO STEP30.
30	REPLACE SRS HARNESS.	GO TO STEP 32	
31	REPLACE DUAL POLE ARMING SENSOR.	GO TO STEP 32	
32	RECONNECT ALL SRS COMPONENTS, ENSURE ALL COMPONENTS ARE PROPERLY MOUNTED. CLEAR SRS DIAGNOSTIC TROUBLE CODES. REPEAT THE "SRS DIAGNOSTIC SYSTEM CHECK."	GO TO THE "SRS DIAGNOSTIC SYSTEM CHECK".	

DTC 25 (PAGE 1 OF 2)

INITIATOR CIRCUIT SHORT TO IGNITION

CIRCUIT DESCRIPTION

During the "Initiator Assembly Resistance Test" the DERM grounds the "Driver Side Low" terminal "B8" and measures the voltage at "Driver Side Low" and "Passenger Side Low." The DERM then grounds "Passenger Side Low" terminal "B7" and again measures the voltage at "Driver Side Low" and "Passenger Side Low." For a properly operating circuit the voltage measures the voltage measurements during each of these tests will be below a specified value. When the voltages measured at both "Driver Side Low" and "Passenger Side Low" are above a specified value during both tests DTC 25 is set.

DTC WILL SET WHEN

The voltages measured at both "Driver Side Low" and "Passenger Side Low" are above a specified value while the DERM attempts to ground each of these terminals. This test is run during the "Initiator Assembly Resistance Test" and the "10 Minute Loop Test" when: 1) "higher priority faults" are detected during "Turn–ON", 2) No "higher priority faults" are detected during "continuous Monitoring" for one second, 3) No "Crank" signal present, 4) "Ignition 1" voltage is above a specified value.

ACTION TAKEN

DERM turns "ON" the "AIR BAG" warning lamp and sets a diagnostic trouble code.

DTC WILL CLEAR WHEN

The voltages measured at either "Driver Side Low" or "Passenger Side Low" is below a specified value while the DERM ground either of these terminals.

DTC CHART TEST DESCRIPTION

Number(s) below refer to step number(s) on the diagnostic chart.

2. This test determines whether the malfunction is occurring in the steering column circuitry.
3. This test determines whether the malfunction is occurring in the passenger inflator module circuitry.
4. This test for a short from the SRS COIL to +B.

DIAGNOSTIC AIDS

Refer to DTC 25(Page 2 of 2).

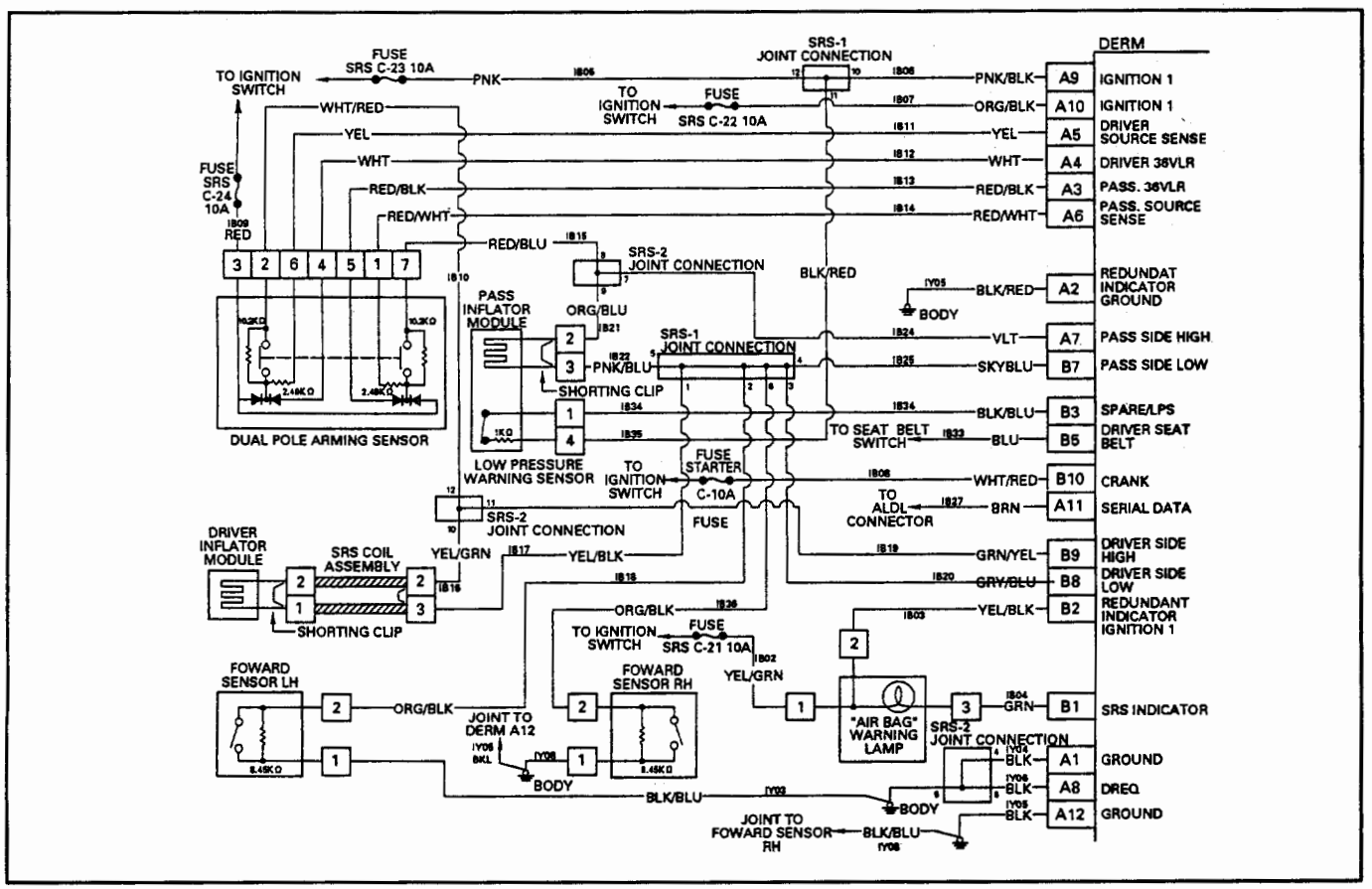

DTC 25 (PAGE 1 OF 2)

INITIATOR CIRCUIT SHORT TO IGNITION

STEP	ACTION	YES	NO
1	WAS THE "SRS DIAGNOSTIC SYSTEM CHECK" PERFORMED?	GO TO STEP2.	GO TO THE SRS DIAGNOSTIC SYSTEM CHECK."
2	WHEN MEASUREMENTS ARE REQUESTED IN THIS CHART USE J–39200 DVM WITH CORRECT TERMINAL ADAPTER FROM J–35616–A. IGNITION SWITCH "OFF." DISCONNECT DRIVER INFLATOR MODULE, YELLOW 2–WAY CONNECTOR AT THE TOP OF THE STEERING COLUMN, LEAVE PASSENGER INFLATOR MODULE CONNECTED. CONNECT SRS DRIVER/PASSENGER LOAD TOOL J41433 TO DRIVER INFLATOR MODULE HARNESS CONNECTOR. IGNITION SWITCH "ON." IS DTC 25 CURRENT?	GO TO STEP3.	GO TO STEP6.
3	IGNITION SWITCH "OFF." DISCONNECT PASSENGER INFLATOR MODULE YELLOW 4–WAY CONNECTOR LOCATED BEHIND THE I/P COMPARTMENT DOOR ASSEMBLY. CONNECT SRS DRIVER/PASSENGER INFLATOR MODULE HARNESS CONNECTOR, LEAVE DRIVER INFLATOR MODULE HARNESS CONNECTOR CONNECTED TO LOAD TOOL. IGNITION SWITCH "ON." IS DTC 25 CURRENT?	GO TO STEP4.	GO TO STEP7.
4	IGNITION SWITCH "OFF." DISCONNECT YELLOW 3–WAY SRS COIL CONNECTOR LOCATED NEAR THE BASE OF THE STEERING COLUMN. DISCONNECT DERM. MEASURE RESISTANCE FROM SRS COIL HARNESS CONNECTOR TERMINAL "2" TO DERM HARNESS CONNECTOR TERMINAL "A9". IS RESISTANCE 5.0Ω OR LESS?	GO TO STEP5.	CONTINUE WITH DIAGNOSIS ON NEXT PAGE.
5	REPLACE SRS COIL.	GO TO STEP 8	
6	IGNITION SWITCH "OFF." REPLACE INFLATOR MODULE AT THE TOP OF THE STEERING COLUMN REFER TO IN THIS SECTION 3.	GO TO STEP 8	
7	IGNITION SWITCH "OFF." REPLACE INFLATOR MODULE IN THE I/P COMPONENT.	GO TO STEP 8	
8	RECONNECT ALL SRS COMPONENTS, ENSURE ALL COMPONENTS, ENSURE ALL COMPONENTS ARE PROPERLY MOUNTED. CLEAR SRS DIAGNOSTIC TROUBLE CODES. REPEAT THE "SRS DIAGNOSTIC SYSTEM CHECK".	GO TO THE "SRS DIAGNOSTIC SYSTEM CHECK".	

DTC 25 (PAGE 2 OF 2)

INITIATOR CIRCUIT SHORT TO IGNITION

CIRCUIT DESCRIPTION

During the "Initiator Assembly Resistance Test" the DERM grounds the "Driver Side Low" terminal "B8" and measures the voltage at "Driver Side Low" and "Passenger Side Low." The DERM then grounds "Passenger Side Low" terminal "B7" and again measures the voltage at "Driver Side Low" and "Passenger Side Low." For a properly operating circuit the voltage measures the voltage measurements during each of these tests will be below a specified value. When the voltages measured at both "Driver Side Low" and "Passenger Side Low" are above a specified value during both tests DTC 25 is set.

DTC WILL SET WHEN

The voltages measured at both "Driver Side Low" and "Passenger Side Low" are above a specified value while the DERM attempts to ground each of these terminals. This test is run during the "Initiator Assembly Resistance Test" and the "10 Minute Loop Test" when: 1) "higher priority faults" are detected during "Turn–ON", 2) No "higher priority faults" are detected during "continuous Monitoring" for one second, 3) No "Crank" signal present, 4) "Ignition 1" voltage is above a specified value.

ACTION TAKEN

DERM turns "ON" the "AIR BAG" warning lamp and sets a diagnostic trouble code.

DTC WILL CLEAR WHEN

The voltages measured at either "Driver Side Low" or "Passenger Side Low" is below a specified value while the DERM ground either of these terminals.

CHART TEST DESCRIPTION

Number(s) below refer to step number(s) on the diagnostic chart.

10. This test checks for a short from the high side of the passenger deployment loop to B+.
11. This test checks for a short from the high side of the passenger deployment loop to B+.
12. This test checks for a short from the low side of the driver deployment loop or passenger deployment loop to B+.

DIAGNOSTIC AIDS

This diagnostic trouble code can only be set when the malfunction is present as the ignition switch is turned "ON." After the "Initiator Assembly Resistance Test" is completed a short to B+ in the steering column, CKT 1B19, CKT 1B20 or CKT 1B24 will cause DTC 24 to set. When a scan tool "Clear Codes" command is issued and the malfunction is still present, the DTC will not reappear for ten minutes or until the next ignition cycle.

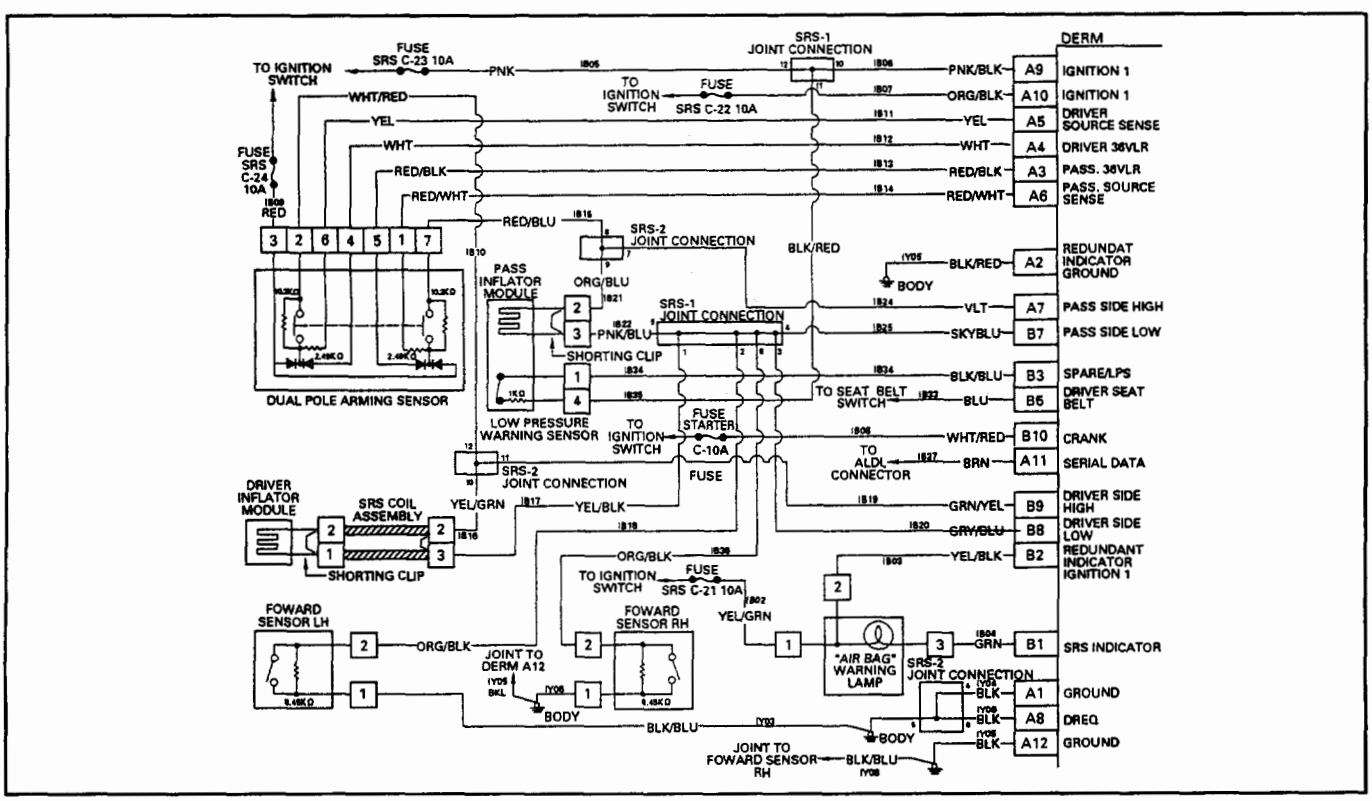

DTC 25 (PAGE 2 OF 2)

INITIATOR CIRCUIT SHORT TO IGNITION

STEP	ACTION	YES	NO
9	WERE YOU SENT HERE FROM DTC 25(PAGE 1 OF 2)?	GO TO STEP10.	GO TO DTC 25(PAGE 1 OF 2).
10	DISCONNECT DERM, DUAL POLE ARMING SENSOR AND SRS DRIVER/PASSENGER LOAD TOOL. IGNITION SWITCH "ON." MEASURE VOLTAGE ON DERM HARNESS CONNECTOR FROM TERMINAL "B9" TO TERMINAL "A1"(GROUND). IS VOLTAGE 1 VOLT OR LESS?	GO TO STEP11.	GO TO STEP13.
11	MEASURE VOLTAGE ON DERM HARNESS CONNECTOR FROM TERMINAL "A7" TO TERMINAL "A1"(GROUND). IS VOLTAGE 1 VOLT OR LESS?	GO TO STEP12.	GO TO STEP14.
12	MEASURE VOLTAGE ON DERM HARNESS CONNECTOR FROM TERMINAL "B8" TO TERMINAL "A1"(GROUND). IS VOLTAGE 1 VOLT OR LESS?	IGNITION SWITCH "OFF." GO TO CHART A.	GO TO STEP15.
13	IGNITION SWITCH "OFF." REPLACE SRS HARNESS.	GO TO STEP16	
14	IGNITION SWITCH "OFF." REPLACE SRS HARNESS.	GO TO STEP16	
15	IGNITION SWITCH "OFF." REPLACE SRS HARNESS.	GO TO STEP16	
16	RECONNECT ALL SRS COMPONENT, ENSURE ALL COMPONENTS ARE PROPERLY MOUNTED. CLEAR SIR DIAGNOSTIC TROUBLE CODES. REPEAT THE "SRS DIAGNOSTIC SYSTEM CHECK."	GO TO THE "SRS DIAGNOSTIC SYSTEM CHECK".	

DTC 26

DRIVER INITIATOR CIRCUIT OPEN

CIRCUIT DESCRIPTION

When there is an open in the driver inflator module or the SRS coil assembly the resistance between "Driver Side High" terminal "B9" and "Driver Side Low" terminal "B8" increases. This causes a larger voltage drop from the "Driver Side High" to the "Driver Side Low" across a resistor inside the DERM which connects these two terminals together. The increase in the voltage difference between "Driver Side High" and "Driver Side Low" is detected by the DERM during the "Continuous Monitoring" tests and DTC 26 is sets.

DTC WILL SET WHEN

The voltage difference between "Driver Side High" terminal "B9" and "Driver Side Low" terminal "B8" is above or equal to a specified value for 500 milliseconds.

ACTION TAKEN

DERM turns "ON" the "AIR BAG" warning lamp and sets a diagnostic trouble code.

DTC WILL TEST WHEN

The voltage difference between "Driver Side High" terminal "B9" and "Driver Side Low" terminal "B8" is below a specified value for 500 milliseconds.

DTC CHART TEST DESCRIPTION

Number(s) below refer to step number(s) on the diagnostic chart.

2. This test determines whether the malfunction is in the driver inflator module.
3. This test determines whether the malfunction is in the SRS coil assembly.
4. This test determines whether the malfunction is in the SRS HARNESS.

DIAGNOSTIC AIDS

This diagnostic trouble code will only set when there is an improper connection of either the yellow 2–way connector near the base of steering column or the yellow 2–way connector at the top of the steering column, an open SRS coil assembly or an open inflator module.

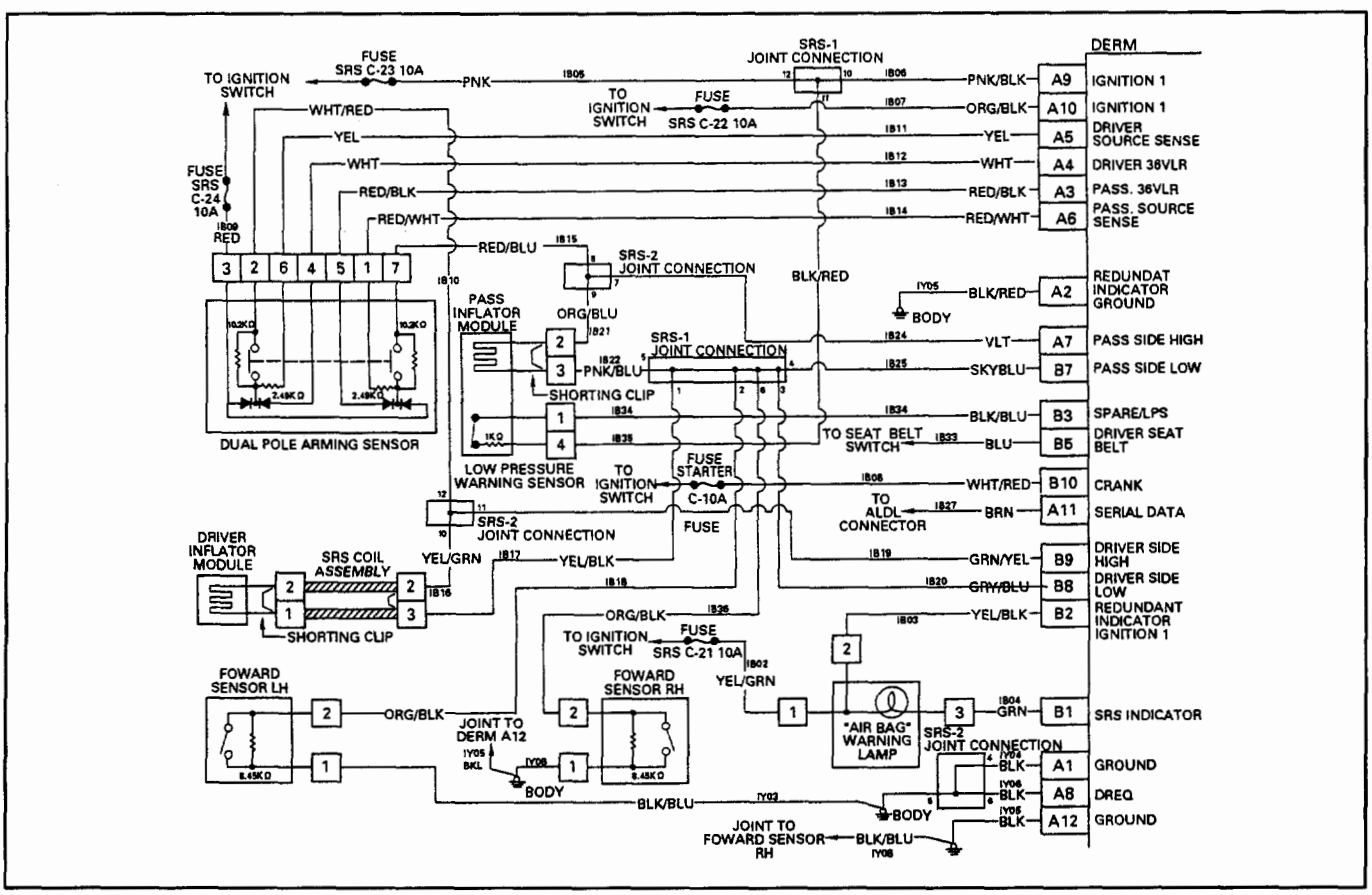

DTC 26

DRIVER INITIATOR CIRCUIT OPEN

STEP	ACTION	YES	NO
1	WAS THE "SRS DIAGNOSTIC SYSTEM CHECK" PERFORMED?	GO TO STEP2.	GO TO THE SRS DIAGNOSTIC SYSTEM CHECK."
2	WHEN MEASUREMENTS ARE REQUESTED IN THIS CHART USE J–39200 DVM WITH CORRECT TERMINAL ADAPTER FROM J–35616–A. IGNITION SWITCH "OFF." DISCONNECT DRIVER AND PASSENGER INFLATOR MODULES, YELLOW 2–WAY OR 4–WAY CONNECTORS LOCATED AT THE TOP OF THE STEERING COLUMN AND BEHIND THE I/P COMPARTMENT DOOR ASSEMBLY. CHECK FOR PROPER CONNECTION TO STEERING COLUMN CONNECTOR AT TERMINALS "1" AND "2". IF OK THEN CONNECT J–41433 SRS DRIVER/PASSENGER LOAD TOOL TO STEERING COLUMN HARNESS CONNECTOR. IGNITION SWITCH "ON." IS DTC CURRENT? (DTC 17 WILL BE CURRENT DUE TO DISCONNECTED PASSENGER INFLATOR MODULE).	GO TO STEP3.	IGNITION SWITCH "OFF." REPLACE DRIVER INFLATOR MODULE, REFER TO IN THIS SECTION 3. GO TO STEP5.
3	IGNITION SWITCH "OFF." DISCONNECT SRS DRIVER/PASSENGER LOAD TOOL. DISCONNECT SRS COIL CONNECTOR, YELLOW 3–WAY CONNECTORS LOCATED NEAR THE BASE OF THE STEERING COLUMN. MEASURE RESISTANCE ON SRS COIL CONNECTOR AT THE TOP OF THE STEERING COLUMN, FROM TERMINAL "1" TO TERMINAL "2". IS RESISTANCE 5.0Ω OR LESS?	GO TO STEP4.	IGNITION SWITCH "OFF." REPLACE SRS COIL ASSEMBLY, REFER TO IN THIS SECTION 3. GO TO STEP5.
4	DISCONNECT DERM CONNECTOR. RECONNECT SRS DRIVER/PASSENGER LOAD TOOL CONNECTOR. RECONNECT SRS COIL CONNECTOR. MEASURE RESISTANS ON DERM CONNECTOR FROM TERMINAL "B9" TO TERMINAL "B8". IS RESISTANCE 5.0Ω OR LESS?	RECONNECT ALL SRS COMPONENTS. GO TO CHART A.	REPLACE SRS HARNESS. GO TO STEP5.
5	RECONNECT ALL SRS COMPONENTS, ENSURE ALL COMPONENTS ARE PROPERLY MOUNTED. CLEAR SRS DIAGNOSTIC TROUBLE CODE. REPEAT THE "SRS DIAGNOSTIC SYSTEM CHECK."	GO TO THE "SRS DIAGNOSTIC SYSTEM CHECK".	

DTC 28

CURRENT SINK OR SOURCE FAILURE

CIRCUIT DESCRIPTION

During the "Initiator Assembly Resistance Test" the DERM grounds the "Passenger Side Low" terminal "B7" and turns "ON" the driver current source at the "Driver Side High"terminal "B9". The DERM then grounds the "Driver Side Low" terminal "B8" and turns "ON" the passenger current source at the "Passenger Side High" terminal "A7". During each of these tests the DERM monitors voltage at "Driver Side Low," "Passenger Side Low," the difference between "Driver Side High" and "Driver Side Low" and the difference between "Passenger Side High" and "Passenger Side Low." When the measured values are outside the expected range DTC 28 is set.

DTC WILL SET WHEN

The voltage measured at "Driver Side Low" or "Passenger Side Low" is below a specified value while its respective initiator resistance is in range or when the voltage measured at "Driver Side Low" or "Passenger Side Low" is above a specified value. This test is run once each ignition cycle during the "Initiator Assembly Resistance Test" when: 1) No "higher priority faults" are detected during "Turn–ON," 2) No "higher priority faults" are detected during "Continuous Monitoring" for one second, 3) No "Crank" signal present, 4) "Ignition 1" voltage is above a specified value.

ACTION TAKEN

DERM turns "ON the "AIR BAG" warning lamp and sets a diagnostic trouble code.

DTC WILL CLEAR WHEN

The ignition switch is turned "OFF."

DTC CHART TEST DESCRIPTION

Number(s) below refer to step number(s) on the diagnostic chart.

2. This test checks whether malfunction is in the wiring harness. The wiring harness malfunction would be a high resistance rather than an open. An open would set a different diagnostic trouble code.

3. This test determines whether the malfunction is in the wiring harness. The wiring harness malfunction would be a high resistance rather than an open. An open would set a different diagnostic trouble code

DIAGNOSTIC AIDS

An intermittent condition is likely to be caused by a poor wire to terminal connection in CKT 1B18C or CKT 1B36. When a scan tool "Clear Codes" command is issued and the malfunction is still present, the DTC will not reappear for ten minutes or until the next ignition cycle.

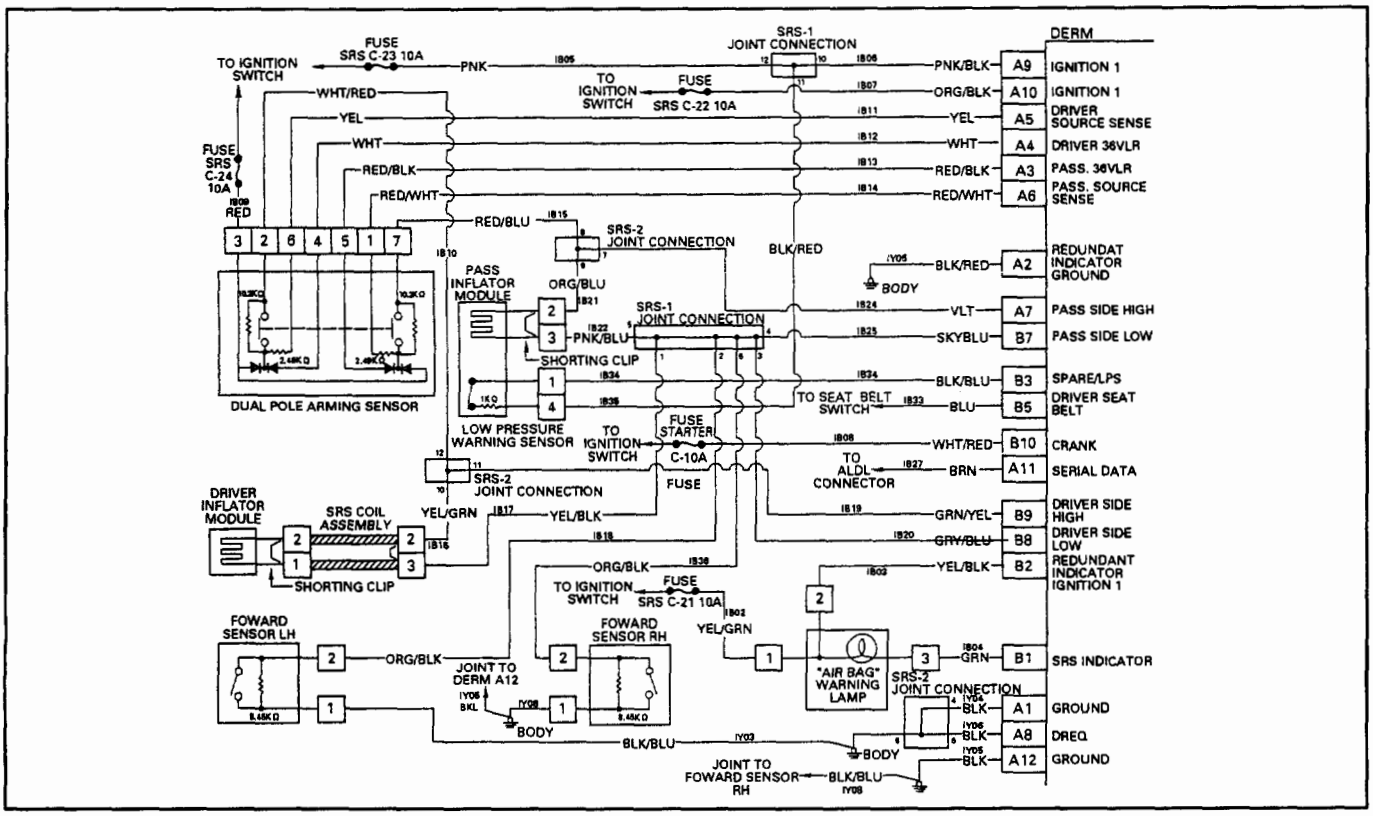

DTC 28

CURRENT SINK OR SOURCE FAILURE

STEP	ACTION	YES	NO
1	WAS THE "SRS DIAGNOSTIC SYSTEM CHECK" PERFORMED?	GO TO STEP2.	GO TO THE "SRS DIAGNOSTIC SYSTEM CHECK."
2	WHEN MEASUREMENTS ARE REQUESTED IN THIS CHART USE J–39200 DVM WITH CORRECT TERMINAL ADAPTER FROM J–35616–A. IGNITION SWITCH "OFF." DISCONNECT DRIVER AND PASSENGER INFLATOR MODULES,YELLOW2–WAY OR 4–WAY CONNECTORS LOCATED AT THE TOP OF THE STEERING COLUMN AND BEHIND THE I/P COMPARTMENT DOOR ASSEMBLY. DISCONNECT DERM CONNECTOR. MEASURE RESISTANCE FROM DERM HARNESS CONNECTOR TERMINAL "B8" TO STEERING COLUMN HARNESS CONNECTOR TERMINAL "2". IS RESISTANCE 5.0ΩOR LESS?	GO TO STEP3.	GO TO STEP4.
3	MEASURE RESISTANCE DERM HARNESS CONNECTOR TERMINAL "B8" TO PASSENGER INFLATOR MODULE HARNESS CONNECTOR TERMINAL "2". IS RESISTANCE5.0Ω OR LESS?	GO TO CHART A.	GO TO STEP4.
4	REPLACE SRS HARNESS.	GO TO STEP5.	
5	RECONNECT ALL SRS COMPONENTS, ENSURE ALL COMPONENTS ARE PROPERTY MOUNTED. CLEAR SRS DIAGNOSTIC TROUBLE CODES. REPEAT THE "SRS DIAGNOSTIC SYSTEM CHECK."	GO TO THE "SRS DIAGNOSTIC SYSTEM CHECK".	

DTC31

DRIVER LOOP ENERGY RESERVE FEED OPEN

CIRCUIT DESCRIPTION

During the "Continuous Monitoring" tests the DERM monitors the voltage at "Driver Source Sense" terminal "A5." When the circuit is operating normally the measured voltage will be slightly less than "Driver 36 VLR." If the "Driver 36 VLR" circuit opens the voltage measured at "Driver Source Sense" will decrease to slightly less than "Ignition 1" voltage. When the voltage measured at "Driver Source Sense" is within a specified range of "Ignition 1" for 500 milliseconds DTC 31 is set.

DTC WILL SET WHEN

The voltage measured at "Driver Source Sense" terminal "A5" is within a specified range of "Ignition 1" for 500 milliseconds. This test is run every 100 milliseconds during "Continuous Monitoring" tests.

ACTION TAKEN

DERM turns "ON" the "AIR BAG" warning lamps and sets a diagnostic trouble code.

DTC WILL CLEAR WHEN

The voltage measured at "Driver Source Sense" terminal "A5" is outside the specified range of "Ignition 1" which sets the diagnostic trouble code, for 500 milliseconds.

DTC CHART TEST DESCRIPTION

Number(s) below refer to step number(s) on the diagnostic chart.

2. This test checks for an open in the "Driver 36VLR" circuit.
3. This test checks for a high resistance, but not an open, in the "Driver Source Sense" circuit.
4. This test checks for a short from the "Driver Source Sense" circuit to B+.
5. This test determines whether the malfunction is due to the dual pole arming sensor.

DIAGNOSTIC AIDS

An intermittent condition is likely to be caused by a poor connection at arming sensor terminal "4" or "6", poor connection at DERM terminal "A4" or "A5", an open in CKT IB11 or CKT IB12, or an open inside the dual pole arming sensor.

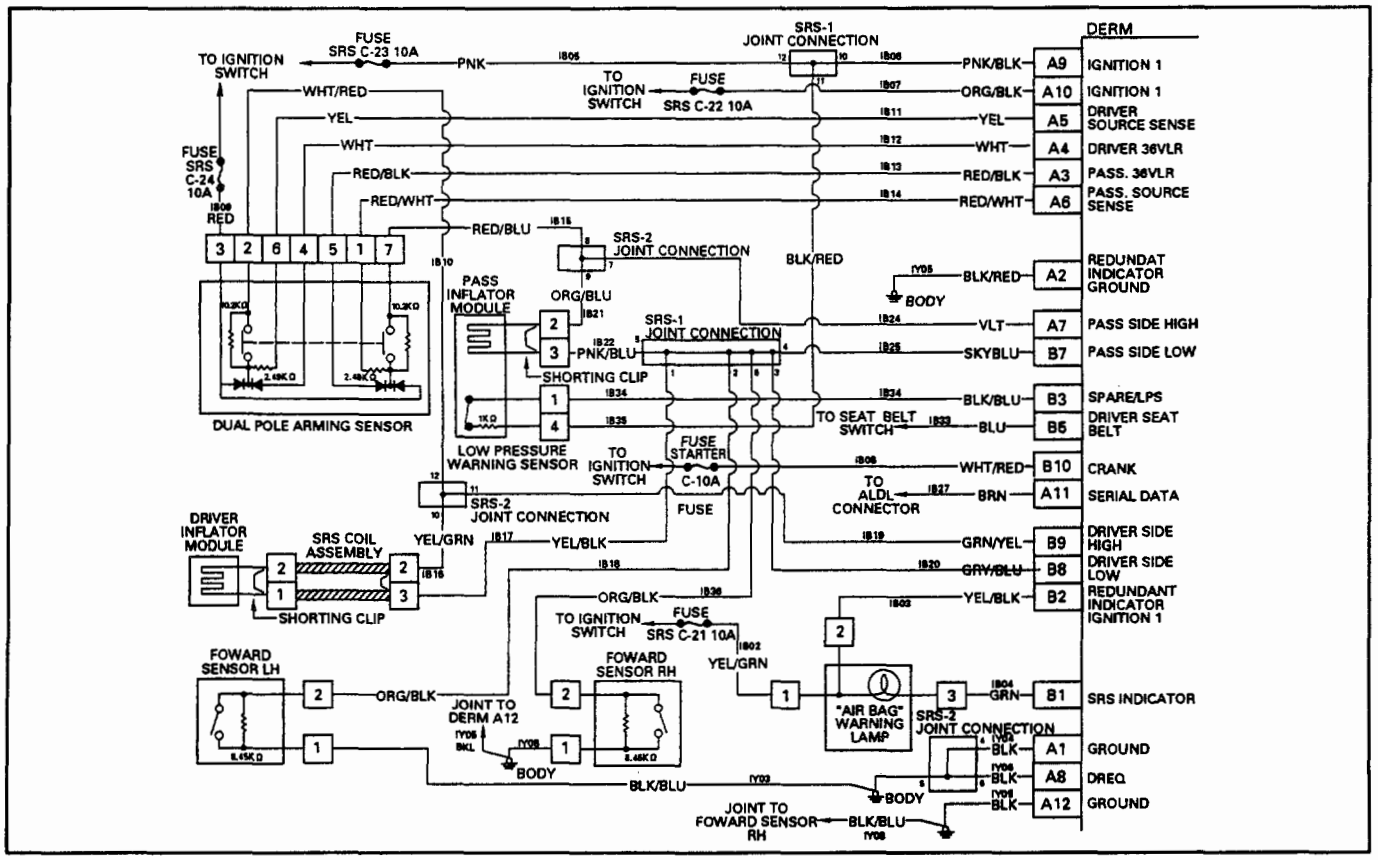

DTC 31

DRIVER LOOP ENERGY RESERVE FEED OPEN

STEP	ACTION	YES	NO
1	WAS THE "SRS DIAGNOSTIC SYSTEM CHECK" PERFORMED?	GO TO STEP2.	GO TO THE "SRS DIAGNOSTIC SYSTEM CHECK."
2	WHEN MEASUREMENTS ARE REQUESTED IN THIS CHART USE J–39200 DVM WITH CORRECT TERMINAL ADAPTER FROM J–35616–A. IGNITION SWITCH "OFF." DISCONNECT DRIVER AND PASSENGER INFLATOR MODULES, YELLOW 2–WAY OR 4–WAY CONNECTORS LOCATED AT THE TOP OF THE STEERING COLUMN AND BEHIND THE I/P COMPARTMENT DOOR ASSEMBLY. DISCONNECT DUAL POLE ARMING SENSOR. CHECK FOR PROPER CONNECTION TO DUAL POLE ARMING SENSOR AT TERMINALS "4" AND "6". IF OK, THEN DISCONNECT DERM. CHECK FOR PROPER CONNECTION TO DERM AT TERMINALS "A4" AND "5". IF OK THEN MEASURE RESISTANCE FROM DERM HARNESS CONNECTOR TERMINAL "A4" TO DUAL POLE ARMING SENSOR HARNESS CONNECTOR TERMINAL "4". IS RESISTANCE 5.0Ω OR LESS?	GO TO STEP3.	GO TO STEP6.
3	MEASURE RESISTANCE FROM DERM HARNESS CONNECTOR TERMINAL "A5" TO DUAL POLE ARMING SENSOR HARNESS CONNECTOR TERMINAL "6" IS RESISTANCE 5.0 Ω OR LESS?	GO TO STEP4.	GO TO STEP6.
4	IGNITION SWITCH "ON". MEASURE VOLTAGE ON DERM HARNESS CONNECTOR FROM TERMINAL "A5" TO TERMINAL "A12" (GROUND). IS VOLTAGE 1 VOLT OR LESS?	GO TO STEP5.	IGNITION SWITCH "OFF" GO TO STEP6.
5	IGNITION SWITCH "OFF." RECONNECT DERM AND DUAL POLE ARMING SENSOR. IGNITION SWITCH "ON." USING TECH 1 DATA LIST FUNCTION, SELECT "DRIVER SOURCE." IS VOLTAGE GREATER THAN 31 VOLTS?	IGNITION SWITCH "OFF." GO TO CHART A.	GO TO STEP9.
6	REPLACE SRS HARNESS.	GO TO STEP8.	
7	IGNITION SWITCH "OFF." REPLACE DUAL POLE ARMING SENSOR.	GO TO STEP8.	
8	RECONNECT ALL SRS COMPONENTS, ENSURE ALL COMPONENTS ARE PROPERLY MOUNTED. CLEAR SRS DIAGNOSTIC TROUBLE CODES. REPEAT THE "SRS DIAGNOSTIC SYSTEM CHECK."	GO TO THE "SRS DIAGNOSTIC SYSTEM CHECK".	

DTC 34

DUAL POLE ARMING SENSOR IGNITION FEED OPEN

CIRCUIT DESCRIPTION

During the "turn–ON" tests, performed at the beginning of each ignition cycle, the DERM delays the charging of the "Driver 36 VLR" and "Passenger 36 VLR" power supplies. While the delay is active the DERM measures the voltage at the "Driver VLR" terminal "A4" , "Passenger 36 VLR" terminal "A3", "Driver Source sense" terminal "A5", and "Passenger Source Sense" terminal "A6". When the voltage measured at the two "36 VLR" power supplies indicates they are in a discharged state and the voltage measured at each "Source Sense" terminal is a specified amount below "Ignition 1" voltage DTC34 is set.

DTC WILL SET WHEN

With both "36 VLR" power supplies in a discharged state, the voltage measured at "Driver Source Sense" terminal "A5" and "Passenger Source Sense" terminal "A6" are simultaneously a specified amount below "Ignition 1" voltage and no "higher priority faults" are detected. This test is run once each ignition cycle during the "Turn–ON" tests while the "36 VLR Delay" is active.

ACTION TAKEN

DERM turns "ON" the AIR BAG" warning lamp and sets a diagnostic trouble code.

DTC WILL CLEAR WHEN

With both "36 VLR" power supplies in a discharged state, the voltage measured at specified range of "Ignition 1" voltage.

When neither the failure nor clear conditions are met, the state of the diagnostic trouble code from the previous ignition cycle is used.

DTC CHART TEST DESCRIPTION

Number(s) below refer to step number(s) on the diagnostic chart.

2. This test checks for an open in the "Ignition 1" circuit between the splice and the dual pole arming sensor.
3. This test determines whether the malfunction is internal to the dual pole arming sensor.
4. This test checks for an open in fuse C–24.
5. This test checks for a short from CKT IB09 to ground.

DIAGNOSTIC AIDS

An intermittent condition is likely to be caused by an improper connection at dual pole arming sensor terminal "3" or "6" and "7" improper connection at DERM terminal "A5" or "A6", open ignition feed to the dual pole arming sensor, open "Driver Source Sense" circuit and open "Passenger Source Sense" circuit, or malfunctioning dual pole arming sensor ignition diodes. The test for this diagnostic trouble code is only run while the "AIR BAG"warning lamp is performing the bulb check. When a scan tool "Clear Code" command is issued and the malfunction is still present, the DTC will not reappear until the ignition switch is turned "OFF" for at least two minutes with the entire SRS connected and then the ignition switch is turned "ON."

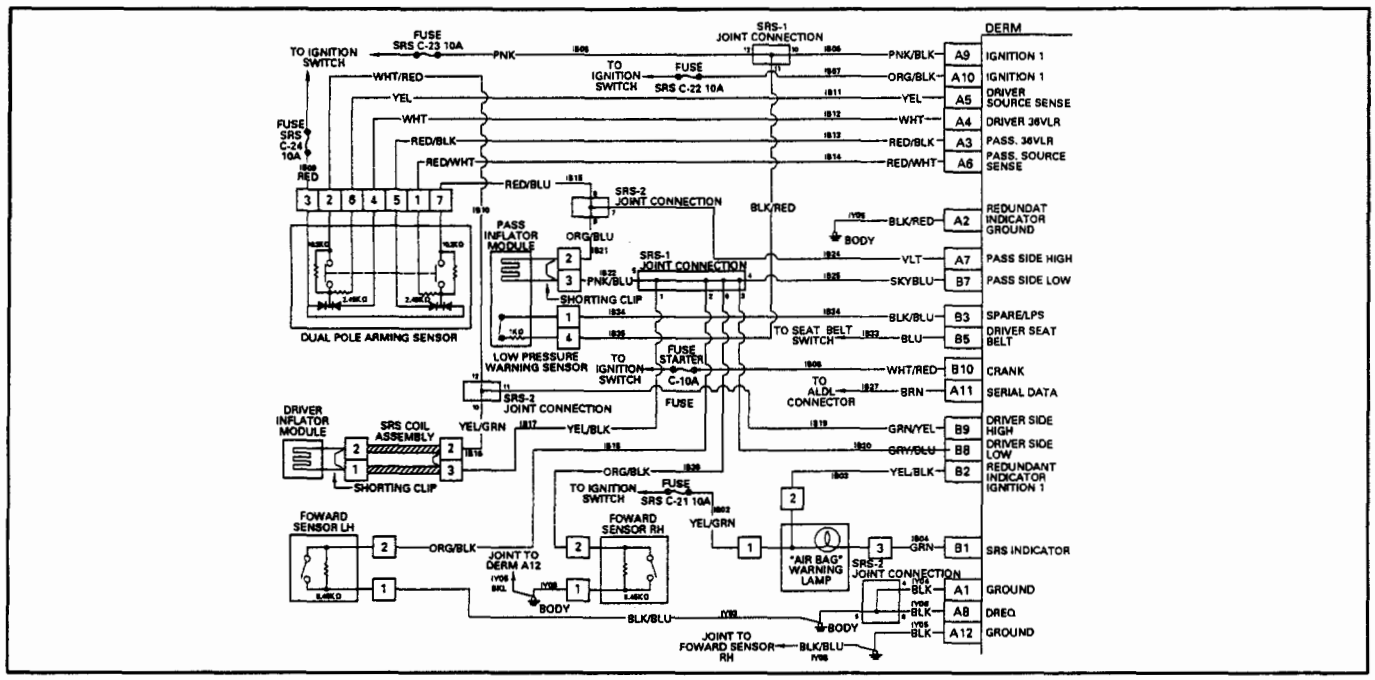

DTC 34

DUAL POLE ARMING SENSOR IGNITION FEED OPEN

STEP	ACTION	YES	NO
1	WAS THE "SRS DIAGNOSTIC SYSTEM CHECK" PERFORMED?	GO TO STEP2.	GO TO THE "SRS DIAGNOSTIC SYSTEM CHECK."
2	WHEN MEASUREMENTS ARE REQUESTED IN THIS CHART USE J–39200 DVM WITH CORRECT TERMINAL ADAPTER FROM J–35616–A. IGNITION SWITCH "OFF." DISCONNECT DRIVER AND PASSENGER INFLATOR MODULES, YELLOW 2–WAY OR 4–WAY CONNECTORS LOCATED AT THE TOP OF THE STEERING COLUMN AND BEHIND THE I/P COMPARTMENT DOOR ASSEMBLY. DISCONNECT DUAL POLE ARMING SENSOR. CHECK FOR PROPER CONNECTION TO DUAL POLE ARMING SENSOR AT TERMINALS "3". IF OK THEN DISCONNECT DERM. MEASURE RESISTANCE FROM DERM HARNESS CONNECTOR TERMINAL "A9" TO DUAL POLE ARMING SENSOR HARNESS CONNECTOR TERMINAL "3". IS RESISTANCE 5.0Ω OR LESS?	GO TO STEP3.	GO TO STEP4.
3	RECONNECT DUAL POLE ARMING SENSOR. IGNITION SWITCH "ON." MEASURE VOLTAGE ON DERM HARNESS CONNECTOR FROM TERMINAL "A5" TO TERMINAL "A1"(GROUND). IS VOLTAGE 1 VOLT OR LESS?	GO TO STEP5.	IGNITION SWITCH "OFF." GO TO CHART A.
4	CHECK C–24 FUSE. IS IT OPEN?	GO TO STEP6.	GO TO STEP7.
5	IGNITION SWITCH "OFF." REPLACE DUAL POLE ARMING SENSOR.	GO TO STEP8.	
6	REPLACE C–24 FUSE.(10A) MEASURE RESISTANCE FROM DERM HARNESS CONNECTOR TERMINAL "A1" TO DUAL POLE ARMING SENSOR HARNESS CONNECTOR TERMINAL "3". IS RESISTANCE 5.0Ω OR LESS?	GO TO STEP7.	GO TO STEP8.
7	REPLACE SRS HARNESS	GO TO STEP8.	
8	RECONNECT ALL SRS COMPONENTS, ENSURE ALL COMPONENTS ARE PROPERLY MOUNTED. CLEAR SRS DIAGNOSTIC TROUBLE CODES. REPEAT THE "SRS DIAGNOSTIC SYSTEM CHECK."	GO TO THE "SRS DIAGNOSTIC SYSTEM CHECK".	

DTC 35

DISCRIMINATING SENSOR OPEN OR MISSING

CIRCUIT DESCRIPTION

During normal, non–deployment operation of SRS a small amount of current flows through both the driver and passenger deployment loops.The diagnostic resistors within the dual pole arming sensor and the discriminating sensors along with the resistance of the inflator modules cause voltage drops within the deployment loops.The DERM monitors the voltage at "Driver Side Low" terminal "B8" and "Passenger Side Low" terminal "B7" to detect shorts or opens within the deployment loops.When the measured voltage at either terminal is within a specified percentage of its respective "36 VLR" power supply voltage for 500 milliseconds DTC 35 is set.

DTC WILL SET WHEN

The voltage measured at "Driver Side Low" terminal "B8" and "Passenger Side Low" terminal "B7" is within a specified percentage of its respective "36 VLR"a power supply voltage for 500 milliseconds. This test is run every 100 milliseconds during the "Continuous Monitoring" tests.

ACTION TAKEN

DERM turns "ON" the "AIR BAG" warning lamp and sets a diagnostic trouble code.

DTC WILL CLEAR WHEN

The voltages measured at "Driver Side Low" terminal "B8" and "Passenger Side Low" terminal "B7" are both above or below the respective "36 VLR" power supply voltage which sets DTC 35.

DTC CHART TEST DESCRIPTION

Number(s) below refer to step number(s) on the diagnostic chart.

2. This test checks for an open inside the forward LH discriminating sensor.
3. This test checks for an open inside the Eng·ROOM(forward LH discriminating sensor Jumper) HARNESS.
4. This test checks for an open inside the forward RH discriminating sensor.
5. This test checks for an open inside the Engine room (forward RH Discriminating Sensor Jumper)

DIAGNOSTIC AIDS

An intermittent condition is likely to be an improper connection at any of the discriminating sensor terminals, an open in either ground feed to the discriminating sensors, an open discriminating sensor interconnect ciircuit, increased resistance of any discriminating sensor or decreased resistance of the dual pole arming sensor.

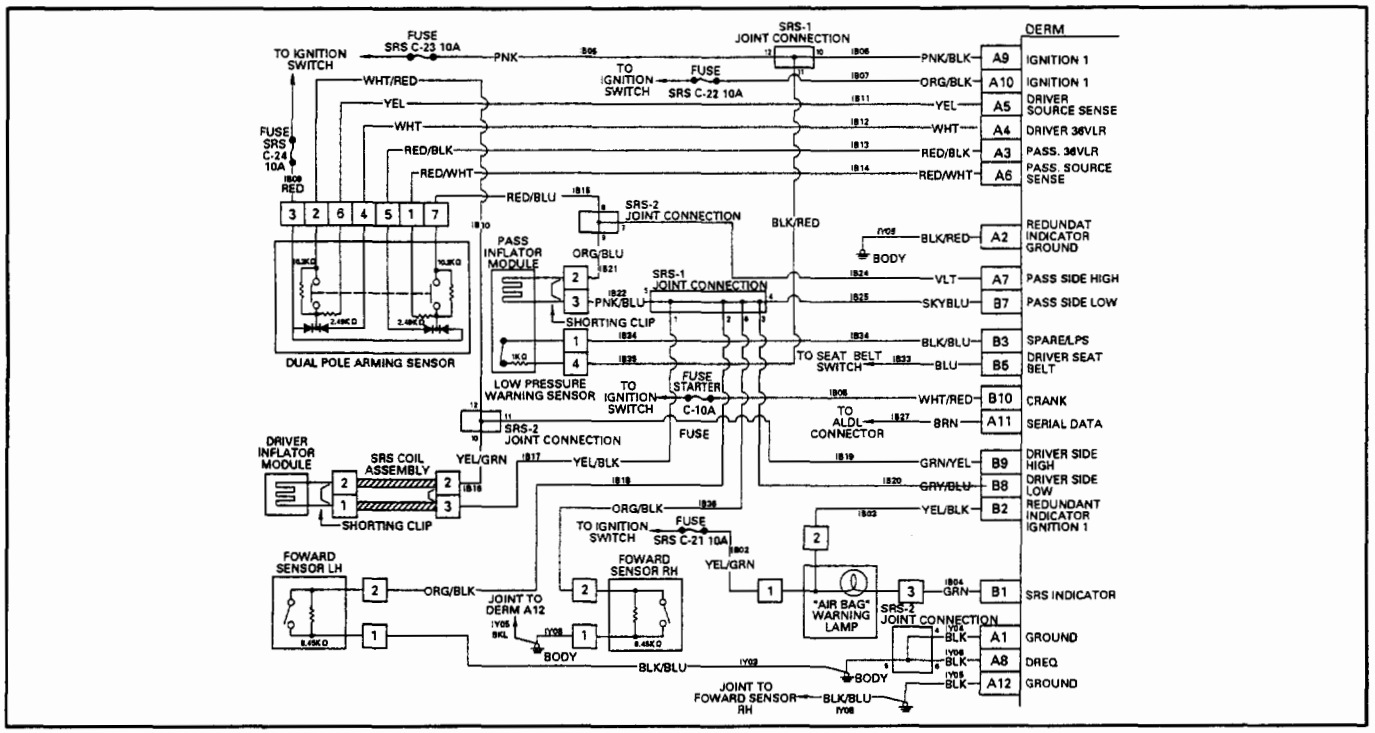

DTC 35

DISCRIMINATING SENSOR OPEN OR MISSING

STEP	ACTION	YES	NO
1	WAS THE "SRS DIAGNOSTIC SYSTEM CHECK" PERFORMED?	GO TO STEP2.	GO TO THE "SRS DIAGNOSTIC SYSTEM CHECK."
2	WHEN MEASUREMENTS ARE REQUESTED IN THIS CHART USE J-39200 DVM WITH CORRECT TERMINAL ADAPTER FROM J-35616-A. DISCONNECT DRIVER AND PASSENGER INFLATOR MODULES, YELLOW 2-WAY OR 4-WAY CONNECTORS LOCATED AT THE TOP OF THE STEERING COLUMN AND BEHIND THE I/P COMPONENT DOOR ASSEMBLY. DISCONNECT FORWARD LH DISCRIMINATING SENSOR. CHECK FOR PROPER CONNECTION TO FORWARD LH DISCRIMINATING SENSOR AT TERMINALS "1" AND "2". IF OK THEN MEASURE RESISTANCE ON FORWARD DISCRIMINATING SENSOR FROM TERMINAL "1" TO TERMINAL "2". IS RESISTANCE LESS THAN 8.54KΩ?	GO TO STEP3.	GO TO STEP7.
3	RECONNECT FORWARD LH DISCRIMINATING SENSOR. DISCONNECT ENG·ROOM(FORWARD LH DISCRIMINATING SENSOR JUMPER) CHECK FOR PROPER CONNECTION TO ENGINE ROOM (FORWARD LH DISCRIMINATING SENSOR JUMPER) HARNESS CONNECTOR AT TERMINAL "1" AND "2". IF OK THEN. MEASURE RESISTANCE OH ENG·ROOM FORWARD LH DISCRIMINATING SENSOR JUMPER)HARNESS CONNECTOR FROM TERMINAL "1" TO TERMINAL "2". IS RESISTANCE LESS THAN 8.54Ω?	GO TO STEP4.	GO TO STEP8.
4	RECONNECT ENGINE ROOM (FORWARD LH DISCRININATING SENSOR JUMPER) HARNESS CONNECTOR. DISCONNECT FORWARD RH DISCRIMINATING SENSOR. CHECK FOR POWER CONNECTION TO FORWARD RH DISCRIMINATING SENSOR AT TERMINALS "1" AND TERMINAL "2". IF OK THEN MEASURE RESISTANCE ON FORWARD RH DISCRIMINATING SENSOR FROM TERMINAL "1" TO TERMINAL "2". IS RESISTANCE LESS THAN 8.54Ω?	GO TO STEP5.	GO TO STEP9.
5	RECONNECT FORWARD RH DISCRIMINATING SENSOR. DISCONNECT ENGINE ROOM (FORWARD RH DISCRIMINATING SENSOR JUMPER) CHECK FOR PROPER CONNECTION TO ENGINE ROOM (FORWARD RH DISCRIMINATING SENSOR JUMPER) HARNESS CONNECTOR AT TERMINALS "1" AND "2". IF OK THEN. MEASURE RESISTANCE ON ENG·ROOM(FORWARD RH DISCRIMINATING SENSOR JUMPER) HARNESS CONNECTOR FROM TERMINAL "1" TO TERMINAL "2". IS RESISTANCE LESS THAN 8.54Ω?	GO TO STEP6.	GO TO STEP10.
6	REPLACE SRS HARNESS.	GO TO STEP11.	
7	REPLACE FORWARD LH DISCRIMINATING SENSOR.	GO TO STEP11.	
8	REPLACE ENG.ROOM(FORWARD LH DISCRIMINATING SENSOR JUMPER) HARNESS.	GO TO STEP11.	
9	REPLACE FORWARD RH DISCRIMINATING SENSOR.	GO TO STEP11.	
10	REPLACE ENG·ROOM(FORWARD RH DISCRIMINATING SENSOR JUMPER) HARNESS.	GO TO STEP11.	
11	RECONNECT ALL SRS COMPONENTS ENSURE ALL COMPONENTS ARE PROPERLY MOUNTED. CLEAR SRS DIAGNOSTIC TROUBLE CODES. REPEAT THE "SRS DIAGNOSTIC SYSTEM CHECK."	GO TO THE "SRS DIAGNOSTIC SYSTEM CHECK"	

DTC 36

PASSENGER LOOP ENERGY RESERVE FEED OPEN

CIRCUIT DESCRIPTION

During the "Continuous Monitoring" tests the DERM monitors the voltage at "Passenger Source Sense" terminal "A6". When the circuit is operating normally the measured voltage will be slightly less than "Passenger 36 VLR." If the "Passenger 36 VLR" circuit opens the voltage measured at "Passenger Source Sense" will decrease to slightly less than "Ignition 1" voltage. When the voltage measured at "Passenger Source Sense" is within a specified range of "Ignition 1" for 500 milliseconds DTC 36 is set.

DTC WILL SET WHEN

The voltage measured at "Passenger Source Sense" terminal "A6" is within a specified range of "Ignition 1" for 500 milliseconds. This test is run every 100 milliseconds during "Continuous Monitoring" tests.

ACTION TAKEN

DERM turns "ON" the "AIR BAG" warning lamp and sets diagnostic trouble code.

DTC WILL CLEAR WHEN

The voltage measured at "Passenger Source Sense" terminal "A6" is outside the specified range of "Ignition 1" which sets the diagnostic trouble code, for 500 milliseconds.

DTC CHART TEST DESCRIPTION

Number(s) below refer to step number(s) on the diagnostic chart.

2. This test checks for an open in the "Passenger 36 VLR" circuit.
3. This test determines whether the malfunction is due to high resistance in the "Passenger Source Sense" circuit.
4. This test checks for a short from the "Passenger Source Sense" circuit to B+.
5. This test determines whether the malfunction is due to a malfunction within the dual pole arming sensor.

DIAGNOSTIC AIDS

An intermittent condition is likely to be caused by a poor connection at dual pole arming sensor terminal "1" or "5", poor connection at DERM terminal "A3" or "A6", an open in CKT IB13 or CKT IB14 or an open inside the dual pole arming sensor.

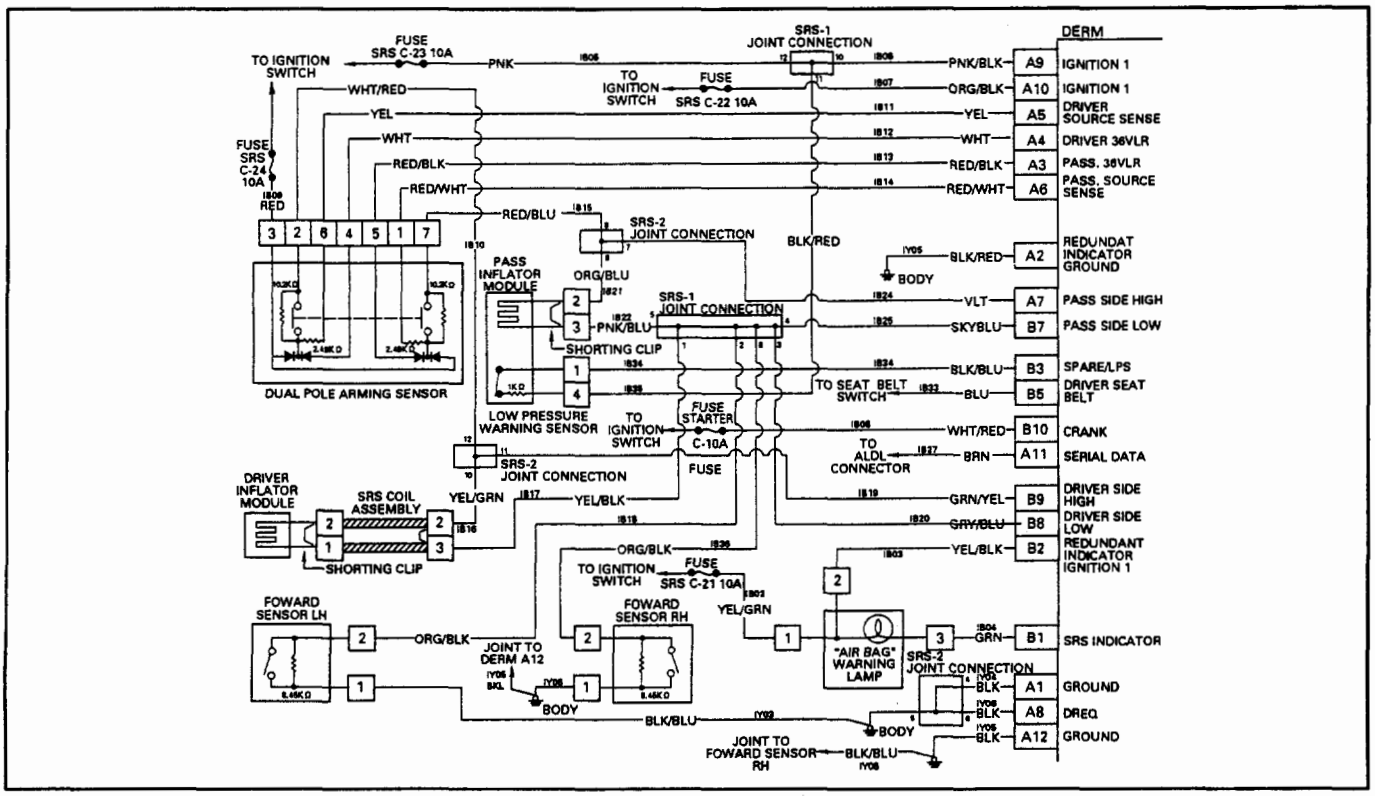

DTC 36

PASSENGER LOOP ENERGY RESERVE FEED OPEN

STEP	ACTION	YES	NO
1	WAS THE "SRS DIAGNOSTIC SYSTEM CHECK" PERFORMED?	GO TO STEP2.	GO TO THE "SRS DIAGNOSTIC SYSTEM CHECK."
2	WHEN MEASUREMENTS ARE REQUESTED IN THIS CHART USE J–39200 DVM WITH CORRECT TERMINAL ADAPTER FROM J–35616–A. IGNITION SWITCH "OFF." DISCONNECT DRIVER AND PASSENGER INFLATOR MODULES, YELLOW 2–WAY OR 4–WAY CONNECTORS LOCATED AT THE TOP OF THE STEERING COLUMN AND BEHIND THE I/P COMPONENT DOOR ASSEMBLY. DISCONNECT DUAL POLE ARMING SENSOR. CHECK FOR PROPER CONNECTION TO DUAL POLE ARMING SENSOR AT TERMINALS "1" AND "5". IF OK THEN DISCONNECTION DERM. CHECK FOR PROPER CONNECTION TO DERM AT TERMINALS "A3" AND "A6". IF OK THEN MEASURE RESISTANCE FROM DERM HARNESS CONNECTOR TERMINAL "A3" TO DUAL POLE ARMING SENSOR HARNESS CONNECTOR TERMINAL "5". IS RESISTANCE 5.0Ω OR LESS?	GO TO STEP3.	GO TO STEP6.
3	MEASURE RESISTANCE FROM DERM HARNESS CONNECTOR TERMINAL "A6" TO DUAL POLE ARMING SENSOR HARNESS CONNECTOR TERMINAL"1". IS RESISTANCE 5.0Ω OR LESS?	GO TO STEP4.	GO TO STEP6.
4	IGNITION SWITCH "ON." MEASURE VOLTAGE ON DERM HARNESS CONNECTOR FROM TERMINAL "A6" TO TERMINAL "A1"(GROUND). IS VOLTAGE 1 VOLT OR LESS?	GO TO STEP5.	IGNITION SWITCH "OFF." GO TO STEP6.
5	IGNITION SWITCH "OFF." RECONNECT DERM AND DUAL POLE ARMING SENSOR. IGNITION SWITCH "ON." USING TECH 1 DATA LIST FUNCTION, SELECT "PASS.SOURCE." IS VOLTAGE GREATER THAN 31 VOLTS?	IGNITION SWITCH "OFF." GO TO CHART A.	GO TO STEP7.
6	REPLACE SRS HARNESS.	GO TO STEP8.	
7	IGNITION SWITCH "OFF." REPLACE DUAL POLE ARMING SENSOR.	GO TO STEP8.	
8	RECONNECT ALL SRS COMPONENTS, ENSURE ALL COMPONENTS ARE PROPERLY MOUNTED. CLEAR SRS DIAGNOSTIC TROUBLE CODES. REPEAT THE "SRS DIAGNOSTIC SYSTEM CHECK."	GO TO THE "SRS DIAGNOSTIC SYSTEM CHECK".	

DTC 37

HYBRID INFLATOR LOW PRESSURE

CIRCUIT DESCRIPTION

During normal "Ignition 1" voltage is applied from the "C–23" fuse trough passenger low peraaaure warning sensor to DERM st "LPS" terminal "B3". When the pressure in the gas cylinder within the passenger inflator module is operating normally the measured voltage will be the same voltage as "Ignition 1" voltage. If the passenger low pressure warning sensor circuit opens or short to ground the voltage measured st "LPS" will decrease to near ground voltage. When the voltage measured at "LPS" is outside the specified renge DTC 37 is set.

DTC WILL SET WHEN

The voltage measured at "LPS" terminal "B3" is outside the specified renge. This test is run every 100 milliseconds during "Continuous Montoring" tests.

ACTION TAKEN

DERM turns "ON" the "AIR BAG" warning lamp and sets diagnostic trouble code.

DTC WILL CLEAR WHEN

The voltage measured at "LPS" terminal "B3" is within a specified rande which doesn't the diagnostic trouble code, svery 100 milliseconds.

DTC CHART TEST DESCRIPTION

Number(s) below refer to step number(s) on the diagnostic chart.

2. This test determines whether the malfunction is due to high resistance in the "Passenger Low Pressure Warning Sensor."
3. This test checks for an open onside the "LPS" circuit.
4. This test checks for a short from the "LPS" cirsuit to ground.

DIAGNOSTIC AIDS

An intermittent condition is likely to be caused by a poor connection Passenger Inflator Module terminal "1" or "4" poor connection at DERM terminal "B3", an open in CKT IB34 or CKT IB34 or an open inside the Passenger Inflator Module.

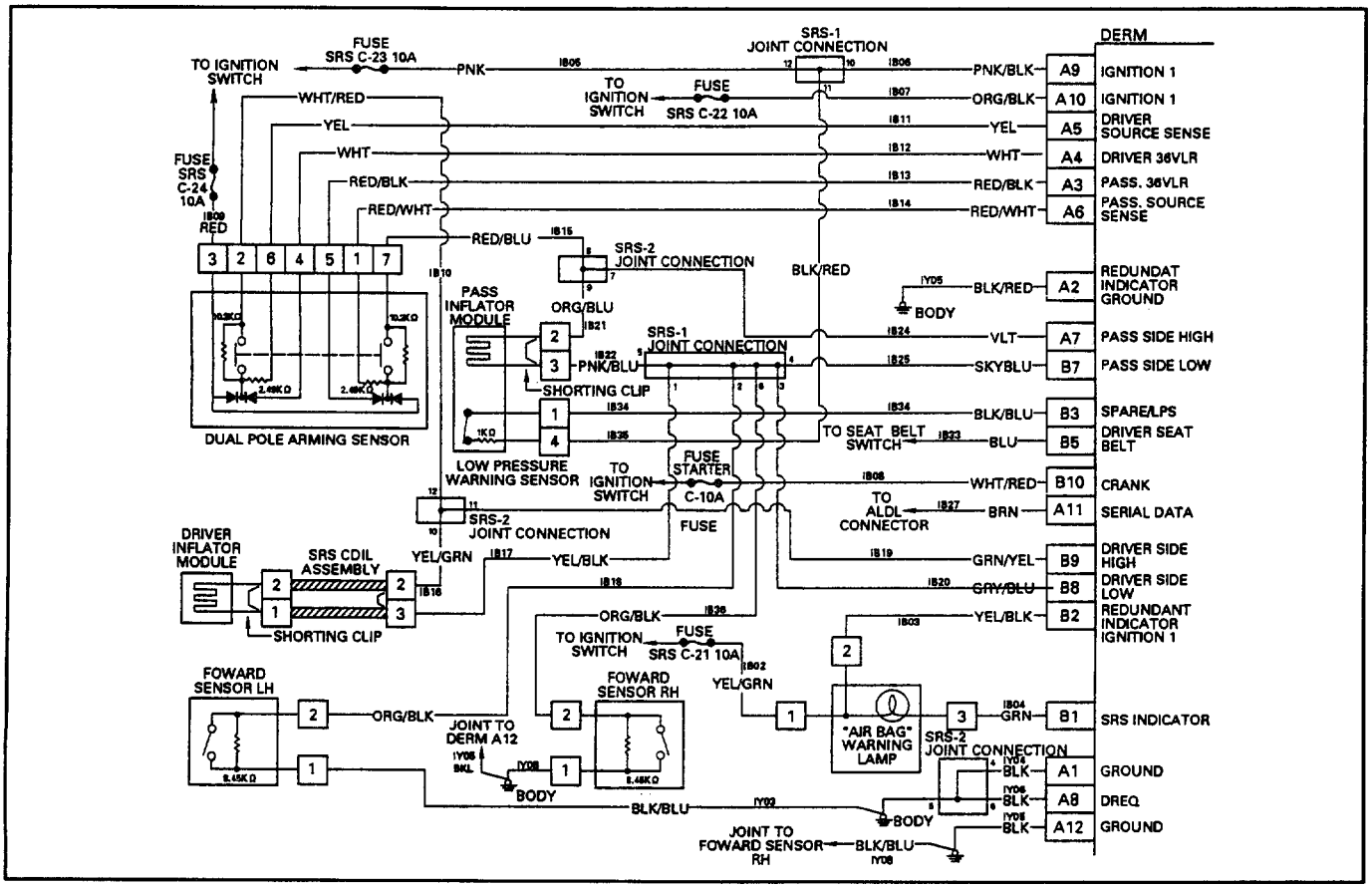

DTC37

HYBRID INFLATOR LOW PRESSURE

STEP	ACTION	YES	NO
1	WAS THE "SRS DIAGNOSTIC SYSTEM CHECK" PERFORMED?	GO TO STEP2.	GO TO THE "SRS DIAGNOSTIC SYSTEM CHECK."
2	WHEN MEASUREMENTS ARE REQUESTED IN THIS CHART USE J–39200 DVM WITH CORRECT TERMINAL ADAPTER FROM J–35616–A. IGNITION SWITCH "OFF." DISCONNECT DRIVER AND PASSENGER INFLATOR MODULES, YELLOW 2–WAY OR 4–WAY CONNECTORS LOCATED AT THE TOP OF THE STEERING COLUMN AND BEHIND THE I/P COMPARTMENT DOOR ASSEMBLY. CONNECT J–41433 SRS DRIVER/PASSENGER LOAD TOOL TO STEERING COLUMN HARNESS CONNECTOR AND PASSENGER INFLATOR MODULE HARNESS CONNECTOR. IGNITION SWITCH "ON." IS DTC 37 CURRENT?	GO TO STEP3.	GO TO STEP6.
3	IGNITION SWITCH "OFF." DISCONNECT SRS DRIVER/PASSENGER LOAD TOOL. DISCONNECT DERM. CHECK FOR PROPER CONNECTION TO DERM AT TERMINAL "B3". IF OK THEN MEASURE RESISTANCE FROM DERM HARNESS CONNECTOR TERMINAL "B3" TO PASSENGER INFLATOR MODULE HARNESS CONNECTOR TERMINAL "1". IS RESISTANCE 2.0Ω OR LESS?	GO TO STEP4.	GO TO STEP4.
4	MEASURE RESISTANCE ON DERM HARNESS CONNECTOR FROM TERMINAL "A1" TO TERMINAL "B3". IS RESISTANCE 5.0Ω OR LESS?	GO TO STEP5.	GO TO CHART A.
5	REPLACE SRS HARNESS.	GO TO STEP7.	
6	IGNITION SWITCH "OFF." REPLACE PASSENGER INFLATOR MODULE.	GO TO STEP7.	
7	RECONNECT ALL SRS COMPONENTS, ENSURE ALL COMPONENTS ARE PROPERLY MOUNTED. CLEAR SRS DIAGNOSTIC TROUBLE CODES. REPEAT "SRS DIAGNOSTIC SYSTEM CHECK."	GO TO THE "SRS DIAGNOSTIC SYSTEM CHECK".	

DTC42

LOOP ENERGY RESERVE VOLTAGE LOW

CIRCUIT DESCRIPTION

During the "Turn–ON" tests, performed at the beginning of each ignition cycle, the DERM delays charging of the "Driver "36 VLR" terminal "A4" and "Passenger 36 VLR" terminal "A3" power supplies. After delay has expired both "36 VLR" power supplies are allowed to change. The DERM monitors each "36 VLR" power supply to ensure each has changed to a voltage above a specified value within 10 seconds after "Ignition 1" voltage is first applied to DERM. When either "36 VLR" power supply does not reach the specified voltage within the allowed time or, once reaching the voltage, falls it for 500 milliseconds, DTC 42 is set.

DTC WILL SET WHEN

The voltage at either "36 VLR" power supply does not exceed a specified value within 10 seconds after "Ignition 1" voltage is first applied to the DERM or once having reached the specified value, either "36 VLR" power supply voltage falls below the specified value for 500 milliseconds. This test is run each ignition cycle at "Turn–ON" to detect a change time failure and, after charging, tested every 100 milliseconds during the "Continuous Monitoring" tests.

ACTION TAKEN

DERM turns "on" the "AIR BAG" warning lamp and sets a diagnostic trouble code.

DTC WILL CLEAR WHEN

The voltages measured at "Driver 36 VLR" terminal "A4" and "Passenger 36 VLR" terminal "A3" are above a specified value for 500 milliseconds.

DTC CHART TEST DESCRIPTION

Number(s) below refer to step number(s) on the diagnostic chart.

2. This test checks whether the DERM has set the diagnostic trouble code falsely.
3. This test checks whether a malfunctioning dual pole arming sensor is preventing dual pole arming sensor is preventing the "Driver 36 VLR" or "Passenger 36 VLR" from charging.
4. This test checks for a short from the "Driver 36 VLR" or "Passenger 36 VLR" circuit to B+.
5. This test checks for a short from the "Driver 36 VLR" or "Passenger 36 VLR" circuit to ground.

DIAGNOSTIC AIDS

An intermittent condition is likely to be caused by a short from "Driver 36 VLR" or "Passenger 36 VLR" to B+ or ground, or a short inside the dual pole arming sensor.

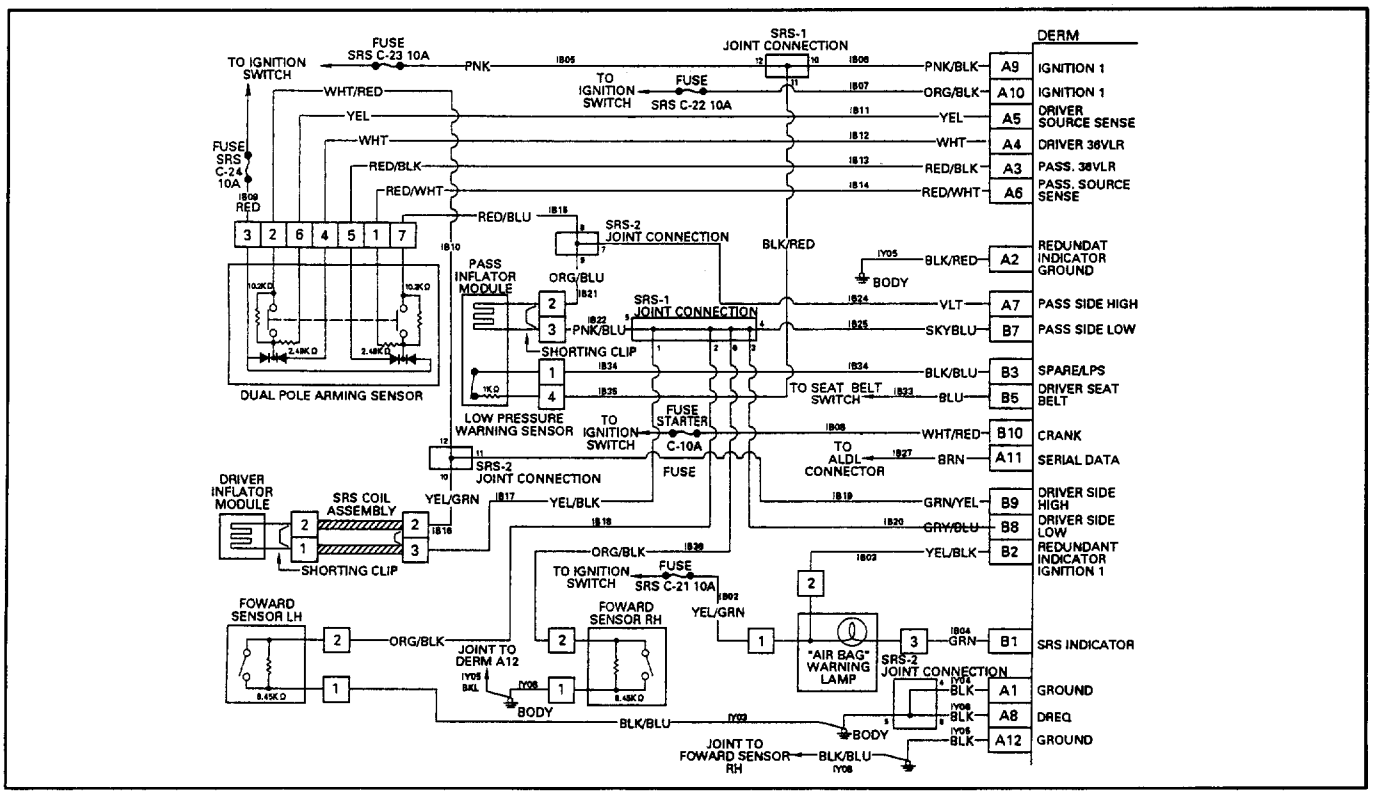

DTC 42

LOOP ENERGY RESERVE VOLTAGE LOW

STEP	ACTION	YES	NO
1	WAS THE "SRS DIAGNOSTIC SYSTEM CHECK" PERFORMED?	GO TO STEP2.	GO TO THE "SRS DIAGNOSTIC SYSTEM CHECK."
2	WHEN MEASUREMENTS ARE REQUESTED IN THIS CHART USE J–39200 DVM WITH CORRECT TERMINAL ADAPTER FROM J–35616–A. IGNITION SWITCH "ON." USING TECH–1 SRS DATA LIST FUNCTION SELECT "DRIVER 36 VLR" "PASS 36 VLR." RECORD BOTH "DRIVER 36 VLR" AND "PASS 36 VLR" VOLTAGES ON REPAIR ORDER. ARE BOTH RECORDED VOLTAGES 32.5 VOLTS OR MORE?	IGNITION SWITCH "OFF." GO TO CHART A.	GO TO STEP3.
3	IGNITION SWITCH "OFF." DISCONNECT DRIVER AND PASSENGER INFLATOR MODULES, YELLOW 2–WAY OR 4–WAY CONNECTORS LOCATED AT THE TOP OF THE STEERING COLUMN AND BEHIND THE I/P COMPONENT DOOR ASSEMBLY. DISCONNECT DUAL POLE ARMING SENSOR. IGNITION SWITCH "ON." USING TECH–1 SRS DATA LIST FUNCTION SELECT "DRIVER 36 VLR" "PASS 36 VLR." ARE THE DISPLAYED VOLTAGES ABOUT THE SAME AS THE RECORDED VOLTAGES?	GO TO STEP4.	GO TO STEP6.
4	USING TECH–1 SRS DATA LIST FUNCTION SELECT "IGNITION." IS THE DISPLAYED VOLTAGE ABOUT THE SAME AS THE RECORDED "DRIVER 36 VLR" "PASS 36 VLR." VOLTAGE?	GO TO STEP7.	GO TO STEP5.
5	IGNITION SWITCH "OFF." ARE EITHER OF THE RECORDED VOLTAGES 1 VOLT OR LESS?	GO TO STEP8.	GO TO CHART A.
6	IGNITION SWITCH "OFF." REPLACE DUAL POLE ARMING SENSOR.	GO TO STEP8.	
7	REPLACE SRS HARNESS.	GO TO STEP8.	
8	RECONNECT ALL SRS COMPONENTS, ENSURE ALL COMPONENTS ARE PROPERLY MOUNTED. CLEAR SRS DIAGNOSTIC TROUBLE CODES. REPEAT THE "SRS DIAGNOSTIC SYSTEM CHECK."	GO TO THE "SRS DIAGNOSTIC SYSTEM CHECK".	

DTC 43

DRIVER SOURCE FEED LOW

CIRCUIT DESCRIPTION

During normal, non–deployment operation of the SRS the DERM monitors the voltage supplied through the dual pole arming sensor to the high side of the driver deployment loop at the "Driver Source Sense" terminal "A5". This measured voltage will have a value approximately equal to "Driver 36 VLR." When the voltage measured at "Driver Side Low" terminal "B8" is in its normal operating range, indicating driver deployment loop integrity has been maintained, while simultaneously the voltage measured at "Driver Source Sense" is a specified amount below "Driver 36 VLR" for 500 milliseconds DTC 43 is set.

DTC WILL SET WHEN

The voltage measured at "Driver Side Low" terminal "B8" is within a specified percentage of "Driver 36 VLR" while simultaneously the voltage measured at "Driver Source Sense" terminal during the "Continuous Monitoring" tests.

ACTION TAKEN

DERM turns "ON" the "AIR BAG" warning lamp and sets a diagnostic trouble code.

DTC WILL CLEAR WHEN

The voltage measured at "Driver Side Low" terminal "B8" is within a specified percentage of "Driver 36 VLR" while simultaneously the voltage measured at "Driver Source Sense" terminal "A5" is within a specified amount of "Driver 36 VLR" for 500 milliseconds.

DTC CHART TEST DESCRIPTION

Number(s) below refer to step number(s) on the diagnostic chart.

2. This test checks for an open in "Driver Source Sense" circuit.
3. This test checks for a short from the "Driver Source Sense" circuit to ground.
4. This test determines whether the malfunction is due to increased resistance across the "Driver Source Sense" resistor in the dual pole arming sensor.

DIAGNOSTIC AIDS

An intermittent condition is likely to be caused by a poor connection to the DERM at terminal "A5", a poor connection to the dual pole arming sensor at terminal "6", an open or short to ground in CKT IB11 or a partial open inside the dual pole arming sensor.

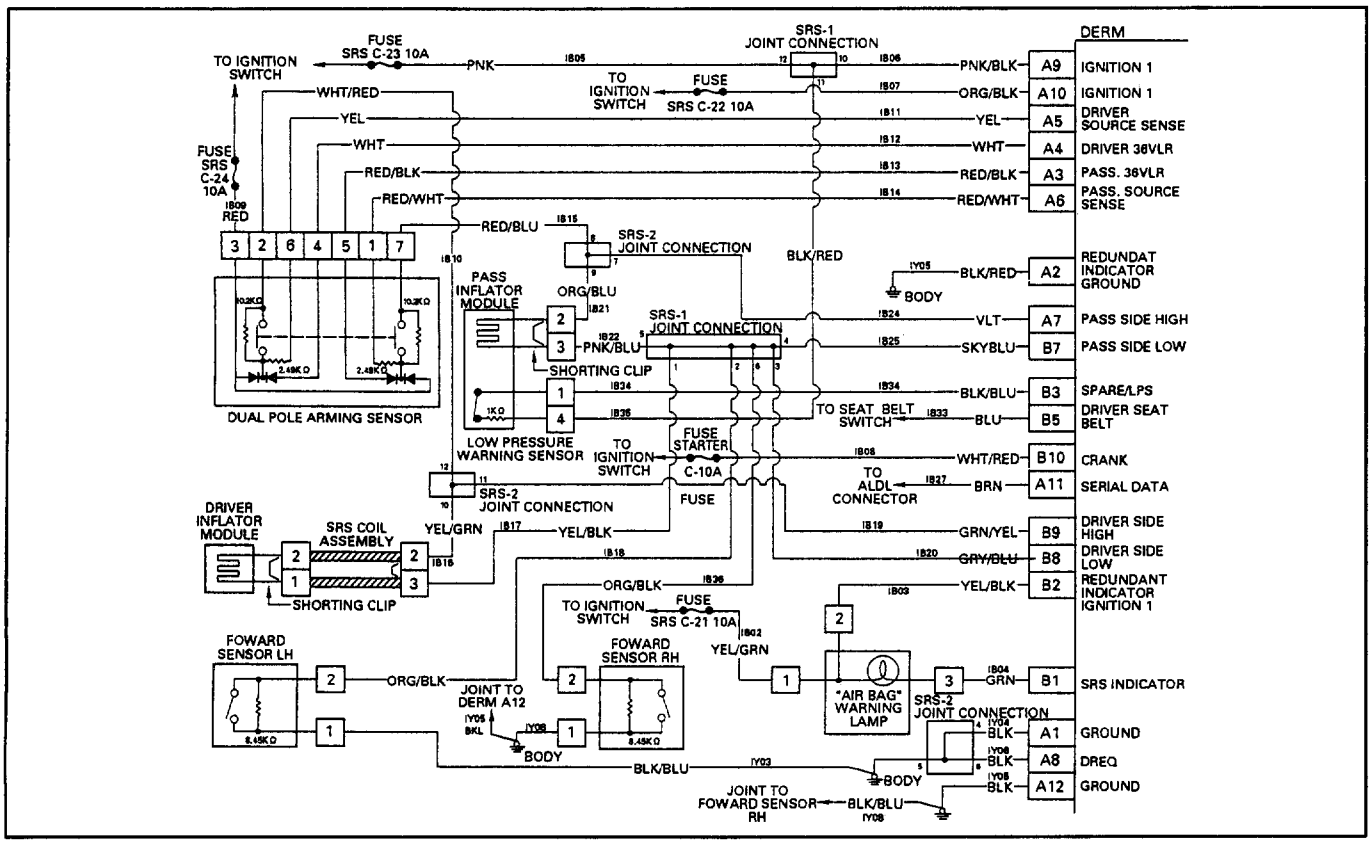

DTC 43

DRIVER SOURCE FEED LOW

STEP	ACTION	YES	NO
1	WAS THE "SRS DIAGNOSTIC SYSTEM CHECK" PERFORMED?	GO TO STEP2.	GO TO THE "SRS DIAGNOSTIC SYSTEM CHECK."
2	WHEN MEASUREMENTS ARE REQUESTED IN THIS CHART USE J–39200 DVM WITH CORRECT TERMINAL ADAPTER FROM J–35616–A. IGNITION SWITCH "OFF." DISCONNECT DRIVER AND PASSENGER INFLATOR MODULES, YELLOW 2–WAY OR 4–WAY CONNECTORS LOCATED AT THE TOP OF THE STEERING COLUMN AND BEHIND THE I/P COMPONENT DOOR ASSEMBLY. DISCONNECT DERM. CHECK FOR PROPER CONNECTION TO DERM AT TERMINAL "A5". IF OK THEN DISCONNECT DUAL POLE ARMING SENSOR. CHECK FOR PROPER CONNECTION TO DUAL POLE ARMING SENSOR AT TERMINAL "6". IF OK, THEN MEASURE RESISTANCE FROM DUAL POLE ARMING SENSOR HARNESS CONNECTOR TERMINAL "6" TO DERM HARNESS CONNECTOR TERMINAL "A5". IS RESISTANCE 5.0Ω OR LESS?	GO TO STEP3.	GO TO STEP5.
3	MEASURE RESISTANCE ON DERM HARNESS CONNECTOR FROM TERMINAL "A5" TO TERMINAL "A1"(GROUND). DOES J39200 DISPLAY "OL"(INFINITE)?	GO TO STEP4.	GO TO STEP5.
4	MEASURE RESISTANCE ON DUAL POLE ARMING SENSOR CONNECTOR FROM TERMINAL "2" TO TERMINAL "6". IS RESISTANCE 12.9KΩ OR MORE?	GO TO STEP6.	GO TO CHART A.
5	REPLACE SRS HARNESS.	GO TO STEP7.	
6	REPLACE SRS DUAL POLE ARMING SENSOR.	GO TO STEP7.	
7	REPLACE DUAL POLE ARMING SENSOR. RECONNECT ALL SRS COMPONENTS, ENSURE ALL COMPONENTS ARE PROPERLY MOUNTED. CLEAR SRS DIAGNOSTIC TROUBLE CODES. REPEAT "SRS DIAGNOSTIC SYSTEM CHECK."	GO TO THE "SRS DIAGNOSTIC SYSTEM CHECK".	

DTC 44

PASSENGER SOURCE FEED LOW

CIRCUIT DESCRIPTION

During normal, non–deployment operation of the SRS the DERM monitors the voltage supplied through the dual pole arming sensor to the high side of the passenger deployment loop at the "Passenger Source Sense" terminal "A6". This measured voltage will have a value approximately equal to "Passenger 36 VLR." When the voltage measured at "Passenger Side Low" terminal "B7" is in its normal operating range, indicating passenger deployment loop integrity has been maintained, while simultaneously the voltage measured at "Passenger Source Sense" is a specified amount below "Passenger 36 VLR" for 500 milliseconds DTC 44 is set.

DTC WILL SET WHEN

The voltage measured at "Passenger Side Low" terminal "B7" is within a specified percentage of "Passenger 36 VLR" while simultaneously the voltage measured at "Passenger Source Sense" terminal "A6" is within a specified amount below "Passenger 36 VLR" for 500 milliseconds. This test is run every 100 milliseconds during the "Continuous Monitoring" tests.

ACTION TAKEN

DERM turns "ON" the "AIR BAG" warning lamp and sets a diagnostic trouble code.

DTC WILL CLEAR WHEN

The voltage measured at "Passenger Side Low" terminal "B7" is within a specified percentage of "Passenger 36 VLR" while simultaneously the voltage measured at "Passenger Source Sense" terminal "A6" is within a specified amount of "Passenger 36 VLR" for 500 milliseconds.

DTC CHART TEST DESCRIPTION

Number(s) below refer to step number(s) on the diagnostic chart.

2. This test checks for an open in "Passenger Source Sense" circuit.
3. This test checks for a short from the "Passenger Source Sense" circuit to ground.
4. This test determines whether the malfunction is due to increased resistance across the "Passenger Source Sense" resistor in the dual pole arming sensor.

DIAGNOSTIC AIDS

An intermittent condition is likely to be caused by a poor connection to the DERM at terminal "A6", a poor connection to the dual pole arming sensor at terminal "1", an open or short to ground in CKT IB14 or a partial open inside the dual pole arming sensor.

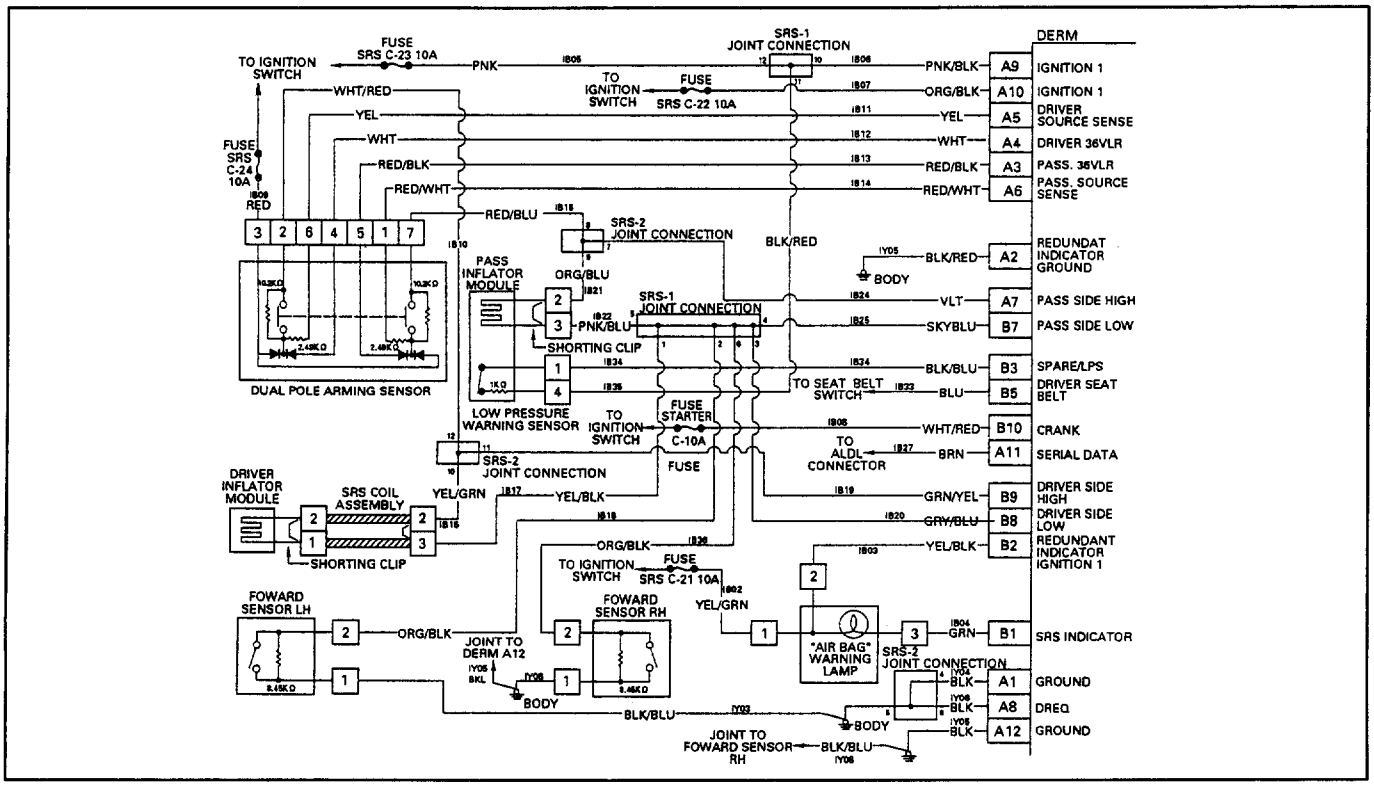

DTC 44

PASSENGER SOURCE FEED LOW

STEP	ACTION	YES	NO
1	WAS THE "SRS DIAGNOSTIC SYSTEM CHECK" PERFORMED?	GO TO STEP2.	GO TO THE "SRS DIAGNOSTIC SYSTEM CHECK."
2	WHEN MEASUREMENTS ARE REQUESTED IN THIS CHART USE J–39200 DVM WITH CORRECT TERMINAL ADAPTER FROM J–35616–A. IGNITION SWITCH "OFF." DISCONNECT DRIVER AND PASSENGER INFLATOR MODULES, YELLOW 2–WAY OR 4–WAY CONNECTORS LOCATED AT THE TOP OF THE STEERING COLUMN AND BEHIND THE I/P COMPONENT DOOR ASSEMBLY. DISCONNECT DERM. CHECK FOR PROPER CONNECTION TO DERM AT TERMINAL "A6". IF OK THEN DISCONNECT DUAL POLE ARMING SENSOR. CHECK FOR PROPER CONNECTION TO DUAL POLE ARMING SENSOR AT TERMINAL "1". IF OK, THEN MEASURE RESISTANCE FROM DUAL POLE ARMING SENSOR HARNESS CONNECTOR TERMINAL "1" TO DERM HARNESS CONNECTOR TERMINAL "A6". IS RESISTANCE 5.0Ω OR LESS?	GO TO STEP3.	GO TO STEP5.
3	MEASURE RESISTANCE ON DERM HARNESS CONNECTOR FROM TERMINAL "A6" TO TERMINAL "A1"(GROUND). DOES J–39200 DISPLAY "OL"(INFINITE)?	GO TO STEP4.	GO TO STEP5.
4	MEASURE RESISTANCE ON DUAL POLE ARMING SENSOR CONNECTOR FROM TERMINAL "1" TO TERMINAL "7". IS RESISTANCE 12.9KΩ OR MORE?	GO TO STEP6.	GO TO CHART A.
5	REPLACE SRS HARNESS.	GO TO STEP7.	
6	REPLACE DUAL POLE ARMING SENSOR.	GO TO STEP7.	
7	RECONNECT ALL SRS COMPONENTS, ENSURE ALL COMPONENTS ARE PROPERLY MOUNTED. CLEAR SRS DIAGNOSTIC TROUBLE CODES. REPEAT THE "SRS DIAGNOSTIC SYSTEM CHECK."	GO TO THE "SRS DIAGNOSTIC SYSTEM CHECK".	

DTC 51

FRONTAL CRASH DETECTED

CIRCUIT DESCRIPTION

Closure of the dual pole arming sensor is detected when the voltage measured at "Driver Side High" terminal "B9" or at "Passenger Side High" terminal "A7" is within a specified amount of its respective deployment loop supply voltage. Closure of either discriminating sensor is detected when the voltage measured at "Driver Side High" terminal "B8" or at "Passenger Side High" terminal "B7" is within a specified amount of ground potential. When both conditions are met simultaneously on either driver side or passenger side for not less than 250 milliseconds "Crash Data" is recorded and DTC 51 is set.

DTC WILL SET WHEN

Closure of the dual pole arming sensor and at least one discriminating sensors is detected for not less than 250 microseconds on either the driver side or passenger side. Conditions are monitored whenever the DERM is functioning normally.

ACTION TAKEN

DERM turns "ON" the "AIR BAG" warning lamp, records "Crash Data," and sets a diagnostic trouble code.

DTC WILL CLEAR WHEN

A scan tool "Clear Codes" command is received by the DERM.

DTC CHART TEST DESCRIPTION

Number(s) below refer to step number(s) on the diagnostic chart.

3. If inflator module(s) has not deployed, DTC 51 may have set falsely.
4. If DTC 51 has set with no signs of frontal impact, the diagnostic trouble code has set falsely.
5. This test checks for a DERM malfunction setting the diagnostic trouble code.
6. This test checks for a DERM malfunction setting the diagnostic trouble code.
7. This test determines whether the diagnostic trouble code was set inadvertently during diagnosis.
8. When a frontal crash has occurred, it is necessary to perform the indicated procedures to ensure the SIR system is fully functional.

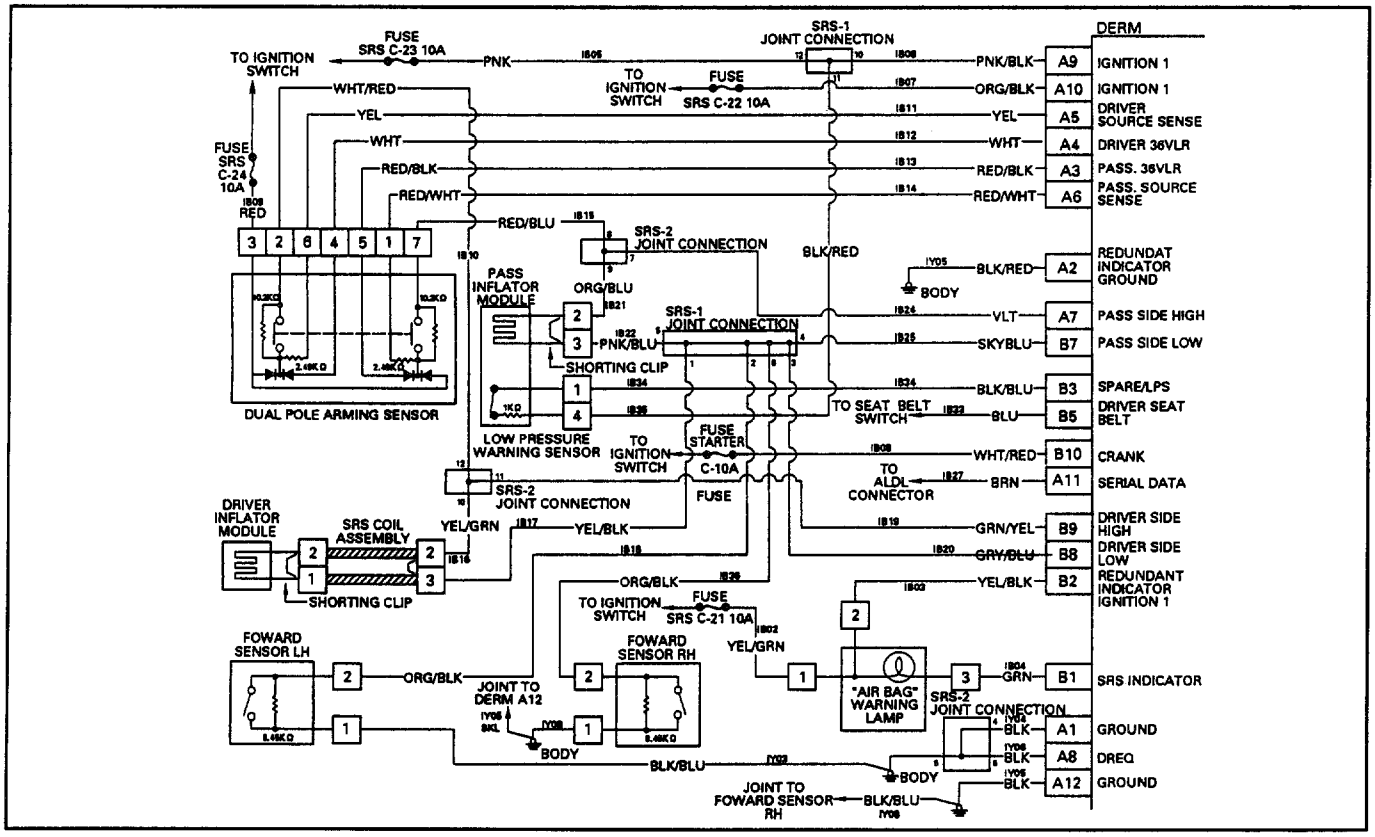

DTC 51

FRONTAL CRASH DETECTED

STEP	ACTION	YES	NO
1	WAS THE "SRS DIAGNOSTIC SYSTEM CHECK" PERFORMED?	GO TO STEP2.	GO TO THE "SRS DIAGNOSTIC SYSTEM CHECK."
2	IS DTC 51 CURRENT?	GO TO STEP3.	GO TO THE "SRS DIAGNOSTIC SYSTEM CHECK".
3	IGNITION SWITCH "OFF." HAS INFLATOR MODULE(S) DEPLOYED?	GO TO STEP8.	GO TO STEP4.
4	INSPECT FRONT OF VEHICLE AND UNDERCARRIAGE FOR SIGNS OF IMPACT.	GO TO STEP8.	GO TO STEP5.
5	IGNITION SWITCH "ON." USING TECH 1 DATA LIST FUNCTION SELECT "DEPLOY COMMAND." IS DEPLOY COMMAND "ACTIVE"?	IGNITION SWITCH "OFF." GO TO CHART A.	GO TO STEP6.
6	CLEAR SRS DIAGNOSTIC TROUBLE CODES. IS DTC 51 SET?	IGNITION SWITCH "OFF." GO TO CHART A.	GO TO STEP7.
7	IGNITION SWITCH "OFF." WAS DTC 51 SET WHEN THE "SRS DIAGNOSTIC SYSTEM CHECK"WAS FIRST PERFORMED?	GO TO CHART A.	REPEAT THE "SRS DIAGNOSTIC SYSTEM CHECK."
8	REPLACE COMPONENTS AND PERFORM INSPECTIONS AS DIRECTED IN "REPAIRS AND INSPECTIONS REQUIRED AFTER AN ACCIDENT" IN THIS SECTION. CLEAR SRS DIAGNOSTIC TROUBLE CORES. REPEAT THE "SRS DIAGNOSTIC SYSTEM CHECK."	GO TO THE "SRS DIAGNOSTIC SYSTEM CHECK".	

DTC 52

DATA AREA FULL

CIRCUIT DESCRIPTION

When there is a frontal crash of sufficient force to activate the dual pole arming sensor and at least one of the two discriminating sensors simultaneously, DTC 51 is set. At this time the DERM will record information regarding SIR system status and vehicle status in EEPROM. DTC 52 will set when the DERM has stored information regarding eight frontal crash events.

DTC WILL SET WHEN

The DERM attempts to store frontal crash information and finds the EEPROM data area full. This test is run each time the DERM stores or attempts to store information regarding a frontal crash event.

ACTION TAKEN

DERM turns "ON" the "AIR BAG" warning lamp and sets a diagnostic trouble code.

DTC WILL CLEAR WHEN

A scan tool "Clear Codes" command is received by the DERM. If, at the next ignition "ON" after receiving a "Clear Codes" command, the DERM detects the data area is full, a history diagnostic trouble code is set. This allows the "AIR BAG" warming lamp to illuminate should any additional malfunctions be detected.

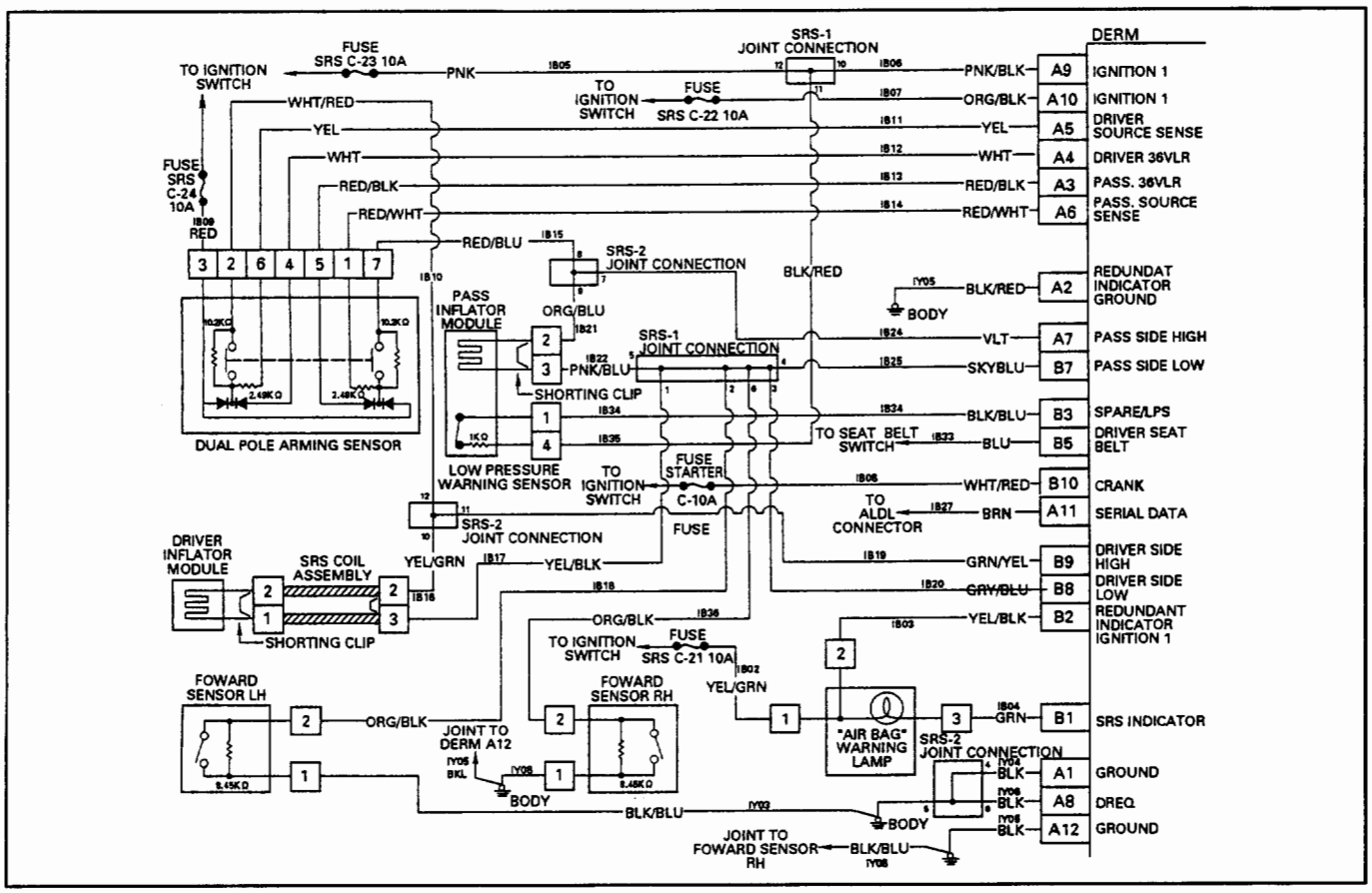

DTC 52

DATA AREA FULL

STEP	ACTION	YES	NO
1	WAS THE "SRS DIAGNOSTIC SYSTEM CHECK" PERFORMED?	REPLACE DERM. REPEAT THE "SRS DIAGNOSTIC SYSTEM CHECK."	GO TO THE "SRS DIAGNOSTIC SYSTEM CHECK."

DTC 53

DRIVER SIDE LOW HIGH RESISTANCE

CIRCUIT DESCRIPTION

During the "Initiator Assembly Resistance Test" the DERM grounds the "Driver Side Low" terminal "B8" and turns "ON" the passenger current source at the "Passenger Side High" terminal "A7". This causes a known amount of current to flow through the passenger initiator circuit allowing this resistance to be calculated. The normal, non–deployment current flow through the driver deployment loop is also affected since the DERM is supplying ground through a resistor bypassing the ground supplied by the resistance of the discriminating sensor network. When the voltage difference between "Driver Side High" terminal "B9" and "Driver Side Low" terminal "B8" is above a specified value DTC 53 is set.

DTC WILL SET WHEN

The voltage difference between "Driver Side High" terminal "B9" Driver Side Low" terminal "B8" is above a specified value. This test is run once each ignition cycle during the "Initiator Assembly Resistance Test" when: 1) No "higher priority faults" are detected during "Turn–ON," 2) No "higher priority faults" are detected during "Continuous Monitoring for one second, 3) No "Crank" signal present, 4) "Ignition 1" voltage is above a specified value.

ACTION TAKEN

DERM turns "ON" the "AIR BAG" warning lamp and sets a diagnostic trouble code.

DTC WILL CLEAR WHEN

The ignition switch is turned "OFF."

DTC CHART TEST DESCRIPTION

Number(s) below refer to step number(s) on the diagnostic chart.

2. This test determines whether the malfunction is due to a high resistance or open in the "Driver Side Low" circuit between the DERM and the Steering column harness connector.

DIAGNOSTIC AIDS

An intermittent condition is likely to be caused by a poor connection at DERM terminal "B8" or an open in CKT IB20. The test for this diagnostic trouble code is run only while the "AIR BAG" warning lamp is performing the bulb check. When a scan tool "Clear Codes" command is issued and the malfunction is still present, the dtc will not reappear until the next ignition cycle.

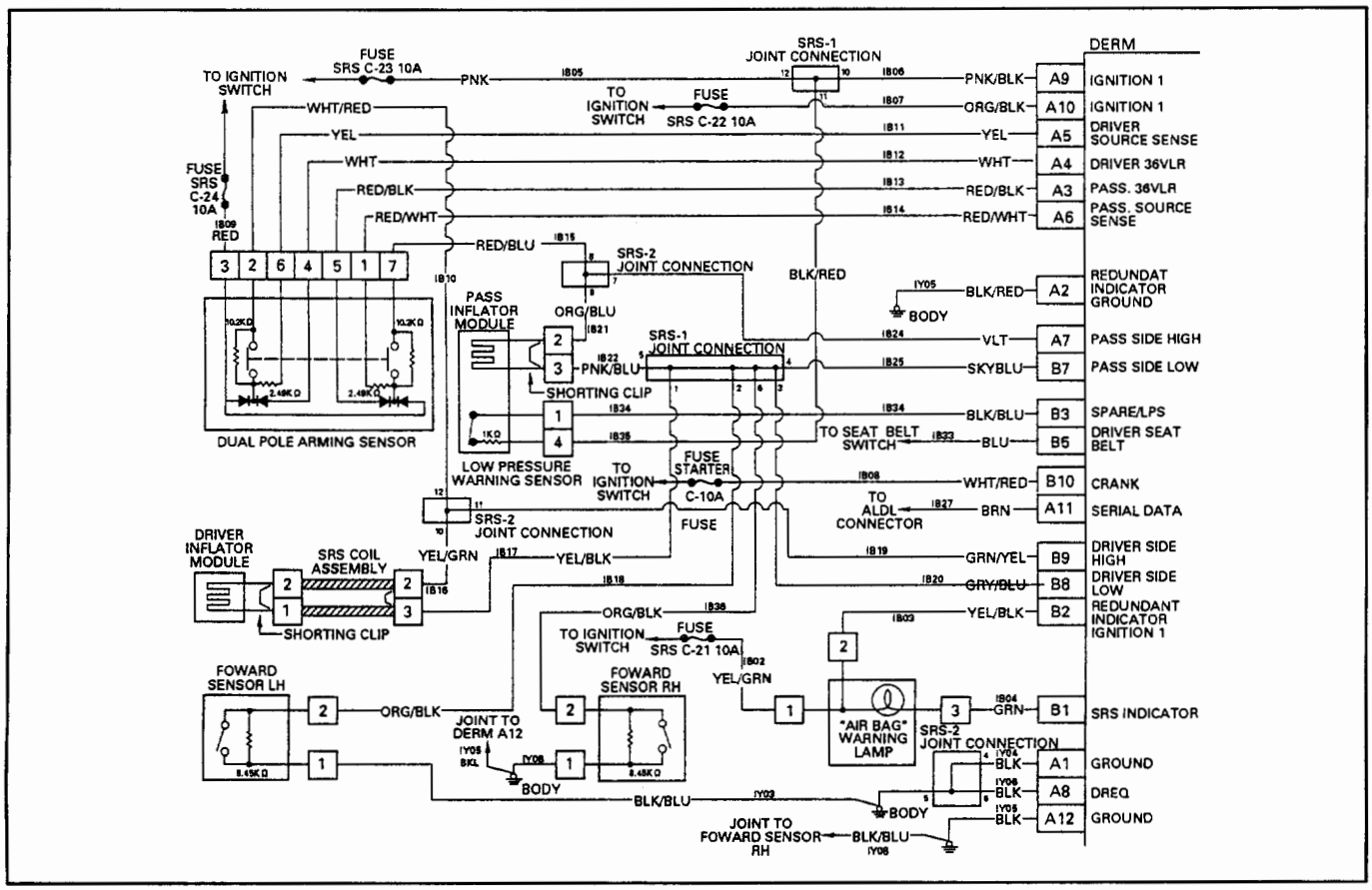

DTC 53

DRIVER SIDE LOW HIGH RESISTANCE

STEP	ACTION	YES	NO
1	WAS THE "SRS DIAGNOSTIC SYSTEM CHECK" PERFORMED?	GO TO STEP2.	GO TO THE "SRS DIAGNOSTIC SYSTEM CHECK."
2	WHEN MEASUREMENTS ARE REQUESTED IN THIS CHART USE J–39200 DVM WITH CORRECT TERMINAL ADAPTER FROM J–35616–A. IGNITION SWITCH "OFF." DISCONNECT DRIVER AND PASSENGER INFLATOR MODULES, YELLOW 2–WAY OR 4–WAY CONNECTORS LOCATED AT THE TOP OF THE STEERING COLUMN AND BEHIND THE I/P COMPARTMENT DOOR ASSEMBLY. DISCONNECT DERM. CHECK FOR PROPER CONNECTION TO DERM AT TERMINAL "B8" IF OK THEN MEASURE RESISTANCE FROM DERM HARNESS CONNECTOR TERMINAL "B8" TO STEERING COLUMN HARNESS CONNECTOR TERMINAL "1". IS RESISTANCE 5.0Ω OR LESS?	GO TO CHART A.	GO TO STEP3.
3	REPLACE SRS HARNESS. RECONNECT ALL SRS COMPONENTS, ENSURE ALL COMPONENTS ARE PROPERLY MOUNTED. CLEAR SRS DIAGNOSTIC TROUBLE CODES. REPEAT THE "SRS" DIAGNOSTIC SYSTEM CHECK."	GO TO THE "SRS DIAGNOSTIC SYSTEM CHECK".	

DTC 54

PASSENGER SIDE LOW HIGH RESISTANCE

CIRCUIT DESCRIPTION

During the "Initiator Assembly Resistance Test" the DERM grounds the "Passenger Side Low" terminal "B7" and turns "ON" the driver current source at the "Driver Side High" terminal "B9". this causes a known amount of current to flow through the driver initiator circuit allowing the resistance to be calculated. The normal, non–deployment current flow through the passenger deployment loop is also affected since the DERM is supplying ground through a resistor bypassing the ground supplied by the resistance of the discriminating sensor network. When the voltage difference between "Passenger Side High" terminal "A7" and "Passenger Side Low" terminal "B7" is above a specified value DTC 54 is set.

DTC WILL SET WHEN

The voltage difference between "Passenger Side High" terminal "A7" and "Passenger Side Low" terminal "B7" is above a specified value. This test is run once each ignition cycle during the "Initiator Assembly Resistance Test" when: 1)No "higher priority faults" are detected during "Turn –ON," 2)No "higher priority faults" are detected during "Continuous Monitoring" for one second, 3)NO "Crank" signal present, 4)"Ignition 1" is above a specified value.

ACTION TAKEN

DERM turns "ON" the "AIR BAG" warning lamp and sets a diagnostic trouble code.

DTC WILL CLEAR WHEN

The ignition switch is turned "OFF."

DTC CHART TEST DESCRIPTION

Number(s) below refer to step number(s) on the diagnostic chart.

2. This test determines whether the malfunction is due to a high resistance or open in the "Passenger Side Low" circuit between the DERM and the passenger inflator module harness connector.

DIAGNOSTIC AIDS

An intermittent condition is likely to be caused by a poor connection at DERM terminal "B7" or an open in CKT. The test for this diagnostic trouble code is run only while the "AIR BAG" warning lamp is performing the bulb check. When a scan tool "Clear Codes" command is issued and the malfunction is still present, the DTC will not reappear until the next ignition cycle.

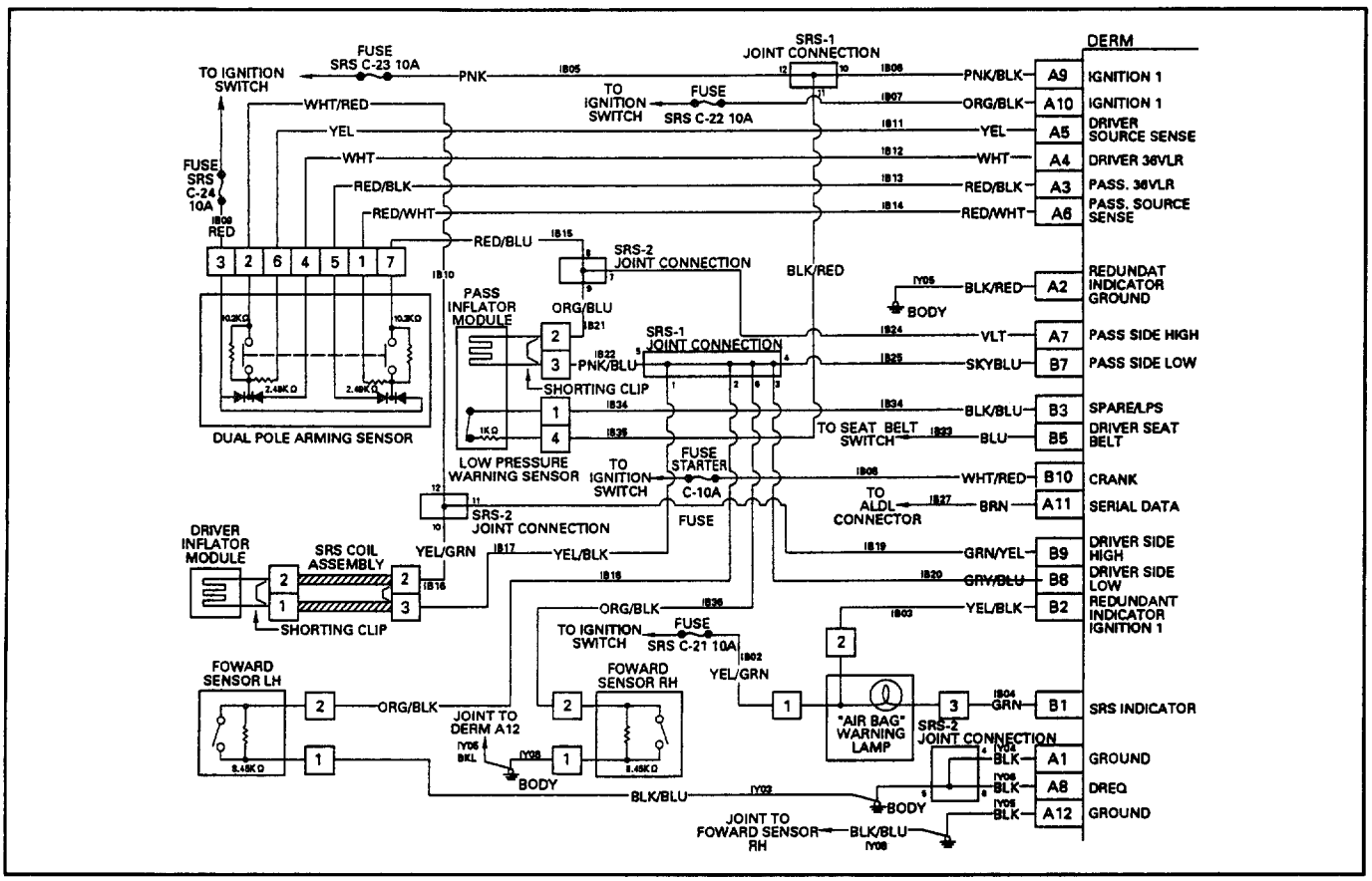

DTC 54

PASSENGER SIDE LOW HIGH RESISTANCE

STEP	ACTION	YES	NO
1	WAS THE "SRS DIAGNOSTIC SYSTEM CHECK" PERFORMED?	GO TO STEP2.	GO TO THE "SRS DIAGNOSTIC SYSTEM CHECK."
2	WHEN MEASUREMENTS ARE REQUESTED IN THIS CHART USE J 39200 DVM WITH CORRECT TERMINAL ADAPTER FROM J 35616–A. IGNITION SWITCH "OFF." DISCONNECT DRIVER AND PASSENGER INFLATOR MODULES, YELLOW 2–WAY OR 4–WAY CONNECTORS LOCATED AT THE TOP OF THE STEERING COLUMN AND BEHIND THE I/P COMPARTMENT DOOR ASSEMBLY. DISCONNECT DERM. CHECK FOR PROPER CONNECTION TO DERM AT TERMINAL "B7". IF OK THEN MEASURE RESISTANCE FROM DERM HARNESS CONNECTOR TERMINAL "B7" TO PASSENGER INFLATOR MODULE HARNESS CONNECTOR TERMINAL "3". IS RESISTANCE 5.0Ω OR LESS?	GO TO CHART A.	GO TO STEP3.
3	REPLACE SRS HARNESSRECONNECT ALL SRS COMPONENTS, ENSURE ALL COMPONENTS ARE PROPERLY MOUNTED. CLEAR SRS DIAGNOSTIC TROUBLE CODES. REPEAT THE "SRS DIAGNOSTIC SYSTEM CHECK."	GO TO THE "SRS DIAGNOSTIC SYSTEM CHECK".	

DTC 55

DERM INCOMPATIBILITY

CIRCUIT DESCRIPTION

During the "Initiator Assembly Resistance Test" the DERM grounds the "Passenger Side Low" terminal "B7" and measures the voltage at "Driver Source Sense" terminal "A5" , "Passenger Source Sense" terminal "A6" and "Driver Side Low" terminal "B8". The DERM monitors "Driver Source Sense" to ensure that "Driver 36 VLR" is fully charged and supplying voltage to the high side of the driver deployment loop. When this condition is met, the measurement at "Passenger Source Sense" indicates no voltage is being supplied to the high side of the passenger deployment loop and grounding "Passenger Side Low" does no ground "Driver Side Low," DTC 55 is set.

DTC WILL SET WHEN

The conditions described above indicate a driver only DERM has been installed in the vehicle. This test is run once each ignition cycle during the "Initiator Assembly Resistance Test" when: 1)No "higher priority faults" are detected during "Turn–ON," 2)No "higher priority faults" are detected during "Continuous Monitoring " for one second, 3)No "Crank" signal present, 4)"Ignition 1" voltage is above a specified value.

ACTION TAKEN

DERM turns "ON" the "AIR BAG" warning lamp and sets a diagnostic trouble code.

DTC WILL CLEAR WHEN

The ignition switch is turned "OFF."

DTC CHART TEST DESCRIPTION

Number(s) below refer to step number(s) on the diagnostic chart.

2. This test determines whether the malfunction is due to a high resistance or open in the "DIAGNOSTIC CODES REQUEST" circuit between the DERM and the ground.

3. This test determines whether the malfunction is due to a high resistance or open in the "DIAGNOSTIC CODES REQUEST" circuit between the DERM and the ground.

DIAGNOSTIC AIDS

An intermittent condition is likely to be caused by a poor connection at DERM terminal "A8" or an open in CKT IY06.The test for this diagnostic trouble code is run only while the "AIR BAG" warning lamp is performing command is issued and the malfunction is still present, the DTC will not reappear until the next ignition cycle.

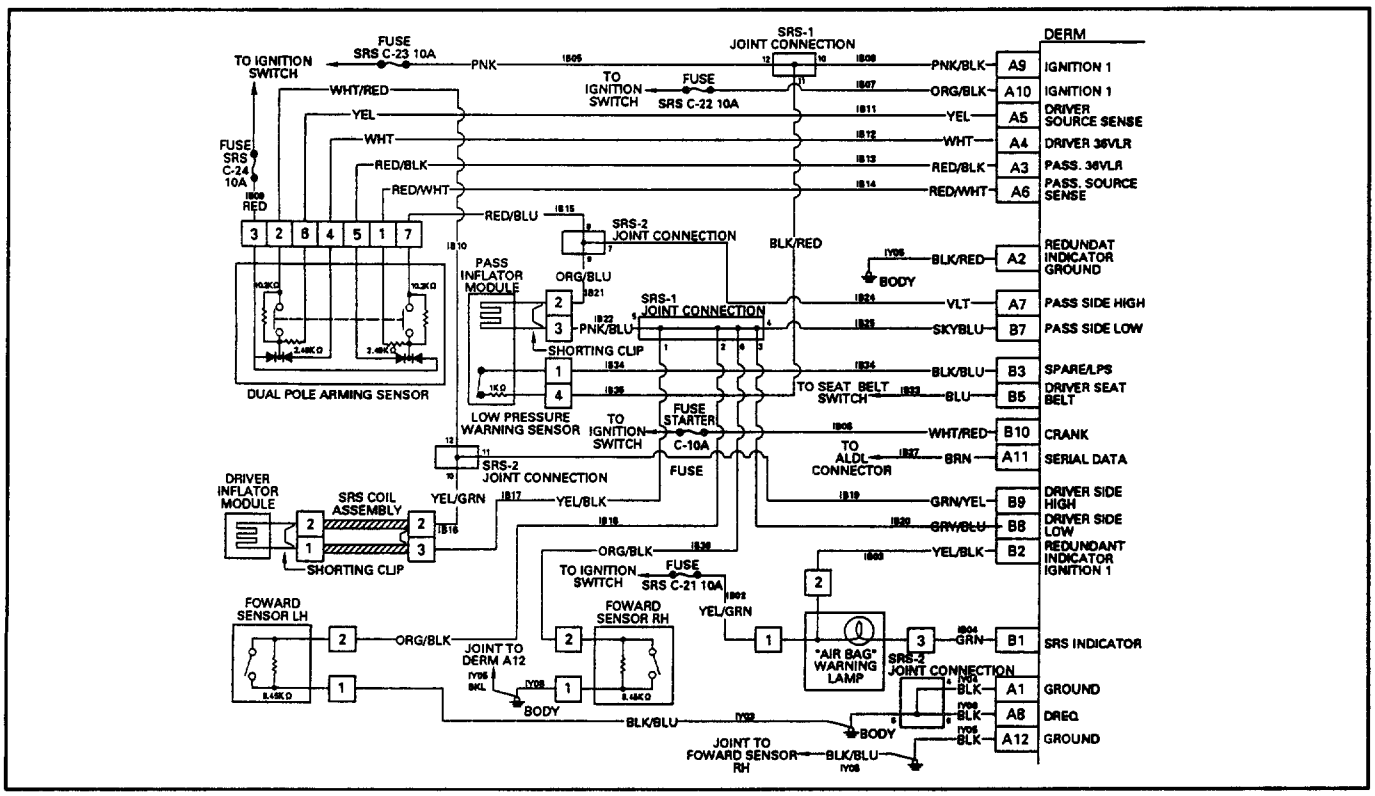

DTC 55

DERM INCOMPATIBILITY

STEP	ACTION	YES	NO
1	WAS THE "SRS DIAGNOSTIC SYSTEM CHECK" PERFORMED?	GO TO STEP2.	GO TO THE "SRS DIAGNOSTIC SYSTEM CHECK."
2	WHEN MEASUREMENTS ARE REQUESTED IN THIS CHART USE J–39200 DVM WITH CORRECT TERMINAL ADAPTER FROM J–35616–A. IGNITION SWITCH "OFF"DISCONNECT DRIVER AND PASSENGER INFLATOR MODULES. YELLOW 2–WAY OR 4–WAY CONNECTORS LOCATED AT THE TOP OF THE STEERING COLUMN AND BEHIND THE I/P COMPARTMENT DOOR ASSEMBLY. DISCONNECT DERMCHECK FOR PROPER CONNECTION TO DERM AT TERMINAL "A8". IF OK THEN MEASURE RESISTANCE ON DERM HARNESS CONNECTOR FROM TERMINAL "A8" TO TERMINAL "A1". IS RESISTANCE 5.0Ω OR LESS?	REPLACE DERM. REPEAT THE "SRS DIAGNOSTIC SYSTEM CHECK."	GO TO STEP3
3	MEASURE RESISTANCE ON DERM HARNESS CONNECTOR FROM TERMINAL "A8" TO TERMINAL "A12". IS RESISTANCE 5.0Ω OR LESS?	REPLACE DERM. REPEAT THE "SRS DIAGNOSTIC SYSTEM CHECK."	GO TO STEP4.
4	REPLACE SRS HARNESS RECONNECT ALL SRS COMPONENTS ENSURE ALL COMPONENTS ARE PROPERLY MOUNTED. CLEAR SRS DIAGNOSTIC TROUBLE CODES. REPEAT THE "SRS DIAGNOSTIC SYSTEM CHECK."	GO TO THE "SRS DIAGNOSTIC SYSTEM CHECK".	

DTC 61

SRS INDICATOR CIRCUIT FAILURE

CIRCUIT DESCRIPTION

When the ignition switch is first turned "ON" battery voltage is applied to the "AIR BAG" warning lamp and to the "Ignition 1" input terminals "A9" and "A10". The DERM responds by flashing the "AIR BAG" warning lamp seven times alternating between the primary and redundant lamp drivers. The DERM monitors the primary lamp driver output by comparing the output state at "SRS Indicator" terminal "B1" to the microprocessor commanded state. When "Ignition 1" is above a specified value and the output state does not match the commanded state of the primary lamp driver for 400 milliseconds DTC61 is set.

DTC WILL SET WHEN

"Ignition 1" voltage is above a specified value and the output state at the "SRS Indicator" terminal "B1" does not match the commanded state of the primary lamp driver for 400 milliseconds. This test is run every 100 milliseconds during "Continuous Monitoring" tests.

ACTION TAKEN

DERM attempts to turn "ON" the "AIR BAG" warning lamp using the redundant lamp driver and sets a diagnostic trouble code.

DTC WILL CLEAR WHEN

The ignition switch is turned "OFF."

DTC CHART TEST DESCRIPTION

Number(s) below refer to step number(s) on the diagnostic chart.

2. When the DERM is configured for a serial data controlled warning lamp (smart cluster) DTC61 will set. Clearing SRS diagnostic trouble codes will reset the DERM allowing the DERM to control the "AIR BAG" warning lamp.

DIAGNOSTIC AIDS

Refer to CHARTS B and C to diagnose warning lamp circuit malfunctions.

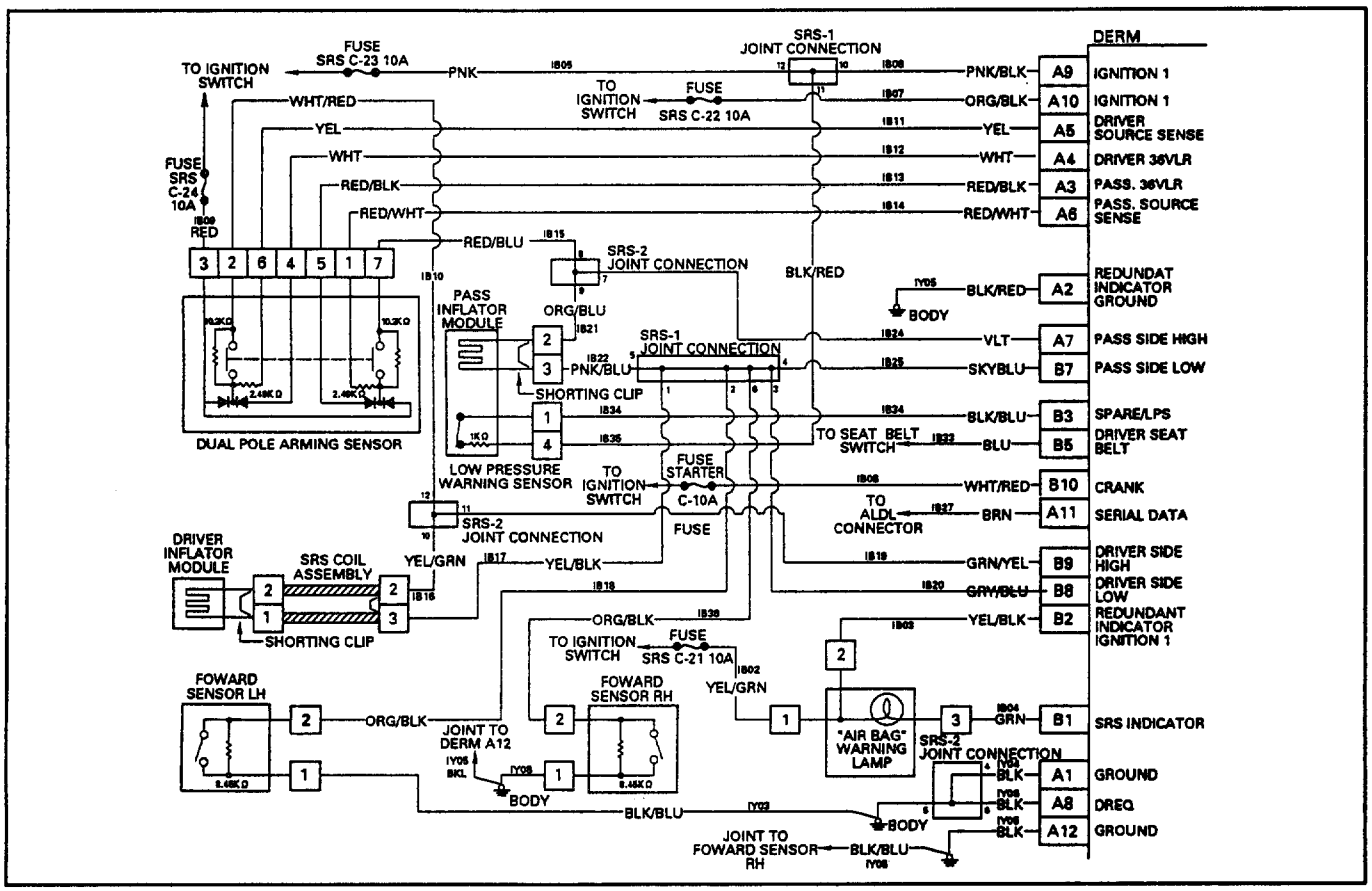

DTC 61

SRS INDICATOR CIRCUIT FAILURE

STEP	ACTION	YES	NO
1	WAS THE "SRS DIAGNOSTIC SYSTEM CHECK" PERFORMED?	GO TO STEP2.	GO TO THE "SRS DIAGNOSTIC SYSTEM CHECK."
2	MALFUNCTIONS WITHIN THE "AIR BAG" WARNING LAMP CIRCUITRY WILL SET THIS DIAGNOSTIC TROUBLE CODE. THESE MALFUNCTIONS ARE ADDRESSED IN THE "SRS DIAGNOSTIC SYSTEM CHECK" VIA CHART B AND CHART C. FAILURE TO PROPERLY PERFORM THE "SRS DIAGNOSTIC SYSTEM CHECK" MAY RESULT IN MISDIAGNOSIS OF A MALFUNCTIONING DERM. IGNITION SWITCH "ON". CLEAR SRS DIAGNOSTIC TROUBLE CODES. IS DTC 61 SET?	IGNITION SWITCH "OFF." GO TO CHART A.	REPEAT THE "SRS DIAGNOSTIC SYSTEM CHECK."

DTC 62

REDUNDANT SRS INDICATOR CIRCUIT FAILURE

CIRCUIT DESCRIPTION

When the ignition switch is first turned "ON" battery voltage is applied to the "AIR BAG" warning lamp and to the "Ignition 1" input terminals "A9" and "A10". The DERM responds by flashing the "AIR BAG" warning lamp seven times alternating between the primary and redundant lamp drivers. The DERM monitors the redundant lamp driver output by comparing the output state at "SRS Indicator" terminal "B1" to the microprocessor commanded state. When "Ignition1" is above a specified value and the output state does not match the commanded state of the redundant lamp driver for 400 milliseconds DTC 62 is set.

DTC WILL SET WHEN

"Ignition 1" voltage is above a specified value and the output state at the "SRS Indicator" terminal "B1" does not match the commanded state of the redundant lamp driver for 400 milliseconds. This test is run every 100 milliseconds during "Continuous Monitoring" tests.

ACTION TAKEN

DERM attempts to turn "ON" the "AIR BAG" warning lamp using the primary lamp driver and sets a diagnostic trouble code.

DTC WILL CLEAR WHEN

The ignition switch is turned "OFF."

DTC CHART TEST DESCRIPTION

Number(s) below refer to step number(s) on the diagnostic chart.

2. This test checks for an open in the "Redundant Indicator Ground" circuit.
3. This test determines whether the malfunction is due to an open in the "Redundant Indicator Ignition 1" circuit.

DIAGNOSTIC AIDS

An intermittent condition is likely to be caused by a poor connection to the DERM at terminal "A2" or "B2", an open in CKT IY05 or an open in CKT IB03.

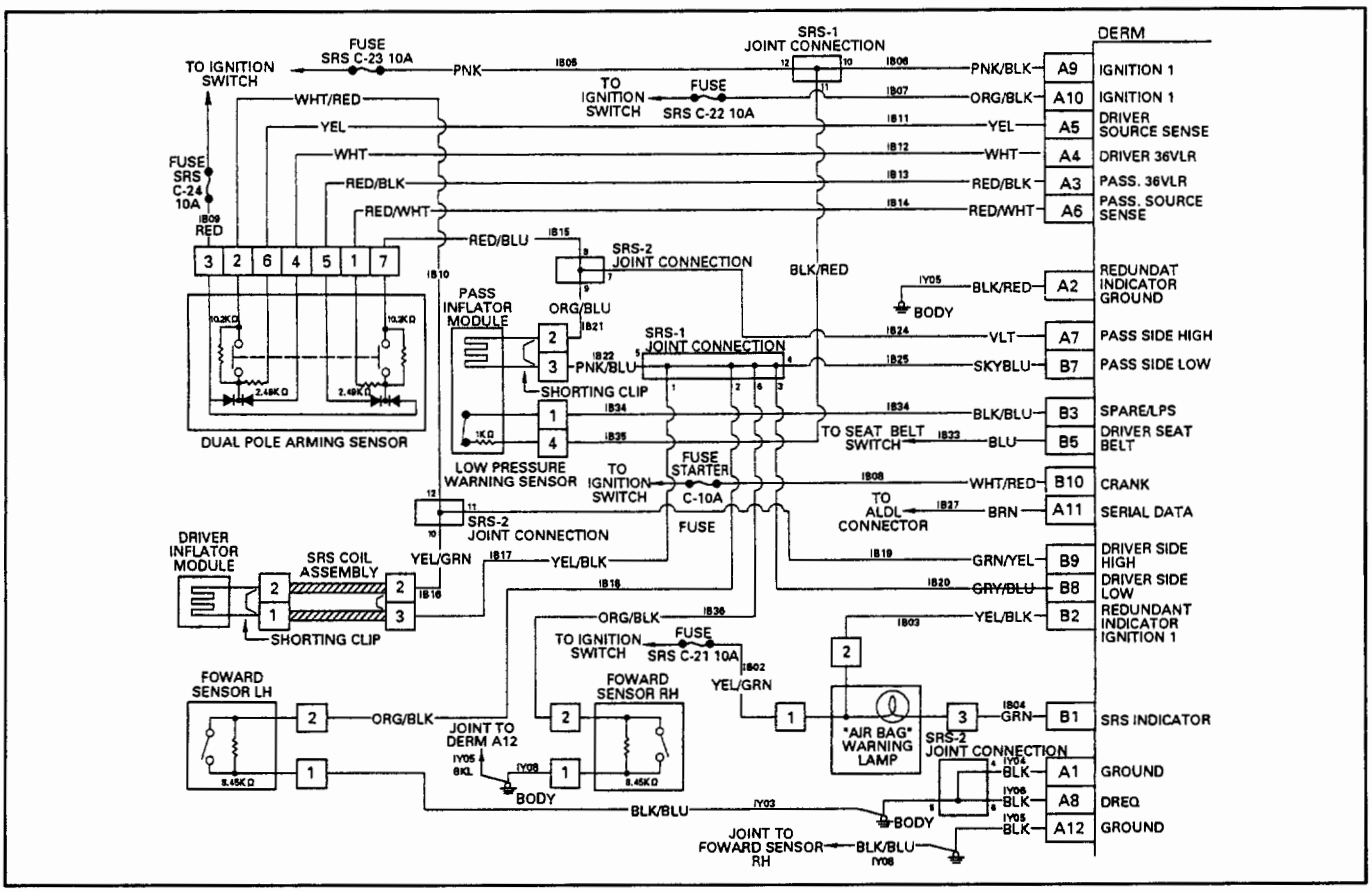

DTC 62

REDUNDANT SRS INDICATOR CIRCUIT FAILURE

STEP	ACTION	YES	NO
1	WAS THE "SRS DIAGNOSTIC SYSTEM CHECK" PERFORMED?	GO TO STEP2.	GO TO THE "SRS DIAGNOSTIC SYSTEM CHECK."
2	IS DTC 61 ALSO SET?	GO TO DTC61.	GO TO STEP3.
3	WHEN MEASUREMENTS ARE REQUESTED IN THIS CHART USE J–39200 DVM WITH CORRECT TERMINAL ADAPTER FROM J–35616–A. IGNITION SWITCH "OFF." DISCONNECT DRIVER AND PASSENGER INFLATOR MODULES, YELLOW 2–WAY OR 4–WAY CONNECTORS LOCATED AT THE TOP OF THE STEERING COLUMN AND BEHIND THE I/P COMPARTMENT DOOR ASSEMBLY. DISCONNECT DERM. CHECK FOR PROPER CONNECTION TO DERM AT TERMINAL "A2" AND AT TERMINAL "B2". IF OK THEN MEASURE RESISTANCE ON DERM HARNESS CONNECTOR FROM TERMINAL "A2" (GROUND) TO TERMINAL "A12" (GROUND). IS RESISTANCE 5.0Ω OR LESS?	GO TO STEP4.	GO TO STEP5.
4	IGNITION SWITCH "ON." MEASURE VOLTAGE ON DERM HARNESS CONNECTOR FROM TERMINAL "B2" TO TERMINAL "A12" (GROUND). IS VOLTAGE 1 VOLT OR LESS?	GO TO STEP6.	GNITION SWITCH "OFF." GO TO CHART A.
5	REPLACE SRS HARNESS.	GO TO STEP7.	
6	IGNITION SWITCH "OFF."REPLACE SRS HARNESS.	GO TO STEP7.	
7	RECONNECT ALL SRS COMPONENTS, ENSURE ALL COMPONENTS ARE PROPERLY MOUNTED. CLEAR SRS DIAGNOSTIC TROUBLE CODES. REPEAT THE "SRS DIAGNOSTIC SYSTEM CHECK."	GO TO THE "SRS DIAGNOSTIC SYSTEM CHECK".	

DTC 71 AND/OR 75

INTERNAL DERM FAULT CIRCUIT

DESCRIPTION

DTC 71 and/or DTC 75 is an indication of an internal DERM malfunction and will set if any of the following conditions are detected:1)DERM energy reserve voltage discharge time failure for three consecutive ignition cycles("Turn–ON" test), 2)DERM is unable to read from or write to EEPROM(tested during "EEPROM read/write cycle"), 3)Either "36 VLR" power supply voltage is above a specified value for 500 milliseconds ("Continuous Monitoring" test), 4)The DERM calculated number for the vehicle in which it is installed does not match the value stored in EEPROM.

DTC WILL SET WHEN

Any of the indicated malfunctions are detected by the DERM. Each of the failure conditions is tested at a different time: 1)At "Turn–ON," 2)Asynchronously, 3)During "Continuous Monitoring," 4)At "Turn–ON."

ACTION TAKEN

DERM turns "ON" the "AIR BAG" warning lamp and sets a diagnostic trouble code.

DTC WILL CLEAR WHEN

The indicated malfunctions are not detected by the DERM.

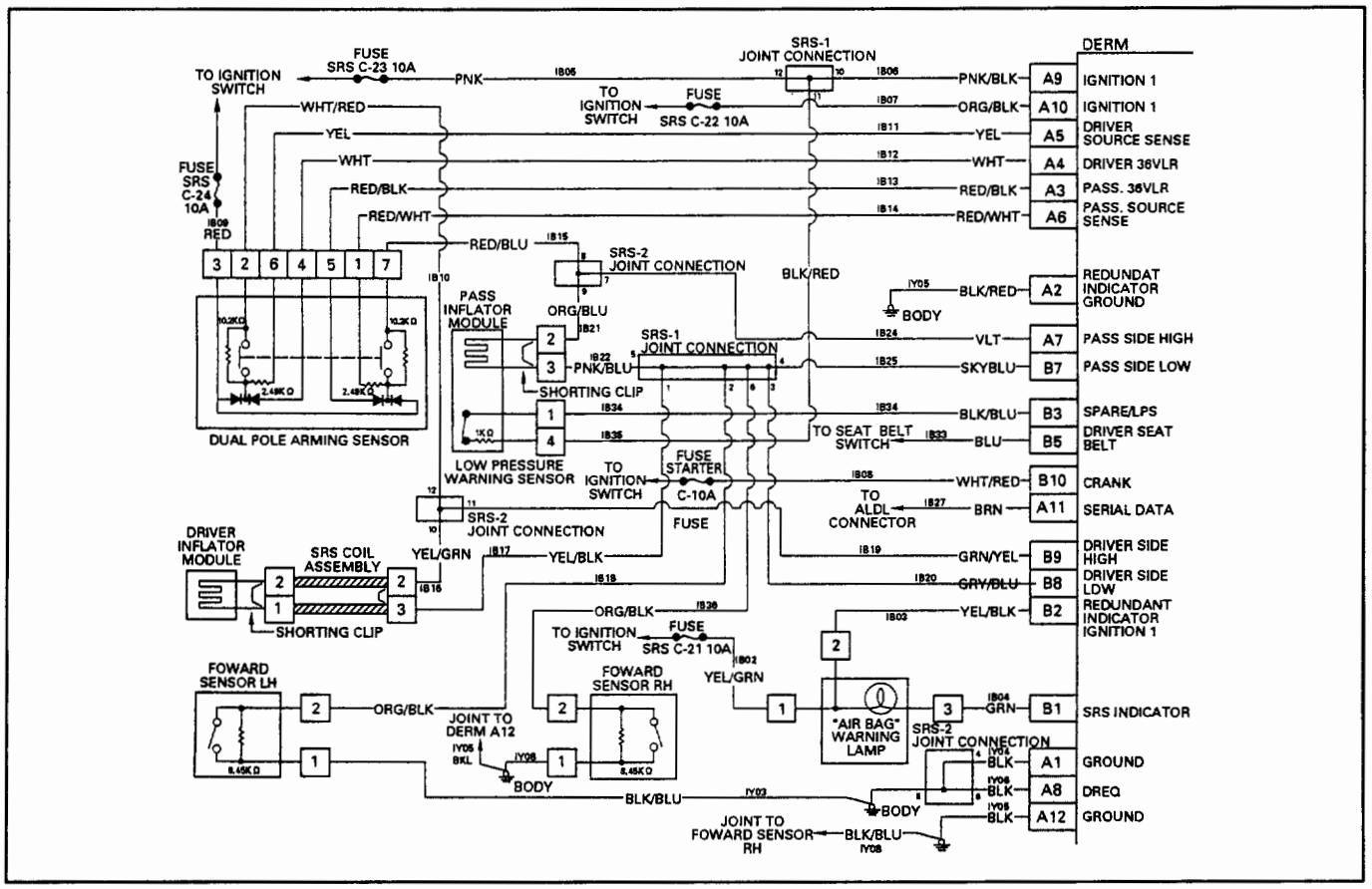

DTC 71 AND/OR 75
INTERNAL DERM FAULT

STEP	ACTION	YES	NO
1	WAS THE "SRS DIAGNOSTIC SYSTEM CHECK" PERFORMED?	REPLACE DERM. REPEAT THE "SRS DIAGNOSTIC SYSTEM CHECK."	GO TO THE "SRS DIAGNOSTIC SYSTEM CHECK."

DTC 81

DRIVER IGNITION DIODE OPEN

CIRCUIT DESCRIPTION

During the "Turn–ON" tests, performed at the beginning of each ignition cycle, the DERM delays the charging of the "Driver 36 VLR" and "Passenger 36 VLR" power supplies. While the delay is active the DERM measures the voltage at the "Driver 36 VLR" terminal "A3", "Driver Source Sense" terminal "A5", and "Passenger Source Sense" terminal "A6". When the voltage measured at the two "36 VLR" power supplies indicates they are in a discharged state, the voltage measured at "Passenger Source Sense" is within a specified range of "Ignition 1" voltage measured at "Driver Source Sense" is a specified amount below "Ignition 1" voltage DTC 81 is set.

DTC WILL SET WHEN

With both "36 VLR" power supplies in a discharged state, the DERM detects "Ignition 1" voltage at "Passenger Source Sense" terminal "A6" while simultaneously the DERM detects "Ignition 1" voltage at "Driver Source Sense" terminal "A5". This test is run once each ignition cycle during the "Turn–ON" tests while the "36 VLR Delay" is active.

ACTION TAKEN

DERM turns "ON" the "AIR BAG" warning lamp and sets a diagnostic trouble code.

DTC CHART TEST DESCRIPTION

Number(s) below refer to step number(s) on the diagnostic chart.

2. This test checks for a short from the "Driver Source Sense" circuit to the "Passenger 36 VLR" circuit.
3. This test checks for a short from the "Driver Source Sense"circuit to the "Driver 36 VLR" circuit.
4. This test determines whether the malfunction is due to open within the dual pole arming sensor.

DIAGNOSTIC AIDS

An intermittent condition is likely to be caused by a short between CKT IB11 CKT IB12, a short between CKT IB11 and CKT IB13 or an open inside the dual pole arming sensor. The test for this diagnostic trouble code is only run while the check. When a scan tool "Clear Codes" command is issued and the malfunction is still present, the DTC will not reappear until the ignition switch is turned "OFF" for at least two minutes with the entire SRS connected and then the ignition switch is turned "ON."

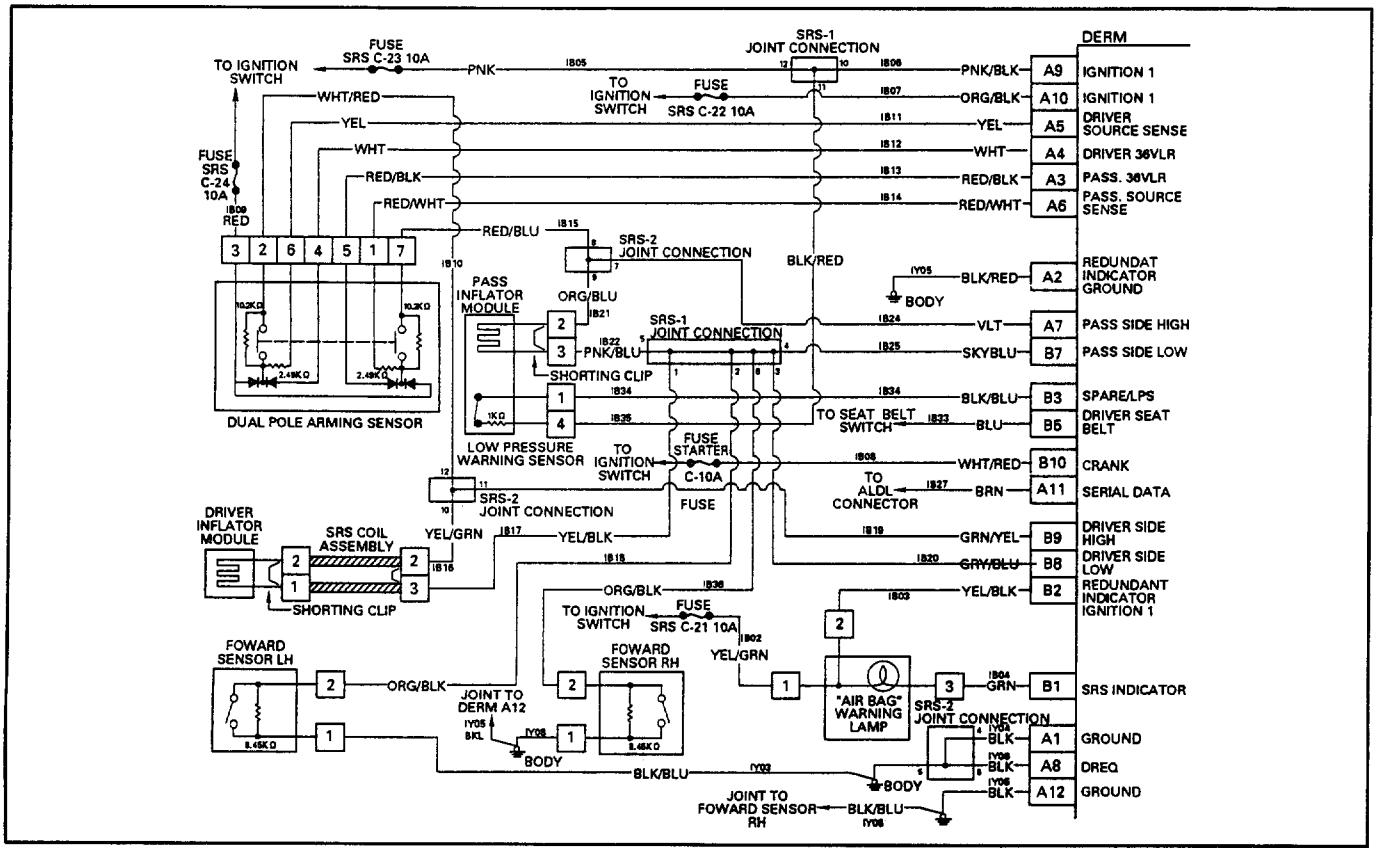

DTC 81

DRIVER IGNITION DIODE OPEN

STEP	ACTION	YES	NO
1	WAS THE "SRS DIAGNOSTIC SYSTEM CHECK" PERFORMED?	GO TO STEP2.	GO TO THE "SRS DIAGNOSTIC SYSTEM CHECK."
2	WHEN MEASUREMENTS ARE REQUESTED IN THIS CHART USE J–39200 DVM WITH CORRECT TERMINAL ADAPTER FROM J–35616–A. IGNITION SWITCH "OFF." DISCONNECT DRIVER AND PASSENGER INFLATOR MODULES, YELLOW 2–WAY OR 4–WAY CONNECTORS LOCATED AT THE TOP OF THE STEERING COLUMN AND BEHIND THE I/P COMPARTMENT DOOR ASSEMBLY. DISCONNECT DUAL POLE ARMING SENSOR. MEASURE RESISTANCE ON DUAL POLE ARMING SENSOR HARNESS CONNECTOR FROM TERMINAL "5" TO TERMINAL "6". DOES J–39200 DISPLAY "OL"(INFINITE)?	GO TO STEP3.	GO TO STEP5.
3	MEASURE RESISTANCE ON DUAL POLE ARMING SENSOR HARNESS CONNECTOR FROM TERMINAL "4" TO TERMINAL "6" . DOES J–39200 DISPLAY "OL"(INFINITE)?	GO TO STEP4.	GO TO STEP5.
4	RECONNECT DUAL POLE ARMING SENSOR. DISCONNECT DERM. IGNITION SWITCH "ON." MEASURE VOLTAGE FROM DERM HARNESS CONNECTOR TERMINAL "A5" TO TERMINAL "A1"(GROUND). IS VOLTAGE 1 VOLT OR LESS?	GO TO STEP6.	IGNITION SWITCH "OFF." GO TO CHART A.
5	REPLACE SRS HARNESS.	GO TO STEP7.	
6	IGNITION SWITCH "OFF." REPLACE DUAL POLE ARMING SENSOR.	GO TO STEP7.	
7	RECONNECT ALL SRS COMPONENTS, ENSURE ALL COMPONENTS ARE PROPERLY MOUNTED. CLEAR SRS DIAGNOSTIC TROUBLE CODES. REPEAT THE "SRS DIAGNOSTIC SYSTEM CHECK."	GO TO THE "SRS DIAGNOSTIC SYSTEM CHECK".	

DTC 82

PASSENGER IGNITION DIODE OPEN

CIRCUIT DESCRIPTION

During the "Turn–ON" tests, performed at the beginning of each ignition cycle, the DERM delays the charging of the "Driver 36 VLR" and "Passenger 36 VLR" power supplies. While the delay is active the DERM measures the voltage at the "Driver 36 VLR" terminal "A4", "Passenger 36 VLR" terminal "A3", "Driver Source Sense" terminal "A5", and "Passenger Source Sense" terminal "A6". When the voltage measured at the two "36 VLR" power supplies indicates they are in a discharged state, the voltage measured at "Driver Source Sense" is within a specified range of "Ignition 1" voltage measured at "Passenger Source Sense" is a specified amount below "Ignition 1" voltage DTC 82 is set.

DTC WILL SET WHEN

With both "36 VLR" power supplies in a discharged state, the DERM detects "Ignition 1" voltage at "Driver Source Sense" terminal "A5" while simultaneously the DERM does not detect "Ignition 1" voltage at "Passenger Source Sense" terminal "A6". This is run once each ignition cycle during the "Turn–ON" tests while the "36 VLR Delay" is active.

ACTION TAKEN

DERM turns "ON" the "AIR BAG" warning lamp and sets a diagnostic trouble code.

DTC WILL CLEAR WHEN

With both "36 VLR" power supplies in a discharged state, the voltages measured at "Driver Source Sense" terminal "A5" and "Passenger Source Sense" terminal "A6" are simultaneously within a specified range of "Ignition 1" voltage. When neither the failure nor clear conditions are met, the state of the DTC from the previous ignition cycle is used.

DTC CHART TEST DESCRIPTION

Number(s) below refer to step number(s) on the diagnostic chart.

2. This test checks for a short from the "Passenger Source Sense" circuit to the "Passenger 36 VLR" circuit.
3. This test check for a short from the "Passenger Source Sense" circuit to the "Driver 36 VLR" circuit.
4. This test determines whether the malfunction is due to an open within the dual pole arming sensor.

DIAGNOSTIC AIDS

An intermittent condition is likely to be caused by a short between CKT IB12 and CKT IB14, a short between CKT IB13 and CKT IB14, or an open inside the dual pole arming sensor. The test for this diagnostic trouble code is only run while the "AIR BAG" warning lamp is performing the bulb check. When a scan tool "Clear Codes" command is issued and the malfunction is still present, the DTC will not reappear until the ignition switch is turned "OFF" for at least two minutes with the entire SRS connected and then the ignition switch is turned "ON."

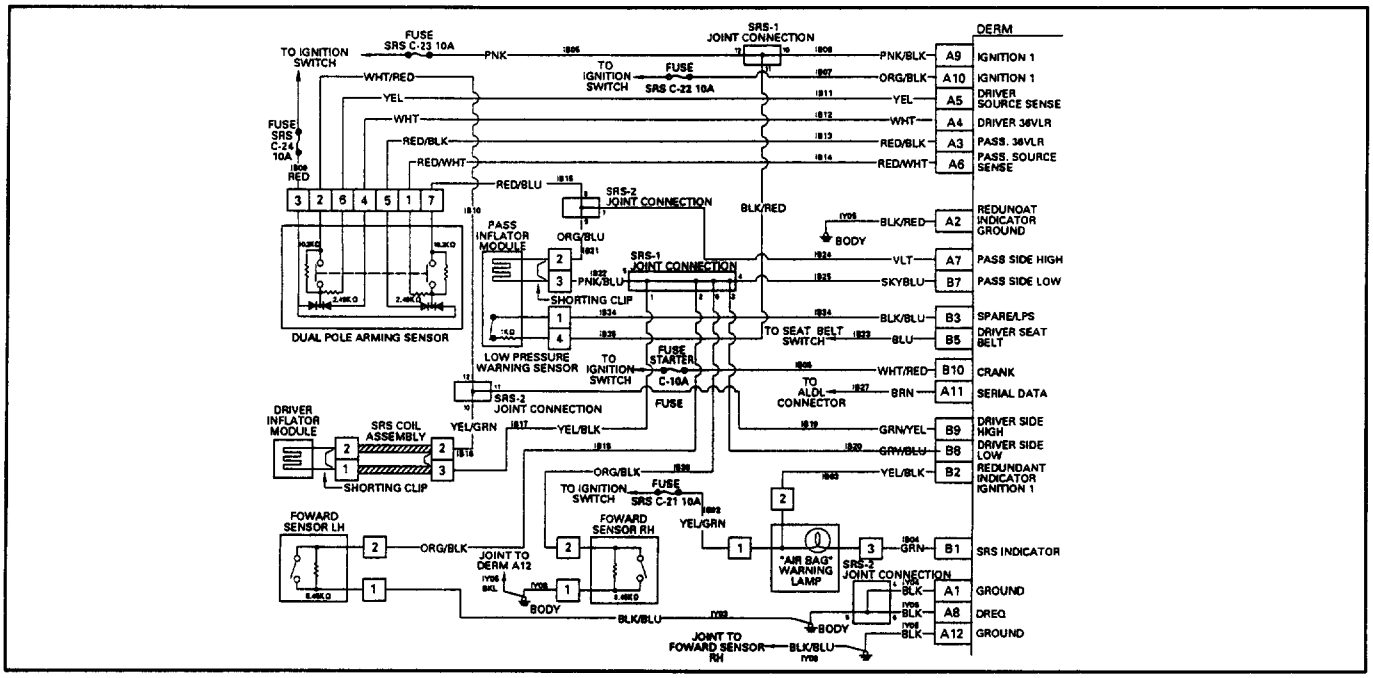

DTC 82

PASSENGER IGNITION DIODE OPEN

STEP	ACTION	YES	NO
1	WAS THE "SRS DIAGNOSTIC SYSTEM CHECK" PERFORMED?	GO TO STEP2.	GO TO THE "SRS DIAGNOSTIC SYSTEM CHECK."
2	WHEN MEASUREMENTS ARE REQUESTED IN THIS CHART USE J–39200 DVM WITH CORRECT TERMINAL ADAPTER FROM J–35616–A. IGNITION SWITCH "OFF." DISCONNECT DRIVER AND PASSENGER INFLATOR MODULES, YELLOW 2–WAY OR 4–WAY CONNECTORS LOCATED AT THE TOP OF THE STEERING COLUMN AND BEHIND THE I/P COMPARTMENT DOOR ASSEMBLY. DISCONNECT DUAL POLE ARMING SENSOR. MEASURE RESISTANCE ON DUAL POLE ARMING SENSOR HARNESS CONNECTOR FROM TERMINAL "1" TO TERMINAL "5". DOES J–39200 DISPLAY "OL"(INFINITE)?	GO TO STEP3.	GO TO STEP5
3	MEASURE RESISTANCE ON DUAL POLE ARMING SENSOR HARNESS CONNECTOR FROM TERMINAL "1" TO TERMINAL "4". DOES J–39200 DISPLAY "OL"(INFINITE)?	GO TO STEP4.	GO TO STEP5.
4	RECONNECT DUAL POLE ARMING SENSOR. DISCONNECT DERM. IGNITION SWITCH "ON." MEASURE VOLTAGE FROM DERM HARNESS CONNECTOR TERMINAL "A6" TO TERMINAL "A1"(GROUND). IS VOLTAGE 1 VOLT OR LESS?	GO TO STEP6.	IGNITION SWITCH "OFF." GO TO CHART A.
5	REPLACE SRS HARNESS.	GO TO STEP7.	
6	IGNITION SWITCH "OFF." REPLACE DUAL POLE ARMING SENSOR.	GO TO STEP7.	
7	RECONNECT ALL SRS COMPONENTS, ENSURE ALL COMPONENTS ARE PROPERLY MOUNTED. CLEAR SRS DIAGNOSTIC TROUBLE CODES. REPEAT THE "SRS DIAGNOSTIC SYSTEM CHECK."	GO TO THE "SRS DIAGNOSTIC SYSTEM CHECK".	

HISTORY DTC 83

DRIVER RESERVE DIODE SHORTED

CIRCUIT DESCRIPTION

During the "Turn–ON" tests, performed at the beginning of each ignition cycle, the DERM delays the charging of the "Driver 36 VLR" power supplies. While the delay is active the DERM measures the voltage at the "Driver 36 VLR" terminal "A4", "Passenger 36 VLR" terminal "A3", "Driver Source Sense" terminal "A5", and "Passenger Source Sense" terminal "A6". When the driver reserve diode is shorted "Ignition 1" voltage is measured at "Driver 36 VLR" from the forward biases driver ignition diode. When the voltage measured at "driver 36 VLR" is within a specified range of "Ignition 1" voltage for eight consecutive "Turn–ON" tests history DTC 83 is set.

DTC WILL SET WHEN

The voltage measured at "Driver 36 VLR" terminal "A4" is within a specified range of "Ignition 1"voltage for eight consecutive "Turn–ON" tests and no "higher priority faults" are detected. This test is run once each ignition during the "Turn–ON" test while the "36 VLR delay" is active.

ACTION TAKEN

DERM sets a history diagnostic trouble code.

DTC WILL CLEAR WHEN

The voltage measured at "Driver 36 VLR" terminal "A4" indicated that the power supply is in a discharged state during "Turn–ON" tests.

DTC CHART TEST DESCRIPTION

Number(s) below refer to step number(s) on the diagnostic chart.

2. This test determines whether the malfunction is due to a shorted driver reserve diode within the dual pole arming sensor.

DIAGNOSTIC AIDS

This diagnostic trouble code will not set as a current DTC. Therefore follow the DTC chart to diagnose a history DTC 83.

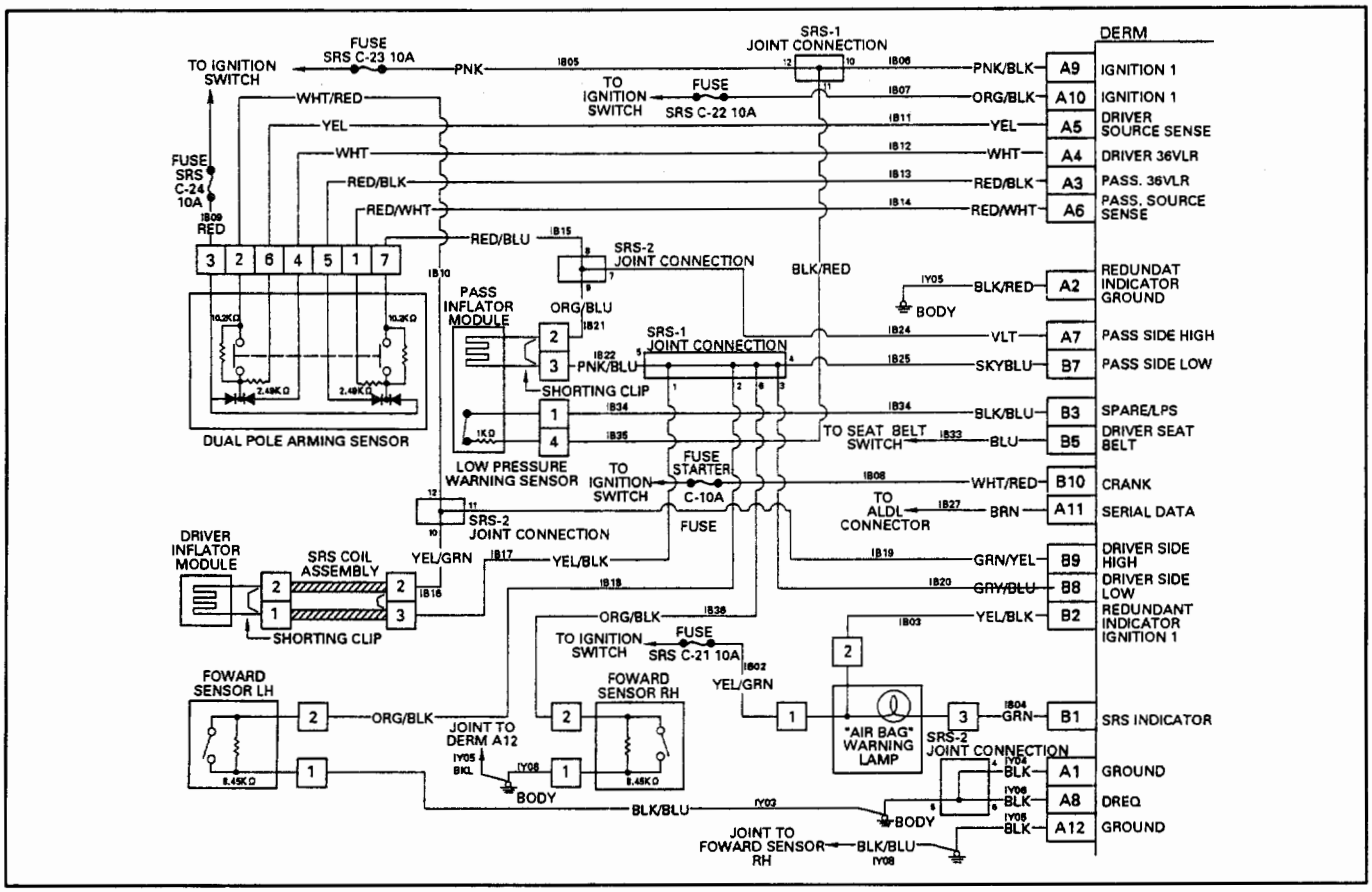

HISTORY DTC 83

DRIVER RESERVE DIODE SHORTED

STEP	ACTION	YES	NO
1	WAS THE "SRS DIAGNOSTIC SYSTEM CHECK" PERFORMED?	GO TO STEP2.	GO TO THE "SRS DIAGNOSTIC SYSTEM CHECK."
2	WHEN MEASUREMENTS ARE REQUESTED IN THIS CHART USE J–39200 DVM WITH CORRECT TERMINAL ADAPTER FROM J–35616–A. IGNITION SWITCH "OFF." DISCONNECT DRIVER AND PASSENGER INFLATOR MODULES, YELLOW 2–WAY OR 4–WAY CONNECTORS LOCATED AT THE TOP OF THE STEERING COLUMN AND BEHIND THE I/P COMPARTMENT DOOR ASSEMBLY. DISCONNECT DERM. IGNITION SWITCH "ON." MEASURE VOLTAGE ON DERM HARNESS CONNECTOR TERMINAL "A4" TO TERMINAL "A1"(GROUND). IS VOLTAGE 1 VOLT OR LESS?	IGNITION SWITCH "OFF." GO TO CHART A.	IGNITION SWITCH "OFF." REPLACE DUAL POLE ARMING SENSOR. GO TO STEP3.
3	RECONNECT ALL SRS COMPONENTS, ENSURE ALL COMPONENTS ARE PROPERLY MOUNTED. CLEAR SRS DIAGNOSTIC TROUBLE CODES. REPEAT THE "SRS DIAGNOSTIC SYSTEM CHECK."	GO TO THE "SRS DIAGNOSTIC SYSTEM CHECK".	

HISTORY DTC 84

PASSENGER RESERVE DIODE SHORTED

CIRCUIT DESCRIPTION

During the "Turn–ON" tests, preformed at the beginning of each ignition cycle, the DERM delays charging of the "Driver 36 VLR" and "Passenger 36 VLR" power supplies. While the delay is active the DERM measures the voltage at the "Driver 36 VLR" terminal "A4", "Passenger 36 VLR" terminal "A3", "Driver Source Sense" terminal "A5" and "Passenger Source Sense" terminal "A6". When the passenger reserve diode is shorted "Ignition 1" voltage measured at "Passenger 36 VLR" is within a specified range of "Ignition 1" voltage for eight consecutive "Turn–ON" tests history DTC84 is set.

DTC WILL SET WHEN

The voltage measured at "Passenger 36 VLR" terminal "A3" is within a specified range of "Ignition 1" voltage for eight consecutive "Turn–ON" tests and no higher priority faults are detected. This test is run once each ignition cycle during the "Turn–ON" test while the "36 VLR Delay" is active.

ACTION TAKEN

DERM sets a history diagnostic trouble code.

DTC WILL CLEAR WHEN

The voltage measured at "Passenger 36 VLR" terminal "A3" indicates that the power supply is in a discharged state during "Turn–ON" tests.

DTC CHART TEST DESCRIPTION

Number(s) below refer to step number(s) on the diagnostic chart.

2. This test determines whether the malfunction is due to a shorted passenger reserve diode within the dual pole arming sensor.

DIAGNOSTIC AIDS

This diagnostic trouble code will not set as a current DTC. Therefore follow the DTC chart to diagnose a history DTC 84.

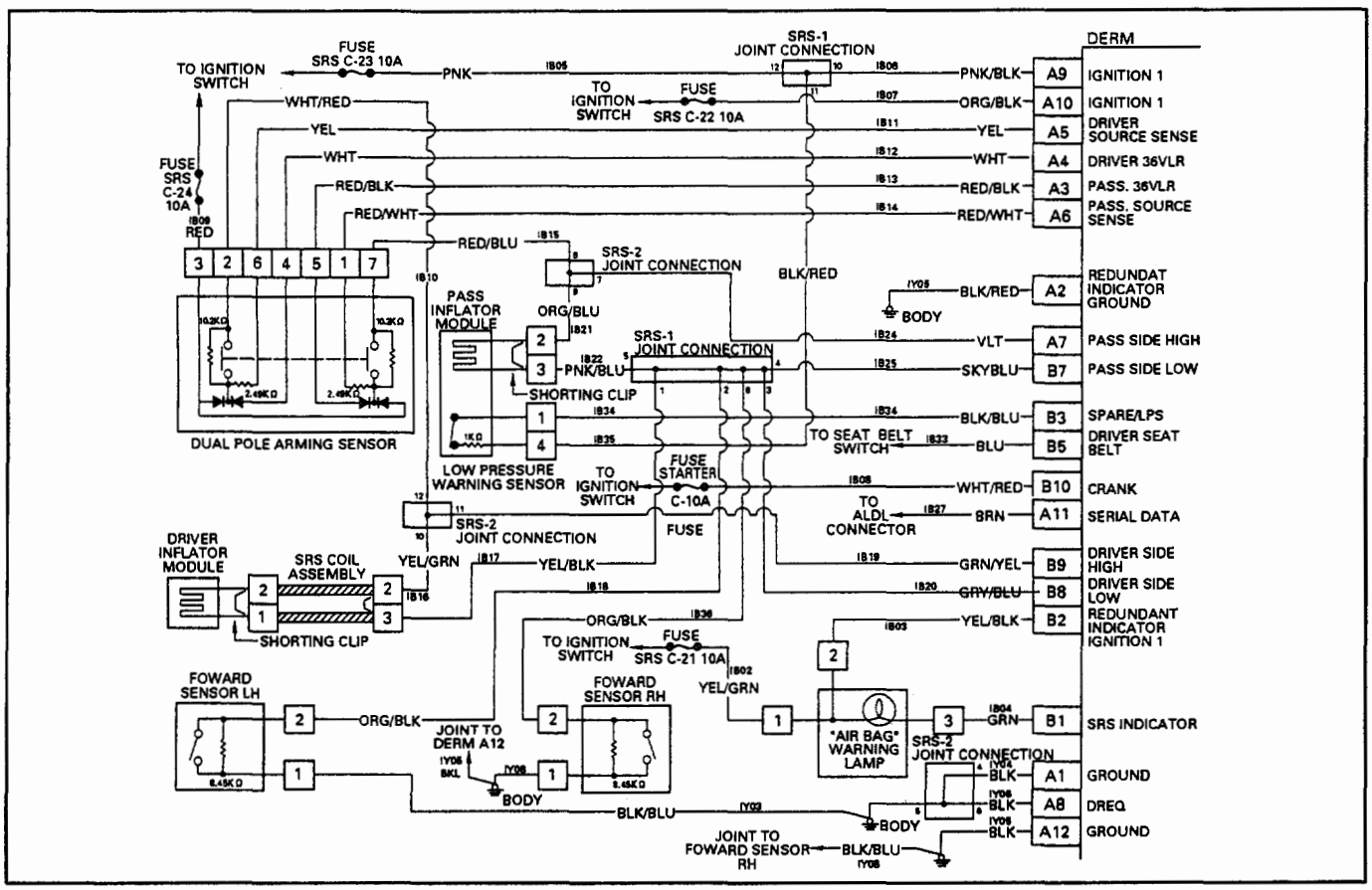

HISTORY DTC 84

PASSENGER RESERVE DIODE SHORTED

STEP	ACTION	YES	NO
1	WAS THE "SRS DIAGNOSTIC SYSTEM CHECK" PERFORMED?	GO TO STEP2.	GO TO THE "SRS DIAGNOSTIC SYSTEM CHECK."
2	WHEN MEASUREMENTS ARE REQUESTED IN THIS CHART USE J-39200 DVM WITH CORRECT TERMINAL ADAPTER FROM J-35616-A. IGNITION SWITCH "OFF." DISCONNECT DRIVER AND PASSENGER INFLATOR MODULES, YELLOW 2-WAY OR 4-WAY CONNECTORS LOCATED AT THE TOP OF THE STEERING COLUMN AND BEHIND THE I/P COMPARTMENT DOOR ASSEMBLY. DISCONNECT DERM. IGNITION SWITCH "ON." MEASURE VOLTAGE FROM DERM HARNESS CONNECTOR TERMINAL "A3" TO TERMINAL "A1"(GROUND). IS VOLTAGE 1 VOLT OR LESS?	IGNITION SWITCH "OFF." GO TO CHART A.	IGNITION SWITCH "OFF." REPLACE DUAL POLE ARMING SENSOR. GO TO STEP3.
3	RECONNECT ALL SRS COMPONENTS, ENSURE ALL COMPONENTS ARE PROPERLY MOUNTED. CLEAR SRS DIAGNOSTIC TROUBLE CODES. REPEAT THE "SRS DIAGNOSTIC SYSTEM CHECK."	GO TO THE "SRS DIAGNOSTIC SYSTEM CHECK".	

BRANK PAGE

TABLE OF CONTENTS

SUPPLEMENTAL RESTRAINT SYSTEM (SRS)

SECTION 3 – SERVICE

CAUTION: WHEN FASTENERS ARE REMOVED, ALWAYS REINSTALL THEM AT THE SAME LOCATION FROM WHICH THEY WERE REMOVED. IF A FASTENER NEEDS TO BE REPLACED, USE THE CORRECT PART NUMBER FASTENER FOR THAT APPLICATION. IF THE CORRECT PART NUMBER FASTENER IS NOT AVAILABLE, A FASTENER OF EQUAL SIZE AND STRENGTH (OR STRONGER) MAY BE USED. FASTENERS THAT ARE NOT REUSED, AND THOSE REQUIRING THREAD LOCKING COMPOUND WILL BE CALLED OUT. THE CORRECT TORQUE VALUE MUST BE USED WHEN INSTALLING FASTENERS THAT REQUIRE IT. IF THE ABOVE CONDITIONS ARE NOT FOLLOWED, PARTS OR SYSTEM DAMAGE COULD RESULT.

SERVICE PRECAUTIONS 117
- Disabling the SRS 117
- Enabling the SRS 117
- Handling/Installation/Diagnosis 117
- Inspections Required After Accident 117

DIAGNOSTIC ENERGY RESERVE MODULE (DERM) 119
DISCRIMINATING SENSOR - FORWARD SENSOR LH 120
DISCRIMINATING SENSOR – FORWARD SENSOR RH 121
DUAL POLE ARMING SENSOR 122
DRIVER INFLATOR MODULE 124
STEERING WHEEL 125
SRS COIL ASSEMBLY 127
STEERING COLUMN 129
PASSENGER INFLATOR MODULE 132
SPECIFICATION 133

BLANK PAGE

SERVICE PRECAUTIONS

CAUTION: WHEN PERFORMING SERVICE ON OR AROUND SRS COMPONENTS OR SRS WIRING, FOLLOW THE PROCEDURES LISTED BELOW TO TEMPORARILY DISABLE THE SRS. FAILURE TO FOLLOW PROCEDURES COULD RESULT IN POSSIBLE AIR BAG DEPLOYMENT, PERSONAL INJURY OR OTHERWISE UNNEEDED SRS REPAIRS.

The DERM in Driver–Passenger SRS can maintain sufficient voltage to cause a deployment for up to 2 minutes after the ignition switch is turned to "OFF," the battery is disconnected, or the fuse powering the DERM is removed.

Many of the service procedures require removal of the "AIR BAG" fuse, and disconnection of the inflator modules from the deployment loop to avoid an accidental deployment. If the inflator module is disconnected from the deployment loop as noted in the "Disabling the SRS" procedure that follows, service can begin immediately without waiting for the 2 minute time period to expire.

DISABLING THE SRS

REMOVAL

- Turn the steering wheel so that the vehicle's wheels are pointing straight ahead.
- Turn the ignition switch to "OFF"

1. Remove SRS fuse C-21, C-22, C-23 and C-24 from left dash side lower fuse block.
2. Disconnect yellow 3–way connector at the base of the steering column.
3. Remove I/P compartment door assembly, Refer to "Passenger inflator module replacement" in section 9J-135.
4. Disconnect yellow 4–way connector behind the I/P compertment door assembly.

NOTE

- With the "AIR BAG" fuse removed and ignition switch "ON," the "AIR BAG" warning lamp will be "ON." This is normal operation and does not indicate an SRS malfunction.

ENABLING THE SRS

INSTALLATION

Turn ignition switch to "LOCK" and remove key.

1. Connect yellow 4–way connector of passenger inflator module.
2. Install I/P compartment door assembly, Refer to "Passenger inflotor module replacement" in section 9J-3.
3. Connect yellow 3–way connector at the base of the steering column.
4. Install "AIR BAG" fuse C-21, C-22, C-23 and C-24 to left dash side lower fuse block.

Turn ignition switch to "RUN" and verify that the "AIR BAG" warning lamp flashes seven times and then turns "OFF" If it does not operate as described, perform the "SRS Diagnostic System Check" in section 9J–32.

HANDLING/INSTALLATION/DIAGNOSIS

1. Inflator modules should not be subjected to temperatures above 65°C(150°F).
2. Discriminating sensors, inflator modules, arming sensors, or DERMs should not be used if they have been dropped from a height of 100 centimeters (3.28 feet) or more.
3. When a discriminating sensor or arming sensor is replaced, it MUST be oriented with the arrow on the sensor pointing toward the front of the vehicle. It is very important for the discriminating sensors and arming sensor to be located flat on the mounting surface, parallel to the vehicle datum line. It is important that the sensor mounting surface is free of any dirt or other foreign material.
4. Do not apply power to the SRS unless all components are connected or a diagnostic chart requests it, as this will set a diagnostic trouble code.
5. The "SRS Diagnostic System Check" must be the starting point of any SRS diagnostics. The "SRS Diagnostic System Check" will verify proper "AIR BAG" warning lamp operation and will lead you to the correct chart to diagnose any SRS malfunctions. Bypassing these procedures may result in extended diagnostic time, incorrect diagnosis, and incorrect parts replacements.

INSPECTIONS REQUIRED AFTER ACCIDENT

CAUTION: CERTAIN SRS COMPONENTS MUST BE REPLACED AFTER A FRONTAL CRASH INVOLVING AIR BAG DEPLOYMENT.

In all types of accident regardless of "Air Bag" deployment, visually inspect all the following components and their points and replace as required:
- Passenger Inflator Module
- Steering wheel
- SRS coil assembly
- Steering column
- Knee bolster and Instrument panel mounting

attachments
- Driver seat and belt
- Passenger seat and belt
- Dual Pole Arming Sensor
- Discriminating Sensors
- DERM

The sensor replacement policy specifies mandatory replacement of the sensors, after crash involving AIR BAG deployment. If AIR BAG has not been deployd, Replace the sensors in the area of accident damage only.

The "area of accident damage" is defined as that area of the vehicle which is crushed, bent ,or damaged in other ways. An example might be a front–end collision in which the forward portions of the vehicle have contacted another vehicle, tree, guardrail,etc. In this example,
1) If AIR BAG has deployed, All Sensor should be replaced.
2) If AIR BAG has not deployed, replace the sensors in the area of accident damage only.
sensor(s) on the radiator tie bar would require replacement, since that portion of the vehicle was damaged in the accident. The Dual Pole Arming Sensor would not require mandatory replacement. Of course, if the DERM sets a code and the diagnostic chart leads to a faulty sensor that was not in the area of accident damage, that sensor should also be replaced.Sensors in the area of accident damage should be replaced even if those sensors do not appear to be damaged. Do not attempt to determine whether a sensor is OK— ALWAYS replace it if it is in the area of accident damage.Also, if a sensor is in an area of accident damage,but the SRS has NOT been deployed,replace the sensor.The sensor bracket may be slightly bent,wiring may be damaged,etc., and the sensor might not work properly in another collision. Again, do not attempt to determine whether a sensor is OK – –ALWAYS replace it if it is in the area of accident damage.

Also, inspect SRS coil assembly wiring and steering wheel for any signs of scorching, melting, or damage due to excessive heat. If the coil assembly wire or steering wheel is damaged, replace them. The steering column and wheel must be dimensionally checked to determine if they are damaged. Refer to in this Section 3 of this manual.

Never use SRS parts from another vehicle. This does not include remanufactured parts purchased from an authorized ISUZU Dealer; they may be used for SRS repairs.

Do not attempt to repair the forward discriminating sensors ,the dual pole arming senor, the DERM, the SRS coil assembly, the inflator modules,the steering wheel, or the steering column. Service of these items is replacement only. Verify replacement part numbers.

CAUTION: PROPER OPERATION OF THE SENSORS AND SUPPLEMENTAL RESTRAINT SYSTEM(SRS)REQUIRES THAT ANY REPAIRS TO THE VEHICLE STRUCTURE RETURN IT TO ITS ORIGINAL PRODUCTION CONFIGURATION.

DIAGNOSTIC ENERGY RESERVE MODULE

WARNING: DURING SERVICE PROCEDURES, BE VERY CAREFUL WHEN HANDLING A SENSOR. NEVER STRIKE OR JAR A SENSOR. UNDER SOME CIRCUMSTANCES, IT COULD CAUSE DEPLOYMENT AND RESULT IN PERSONAL INJURY OR IMPROPER OPERATION OF THE SUPPLEMENTAL RESTRAINT SYSTEM(SRS). ALL SENSOR AND MOUNTING BRACKET BOLTS MUST BE CAREFULLY TORQUED TO ASSURE PROPER OPERATION. NEVER POWER UP THE SRS WHEN ANY SENSOR IS NOT RIGIDLY ATTACHED TO VEHICLE, SINCE THE SENSOR COULD BE ACTIVATED WHEN NOT ATTACHED AND COULD RESULT IN DEPLOYMENT.

WARNING: PROPER OPERATION OF THE SENSORS AND SUPPLEMENTAL RESTRAINT SYSTEM(SRS) REQUIRES THAT ANY REPAIRS TO THE VEHICLE STRUCTURE RETURN IT TO ITS ORIGINAL PRODUCTION CONFIGURATION. DEPLOYMENT (CURRENT CODE 51)OR ANY VISIBLE DAMAGE TO SENSOR AND/OR THEIR MOUNTING BRACKETS REQUIRES REPLACEMENT, NOT REPAIR. PROPER OPERATION OF A SENSOR ALSO REQUIRES THAT SENSOR BE RIGIDLY BOLTED TO THE VEHICLE STRUCTURE.THE ARROW ON THE SENSOR MUST BE POINTING TOWARD THE FRONT OF THE VEHICLE. FAILURE TO OBSERVE THESE PRECAUTIONS CAN RESULT IN IMPROPER SRS OPERATION AND POSSIBLE LACK OF SUPPLEMENTAL RESTRAINT PROTECTION FOR THE DRIVER AND PASSENGER DURING AN ACCIDENT IMPACT.

All sensors are specifically calibrated and are keyed to the sensor location and SRS wiring harness. Caution should be used to ensure proper location of the sensors. The keying of the sensor to their locations and wiring harness connectors should never be modified in the filed.

REMOVAL

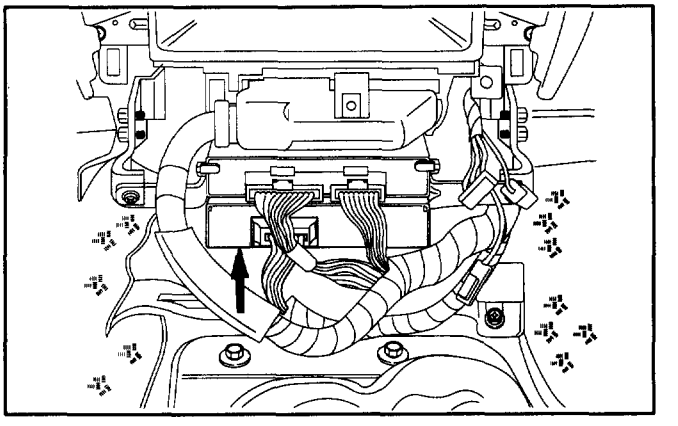

1. Disable the SRS. (Refer to "Disabling the SRS " in this section.)
2. Remove the transmission knob(for M/T) and transfer control knob.
3. Remove front console assembly and disconnect the wiring harness connector.
4. Pull lock tab up and push connector lock down to disconnect connector.
5. Remove three DERM fixing screws and DERM.

INSTALLATION

1. Install DERM into bracket and fixing screws.
2. Connect DERM connector and push lock tab down.
3. Install front console assembly and connect the wiring harness connector.
4. Install the transmission knob(for M/T) and transfer control knob.
5. Enable the SRS (Refer to "Enabling the SRS" in this section.).

DISCRIMINATING SENSOR - FORWARD SENSOR LH

WARNING: DURING SERVICE PROCEDURES, BE VERY CAREFUL WHEN HANDLING A SENSOR. NEVER STRIKE OR JAR A SENSOR. UNDER SOME CIRCUMSTANCES, IT COULD CAUSE DEPLOYMENT AND RESULT IN PERSONAL INJURY OR IMPROPER OPERATION OF THE SUPPLEMENTAL RESTRAINT SYSTEM(SRS). ALL SENSOR AND MOUNTING BRACKET BOLTS MUST BE CAREFULLY TORQUED TO ASSURE PROPER OPERATION. NEVER POWER UP THE SRS WHEN ANY SENSOR IS NOT RIGIDLY ATTACHED TO VEHICLE, SINCE THE SENSOR COULD BE ACTIVATED WHEN NOT ATTACHED AND COULD RESULT IN DEPLOYMENT.

WARNING: PROPER OPERATION OF THE SENSORS AND SUPPLEMENTAL RESTRAINT SYSTEM(SRS) REQUIRES THAT ANY REPAIRS TO THE VEHICLE STRUCTURE RETURN IT TO ITS ORIGINAL PRODUCTION CONFIGURATION. DEPLOYMENT (CURRENT CODE 51)OR ANY VISIBLE DAMAGE TO SENSOR AND/OR THEIR MOUNTING BRACKETS REQUIRES REPLACEMENT, NOT REPAIR. PROPER OPERATION OF A SENSOR ALSO REQUIRES THAT SENSOR BE RIGIDLY BOLTED TO THE VEHICLE STRUCTURE.THE ARROW ON THE SENSOR MUST BE POINTING TOWARD THE FRONT OF THE VEHICLE. FAILURE TO OBSERVE THESE PRECAUTIONS CAN RESULT IN IMPROPER SRS OPERATION AND POSSIBLE LACK OF SUPPLEMENTAL RESTRAINT PROTECTION FOR THE DRIVER AND PASSENGER DURING AN ACCIDENT IMPACT.

All sensors are specifically calibrated and are keyed to the sensor location and SRS wiring harness. Caution should be used to ensure proper location of the sensors. The keying of the sensor to their locations and wiring harness connectors should never be modified in the filed.

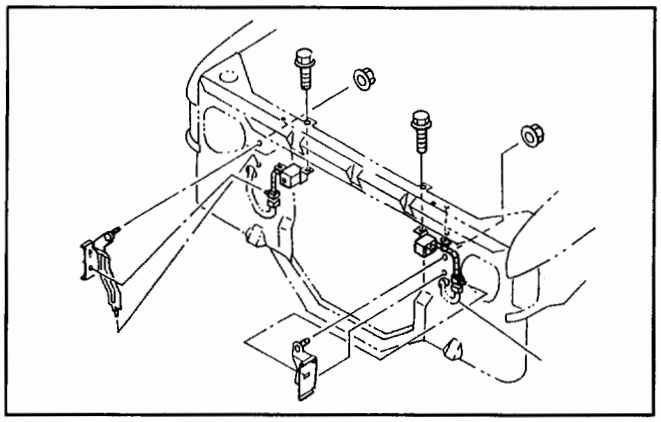

REMOVAL

1. Disable the SRS. (Refer to "Disabling the SRS " in this section.)
2. Remove front grille.
3. Remove Head lamp Assembly.
4. Remove receiver drier bracket fixing bolt.
5. Remove front end engine hood stay fixing bolts.
6. Remove harness clip.
7. Disconnect harness connector.
8. Remove forward sensor fixing bolts and forward sensor LH.

INSTALLATION

1. Install forward sensor LH and fixing bolts and tighten to specified torque.
   Torque: 30N·m(22 lb·ft.).
2. Connect harness connector.
3. Install harness clip.
4. Install front end engine hood stay fixing bolts.
5. Install condenser fixing bolts.
6. Install Head Lamp Assembly.
7. Install front grille.
8. Enable the SRS (Refer to "Enabling the SRS" in this section.).

DISCRIMINATING SENSOR – FORWARD SENSOR RH

WARNING: DURING SERVICE PROCEDURES, BE VERY CAREFUL WHEN HANDLING A SENSOR. NEVER STRIKE OR JAR A SENSOR. UNDER SOME CIRCUMSTANCES, IT COULD CAUSE DEPLOYMENT AND RESULT IN PERSONAL INJURY OR IMPROPER OPERATION OF THE SUPPLEMENTAL RESTRAINT SYSTEM(SRS). ALL SENSOR AND MOUNTING BRACKET BOLTS MUST BE CAREFULLY TORQUED TO ASSURE PROPER OPERATION. NEVER POWER UP THE SRS WHEN ANY SENSOR IS NOT RIGIDLY ATTACHED TO VEHICLE, SINCE THE SENSOR COULD BE ACTIVATED WHEN NOT ATTACHED AND COULD RESULT IN DEPLOYMENT.

WARNING: PROPER OPERATION OF THE SENSORS AND SUPPLEMENTAL RESTRAINT SYSTEM(SRS) REQUIRES THAT ANY REPAIRS TO THE VEHICLE STRUCTURE RETURN IT TO ITS ORIGINAL PRODUCTION CONFIGURATION. DEPLOYMENT (CURRENT CODE 51)OR ANY VISIBLE DAMAGE TO SENSOR AND/OR THEIR MOUNTING BRACKETS REQUIRES REPLACEMENT, NOT REPAIR. PROPER OPERATION OF A SENSOR ALSO REQUIRES THAT SENSOR BE RIGIDLY BOLTED TO THE VEHICLE STRUCTURE.THE ARROW ON THE SENSOR MUST BE POINTING TOWARD THE FRONT OF THE VEHICLE. FAILURE TO OBSERVE THESE PRECAUTIONS CAN RESULT IN IMPROPER SRS OPERATION AND POSSIBLE LACK OF SUPPLEMENTAL RESTRAINT PROTECTION FOR THE DRIVER AND PASSEMGER DURING AN ACCIDENT IMPACT.

All sensors are specifically calibrated and are keyed to the sensor location and SRS wiring harness. Caution should be used to ensure proper location of the sensors. The keying of the sensor to their locations and wiring harness connectors should never be modified in the filed.

REMOVAL

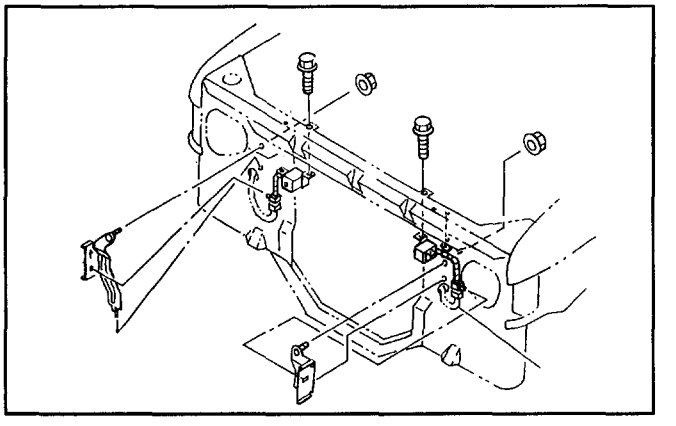

1. Disable the SRS. (Refer to "Disabling the SRS " in this section.)
2. Remove front grille.
3. Remove Head lamb Assembly.
4. Remove condenser fixing bolts.
5. Remove front end engine hood stay fixing bolts.
6. Remove harness clip.
7. Disconnect harness connector.
8. Remove forward sensor fixing bolts and forward sensor RH.

INSTALLATION

1. Install forward sensor RH and fixing bolts and tighten to specified torque.
   Torque: 30N·m(22 lb·ft.).
2. Connect harness connector.
3. Install harness clip.
4. Install front end engine hood stay fixing bolts.
5. Install condenser fixing bolts.
6. Install Head Lamb Assembly.
7. Install front grille.
8. Enable the SRS (Refer to "Enabling the SRS" in this section.).

DUAL POLE ARMING SENSOR

WARNING: DURING SERVICE PROCEDURES, BE VERY CAREFUL WHEN HANDLING A SENSOR. NEVER STRIKE OR JAR A SENSOR. UNDER SOME CIRCUMSTANCES, IT COULD CAUSE DEPLOYMENT AND RESULT IN PERSONAL INJURY OR IMPROPER OPERATION OF THE SUPPLEMENTAL RESTRAINT SYSTEM(SRS). ALL SENSOR AND MOUNTING BRACKET BOLTS MUST BE CAREFULLY TORQUED TO ASSURE PROPER OPERATION. NEVER POWER UP THE SRS WHEN ANY SENSOR IS NOT RIGIDLY ATTACHED TO VEHICLE, SINCE THE SENSOR COULD BE ACTIVATED WHEN NOT ATTACHED AND COULD RESULT IN DEPLOYMENT.

WARNING: PROPER OPERATION OF THE SENSORS AND SUPPLEMENTAL RESTRAINT SYSTEM(SRS) REQUIRES THAT ANY REPAIRS TO THE VEHICLE STRUCTURE RETURN IT TO ITS ORIGINAL PRODUCTION CONFIGURATION. DEPLOYMENT (CURRENT CODE 51)OR ANY VISIBLE DAMAGE TO SENSOR AND/OR THEIR MOUNTING BRACKETS REQUIRES REPLACEMENT, NOT REPAIR. PROPER OPERATION OF A SENSOR ALSO REQUIRES THAT SENSOR BE RIGIDLY BOLTED TO THE VEHICLE STRUCTURE.THE ARROW ON THE SENSOR MUST BE POINTING TOWARD THE FRONT OF THE VEHICLE. FAILURE TO OBSERVE THESE PRECAUTIONS CAN RESULT IN IMPROPER SRS OPERATION AND POSSIBLE LACK OF SUPPLEMENTAL RESTRAINT PROTECTION FOR THE DRIVER AND PASSENGER DURING AN ACCIDENT IMPACT.

All sensors are specifically calibrated and are keyed to the sensor location and SRS wiring harness. Caution should be used to ensure proper location of the sensors. The keying of the sensor to their locations and wiring harness connectors should never be modified in the filed.

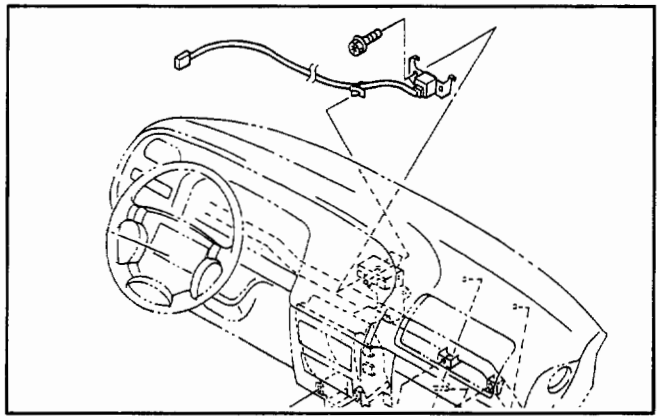

REMOVAL

1. Disable the SRS. (Refer to "Disabling the SRS " in this section.).
2. Remove steering cowl
3. Remove instrument panel cluster.
4. Remove meter assembly.
5. Remove the transmission knob(for M/T) and transfer control knob.
6. Remove front console assembly and disconnect the wiring harness connector.
7. Remove the knee bolster pad and engine hood opening lever.
8. Remove the knee bolster reinforcement.
9. Remove glove box assembly.
10. Remove instrument lower cover.
11. Remove passenger side reinforcement
12. Remove dash side trim cover LH
13. Remove dash side trim cover RH.
14. Remove front grill defroster.
15. Remove Instrument panel assembly.
16. Disconnect dual pole arming sensor connector.
17. Remove cross beam bracket.
18. Remove dual pole arming sensor.

INSTALLATION

1. Install dual pole arming sensor and tighten to specified torque.
   Torque: 26N·m(19 lb·ft.).
2. Install cross beam bracket.
3. Connect dual pole arming sensor connector.
4. Install instrument panel assembly.
5. Install front grill defroster.
6. Install dash side trim cover RH.
7. Install dash side trim cover LH.
8. Install passenger side reinforcement
9. Install instrument lower cover.
10. Install glove box assembly.
11. Install the knee bolster reinforcement.
12. Install the knee bolster pad and engine hood opening lever.
13. Install front console assembly and connect the wiring harness connector.
14. Install the transmission knob(for M/T) and transfer control knob.
15. Install meter assembly.
16. Install instrument panel cluster.
17. Install steering cowl
18. Enable the SRS (Refer to "Enabling the SRS" in this section.).

DRIVER INFLATOR MODULE

WARNING: SAFETY PRECAUTIONS MUST BE FOLLOWED WHEN HANDLING A DEPLOYED INFLATOR MODULE(AIR BAG). AFTER DEPLOYMENT, THE INFLATOR MODULE(AIR BAG) SURFACE MAY CONTAIN A SMALL AMOUNT OF SODIUM HYDROXIDE, A BY–PRODUCT OF THE DEPLOYMENT REACTION, THAT IS IRRITATING TO THE SKIN AND EYES. MOST OF THE POWDER ON THE INFLATOR MODULE (AIR BAG)IS HARMLESS. AS A PRECAUTION, WEAR GLOVES AND SAFETY GLASSES WHEN HANDLING A DEPLOYED INFLATOR MODULE (AIR BAG), AND WASH YOUR HANDS WITH MILD SOAP AND WATER AFTERWARDS.

WARNING: WHEN CARRYING A LIVE INFLATOR MODULE (AIR BAG), MAKE SURE THE BAG AND TRIM COVER ARE POINTED AWAY FROM YOU. NEVER CARRY INFLATOR MODULE (AIR BAG)BY THE WIRES OR CONNECTOR ON THE UNDERSIDE OF MODULE. IN THE CASE OF AN ACCIDENTAL DEPLOYMENT, THE BAG WILL THEN DEPLOY WITH MINIMAL CHANCE OF INJURY. WHEN PLACING A LIVE INFLATOR MODULE (AIR BAG) ON A BENCH OR OTHER SURFACE, ALWAYS FACE BAG AND TRIM COVER UP, AWAY FROM THE SURFACE.NEVER REST A STEERING COLUMN ASSEMBLY ON THE STEERING WHEEL WITH THE INFLATOR MODULE (AIR BAG) FACE DOWN AND COLUMN VERTICAL. THIS IS NECESSARY SO THAT A FREE SPACE IS PROVIDED TO ALLOW THE INFLATOR MODULE (AIR BAG) TO EXPAND IN THE UNLIKELY EVENT OF ACCIDENTAL DEPLOYMENT. OTHERWISE, PERSONAL INJURY COULD RESULT.

NOTE: In the event deployment has occurred, inspect coil assembly wire for any signs of scorching, melting or any other damage due to excessive heat. If the coil has been damaged, replace it.

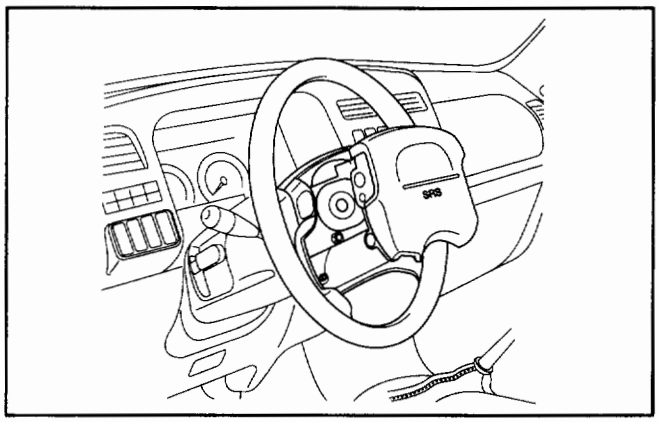

REMOVAL

1. Disable the SRS. (Refer to "Disabling the SRS " in this section.)
2. Remove inflator module (Air Bag) from steering wheel by removing four bolts. Lift inflator module (Air Bag) out of steering wheel.
3. Disconnect 2–way yellow connector and remove inflator module (Air Bag).

INSTALLATION

1. Connect inflator module to wiring harness connector.
2. Install inflator module into steering wheel and torque fasteners.
   Torque: 8N.m(69 lb.in.)
3. Enable the SRS (Refer to "Enabling the SRS" in this section.).

STEERING WHEEL

WARNING: SAFETY PRECAUTIONS MUST BE FOLLOWED WHEN HANDLING A DEPLOYED INFLATOR MODULE(AIR BAG). AFTER DEPLOYMENT, THE INFLATOR MODULE(AIR BAG) SURFACE MAY CONTAIN A SMALL AMOUNT OF SODIUM HYDROXIDE, A BY–PRODUCT OF THE DEPLOYMENT REACTION, THAT IS IRRITATING TO THE SKIN AND EYES. MOST OF THE POWDER ON THE INFLATOR MODULE (AIR BAG)IS HARMLESS. AS A PRECAUTION, WEAR GLOVES AND SAFETY GLASSES WHEN HANDLING A DEPLOYED INFLATOR MODULE (AIR BAG), AND WASH YOUR HANDS WITH MILD SOAP AND WATER AFTERWARDS.

WARNING: WHEN CARRYING A LIVE INFLATOR MODULE (AIR BAG), MAKE SURE THE BAG AND TRIM COVER ARE POINTED AWAY FROM YOU. NEVER CARRY INFLATOR MODULE (AIR BAG)BY THE WIRES OR CONNECTOR ON THE UNDERSIDE OF MODULE. IN THE CASE OF AN ACCIDENTAL DEPLOYMENT, THE BAG WILL THEN DEPLOY WITH MINIMAL CHANCE OF INJURY. WHEN PLACING A LIVE INFLATOR MODULE (AIR BAG) ON A BENCH OR OTHER SURFACE, ALWAYS FACE BAG AND TRIM COVER UP, AWAY FROM THE SURFACE.NEVER REST A STEERING COLUMN ASSEMBLY ON THE STEERING WHEEL WITH THE INFLATOR MODULE (AIR BAG) FACE DOWN AND COLUMN VERTICAL. THIS IS NECESSARY SO THAT A FREE SPACE IS PROVIDED TO ALLOW THE INFLATOR MODULE (AIR BAG) TO EXPAND IN THE UNLIKELY EVENT OF ACCIDENTAL DEPLOYMENT. OTHERWISE, PERSONAL INJURY COULD RESULT.

NOTE: In the event deployment has occurred, inspect coil assembly wire for any signs of scorching, melting or any other damage due to excessive heat. If the coil has been damaged, replace it.

REMOVAL

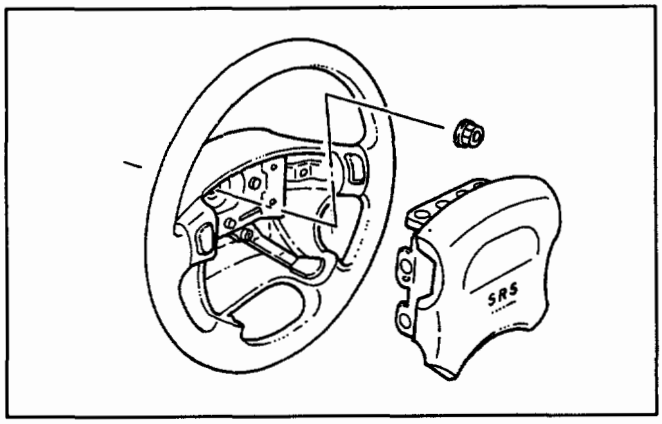

1. Disable the SRS. (Refer to "Disabling the SRS " in this section.)
2. Remove inflator module (Air Bag) from steering wheel by removing four bolts. Lift inflator module (Air Bag) out of steering wheel
3. Disconnect 2–way yellow connector and remove inflator module (Air Bag).
4. Disconnect horn lead connector
5. Remove steering wheel attachment nut.
6. Apply a setting mark across the steering wheel and shaft so parts can be reassembled in their original position.
7. Move the tires to the straight ahead position before removing the steering wheel.and install steering wheel puller onto steering wheel and remove steering wheel with J–29752.
8. Feed wiring through the wheel and remove wheel.

CAUTION: NEVER APPLY FORCE TO THE STEERING WHEEL IN DIRECTION OF THE SHAFT BY USING A HAMMER OR OTHER IMPACT TOOLS IN AN ATTEMPT TO REMOVE THE STEERING WHEEL. THE STEERING SHAFT IS DESIGNED AS AN ENERGY ABSORBING UNIT.

INSTALLATION

1. Install the steering wheel and align the setting marks.
2. Tighten the steering fixing nut to the specified torque.
   Torque : 34N·m(25 lb·ft.).
3. Connect horn lead connector.
4. Connect inflator module to 2–way yellow wiring harness connector.
5. Install inflator module into steering wheel and torque fasteners.
   Torque: 8N·m(69 lb·in.)
6. Enable the SRS (Refer to "Enabling the SRS" in this section.).

SRS COIL ASSEMBLY

WARNING: SAFETY PRECAUTIONS MUST BE FOLLOWED WHEN HANDLING A DEPLOYED INFLATOR MODULE(AIR BAG). AFTER DEPLOYMENT, THE INFLATOR MODULE(AIR BAG) SURFACE MAY CONTAIN A SMALL AMOUNT OF SODIUM HYDROXIDE, A BY–PRODUCT OF THE DEPLOYMENT REACTION, THAT IS IRRITATING TO THE SKIN AND EYES. MOST OF THE POWDER ON THE INFLATOR MODULE (AIR BAG)IS HARMLESS. AS A PRECAUTION, WEAR GLOVES AND SAFETY GLASSES WHEN HANDLING A DEPLOYED INFLATOR MODULE (AIR BAG), AND WASH YOUR HANDS WITH MILD SOAP AND WATER AFTERWARDS.

WARNING: WHEN CARRYING A LIVE INFLATOR MODULE (AIR BAG), MAKE SURE THE BAG AND TRIM COVER ARE POINTED AWAY FROM YOU. NEVER CARRY INFLATOR MODULE (AIR BAG)BY THE WIRES OR CONNECTOR ON THE UNDERSIDE OF MODULE. IN THE CASE OF AN ACCIDENTAL DEPLOYMENT, THE BAG WILL THEN DEPLOY WITH MINIMAL CHANCE OF INJURY. WHEN PLACING A LIVE INFLATOR MODULE (AIR BAG) ON A BENCH OR OTHER SURFACE, ALWAYS FACE BAG AND TRIM COVER UP, AWAY FROM THE SURFACE.NEVER REST A STEERING COLUMN ASSEMBLY ON THE STEERING WHEEL WITH THE INFLATOR MODULE (AIR BAG) FACE DOWN AND COLUMN VERTICAL. THIS IS NECESSARY SO THAT A FREE SPACE IS PROVIDED TO ALLOW THE INFLATOR MODULE (AIR BAG) TO EXPAND IN THE UNLIKELY EVENT OF ACCIDENTAL DEPLOYMENT. OTHERWISE, PERSONAL INJURY COULD RESULT.

NOTE: In the event deployment has occurred, inspect coil assembly wire for any signs of scorching, melting or any other damage due to excessive heat. If the coil has been damaged, replace it.

REMOVAL

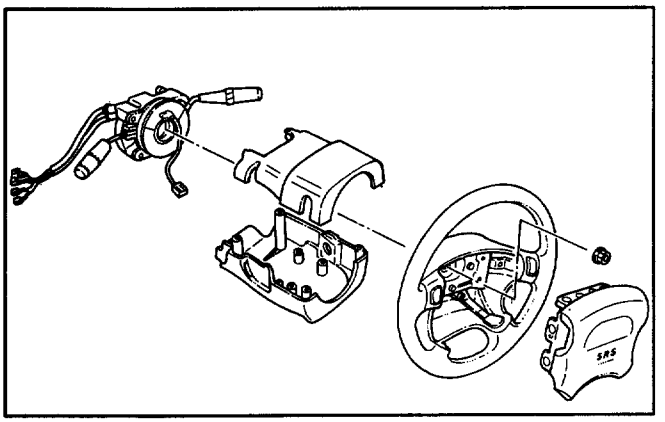

1. Disable the SRS. (Refer to "Disabling the SRS " in this section.)
2. Remove the transmission knob(for M/T) and transfer control knob.
3. Remove front console assembly and disconnect the wiring harness connector.
4. Remove the steering lower cover and engine hood opening lever.
5. Remove inflator module (Air Bag) from steering wheel by removing four bolts. Lift inflator module (Air Bag) out of steering wheel.
6. Disconnect connector and remove inflator module (Air Bag).
7. Disconnect horn lead
8. Remove steering wheel attachment nut.
9. Apply a setting mark across the steering wheel and shaft so parts can be reassembled in their original position.
10. Move the tires to the straight ahead position before removing the steering wheel and install steering wheel puller onto steering wheel and remove steering wheel with J–29752.
11. Feed wiring through the wheel and remove wheel.

CAUTION: NEVER APPLY FORCE TO THE STEERING WHEEL IN DIRECTION OF THE SHAFT BY USING A HAMMER OR OTHER IMPACT TOOLS IN AN ATTEMPT TO REMOVE THE STEERING WHEEL. THE STEERING SHAFT IS DESIGNED AS AN ENERGY ABSORBING UNIT.

12. Remove steering column cover.
13. Disconnect the wiring harness connectors located base of steering column.
14. Remove the combination switch assembly with SRS coil.

NOTE: SRS coil is a part of combination switch assembly, which cannot be replaced individually. Therefore, be sure not to remove the SRS coil from the combination switch assembly.

INSTALLATION

1. Install the combination switch assembly with SRS coil.
2. Connect the wiring harness connector located in base of steering column.
3. Turn the SRS coil clockwise to full, return about 3 turns and align the neutral mark.

CAUTION: WHEN TURNING THE SRS COIL CLOCKWISE TO FULL, STOP TURNING IF RESISTANCE IS FELT. FORCED FURTHER TURNING MAY CAUSE DAMAGE TO THE CABLE IN THE SRS COIL.

4. Install steering column cover.

CAUTION: WHEN INSTALLING THE STEERING COLUMN COVER, BE SURE TO WIRE (THROUGH EACH HARNESS) AS ILLUSTRATED SO THAT THE HARNESSES OF STARTER SWITCH,COMBINATION SWITCH AND SRS COIL MAY NOT CATCH WIRING.

5. Install the steering wheel and align the setting marks.
6. Tighten the steering fixing nut to the specified torque.
   Torque : 34N·m(25 lb·ft.).
7. Connect horn lead connector.
8. Connect inflator module to 2–way yellow wiring harness connector.
9. Install inflator module into steering wheel and torque fasteners.

NOTE: Always replace inflator module (Air Bag) fasteners with new fasteners.Never reuse old fasteners.
Torque: 8N·m(69 lb·in.)

10. Install the steering lower cover and engine hood opening lever.
11. Install front console assembly and connect the wiring harness connector.
12. Install the transmission knob(for M/T) and transfer control knob.
13. Enable the SRS (Refer to "Enabling the SRS" in this section.).

STEERING COLUMN

WARNING: SAFETY PRECAUTIONS MUST BE FOLLOWED WHEN HANDLING A DEPLOYED INFLATOR MODULE(AIR BAG). AFTER DEPLOYMENT, THE INFLATOR MODULE(AIR BAG) SURFACE MAY CONTAIN A SMALL AMOUNT OF SODIUM HYDROXIDE, A BY–PRODUCT OF THE DEPLOYMENT REACTION, THAT IS IRRITATING TO THE SKIN AND EYES. MOST OF THE POWDER ON THE INFLATOR MODULE (AIR BAG)IS HARMLESS. AS A PRECAUTION, WEAR GLOVES AND SAFETY GLASSES WHEN HANDLING A DEPLOYED INFLATOR MODULE (AIR BAG), AND WASH YOUR HANDS WITH MILD SOAP AND WATER AFTERWARDS.

WARNING: WHEN CARRYING A LIVE INFLATOR MODULE (AIR BAG), MAKE SURE THE BAG AND TRIM COVER ARE POINTED AWAY FROM YOU. NEVER CARRY INFLATOR MODULE (AIR BAG)BY THE WIRES OR CONNECTOR ON THE UNDERSIDE OF MODULE. IN THE CASE OF AN ACCIDENTAL DEPLOYMENT, THE BAG WILL THEN DEPLOY WITH MINIMAL CHANCE OF INJURY. WHEN PLACING A LIVE INFLATOR MODULE (AIR BAG) ON A BENCH OR OTHER SURFACE, ALWAYS FACE BAG AND TRIM COVER UP, AWAY FROM THE SURFACE.NEVER REST A STEERING COLUMN ASSEMBLY ON THE STEERING WHEEL WITH THE INFLATOR MODULE (AIR BAG) FACE DOWN AND COLUMN VERTICAL. THIS IS NECESSARY SO THAT A FREE SPACE IS PROVIDED TO ALLOW THE INFLATOR MODULE (AIR BAG) TO EXPAND IN THE UNLIKELY EVENT OF ACCIDENTAL DEPLOYMENT. OTHERWISE, PERSONAL INJURY COULD RESULT.

NOTE: In the event deployment has occurred, inspect coil assembly wire for any signs of scorching, melting or any other damage due to excessive heat. If the coil has been damaged, replace it.

REMOVAL

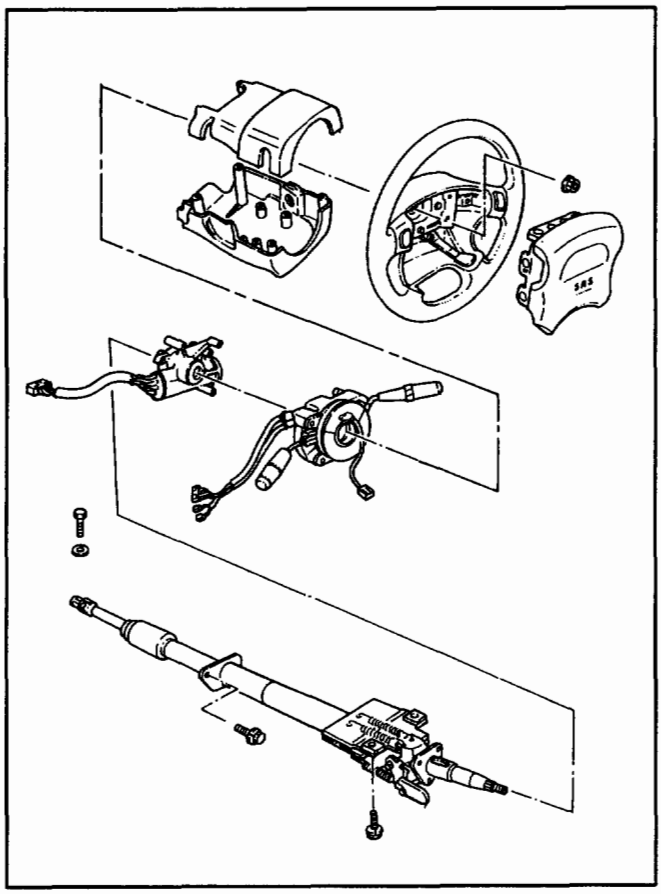

1. Disable the SRS. (Refer to "Disabling the SRS " in this section.)
2. Remove the transmission knob(for M/T) and transfer control knob.
3. Remove front console assembly and disconnect the wiring harness connector.
4. Remove the steering lower cover and engine hood opening lever.
5. Remove inflator module (Air Bag) from steering wheel by removing four bolts. Lift inflator module (Air Bag) out of steering wheel.
6. Disconnect 2–way yellow connector and remove inflator module (Air Bag).
7. Disconnect horn lead connector
8. Remove steering wheel attachment nut.
9. Apply a setting mark across the steering wheel and shaft so parts can be reassembled in their original position.
10. Move the tires to the straight ahead position before removing the steering wheel, and install steering wheel puller onto steering wheel and remove steering wheel with J–29752.
11. Feed wiring through the wheel and remove wheel.

CAUTION: NEVER APPLY FORCE TO THE STEERING WHEEL IN DIRECTION OF THE SHAFT BY USING A HAMMER OR OTHER IMPACT TOOLS IN AN ATTEMPT TO REMOVE THE STEERING WHEEL. THE STEERING SHAFT IS DESIGNED AS AN ENERGY ABSORBING UNIT.

12. Remove steering column cover.
13. Disconnect the wiring harness connectors located base of steering column.
14. Remove the combination switch assembly with SRS coil.

NOTE: SRS coil is a part of combination switch assembly, which cannot be replaced individually. Therefore, be sure not to remove the SRS coil from the combination switch assembly.

15. Remove snap ring.
16. Remove cushion rubber.
17. Disconnect shift lock cable(For A/T)
18. Disconnect the starter switch harness connector. Located base of steering column.
19. Remove steering lock cylinder assembly.
20. Apply a setting mark across the universal joint and steering shaft to reassemble the parts in their original position.
21. Remove steering column assembly.

NOTE: A setting mark can be easily made if the shaft is with draw a little by loosening the steering shaft universal joint.

INSTALLATION

1. Install steering column assembly and align the setting marks on the universal joint and steering shaft made during removal.
2. Tighten the steering column fixing bolts(dash panel side) to the specified torque.
   Torque: 19N·m(14 lb·ft.).
3. Tighten the steering column fixing bolts(Pedal bracket) to the specified torque.
   Torque: 17N·m(13 lb·ft.).
4. Tighten the universal joint to the specified torque.
   Torque: 25N·m(18 lb·ft.).
5. Install steering lock cylinder assembly.
6. Connect shift lock cable(For A/T)
7. Install cushion rubber.
8. Install snap ring.
9. Install the combination switch assembly with SRS coil.

10. Connect the wiring harness connector located base of steering column.

11. Turn the SRS coil clockwise to full, return about 3 turns and align the neutral mark.

CAUTION: WHEN TURNING THE SRS COIL CLOCKWISE TO FULL, STOP TURNING IF RESISTANCE IS FELT. FORCED FURTHER TURNING MAY CAUSE DAMAGE TO THE CABLE IN THE SRS COIL.

12. Install steering column cover.

CAUTION: WHEN INSTALLING THE STEERING COLUMN COVER, BE SURE TO WIRE (THROUGH EACH HARNESS) AS ILLUSTRATED SO THAT THE HARNESSES OF STARTER SWITCH,COMBINATION SWITCH AND SRS COIL MAY NOT CATCH WIRING.

13. Install the steering wheel and align the setting marks.

14. Tighten the steering fixing nut to the specified torque.
    Torque: 34N·m(25 lb·ft.).

15. Connect horn lead connecor.

16. Connect inflator module to 2–way yellow wiring harness connector.

17. Install inflator module into steering wheel and torque fasteners.
    Torque: 8N·m(69 lb·in.)

18. Install the steering lower cover and engine hood opening lever.

19. Install front console assembly and connect the wiring harness connector.

20. Install the transmission knob(for M/T) and transfer control knob.

21. Enable the SRS (Refer to "Enabling the SRS" in this section.).

PASSENGER INFLATOR MODULE

WARNING: SAFETY PRECAUTIONS MUST BE FOLLOWED WHEN HANDLING A DEPLOYED INFLATOR MODULE(AIR BAG). AFTER DEPLOYMENT, THE INFLATOR MODULE(AIR BAG) SURFACE MAY CONTAIN A SMALL AMOUNT OF SODIUM HYDROXIDE, A BY-PRODUCT OF THE DEPLOYMENT REACTION, THAT IS IRRITATING TO THE SKIN AND EYES. MOST OF THE POWDER ON THE INFLATOR MODULE (AIR BAG)IS HARMLESS. AS A PRECAUTION, WEAR GLOVES AND SAFETY GLASSES WHEN HANDLING A DEPLOYED INFLATOR MODULE (AIR BAG), AND WASH YOUR HANDS WITH MILD SOAP AND WATER AFTERWARDS.

WARNING: WHEN CARRYING A LIVE INFLATOR MODULE (AIR BAG), MAKE SURE THE BAG AND TRIM COVER ARE POINTED AWAY FROM YOU. NEVER CARRY INFLATOR MODULE (AIR BAG)BY THE WIRES OR CONNECTOR ON THE UNDERSIDE OF MODULE. IN THE CASE OF AN ACCIDENTAL DEPLOYMENT, THE BAG WILL THEN DEPLOY WITH MINIMAL CHANCE OF INJURY. WHEN PLACING A LIVE INFLATOR MODULE (AIR BAG) ON A BENCH OR OTHER SURFACE, ALWAYS FACE BAG AND TRIM COVER UP, AWAY FROM THE SURFACE.

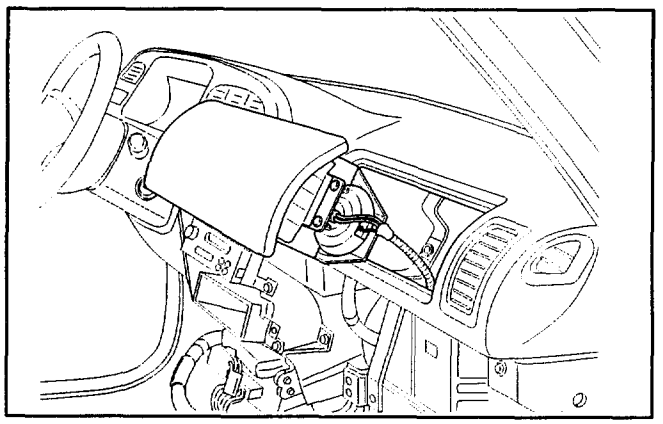

REMOVAL

1. Disable the SRS. (Refer to "Disabling the SRS " in this section.)
2. Remove the transmission knob(for M/T) and transfer control knob.
3. Remove front console assembly and disconnect the wiring harness connector.
4. Remove lower cluster.
5. Remove glove box assembly.
6. Remove instrument lower cover.
7. Remove passenger side knee bolster reinforcement
8. Disconnect SRS module harness connector.
9. Remove SRS module fixing nuts.
10. Remove passenger SRS module.

INSTALLATION

1. Install passenger SRS module.
2. Install SRS module fixing nuts and tighten the specified torque.
   Torque: 6N·m(52 lb·In.).
3. Connect SRS module harness connector.
4. Install passenger side knee bolster reinforcement
5. Install instrument lower cover.
6. Install glove box assembly.
7. Install lower cluster.
8. Install front console assembly and connect the wiring harness connector.
9. Install the transmission knob(for M/T) and transfer control knob.
10. Enable the SRS (Refer to "Enabling the SRS" in this section.).

SPECIFICATION

FASTENER TIGHTENING SPECIFICATION

Driver Inflator Module fixing bolt	8N·m(69 lb·in.)
Steering wheel fixing bolt	34N·m(25 lb·ft.)
Steering column(dash panel side fixing bolts)	19N·m(14 lb·ft.)
(Pedal bracket fixing bolt)	17N·m(13 lb·ft.)
(Universal joint fixing bolt)	25N·m(18 lb·ft.)
Discriminating forward sensor LH fixing bolts	29N·m(22 lb·ft.)
Discriminating forward sensor RH fixing bolts	29N·m(22 lb·ft.)
Dual pole arming sensor fixing bolts	25N·m(19 lb·ft.)
Passenger Inflator module fixing nuts	6N·m(52 lb·in.)

MEMO

SECTION 10

BODY

⚠ **CAUTION** : When fasteners are removed, always reinstall them at the same location from which they were removed. If a fastener needs to be replaced, use the correct part number fastener for that application. If the correct part number fastener is not available, a fastener of equal size and strength (or stronger) may be used. Fasteners must be used when installing fasteners that require it. If the above conditions are not followed, parts of system damage could result.

CONTENTS

General Description 10– 2
On-Vehicle Service 10– 3
Body Dimension 10– 3
Upper Body 10– 3
Front Section 10– 7
Room Section 10– 9
Rear Section 10– 14
Side Body 10– 16
Window Glass 10– 19
Front End 10– 23
Dash Side Trim Panel 10– 23
Assist Grip 10– 23
Consoles 10– 24
Instrument Panel Assembly 10– 25
Cross Beam Assembly 10– 30
Doors 10– 32
Front Door Assembly 10– 32
Rear Door Assembly 10– 32
Door Strikers 10– 33
Door Check Arm Assembly (Front & Rear) 10– 34
Front Door Trim Panel 10– 35
Rear Door Trim Panel 10– 38
Door Wood Panel Assembly 10– 40
Front Window Regulator, Glass and Glass Run 10– 41
Rear Window Regulator and Glass 10– 43
Front Door Lock Assembly 10– 45
Rear Door Lock Assembly 10– 46
Front Outside Handle and Door Lock Cylinder 10– 47
Rear Outside Handle 10– 48
Rear Door Fixed Glass and Glass Run 10– 49
Door Inside Lock Knob 10– 50
Door Inside Handle 10– 50
Rear Door Inside Lock Knob Link . . 10– 51
Front Door Sash Moulding 10– 51
Rear Door Moulding 10– 52
Front Door Waist Seal 10– 52
Rear Door Waist Seal 10– 53
Front Door Weatherstrip 10– 53
Rear Door Weatherstrip 10– 54
Front Door Seal Finisher 10– 54
Rear Door Seal Finisher 10– 54
Door Mirror 10– 55
Body Side 10– 56
Interior Trim Panels 10– 56
Center Pillar and Roof Side Trim Cover (L·W·B only) 10– 61
Roof Side Trim Cover (S·W·B only) . 10– 62
Front Pillar Trim Cover 10– 63
Center Pillar Assist Grip 10– 63
Assist Grip 10– 63
Fuel Filler Lid Opener Cable 10– 64
Fuel Filler Door 10– 65
Rocker Protector (Without Wheel Opening Extension) 10– 66
Wheel Opening Extension and Rocker Protector Assembly . . . 10– 67
Mud Flaps (With Wheel Opening Extension) 10– 69
Ventilation Assembly 10– 70
Quarter Flipper Glass Assembly (S·W·B) 10– 71
Rear End 10– 72
Tailgate Assembly (LH) 10– 72
Tailgate Assembly (RH) 10– 73
Tailgate Strikers 10– 75
Tailgate Trim Panel (LH) 10– 75
Tailgate Trim Panel (RH) 10– 76
Tailgate Lock Assembly (LH) 10– 77
Tailgate Lock Assembly (RH) 10– 78
Tailgate Inside Lock Knob 10– 79
Tailgate Outside Handle and/or Tailgate Lock Cylinder 10– 80
Tailgate Stopper Assembly 10– 81
Tailgate Dove-tail 10– 81
Tailgate Dove-tail Strikers 10– 82
Tailgate Frame Cover (LH) 10– 82
Tailgate Frame Cover (RH) 10– 83
Tailgate Sash Trim Cover 10– 83
Tailgate Outer Weatherstrip 10– 84

Tailgate Center Weatherstrip..... 10– 84
Tailgate Main Weatherstrip..... 10– 85
Spare Tire Carrier..... 10– 85
Seats..... 10– 86
Front Seat Assembly..... 10– 86
Rear Seat Assembly..... 10– 96
Rear Seat Foot Rest (L·W·B)..... 10–101
Luggage Floor Box (L·W·B)..... 10–101
Rope Hook Set..... 10–102
Seat Belt..... 10–103
Front Seat Belt..... 10–103
Front Seat Buckle Assembly..... 10–105
Rear Seat Belt..... 10–106
Reat Center Seat Belt (S·W·B)..... 10–108
Rear Center Seat Belt/Buckle Assembly..... 10–108
Rear Seat Lock Assembly..... 10–109
Rear Seat Striker..... 10–110
Roof..... 10–111
Headlining..... 10–111
Sun Roof Glass..... 10–113
Sun Roof Deflector..... 10–114
Sunshade..... 10–115
Sun Roof Frame Complete Assembly..... 10–116
Sun Roof Drain Hose..... 10–119
Rear Air Deflector..... 10–122
Roof Moulding..... 10–124
Stationary Glass..... 10–127
Windshield..... 10–127
Rear Quarter Side Glass..... 10–130
Tailgate Glass..... 10–132
Child Restraint..... 10–134
Child Seat Tether Anchor Bracket.. 10–134
Key..... 10–135
Key Coding..... 10–135
Key Styles..... 10–135
Main Data and Specifications..... 10–136
Torque Specifications..... 10–136
Special Tools..... 10–146

GENERAL DESCRIPTION

This section describes major items of the removal, installation and servicing procedures pertaining to TROOPER body. Each servicing instruction is applicable to all models of TROOPER, unless otherwise specifically mentioned. For those differing by specific models from the common procedures, they are detailed for each model.

ON-VEHICLE SERVICE
BODY DIMENSION

UPPER BODY

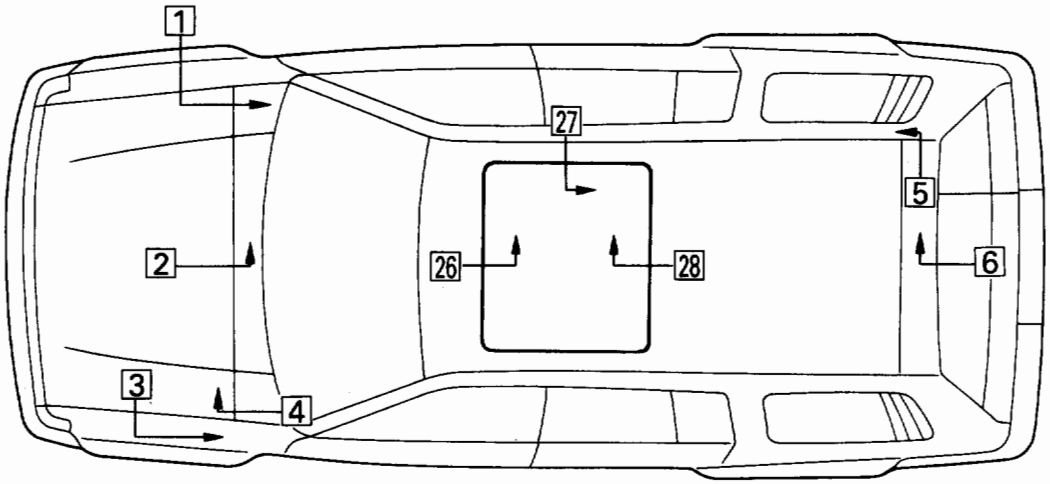

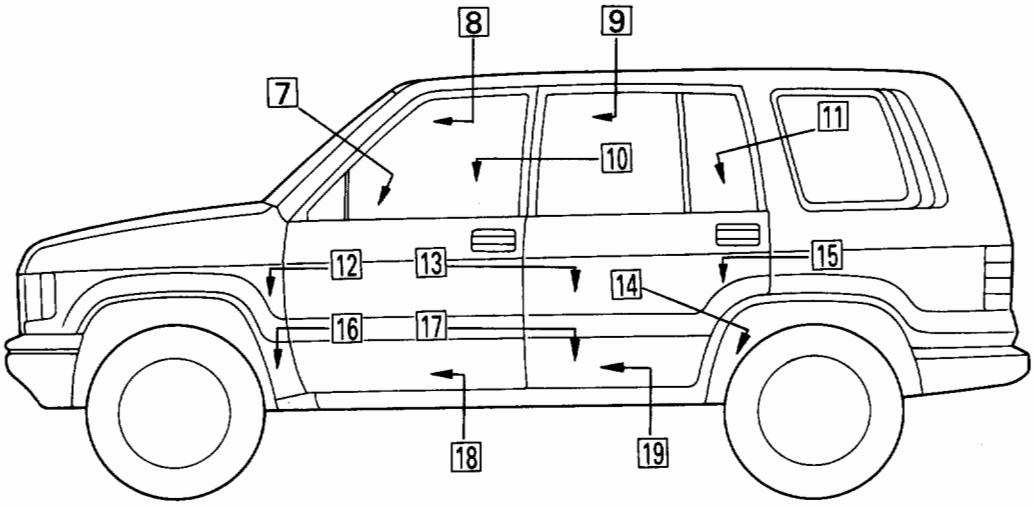

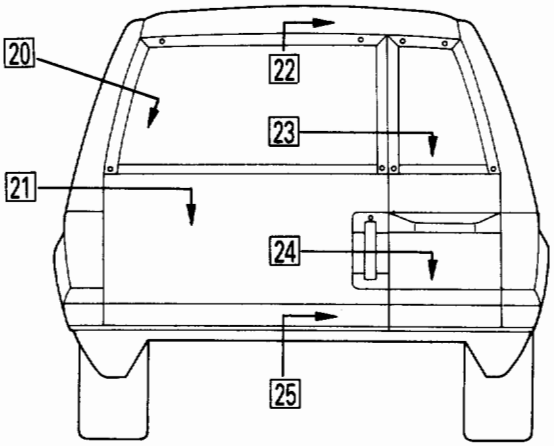

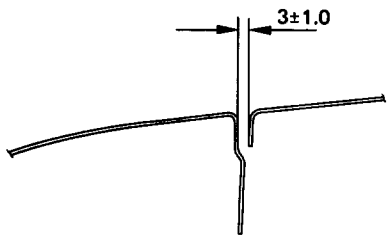

SECTION 1

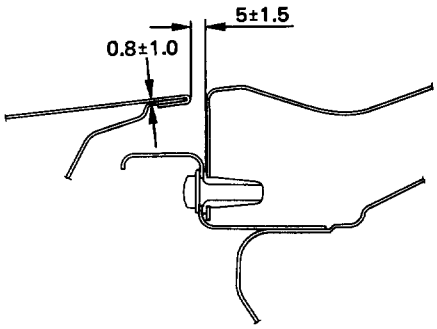

SECTION 2

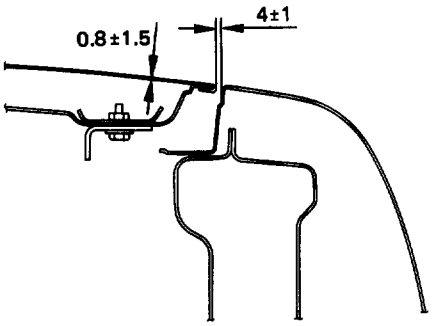

SECTION 3

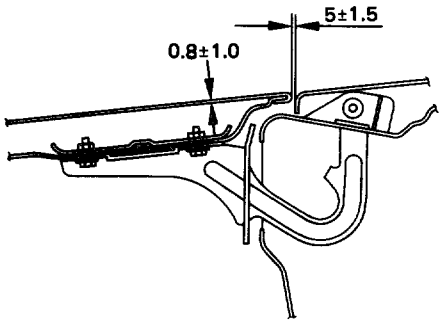

SECTION 4

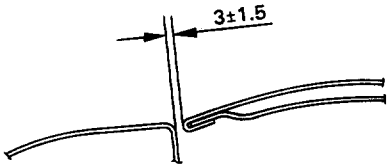

SECTION 5

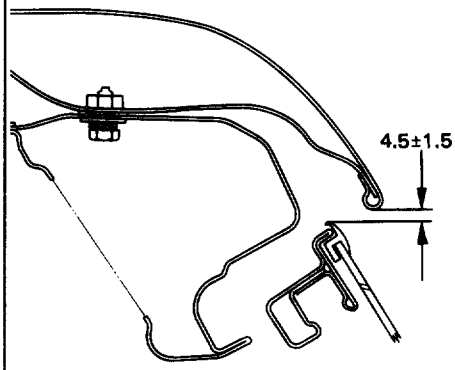

SECTION 6

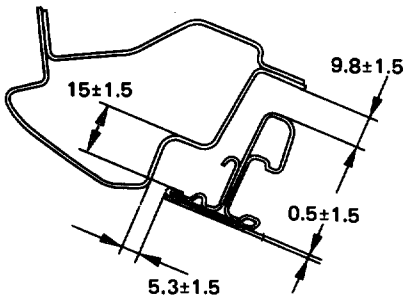

SECTION 7

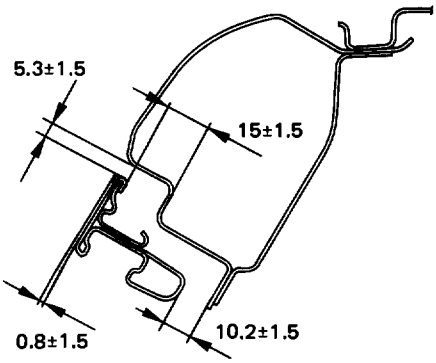

SECTION 8, 9

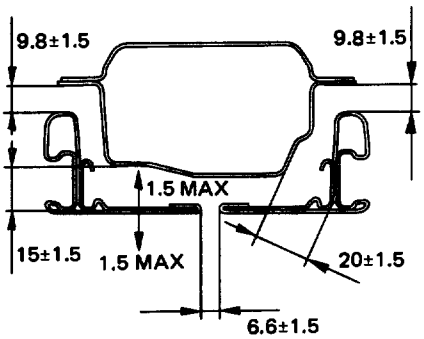

SECTION 10

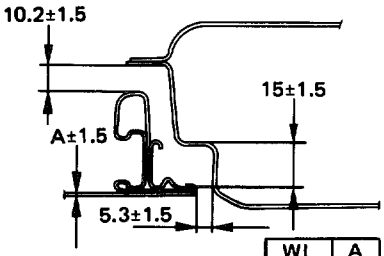

WL	A
1100	0.5
800	1.3

SECTION 11

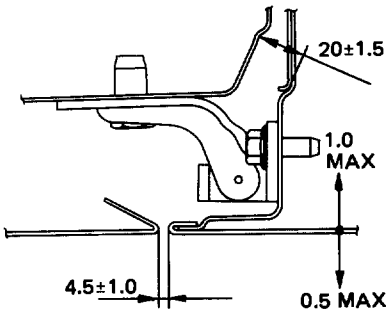

SECTION 12

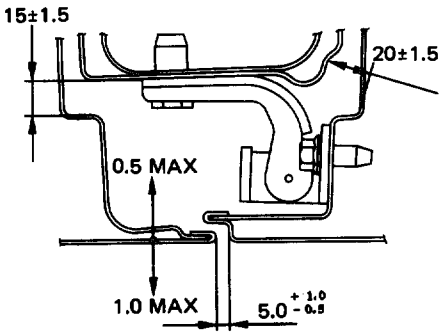

SECTION 13

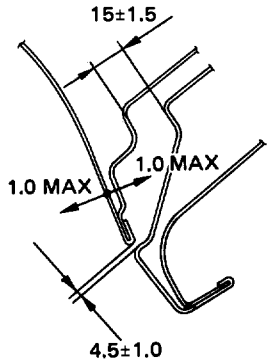

SECTION 14

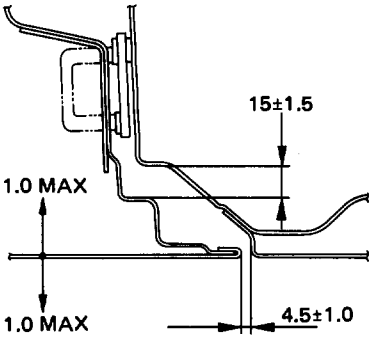

SECTION 15

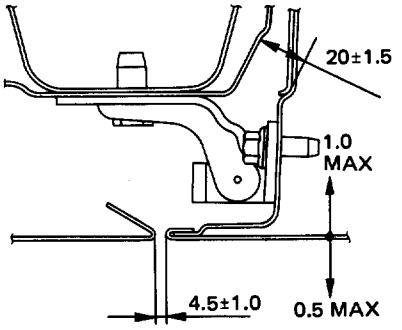

SECTION 16

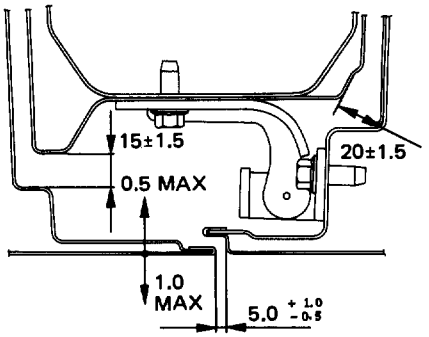

SECTION 17

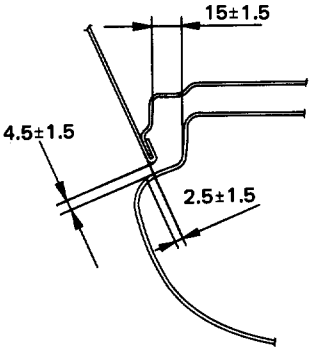

SECTION 18, 19

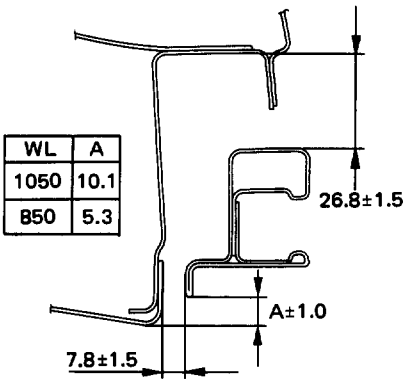

WL	A
1050	10.1
850	5.3

SECTION 20

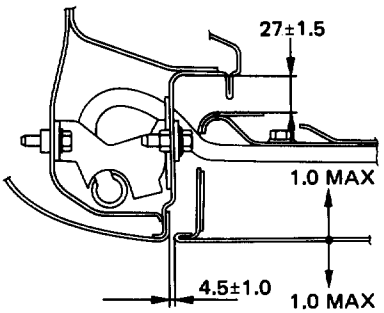

SECTION 21

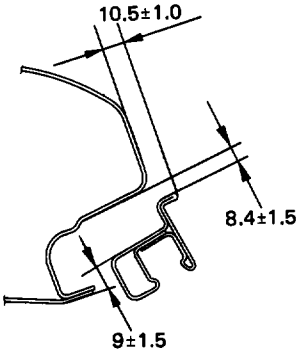

SECTION 22

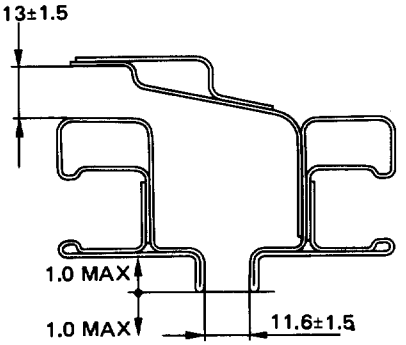

SECTION 23

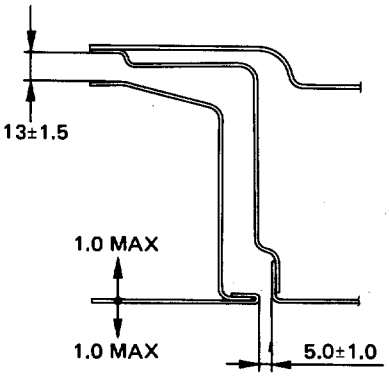

SECTION 24

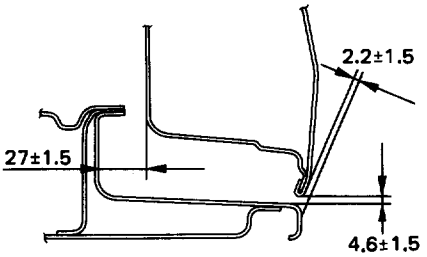

SECTION 25

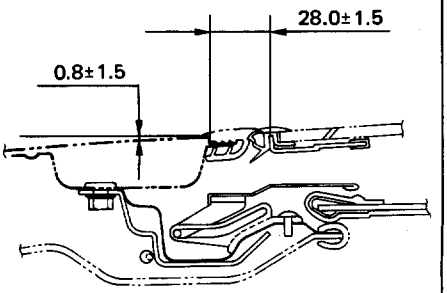

SECTION 26

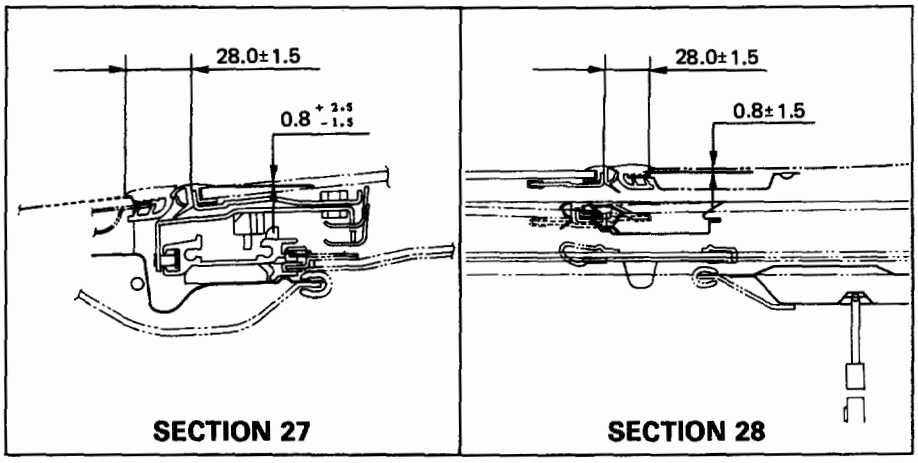
28.0±1.5
0.8 +2.5 -1.5
SECTION 27
28.0±1.5
0.8±1.5
SECTION 28

FRONT SECTION

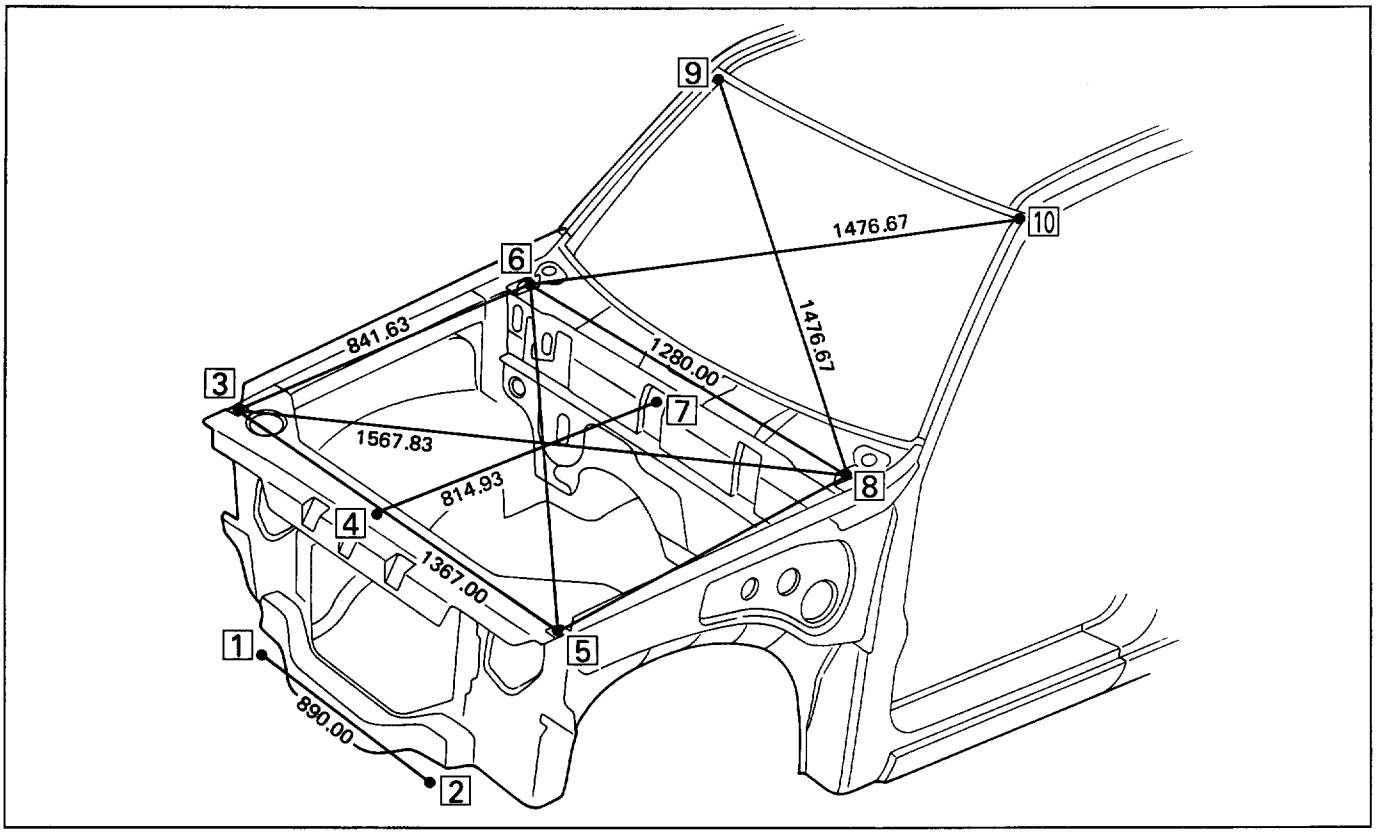

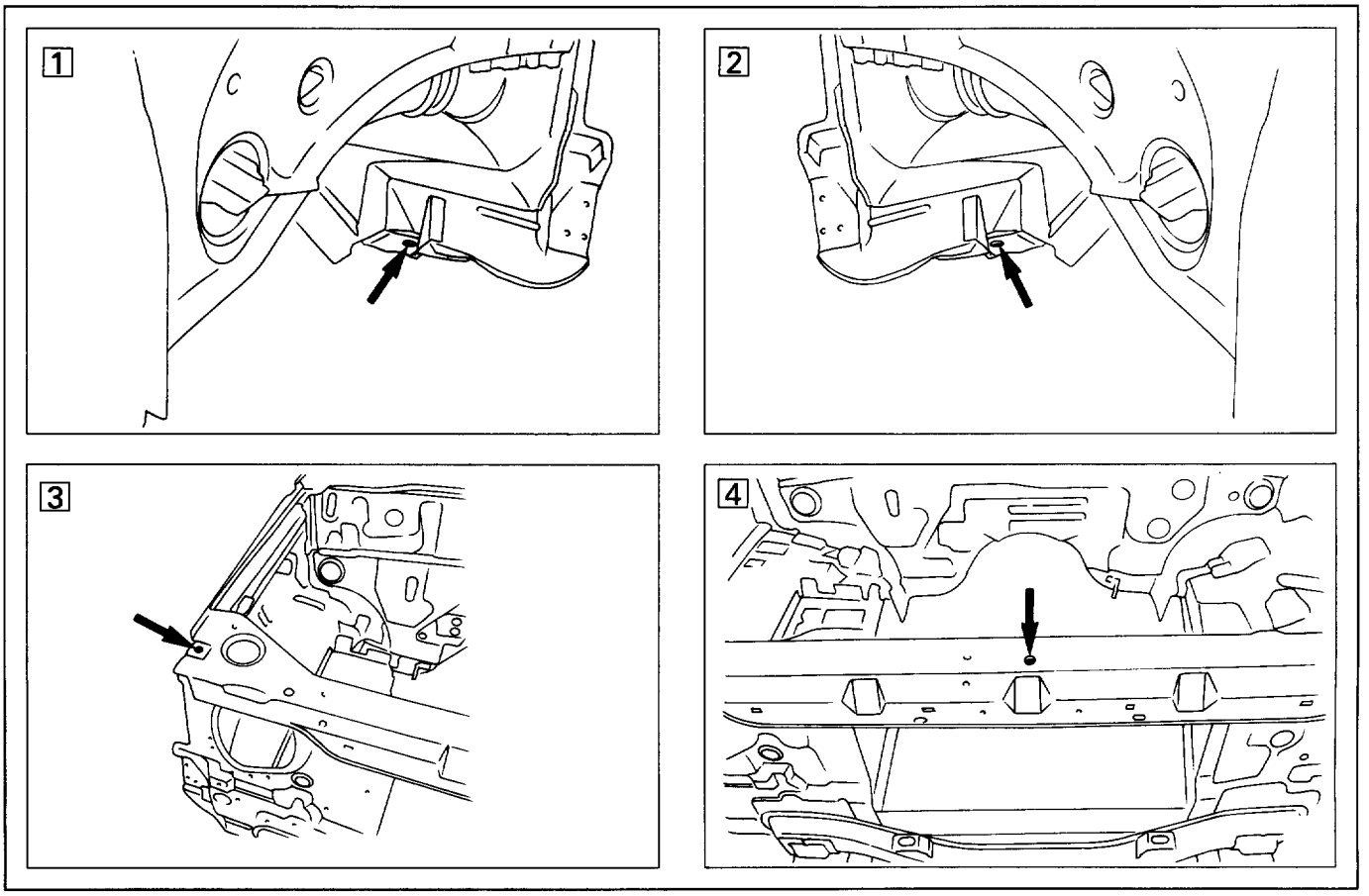

5

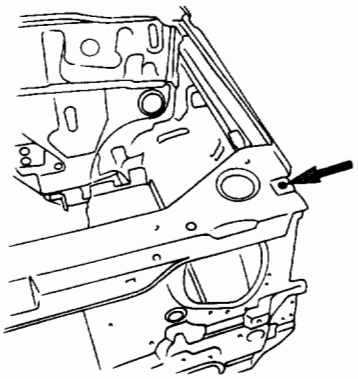

6

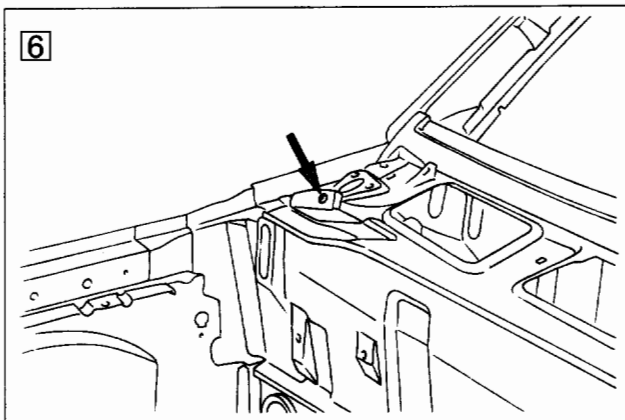

7

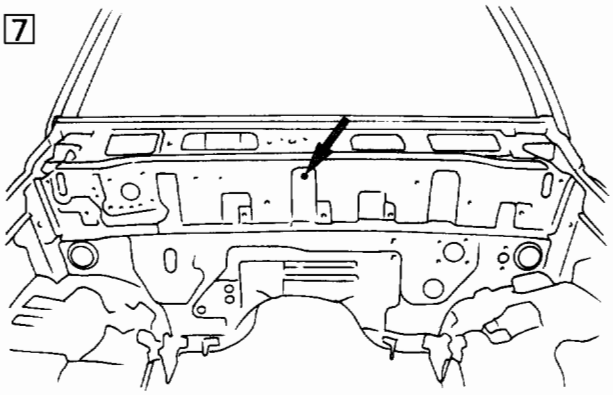

8

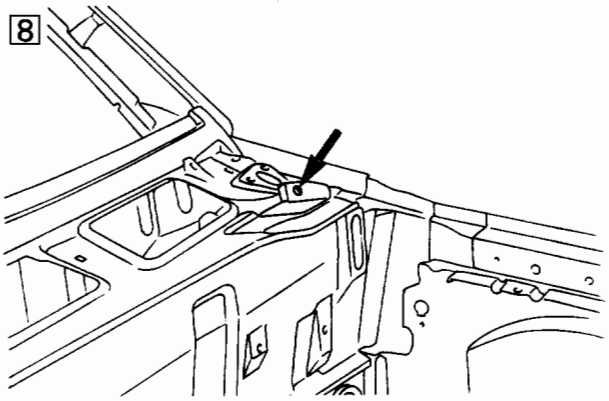

9

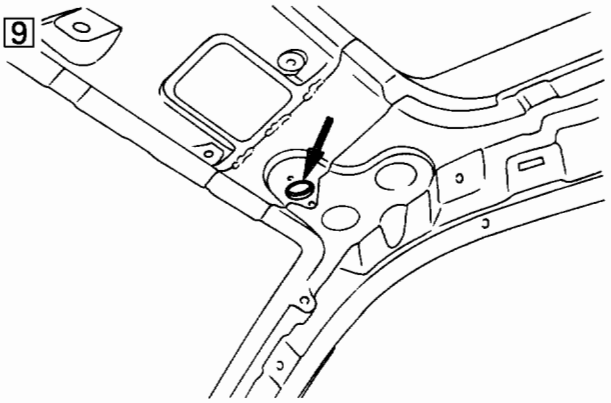

10

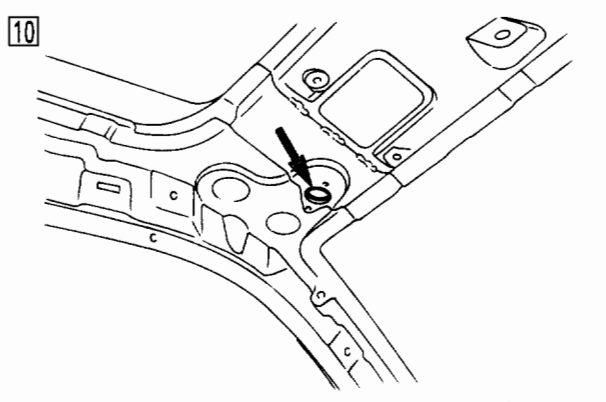

ROOM SECTION

Long Wheel Base

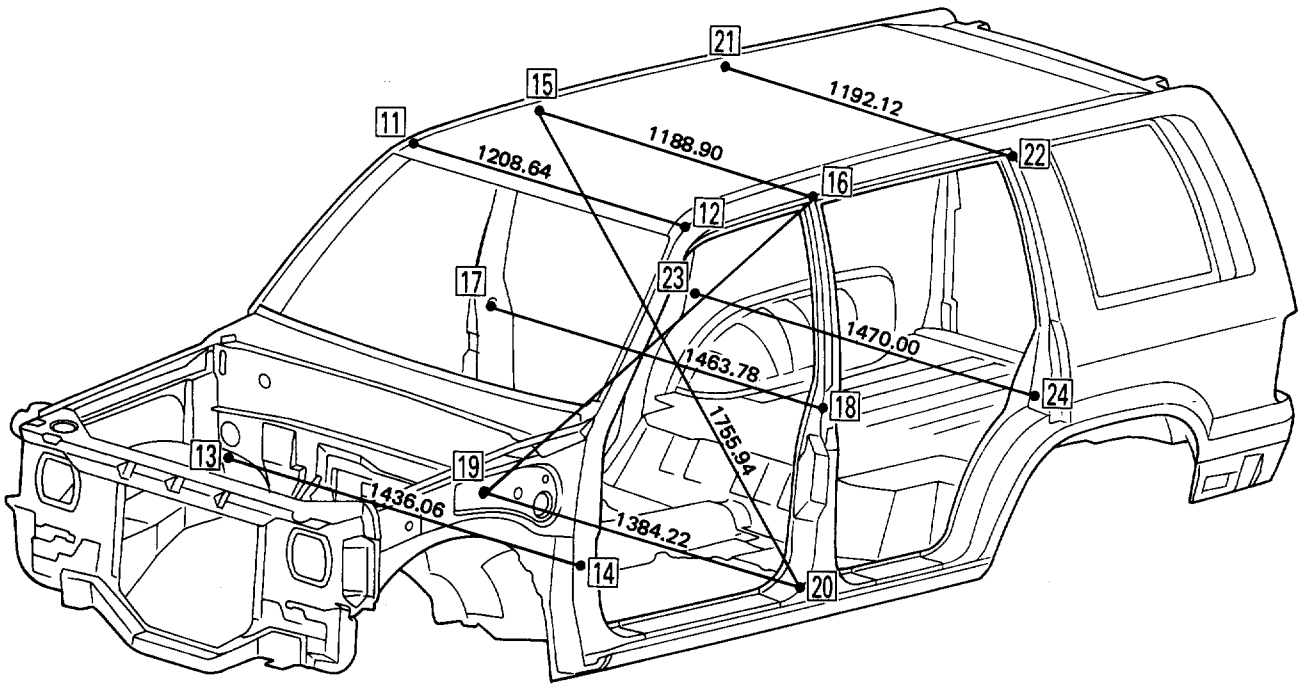

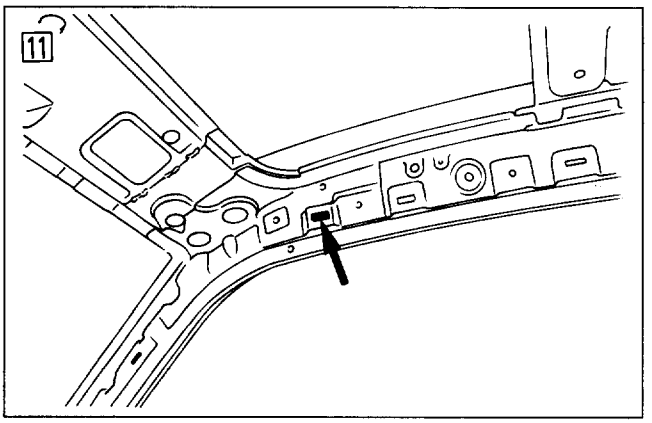

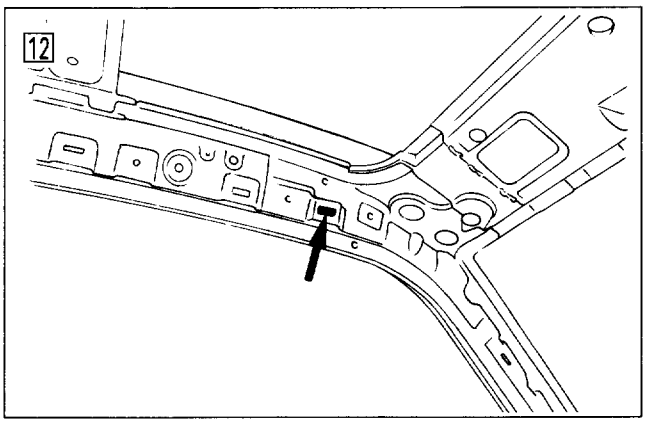

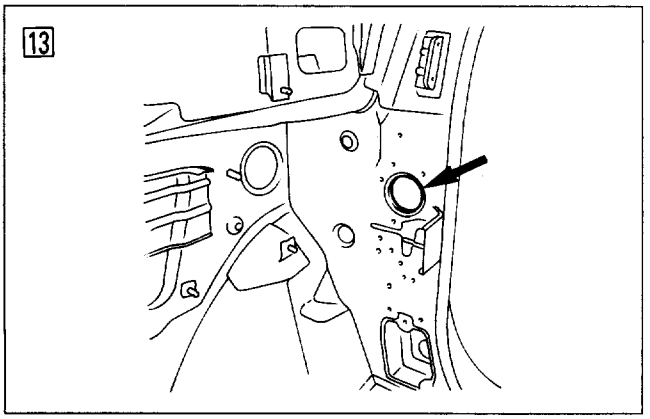

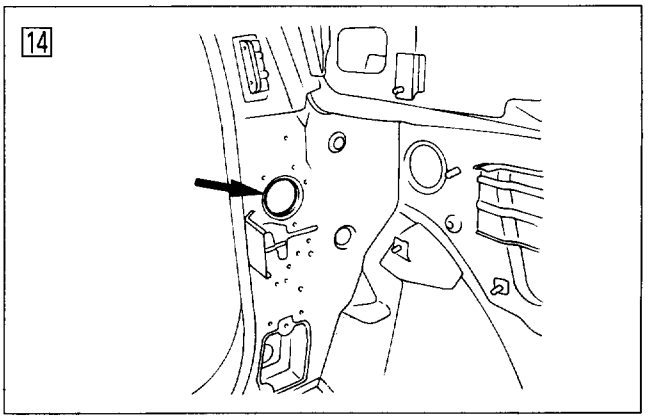

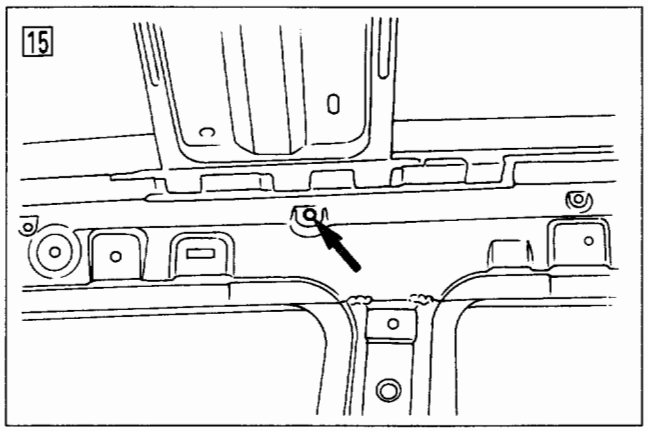
15

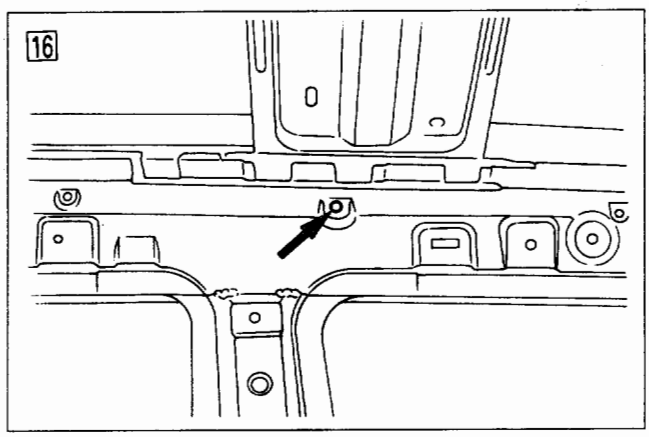
16

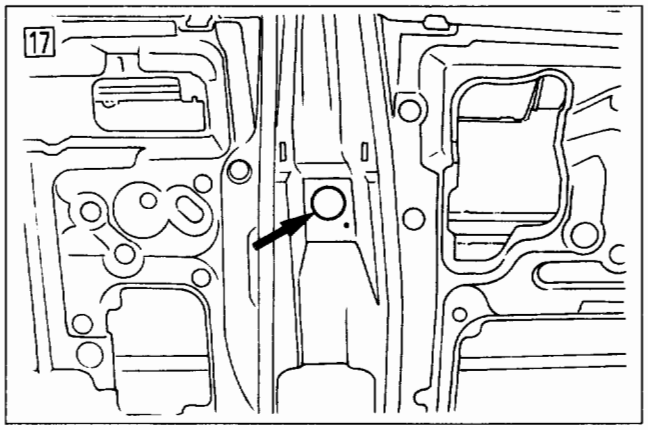
17

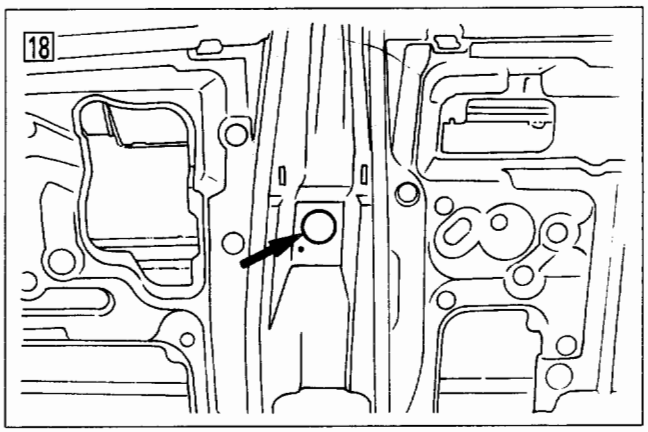
18

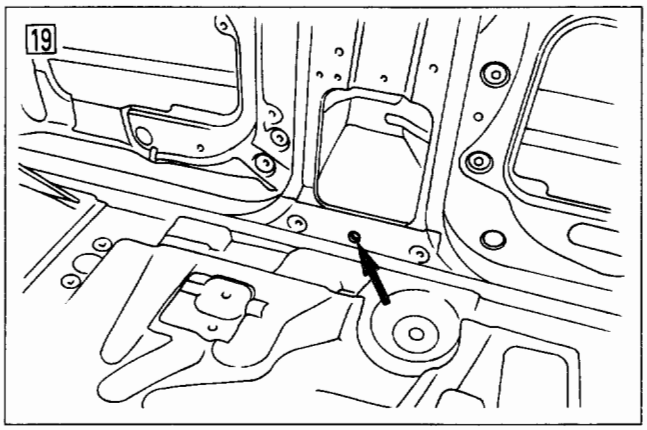
19

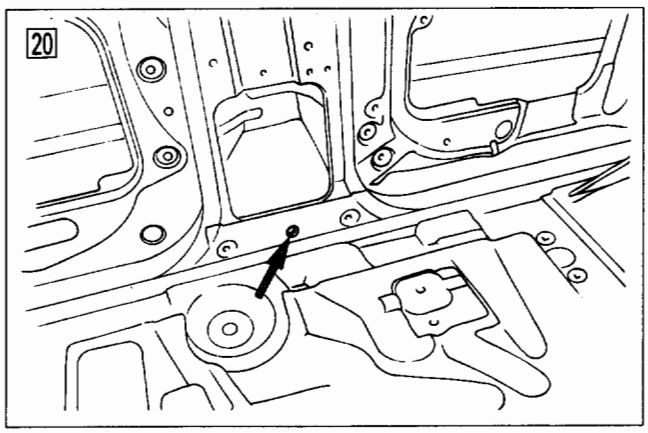
20

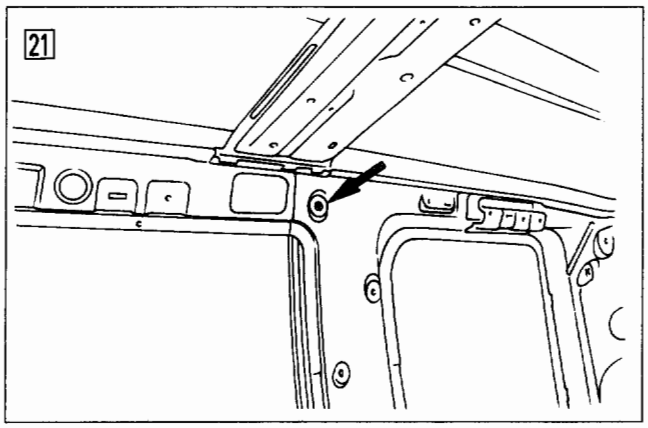
21

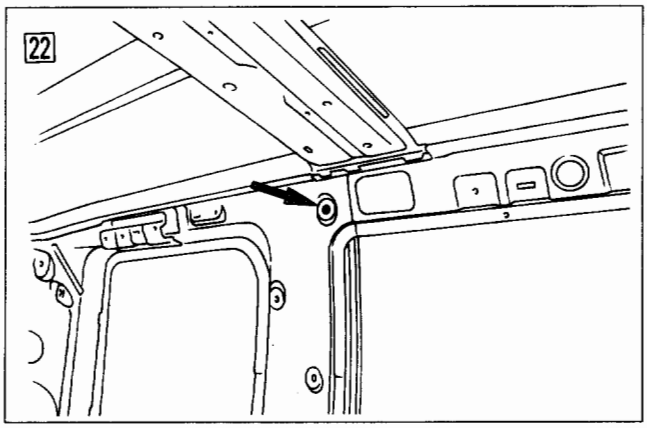
22

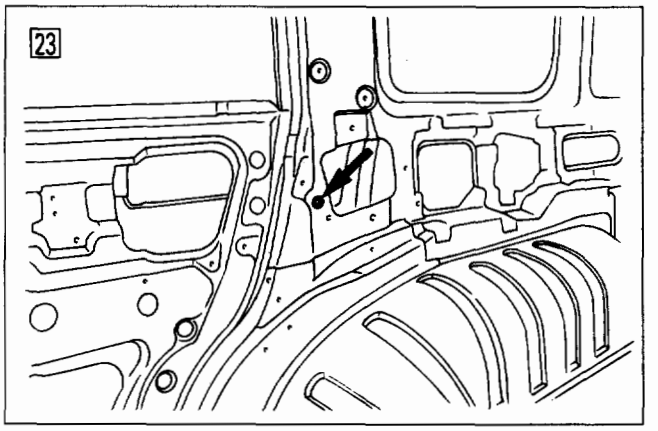
23

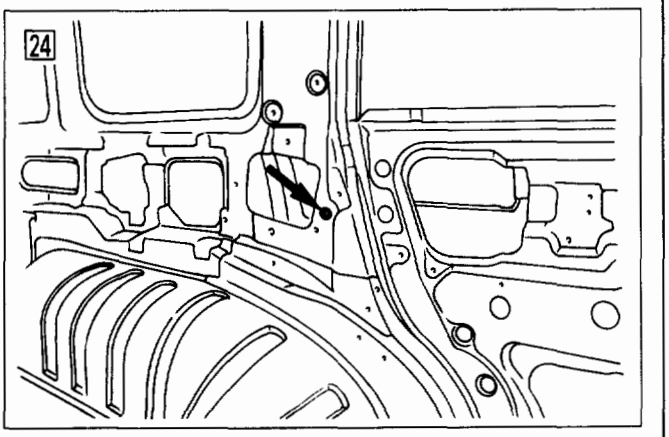
24

Short Wheel Base

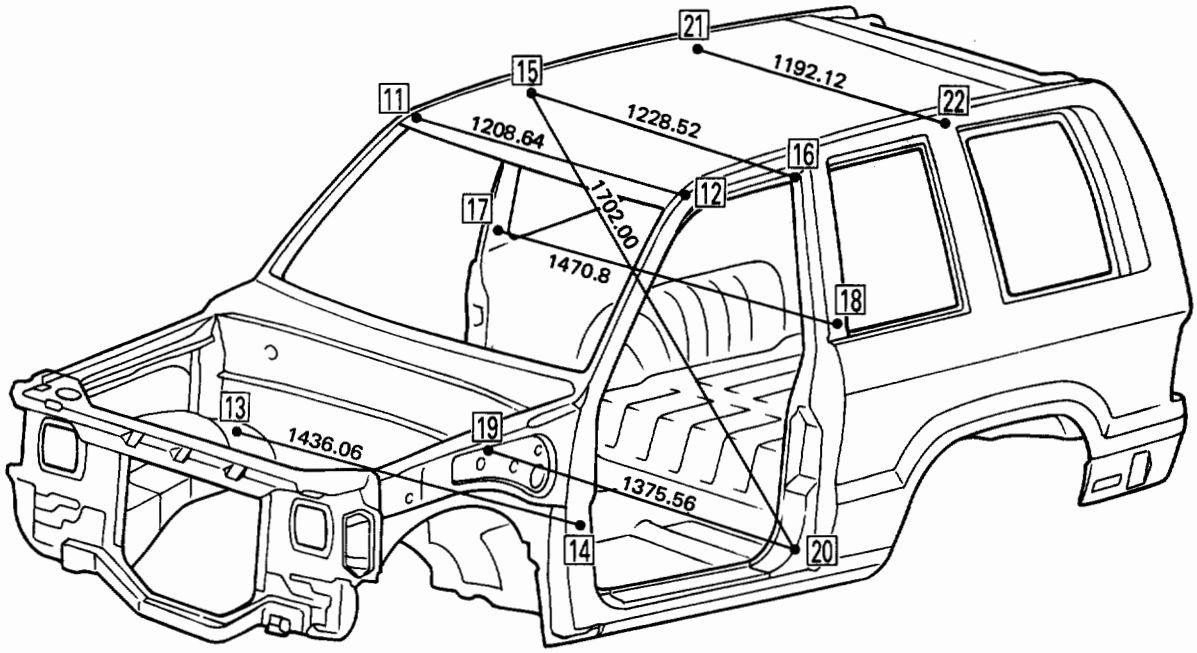

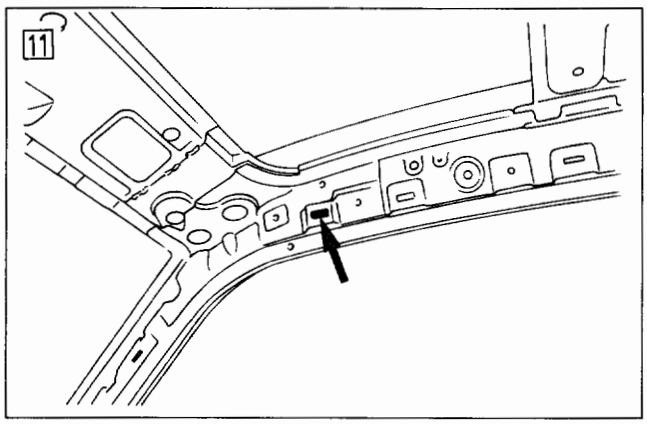

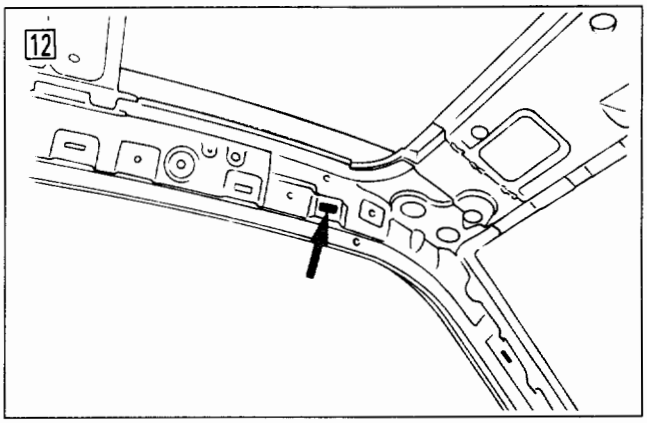

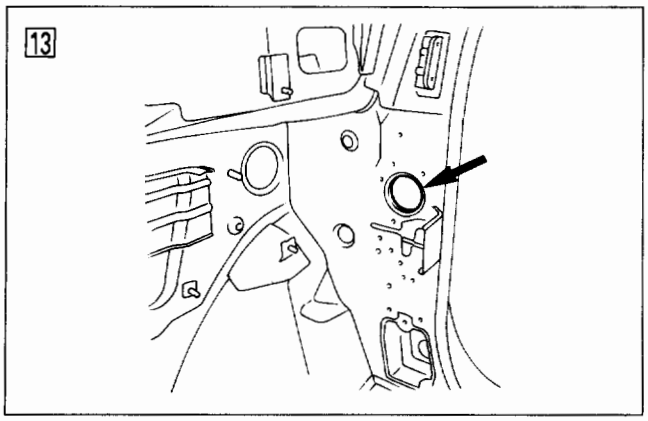

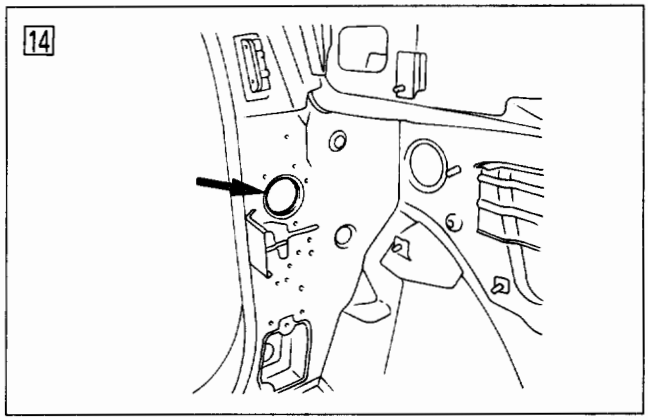

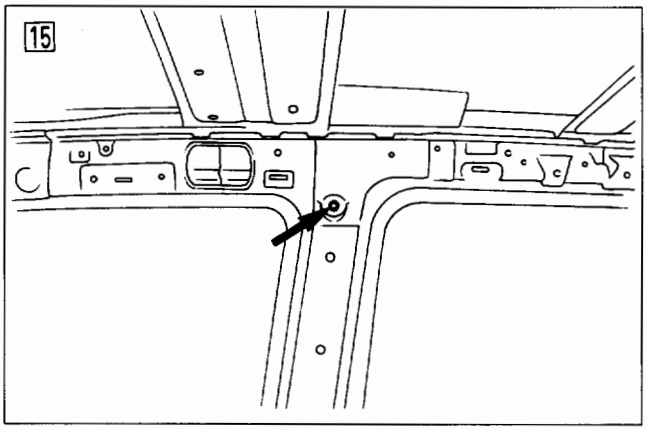
15

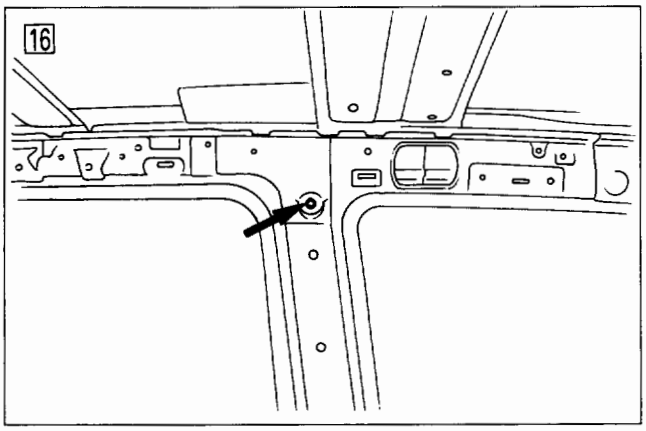
16

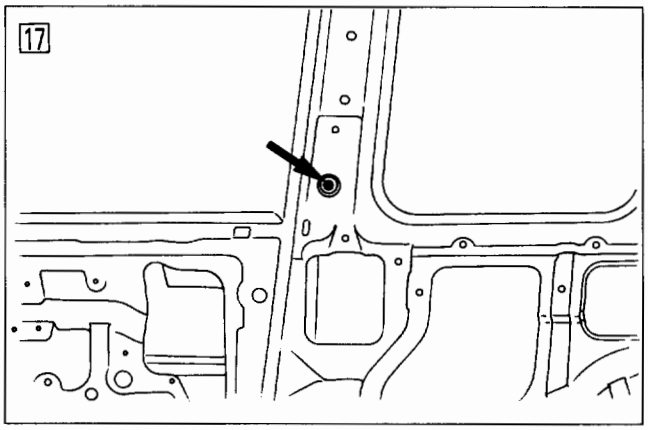
17

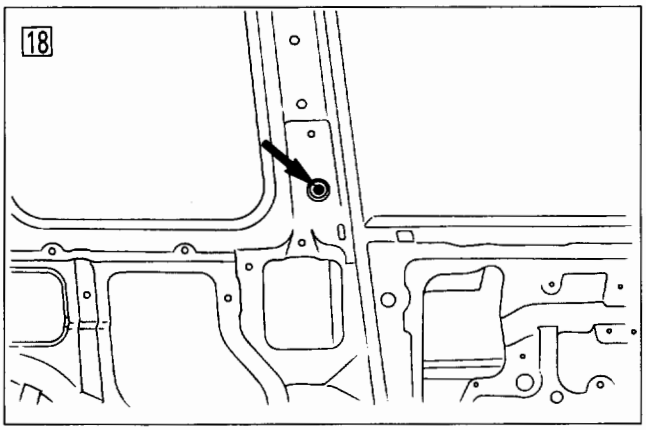
18

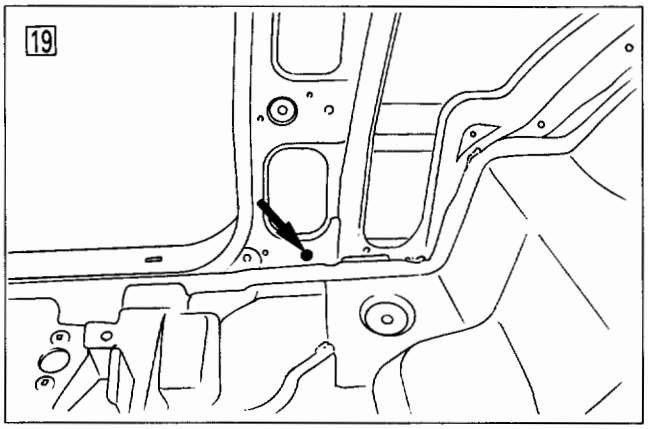
19

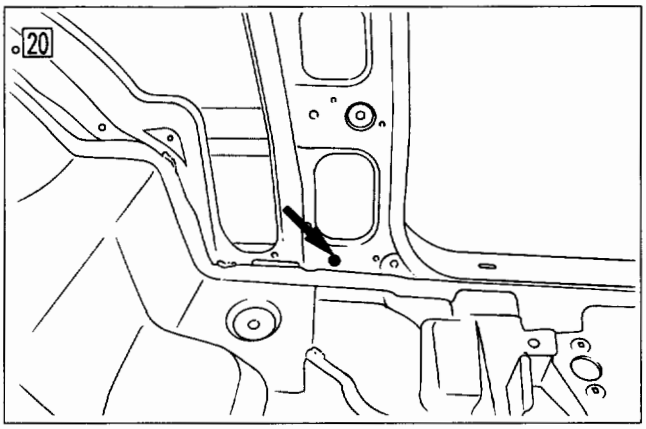
20

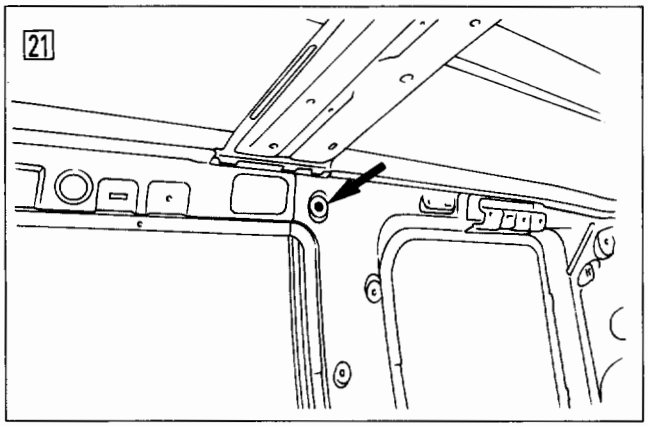
21

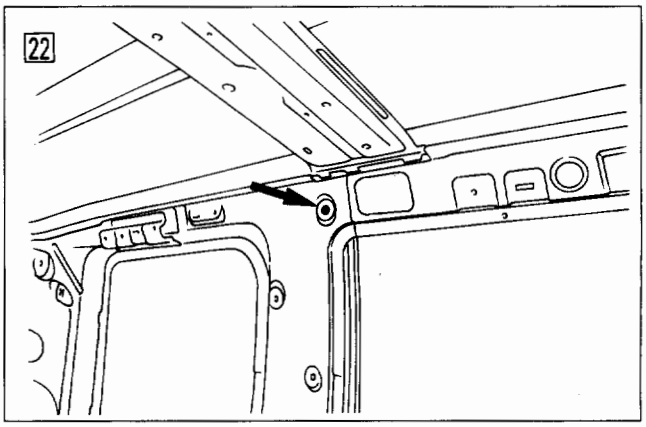
22

REAR SECTION

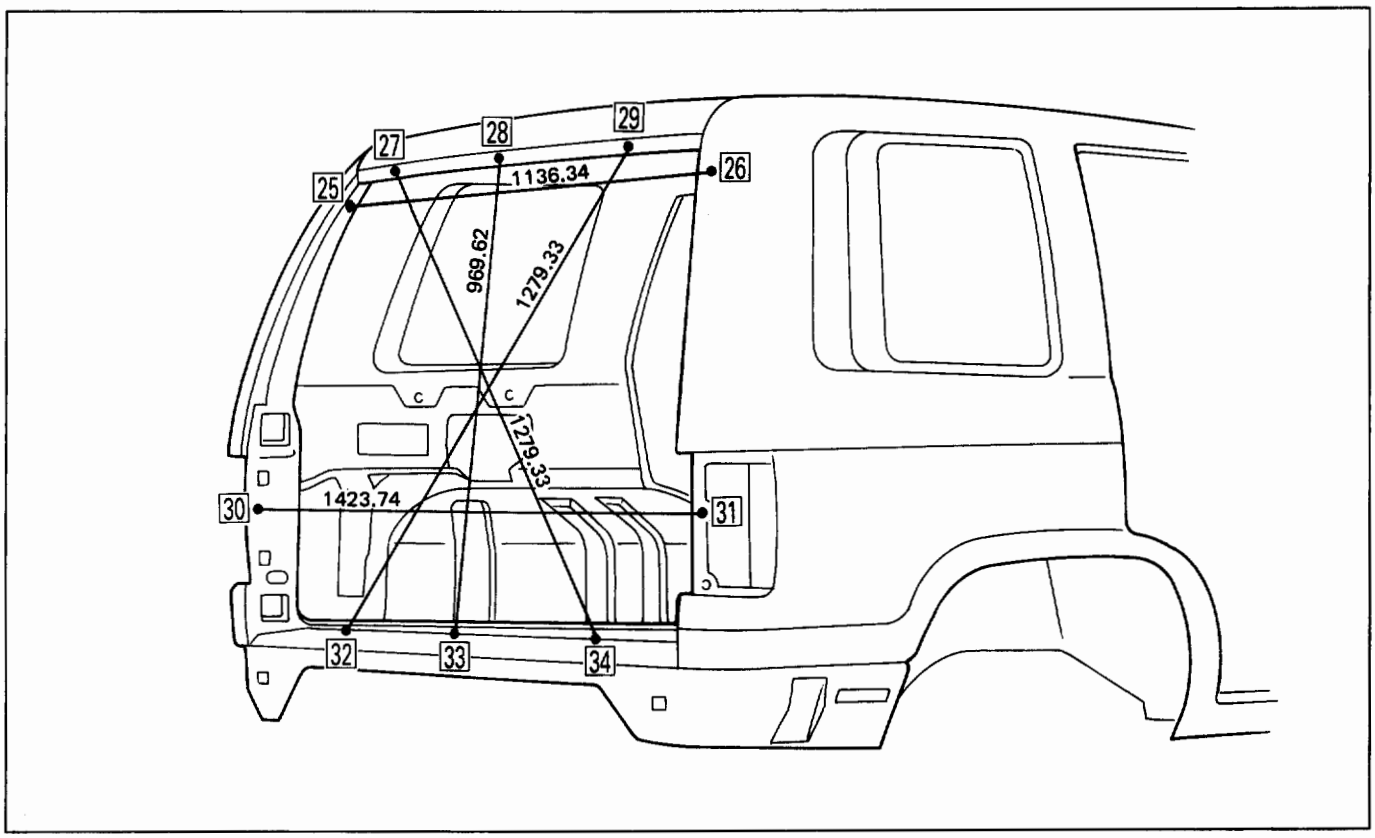

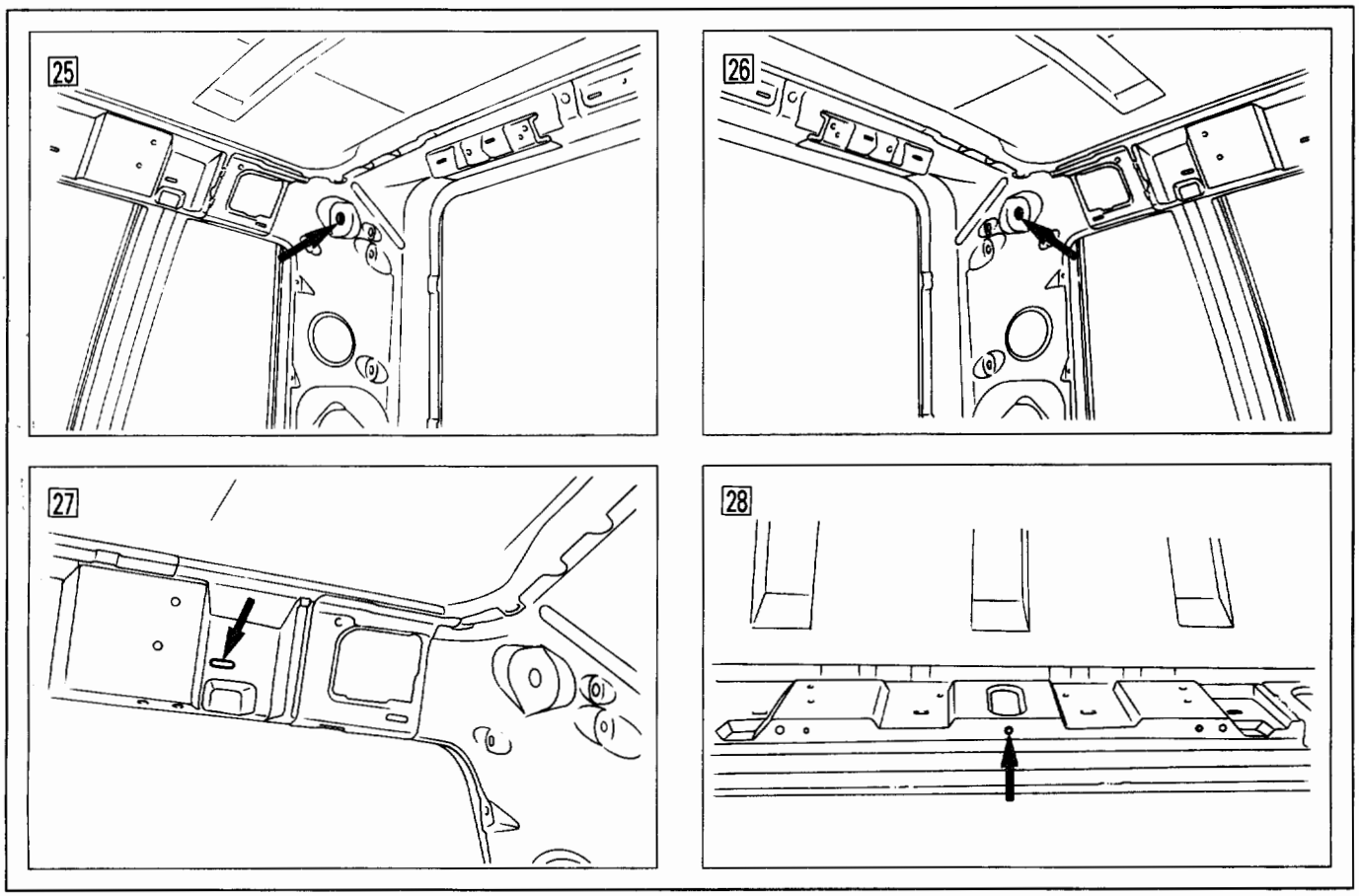

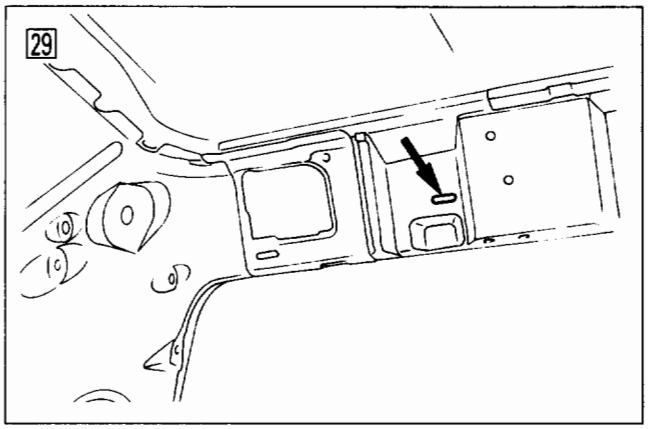
29

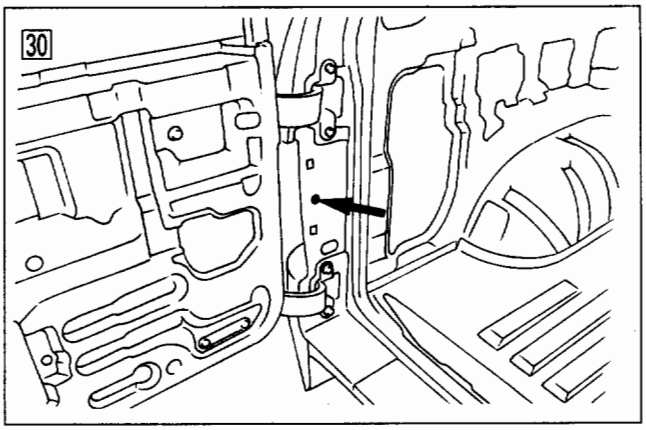
30

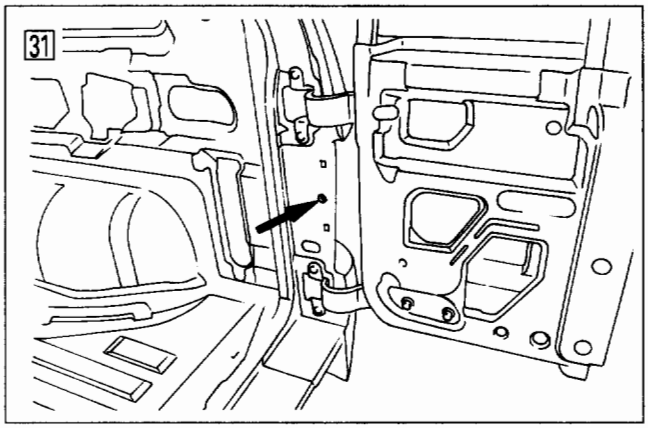
31

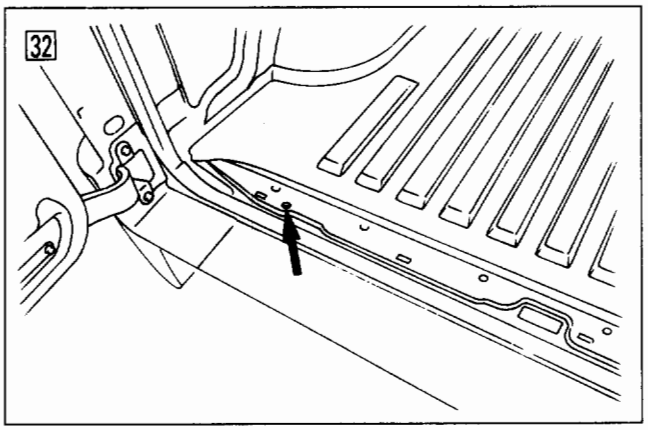
32

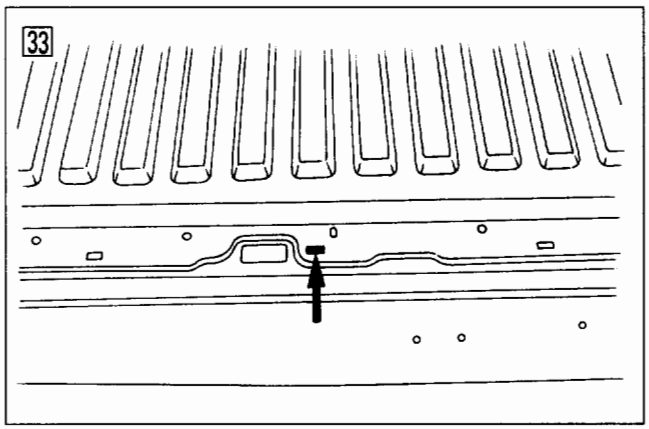
33

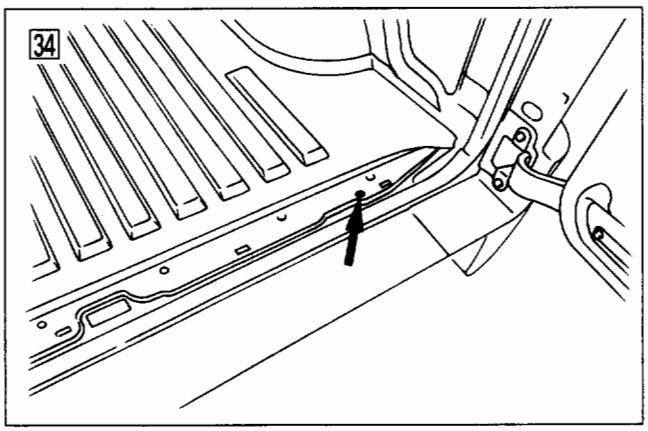
34

SIDE BODY

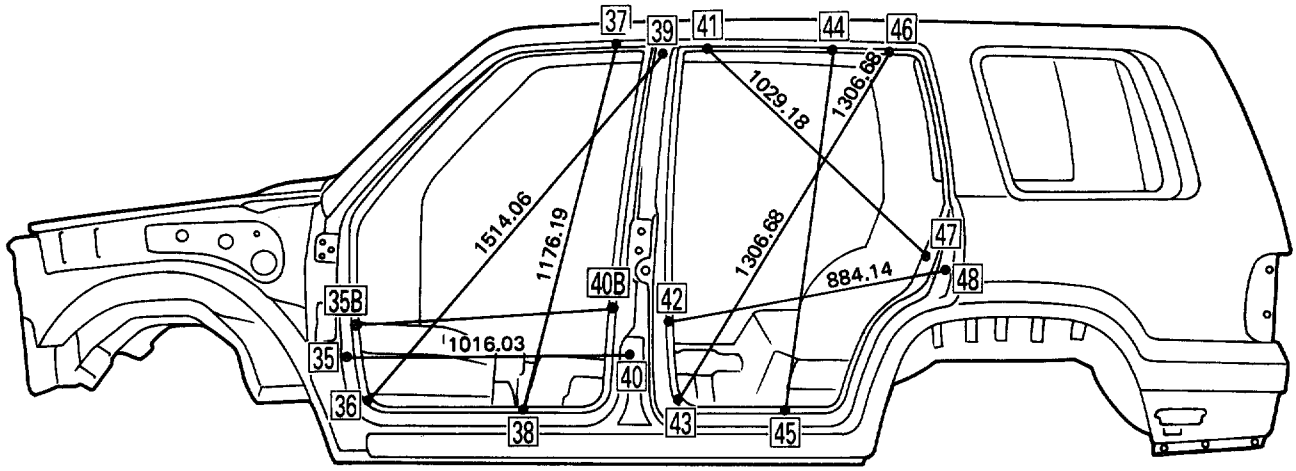

* 35B ~ 40B : Short Wheel Base Only

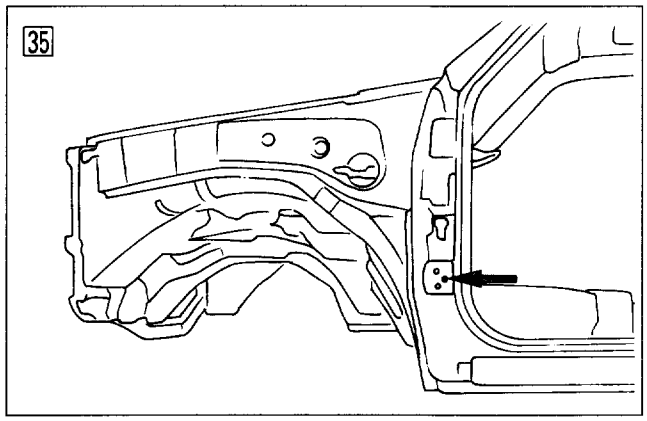

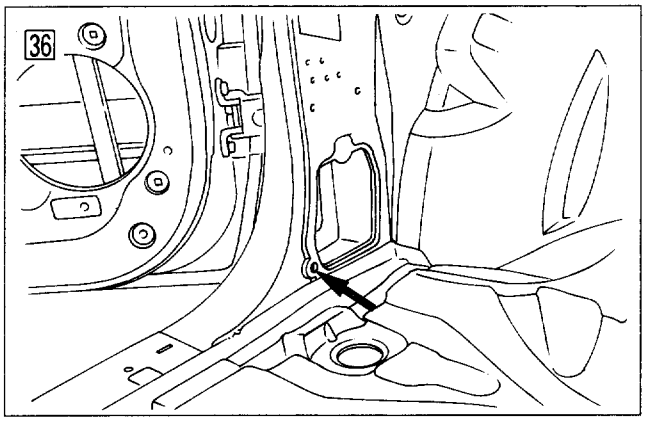

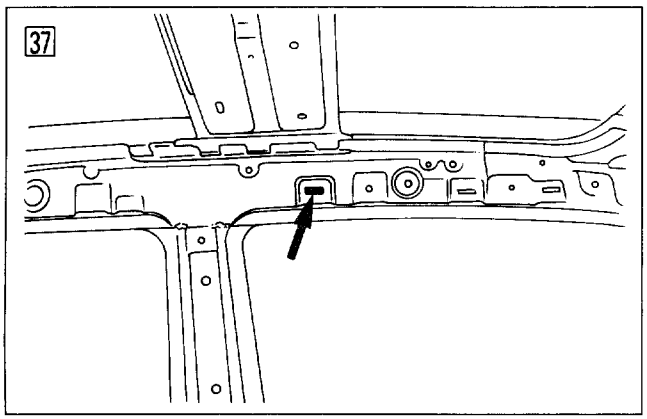

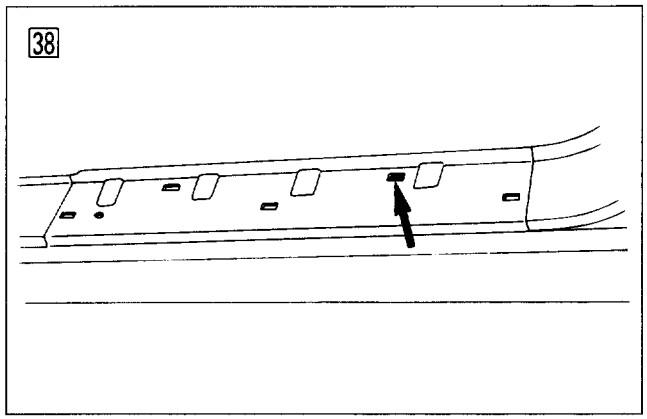

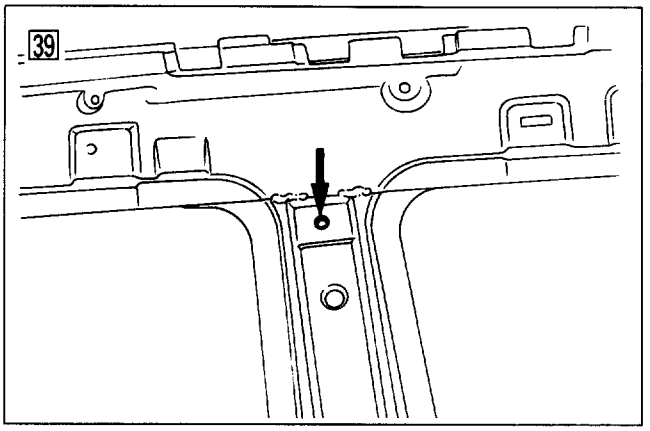
39

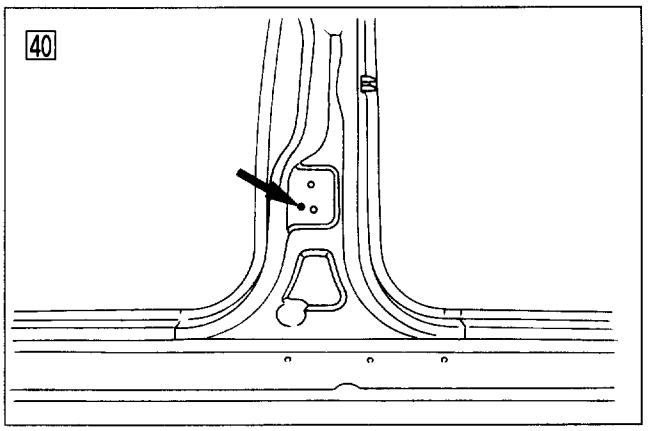
40

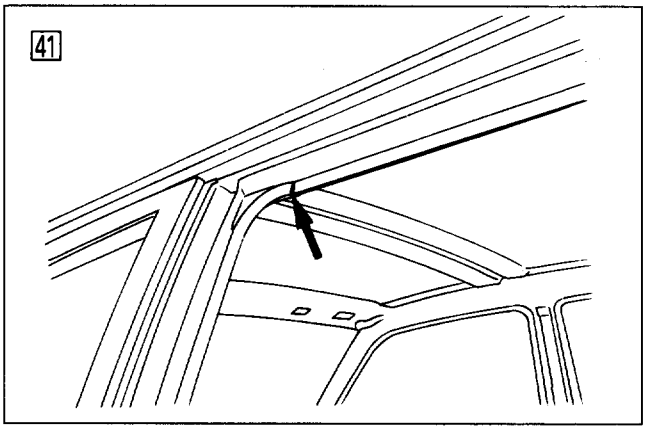
41

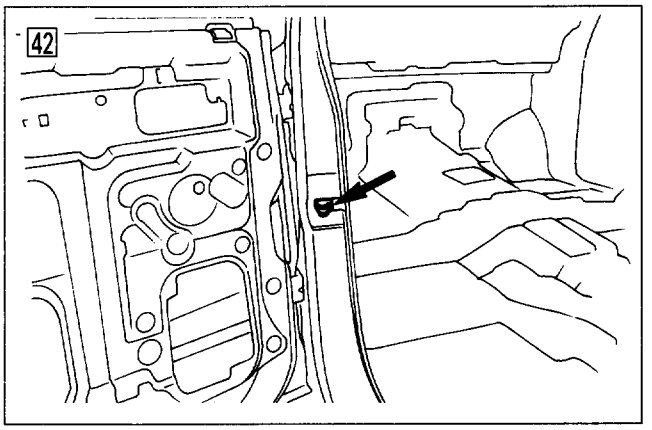
42

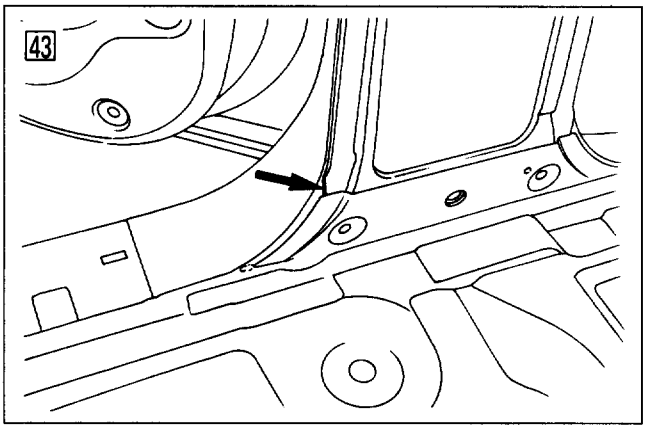
43

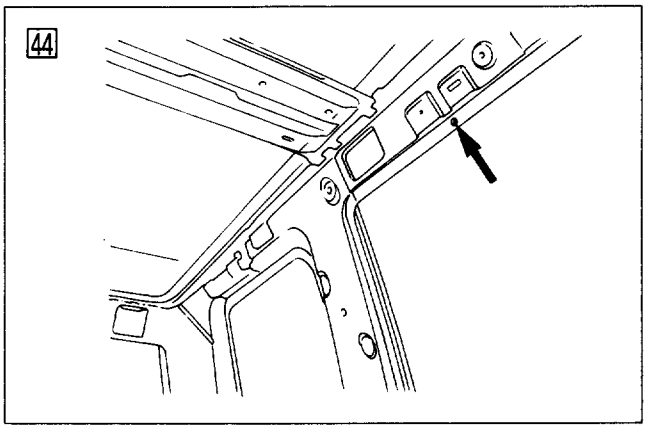
44

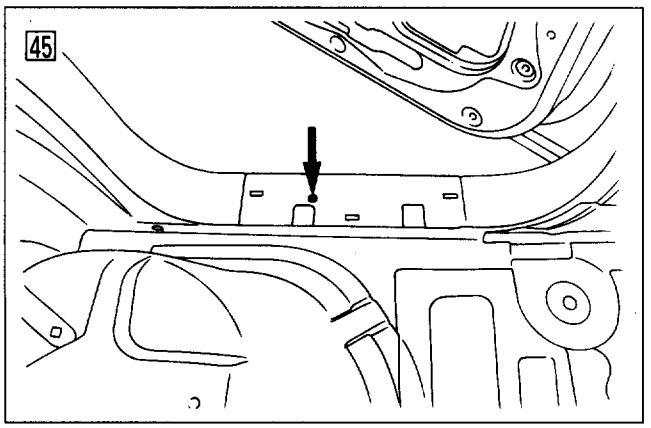
45

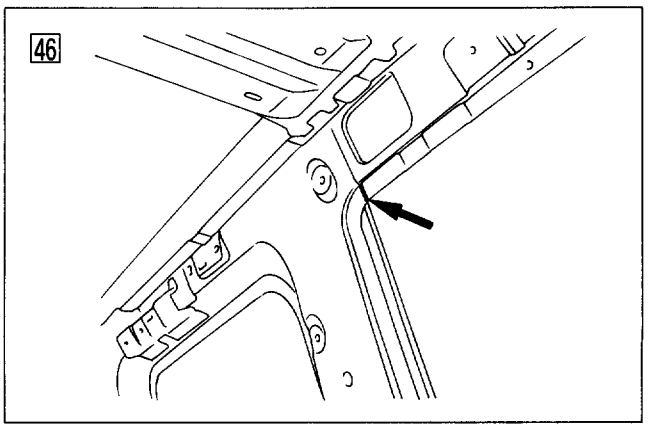
46

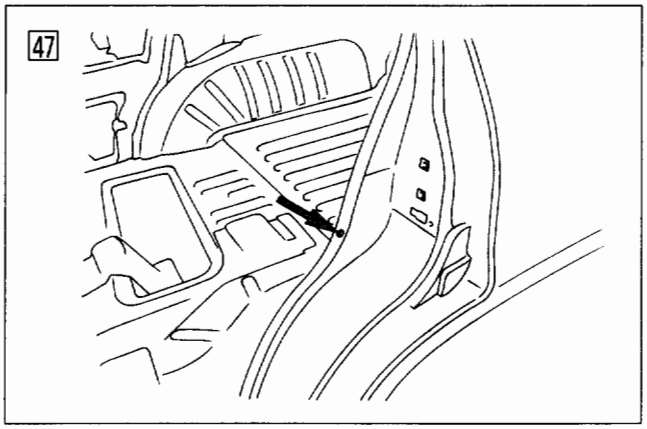
47

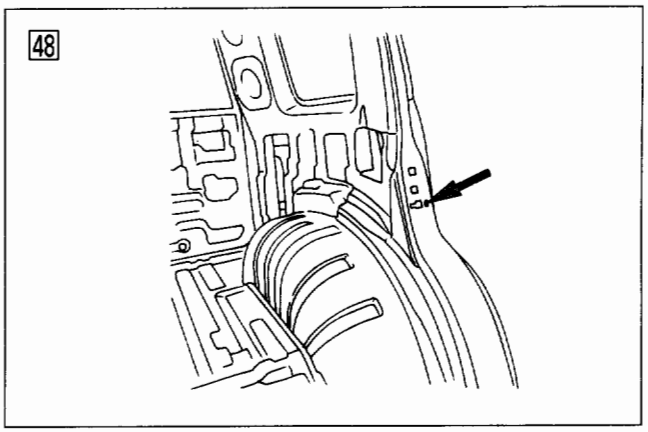
48

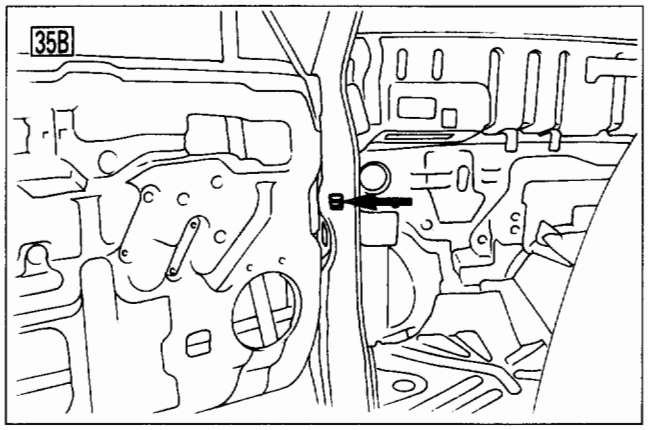
35B

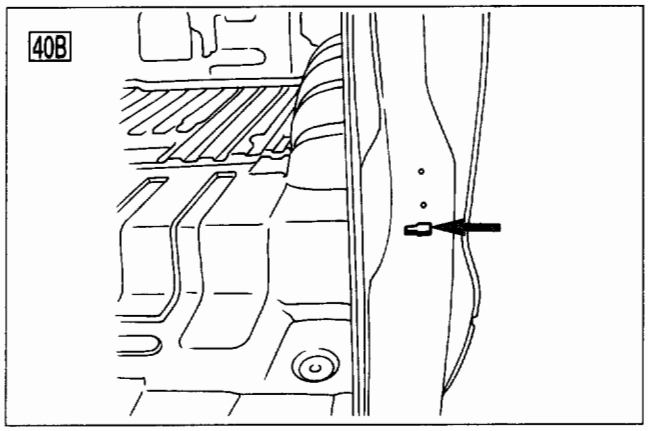
40B

WINDOW GLASS

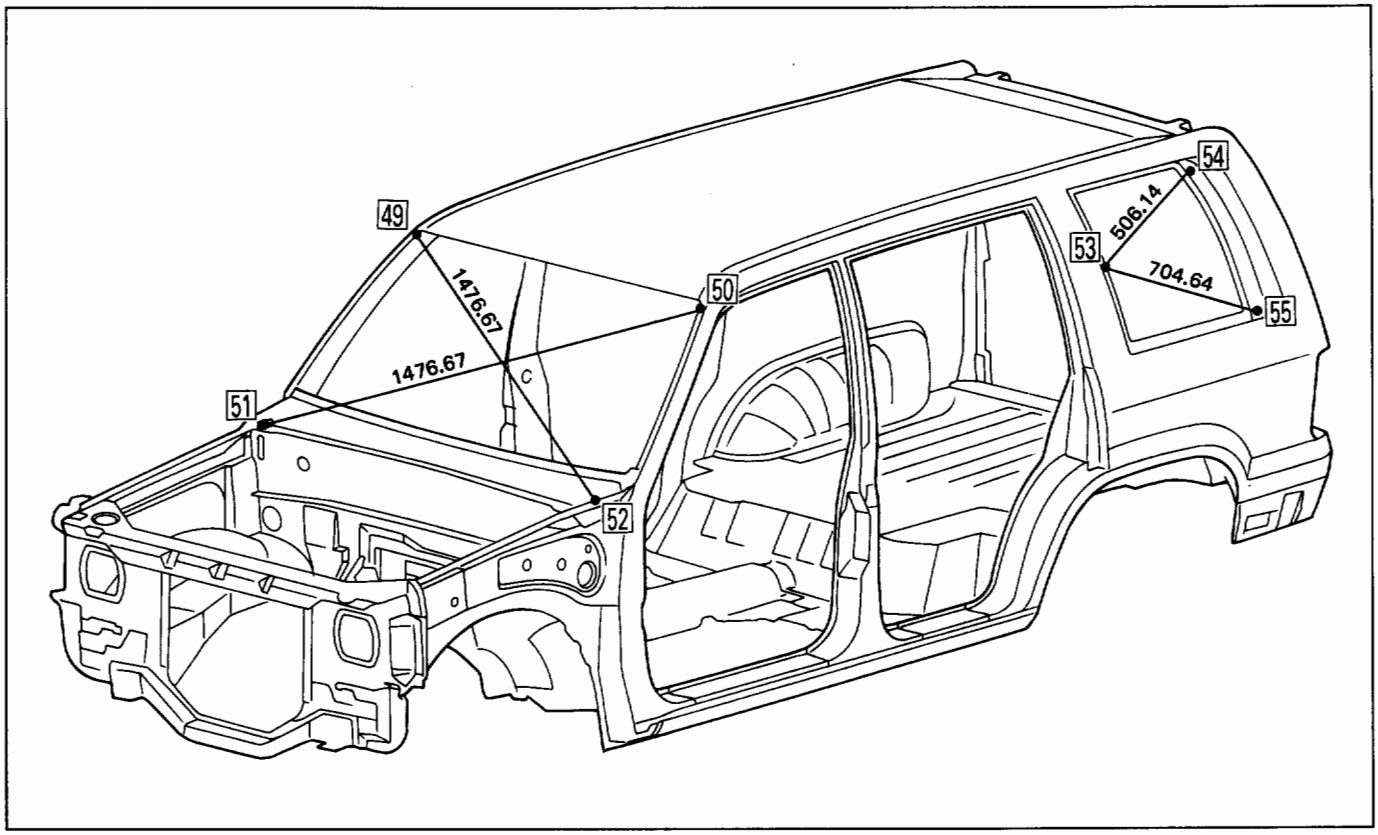

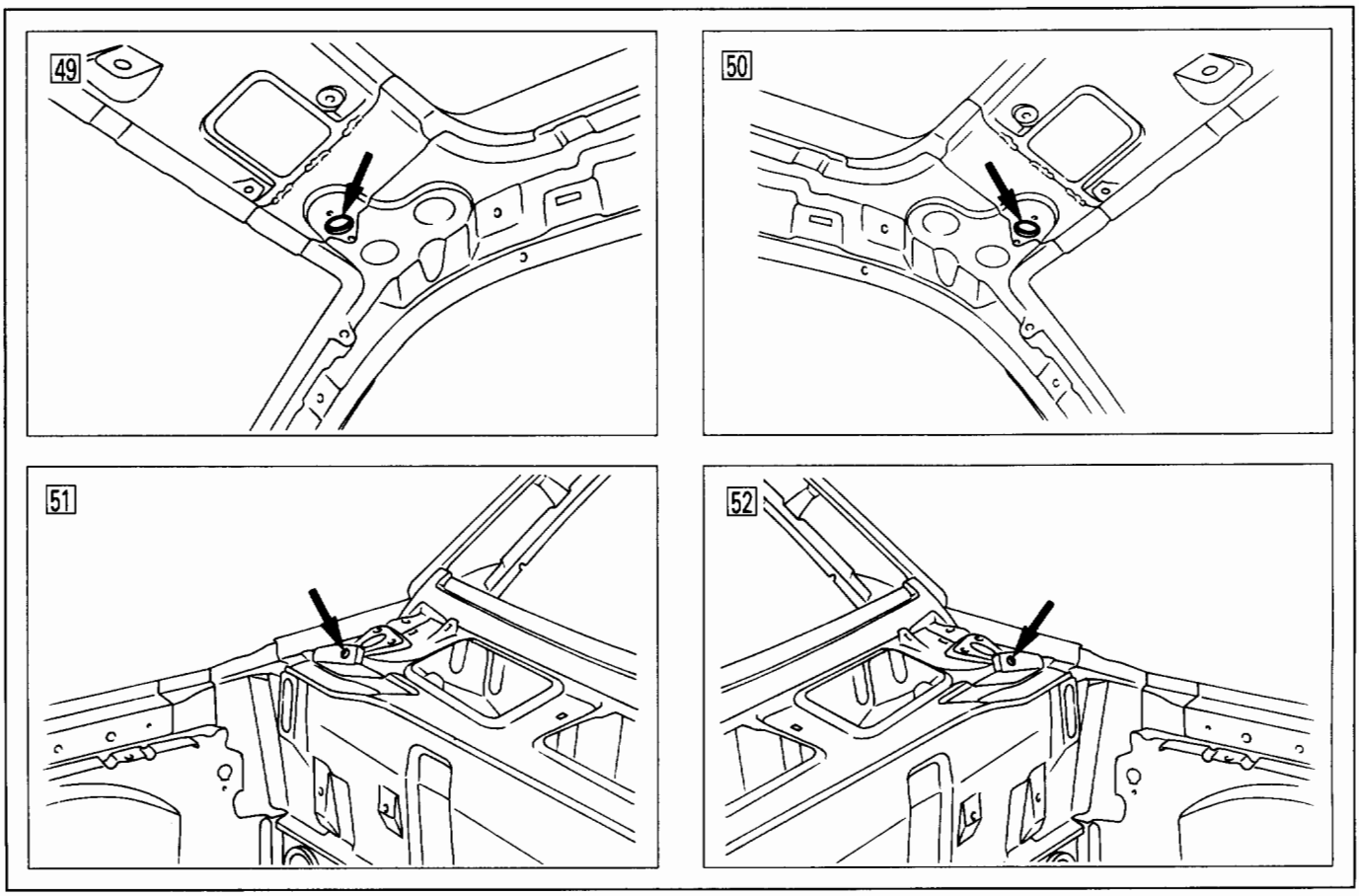

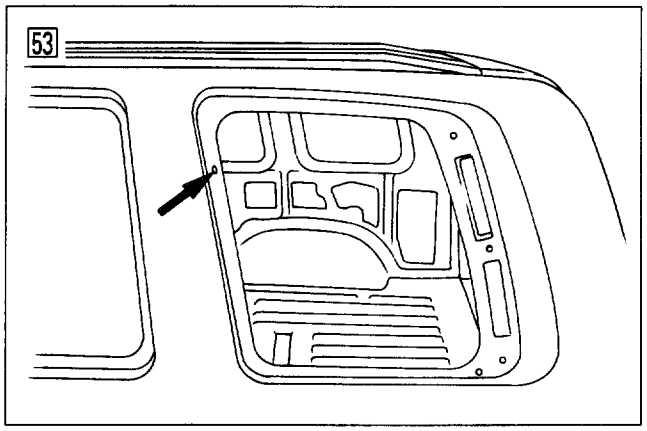
53

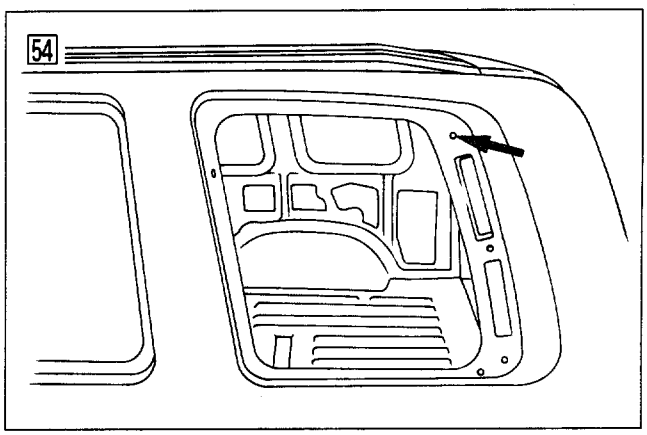
54

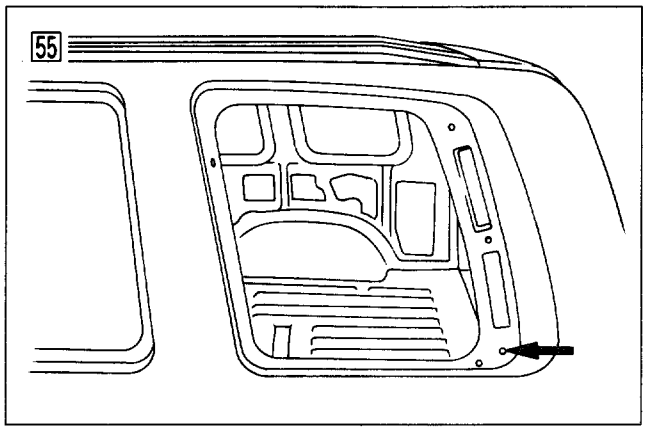
55

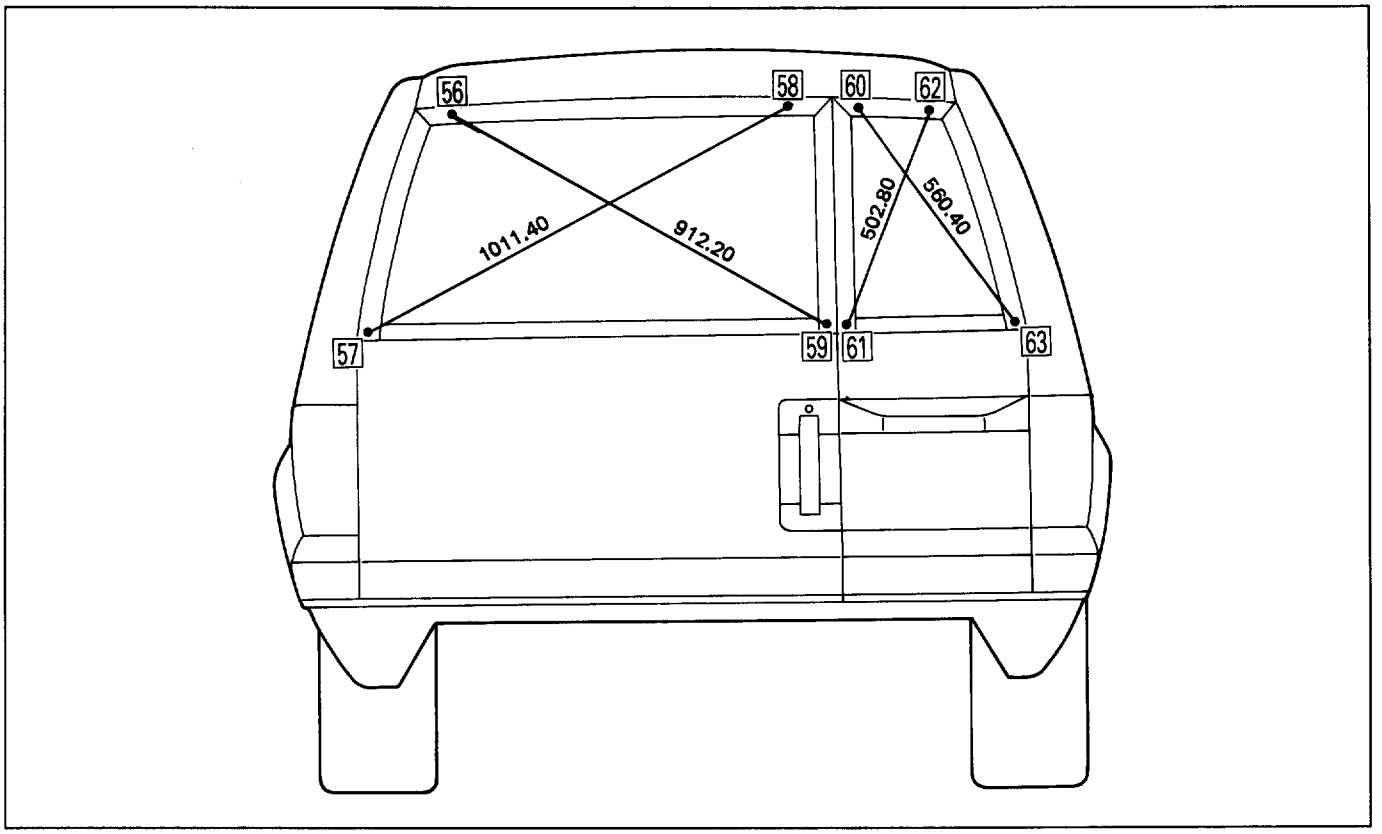
56
58
60
62
1011.40
912.20
502.80
560.40
57
59
61
63

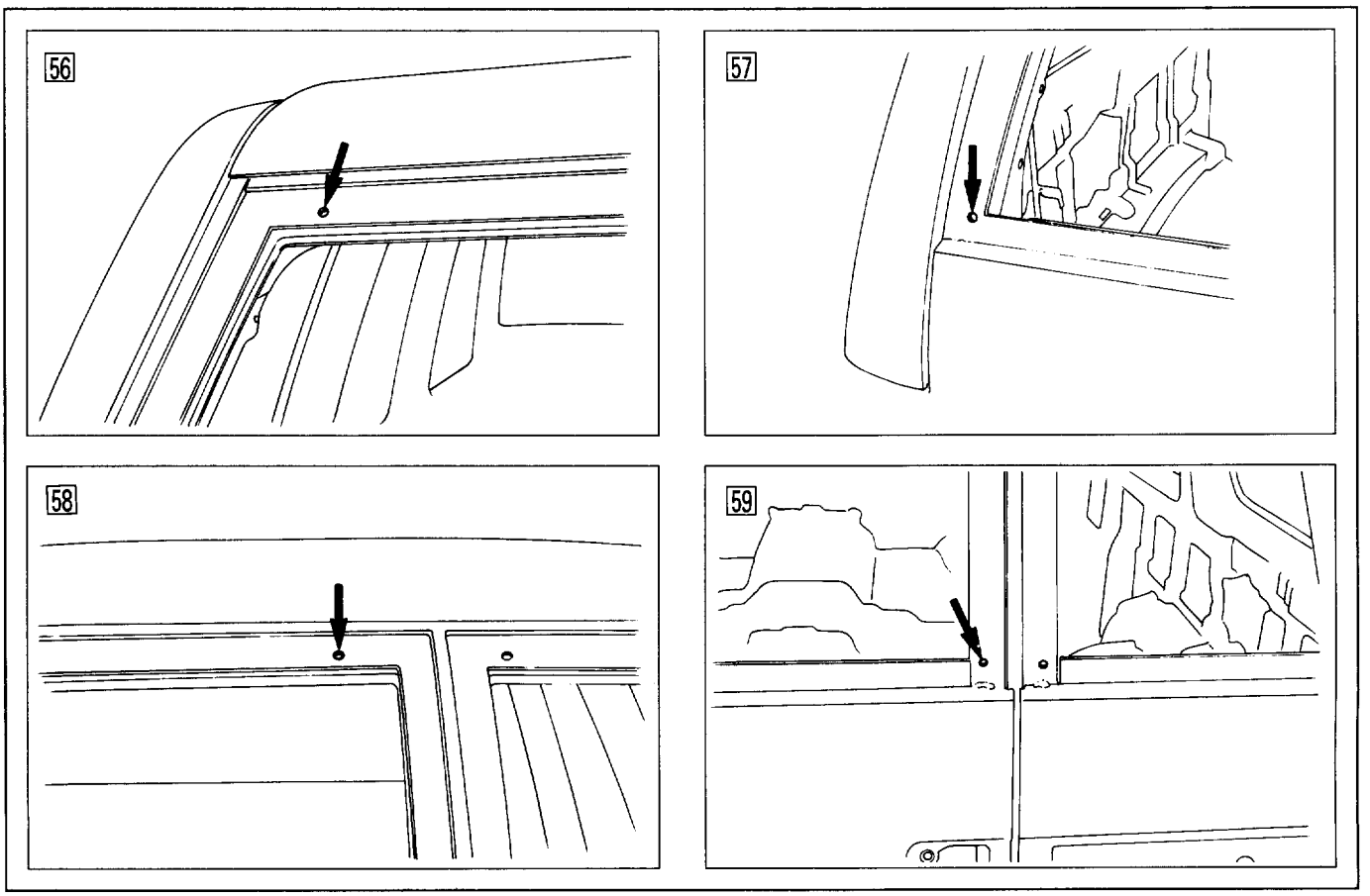
56
57
58
59

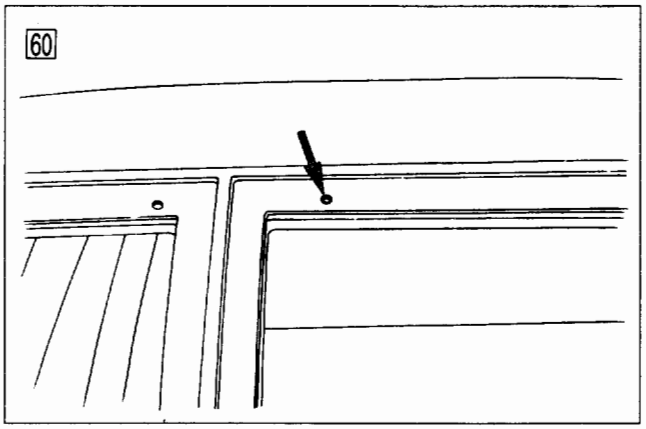
60

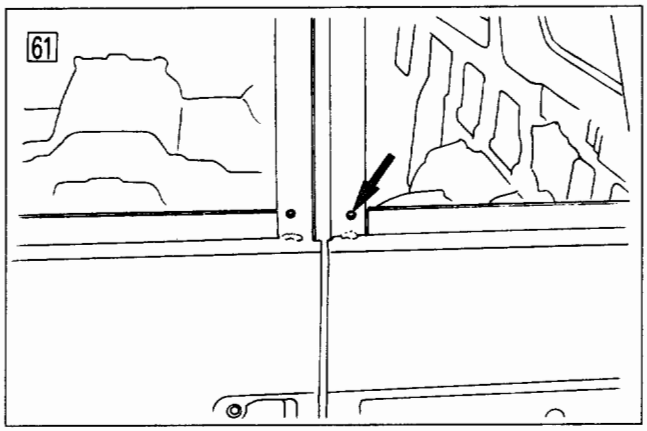
61

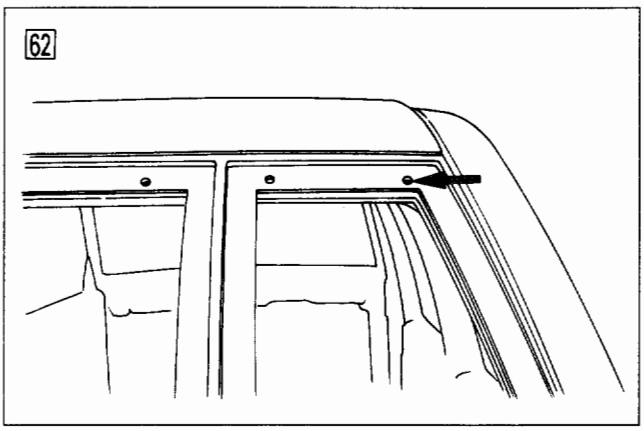
62

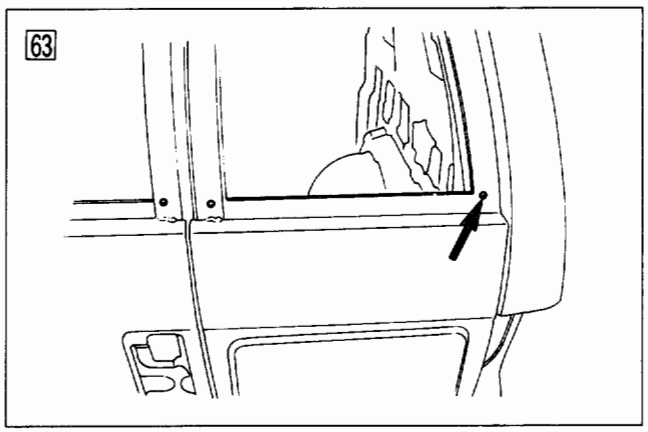
63

FRONT END

DASH SIDE TRIM PANEL

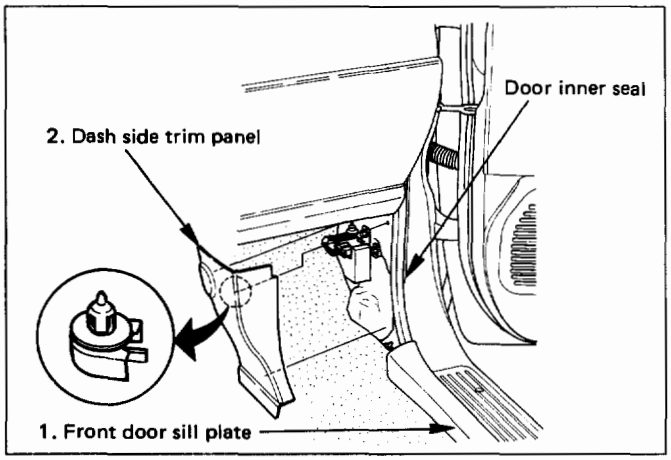

Fig. 10-1

REMOVAL

Preparation: Disconnect the battery ground cable

1. **Front door sill plate**
2. **Dash side trim panel**
   - Turn up the door inner seal of the body panel to remove the clips of the trim panel.
   - Be careful not to damage the harness and controller on the back of the trim panel.

INSTALLATION

To install, follow the removal steps in the reverse order, noting the following point.

1. Lap the door inner seal over the trim panel to install them securely to the body panel.

ASSIST GRIP

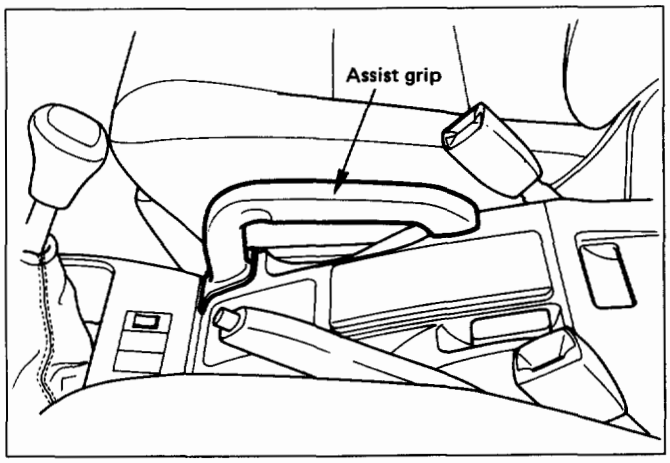

Fig. 10-2

REMOVAL AND INSTALLATION

- Refer to "CONSOLES" removal procedure in this section.

CONSOLES

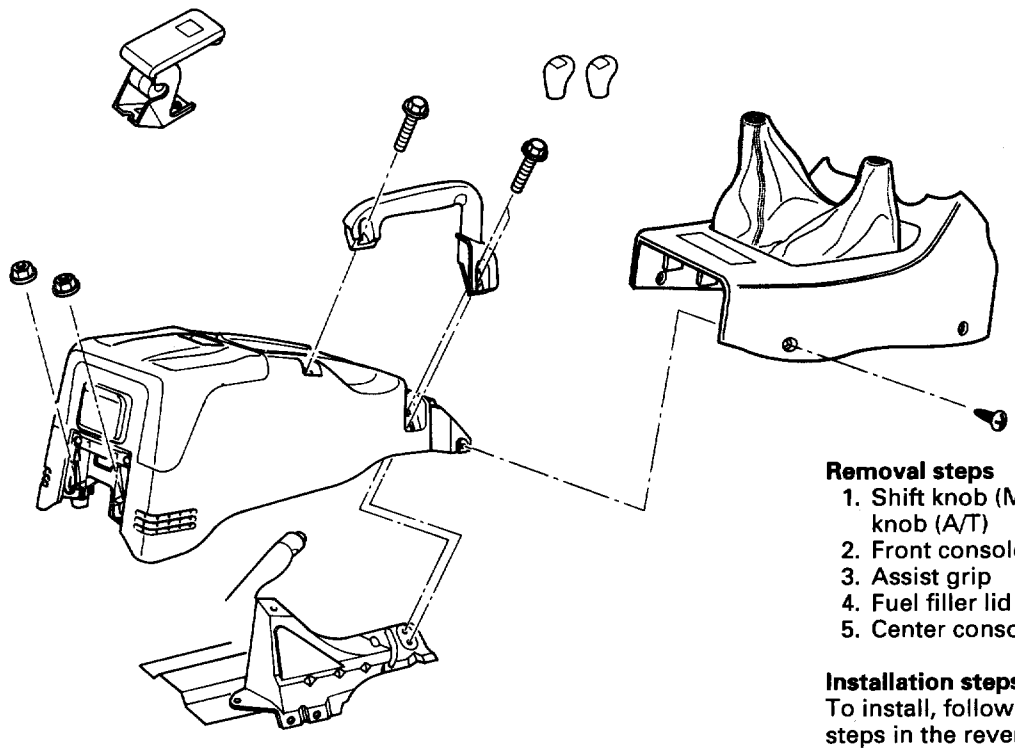

Removal steps
1. Shift knob (M/T) / Transfer knob (A/T)
2. Front console assembly
3. Assist grip
4. Fuel filler lid opener
5. Center console assembly

Installation steps
To install, follow the removal steps in the reverse order.

Fig. 10-3

REMOVAL

Preparation: Disconnect the battery ground cable

1. **Shift knob (M/T) / Transfer knob (A/T)**
2. **Front console assembly**
   - Remove 4 fixing screws and disconnect switch connectors .
3. **Assist grip**
   - Remove 3 bolts.
4. **Fuel filler lid opener**
   - Remove fuel filler lid opener and disconnect the cable.(Fig.10-4)

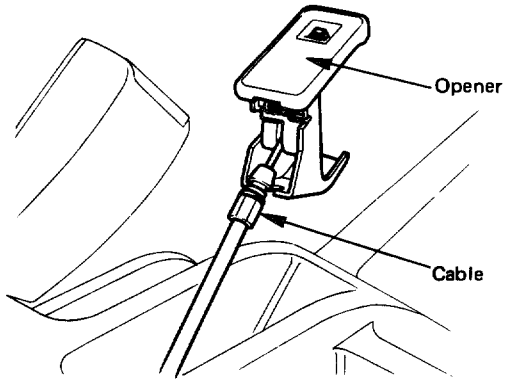

Fig. 10-4

5. **Center console assembly**
   - Remove 2 fixing screws on the front side. Open the rear cover, remove 2 nuts, then the center console assembly.
   - Remove rear heater duct from center console. (Fig.10-5)

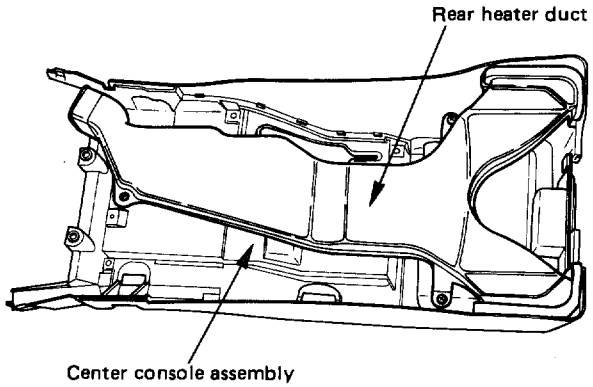

Fig. 10-5

INSTALLATION

To install, follow the removal steps in the reverse order.

INSTRUMENT PANEL ASSEMBLY

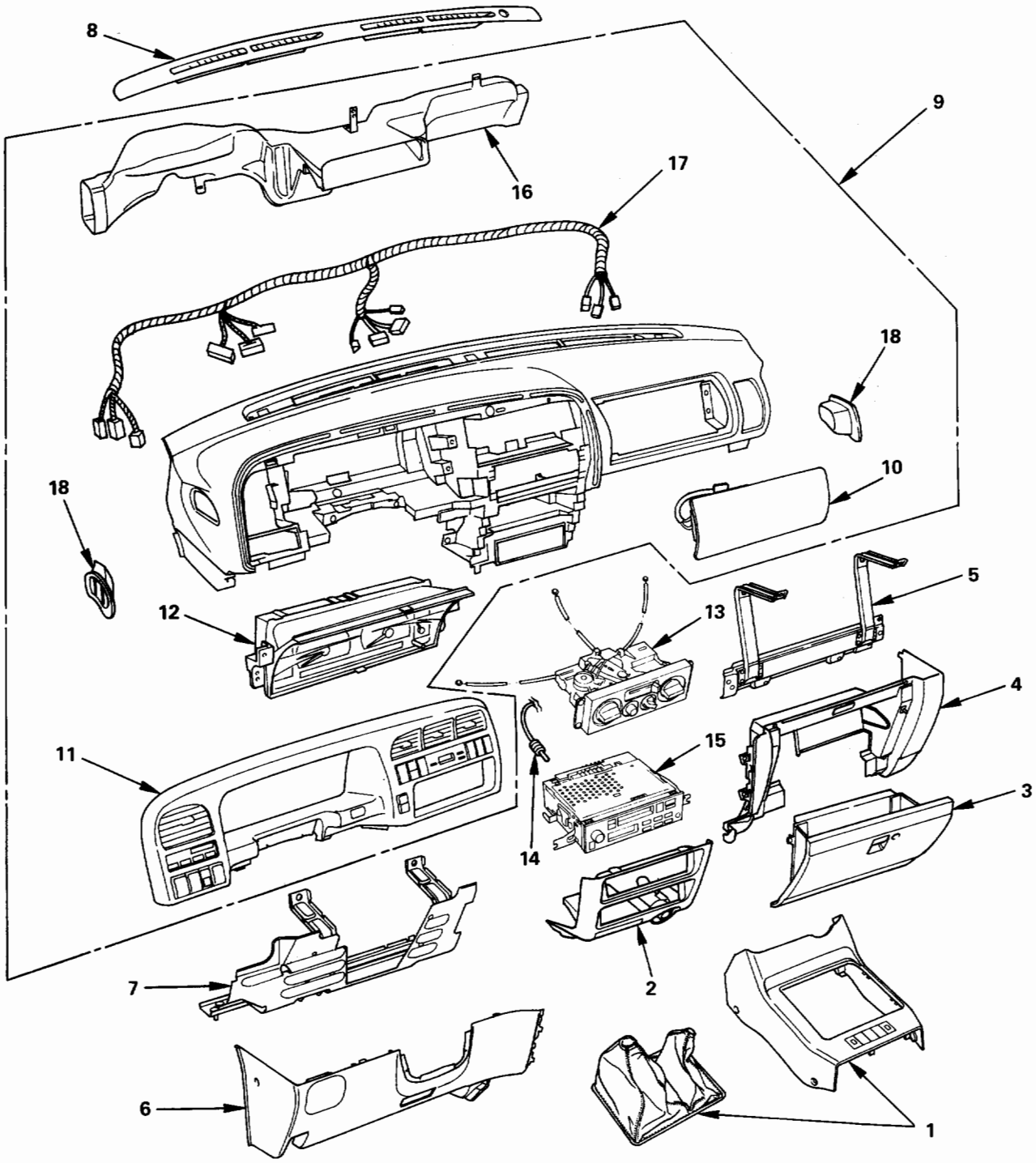

Removal steps

1. Front console assembly
2. Lower cluster assembly
3. Glove box
4. Instrument panel passenger lower cover assembly
5. Passenger knee bolster reinforcement assembly
6. Instrument panel driver lower cover assembly
7. Driver knee bolster assembly
8. Front defroster grille
9. Instrument panel assembly
10. Passenger inflator module
11. Instrument panel cluster assembly
12. Meter assembly
13. Control lever assembly
14. Radio antenna cable
15. Radio assembly
16. Vent duct assembly
17. Instrument harness assembly
18. Side defroster grille

Installation steps

To install, follow the removal steps in the reverse order.

Fig. 10-6

REMOVAL

Caution:

- For precautions on installation or removal of SRS - air bag system, refer to section 9J "Supplemental Restraint System (SRS) - AIR BAG".

Preparation: Disconnect battery ground cable

1. **Front console assembly**
   - Remove 4 fixing screws and disconnect switch connectors .
2. **Lower cluster assembly (Fig.10-7)**
   - Remove 3 fixing screws and disconnect the cigarette lighter and illumination connectors.

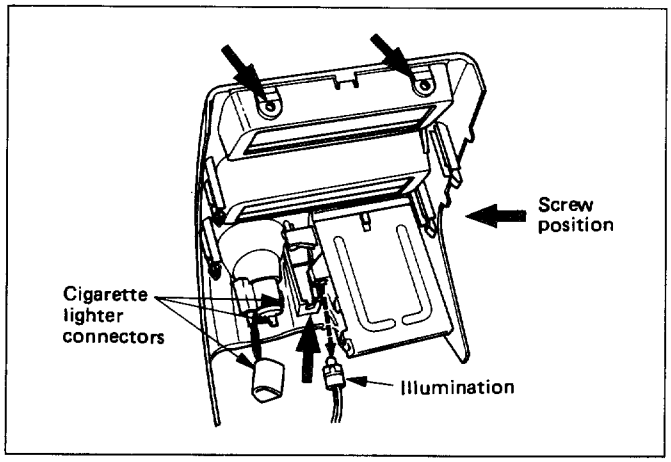

Fig. 10-7

3. **Glove box (Fig.10-8)**
   - Remove 2 fixing screws.

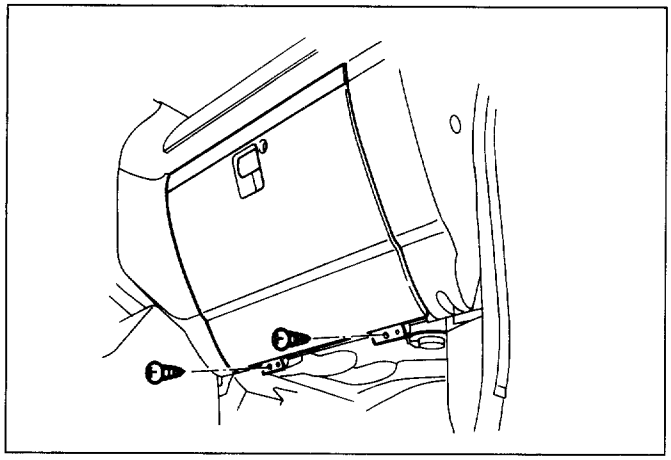

Fig. 10-8

4. **Instrument panel passenger lower cover assembly (Fig.10-9)**
   - Remove 7 fixing screws and 1 clip.

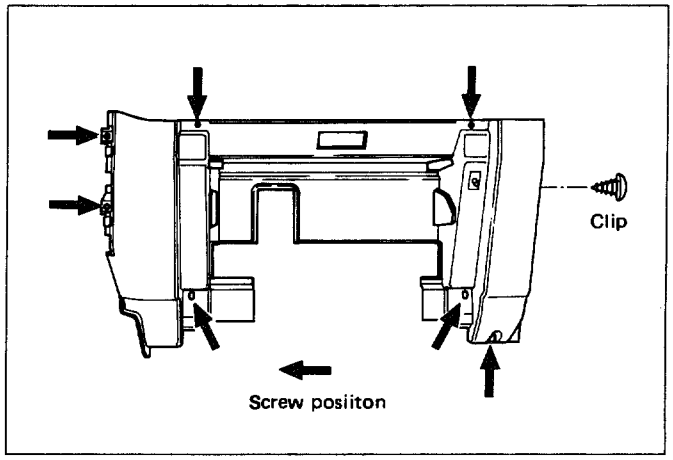

Fig. 10-9

5. **Passenger knee bolster reinforcement assembly (Fig.10-10)**
   - Remove 4 fixing bolts and 4 nuts.

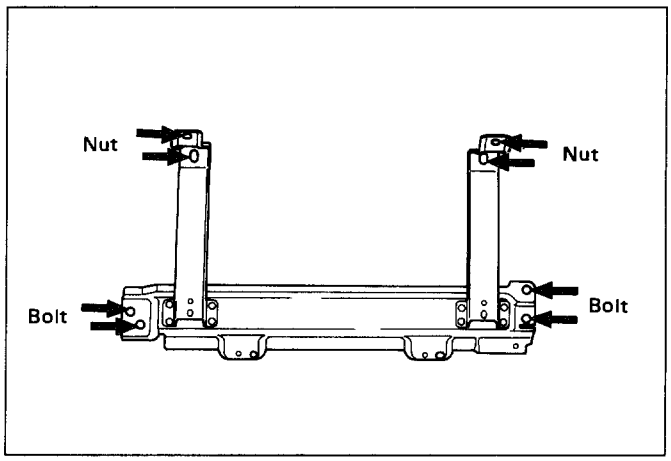

Fig. 10-10

6. **Instrument panel driver lower cover assembly**
   - Remove the Engine hood opener fixing screws.
   - Remove 2 fixing screws, 1 fixing bolt, 1 clip, and pull out fasteners at 4 positions. (Fig.10-11)

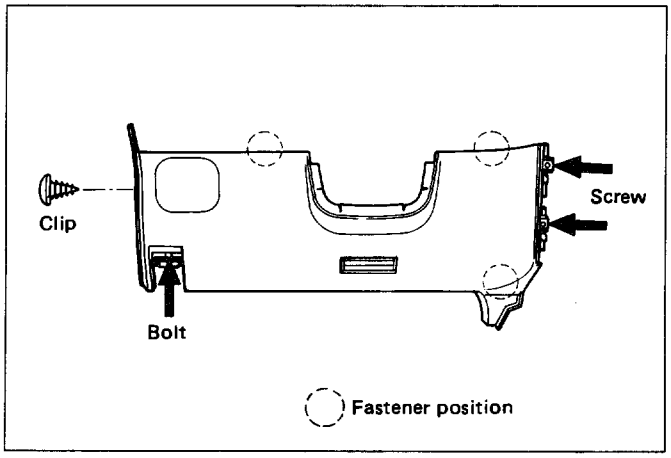

Fig. 10-11

7. **Driver knee bolster assembly (Fig.10-12)**
   - Remove 6 fixing nuts.

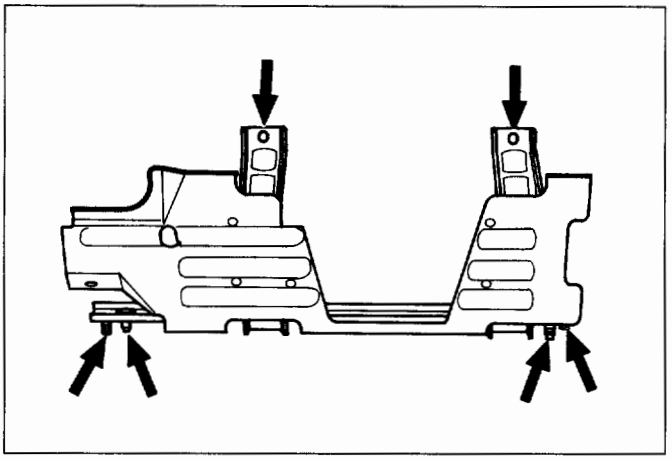

Fig. 10-12

8. **Front defroster grille**
   - To remove, prize 8 claws on the front side toward your side (room side) and raise the grille upward.
9. **Instrument panel assembly**
   - Remove 2 fixing bolts on the SRS adjust bracket and the cross beam under the passenger inflator module.

Caution:

- For precautions on installation or removal of SRS - air bag system, refer to section 9J "Supplemental Restraint System (SRS) - AIR BAG".

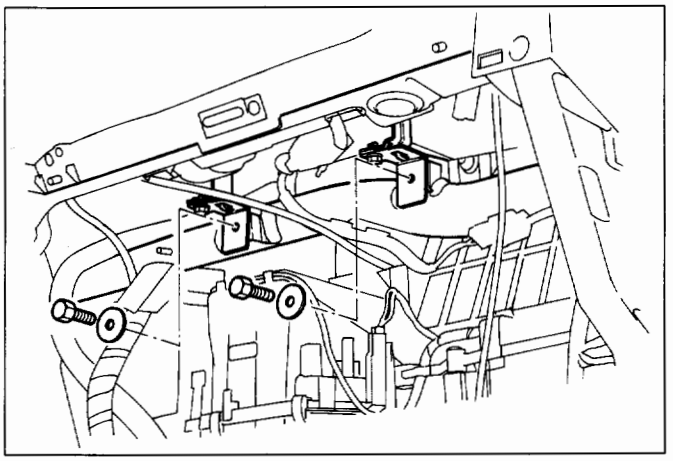

Fig. 10-13

- Disconnect 3 air conditioner control cables on the unit side.
- Remove the instrument harness connectors (5 connectors on driver side and 3 connectors on passenger side), the passenger inflator module connector, the radio antenna cable plug, and the ground cable fixing bolt on the center bracket.
- Remove 4 bolts and 2 nuts under the instrument panel assembly, and the upper left and right bolts and the center nut. (Fig. 10-14)

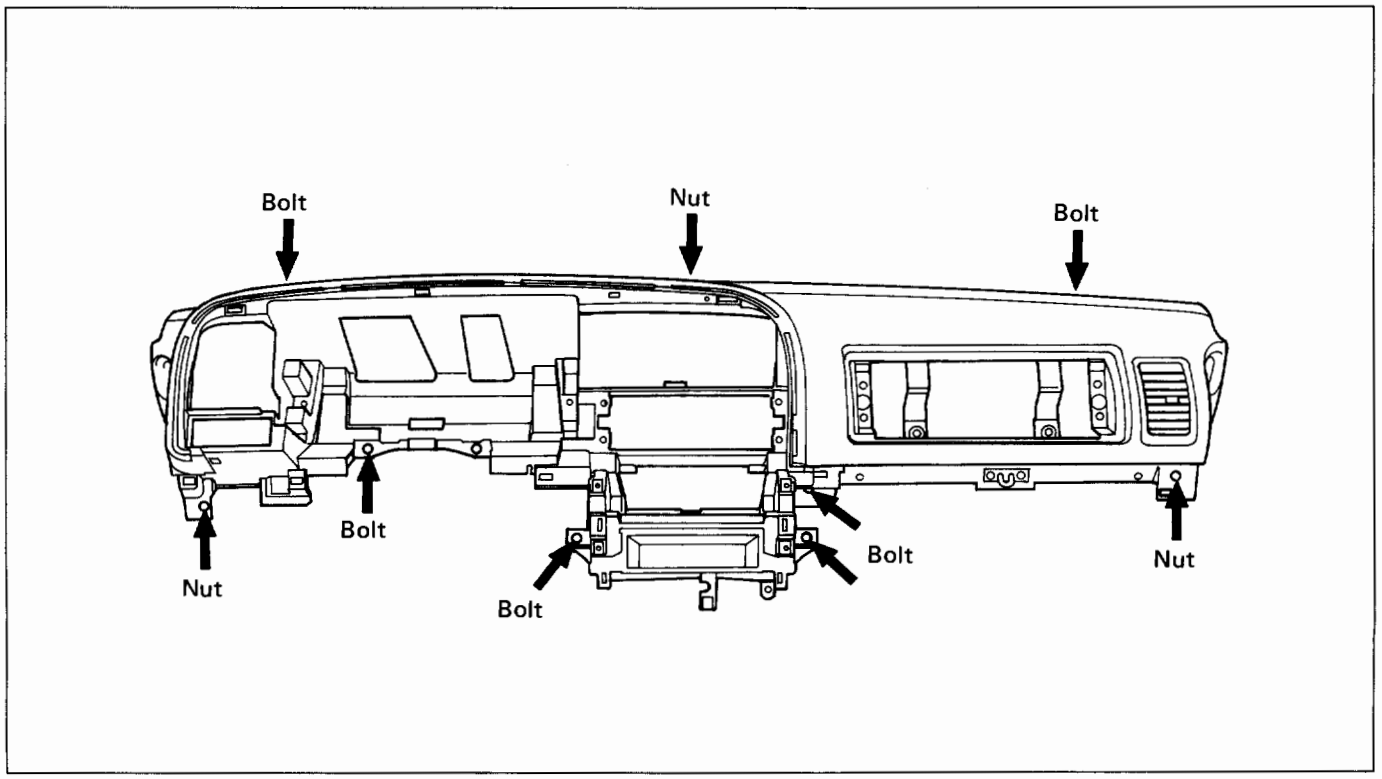

Fig. 10-14

10. Passenger inflator module (Fig.10-15)

- From the back of instrument panel, remove 4 fixing nuts on the passenger inflator module and 2 fixing nuts and washers on the support bracket, then disengage 2 clips and remove the passenger inflator module.

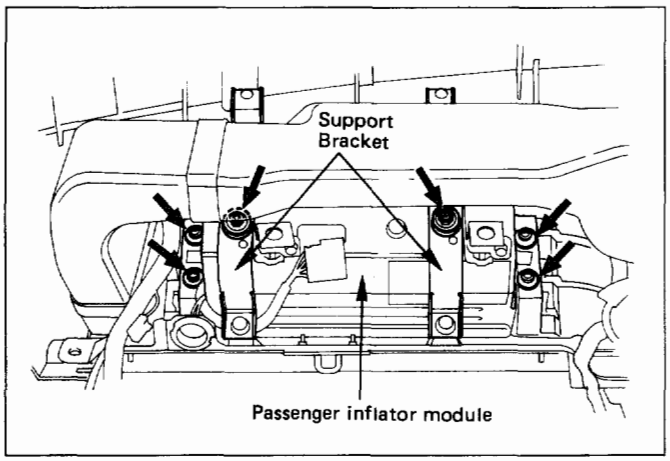

Fig. 10-15

11. Instrument panel cluster assembly (Fig.10-16)

- Remove 5 fixing screws and pull the main unit toword you and remove the clips at 4 positions. Disconnect the switch connectors.

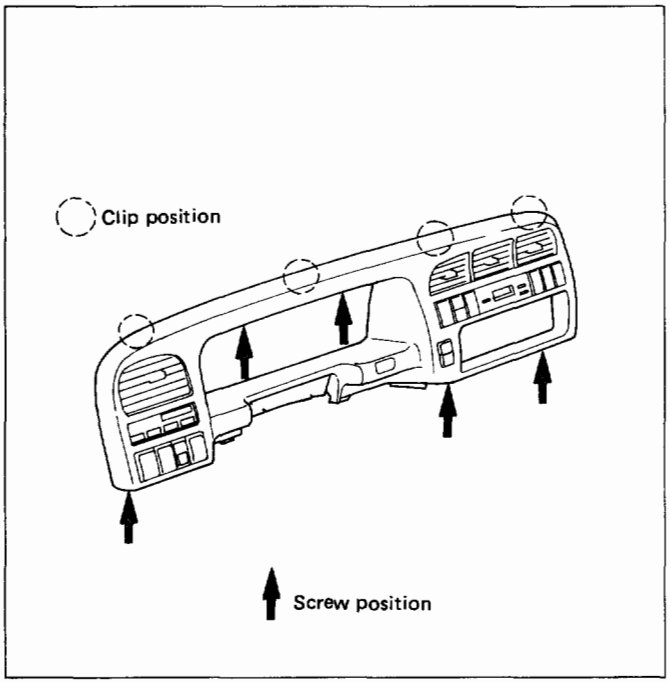

Fig. 10-16

12. Meter assembly (Fig.10-17)

- Remove 4 fixing screws and disconnect the meter harness connectors.

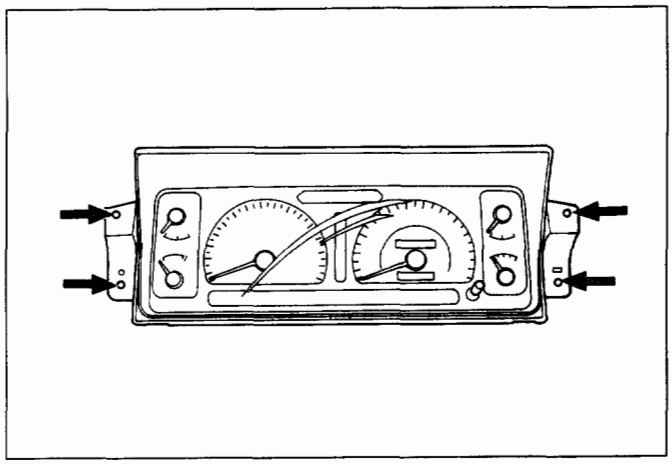

Fig. 10-17

13. Control lever assembly

- Refer to Section 1A "HEATING AND VENTILATION" for Control Lever Assembly removal procedure.

14. Radio antenna cable

15. Radio assembly

- Remove 4 fixing screws.

16. Vent duct assembly

- Remove 5 fixing screws.

17. Instrument harness assembly

- Remove 4 fixing screws, fasteners at 4 positions and the clips at 7 positions.

18. Side defroster grille

Note:

- Though removal of each item is described above, any order of removal steps is possible when items of 12 through 18 are removed from 11. Instrument panel assembly. Also, for the order in which each item contained in 9. Instrument panel assembly is removed individually, refer to the table on the next page.

INSTALLATION

To install, follow the removal steps in the reverse order.

ORDER OF REMOVAL/INSTALLATION STEPS FOR EACH ITEM

Removal Item	Removal Procedure	Removal Step
1. Front console assembly	Shift knob(M/T), Power&Winter SW(A/T), Transfer knob, Seat heater/Miller SW conn. and 4 screws	
2. Lower cluster assembly	3 screws, Ciger lighter conn. and Ashtray illumination conn.	1→2
3. Glove box	2 screws	
4. Instrument panel passenger lower cover	7 screws and 1 clip	1~3→4
5. Passenger knee bolster reinforcement	4 nuts & 4 bolts	1~5
6. Instrument panel driver lower cover	Engine hood opener fixing screw, 2 screws, 1 bolt, 1 clip and fasteners at 4 position.	1→2→6
7. Driver knee bolster	6 nuts	1→2→6→7
8. Front defroster grille	Clows at 8 position	1~3→4
9. Instrument panel assembly	2 bolts (SRS adjust bracket~Cross beam), A/C control cable (Unit side at 3 position), Instrument harness conn. (Driver side 5 position, Assist side 3 position), SRS module conn., Radio antenna juck, Earth cable, 9 bolts and 3 nuts	1~9
10. Passenger inflator module	4 nuts (SRS module~Instrument panel), 2 nuts and 2 washers (SRS module~support bracket) and 2 clips	1~5→10
11. Instrument panel cluster	5 screws, fastener at 4 position and each SW conn.	1→2→6→11
12. Meter assembly	4 screws and connectors	1→2→6→11→12
13. A/C control panel assembly	4 screws and connectors	1~7→11→13
14. Radio antenna cable		1~7→11→13→14
15. Radio assembly	4 screws	1~7→11→13→14→15
16. Vent duct assembly	5 screws	1~9→15→16
17. Instrument harness assembly	4 screws, fasteners at 4 position, and clips at 7 position.	1~9→16
18. Side defroster grille		

M/T; Manual Transmission
A/T; Automatic Transmission
SRS; Supplemental Restraint System
A/C; Air Conditioning

CROSS BEAM ASSEMBLY

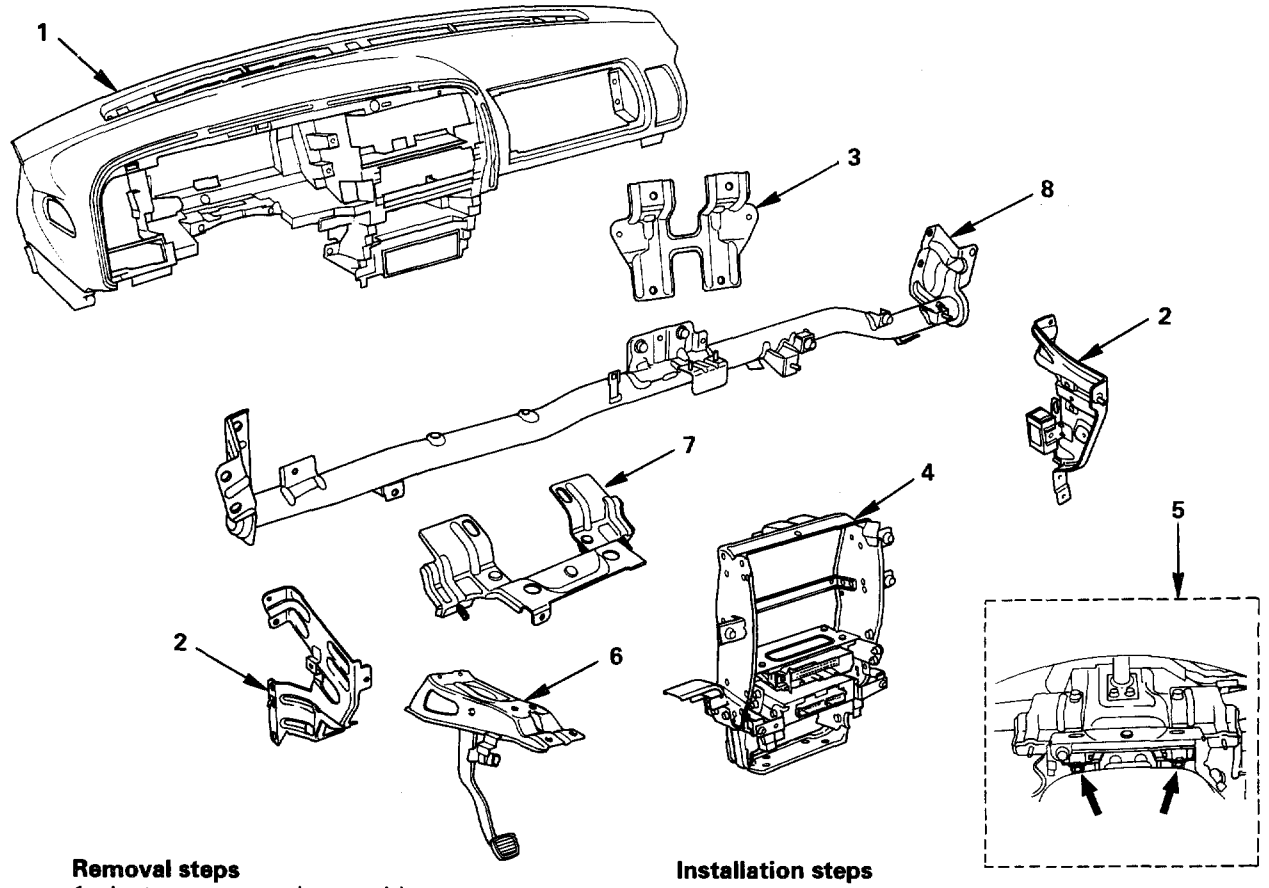

Removal steps
1. Instrument panel assembly
2. Side support bracket assembly (LH/RH)
3. Cross beam center bracket
4. Instrument panel center bracket
5. Steering columm fixing bolts
6. Brake pedal mounting bracket assembly
7. Steering support bracket assembly
8. Cross beam assembly

Installation steps
To install,follow the removal steps in the reverse order.

ECM; Electric Control Module
EBCM; Electric Brake Control Module
DERM; Diagnostic Energy Reserve Module
SRS; Supplymental Restraint System

Fig. 10-18

REMOVAL

Preparation: Disconnect battery ground cable.

1. **Instrument panel assembly**
   - Refer to "INSTRUMENT PANEL ASSEMBLY" removal procedure in this section.
2. **Side support bracket assembly (LH/RH)**
   - Remove 4 fixing bolts on both sides.
3. **Cross beam center bracket**
   - Remove 2 fixing nuts and Arming sensor harness clip.
4. **Instrument panel center bracket**
   - Disconnect ECM and EBCM connector.
   - Remove the DERM (SRS) with 3 fixing nuts.

Caution:
- For precautions on installation/removal of SRS-related air bag devices, refer to Section "SRS Repairing Procedures".
- Remove 2 fixing nuts (upper) and 4 fixing bolts (lower). (Fig.10-19)

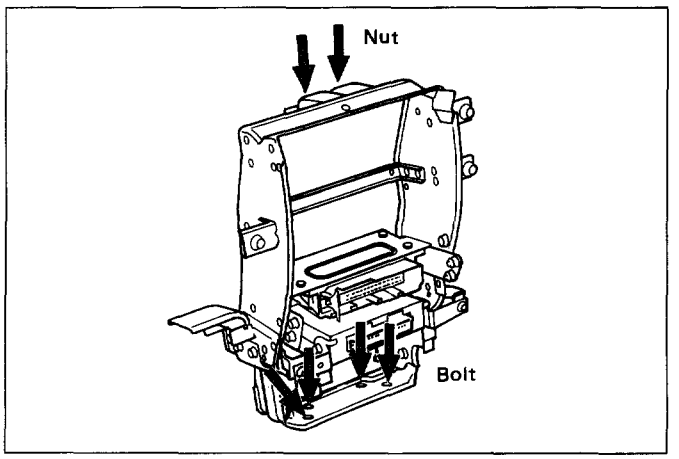

Fig. 10-19

5. **Steering column fixing bolts (Fig.10-20)**
   - Remove 2 fixing bolts. (Fig.10-20)

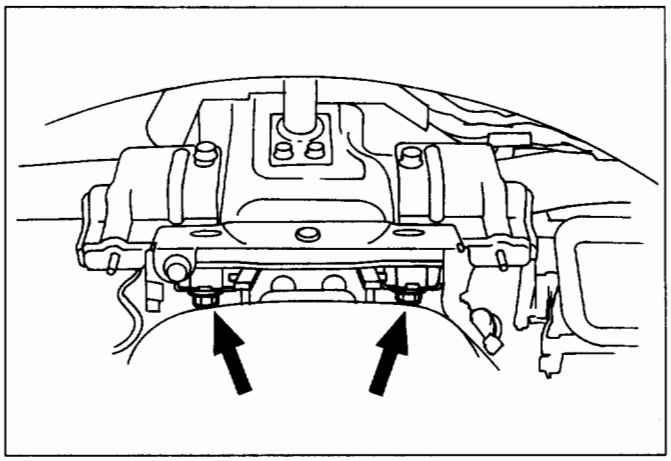

Fig. 10-20

6. **Brake pedal mounting bracket assembly**
   - Disconnect 2 nuts and connectors, and remove antitheft controller.
   - Disconnect the brake pedal link and the brake switch, and remove 4 fixing bolts and nuts on the bracket. (Fig. 10-21)

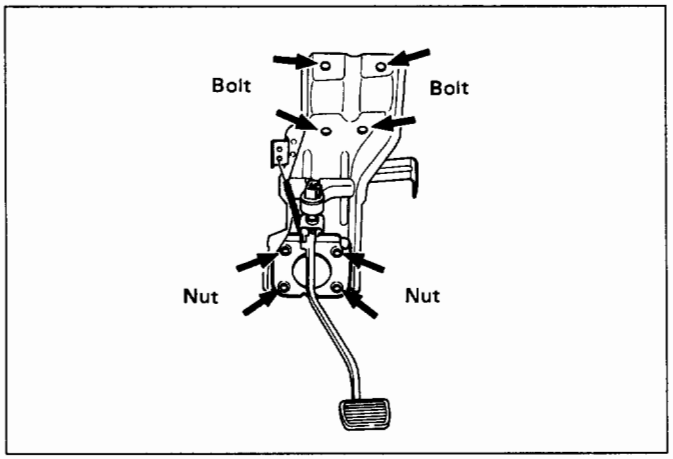

Fig. 10-21

7. **Steering support bracket assembly**
   - Remove 2 fixing bolts (upper side) and 3 fixing nuts (lower side).

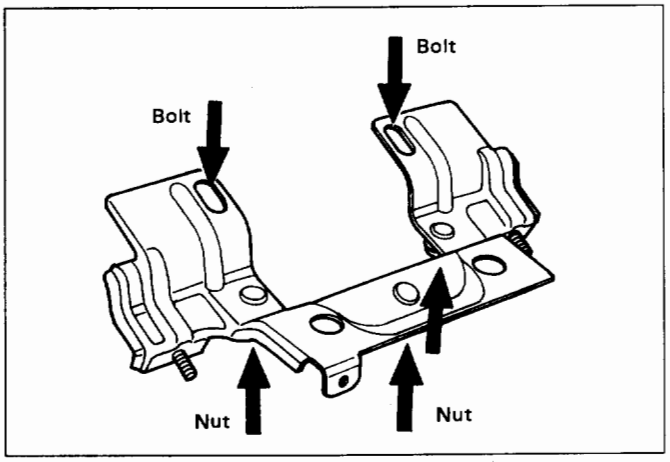

Fig. 10-22

8. **Cross beam assembly**
   - Disconnect the harness clips from cross beam assembly, and remove 2 fixing bolts on both sides and 2 fixing nuts at center.

INSTALLATION

To install, follow the removal steps in the reverse order.

DOORS

FRONT DOOR ASSEMBLY

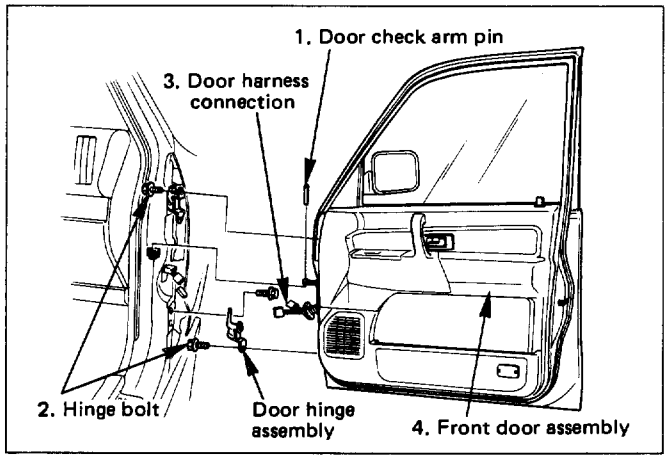

Fig. 10-23

REMOVAL

Preparation: Disconnect the battery ground cable

1. **Door check arm pin (Fig. 10-24)**

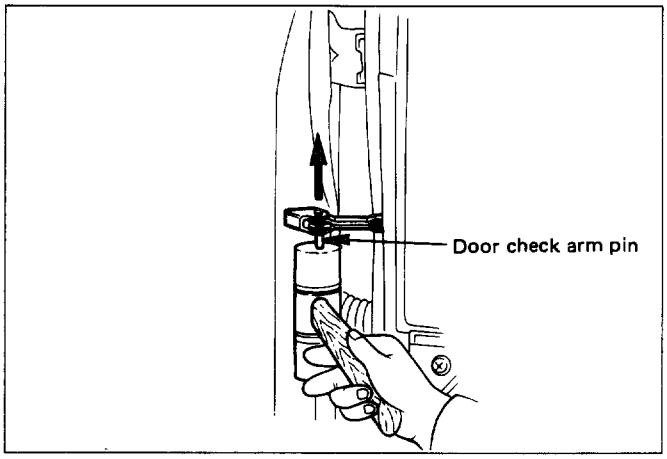

Fig. 10-24

2. **Hinge bolt**
   - Align the hinge bolt to the door side hinge and put a maker on it.
3. **Door harness connection**
   - Pull the door harness grommet out and disconnect the harness connection (Fig. 10-25).

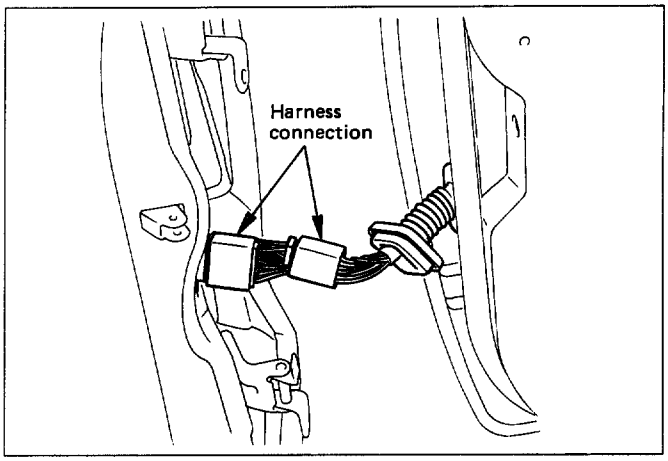

Fig. 10-25

4. **Front door assembly**

INSTALLATION

To install, follow the removal steps in the reverse order, noting the following points.

1. Align the door fitting to the body by referring to "BODY DIMENSIONS" in this section.
2. Tighten the door hinge bolts to the specified torque.

Torque	N·m (lb·ft)	34 (25)

3. Apply chassis grease to the door check arm pin and door hinge moving surface.

REAR DOOR ASSEMBLY

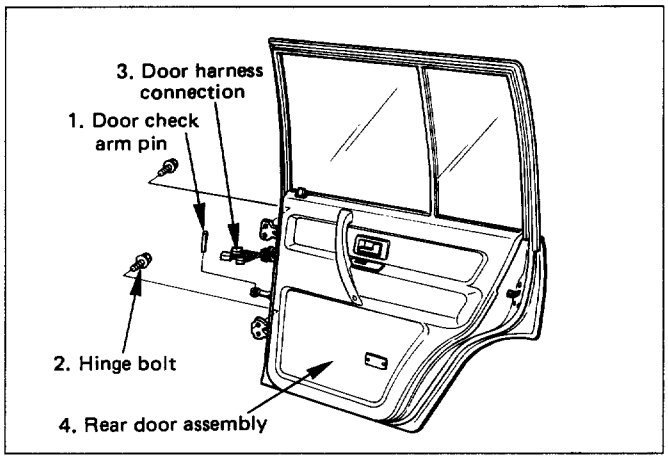

Fig. 10-26

REMOVAL

Preparation: Disconnect the battery ground cable
Apply an setting mark on the body side hinge.

1. **Door check arm pin (Fig. 10-27)**
2. **Hinge bolt**
   - Open the front door and remove the body side hinge bolts. (Fig. 10-28)
3. **Door harness connection**
   - Pull the door harness grommet out and disconnect the door harness connection. (Fig. 10-29)
4. **Door assembly**

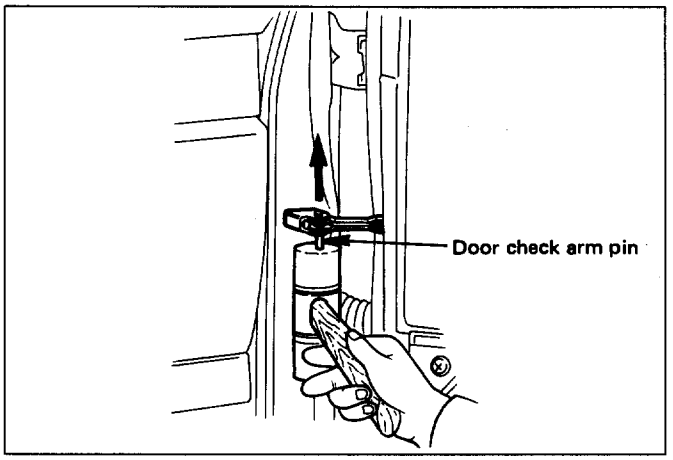

Fig. 10-27

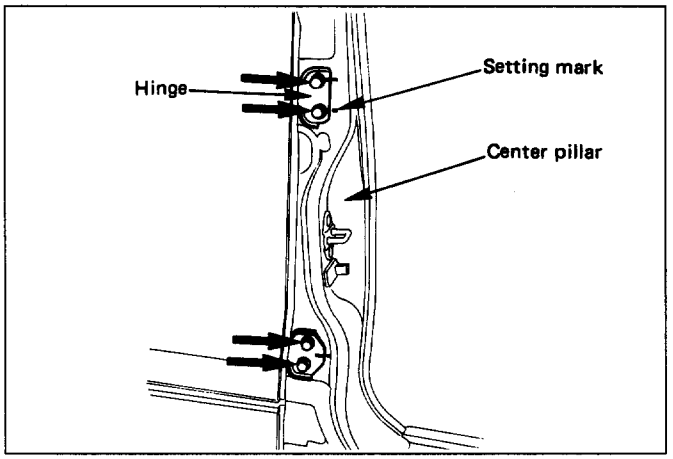

Fig. 10-28

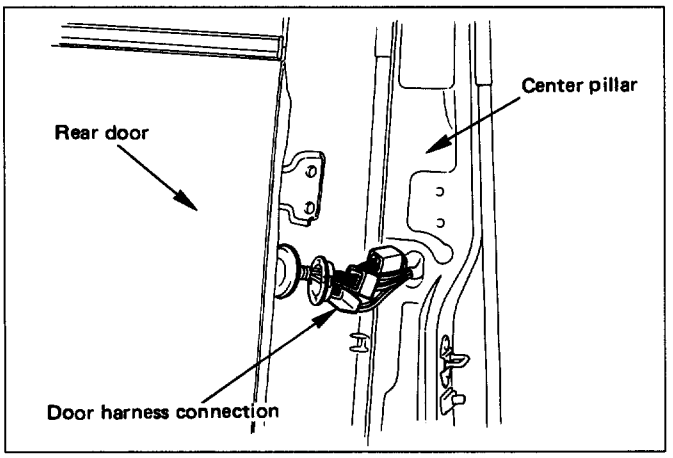

Fig. 10-29

INSTALLATION

To install, follow the removal steps in the reverse order, noting the following points.

1. Align the door fitting to the body by referring to "BODY DIMENSIONS" in this section.
2. Tighten the door hinge bolts to the specified torque.

Torque	N·m (lb·ft)	34 (25)

3. Apply chassis grease to the check arm pin and door hinge moving surface.

DOOR STRIKERS

ADJUSTMENT (Fig. 10-30)

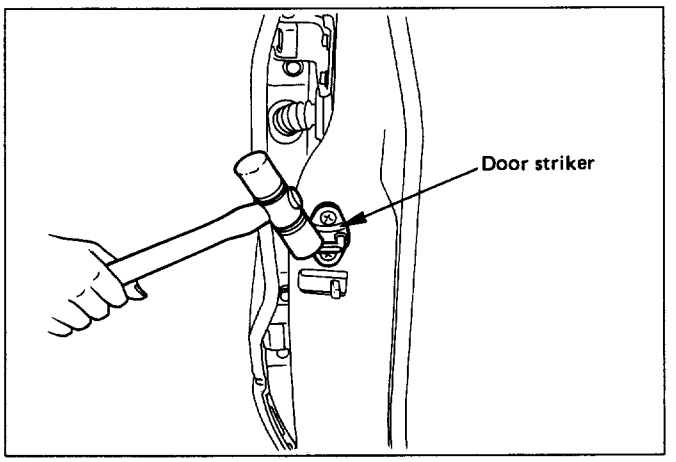

Fig. 10-30

1. Loosen striker screws.
2. Tap with plastic hammer to align.
3. Tighten the striker screws.

Torque	N·m (lb·ft)	15 (11)

DOOR CHECK ARM ASSEMBLY (FRONT & REAR)

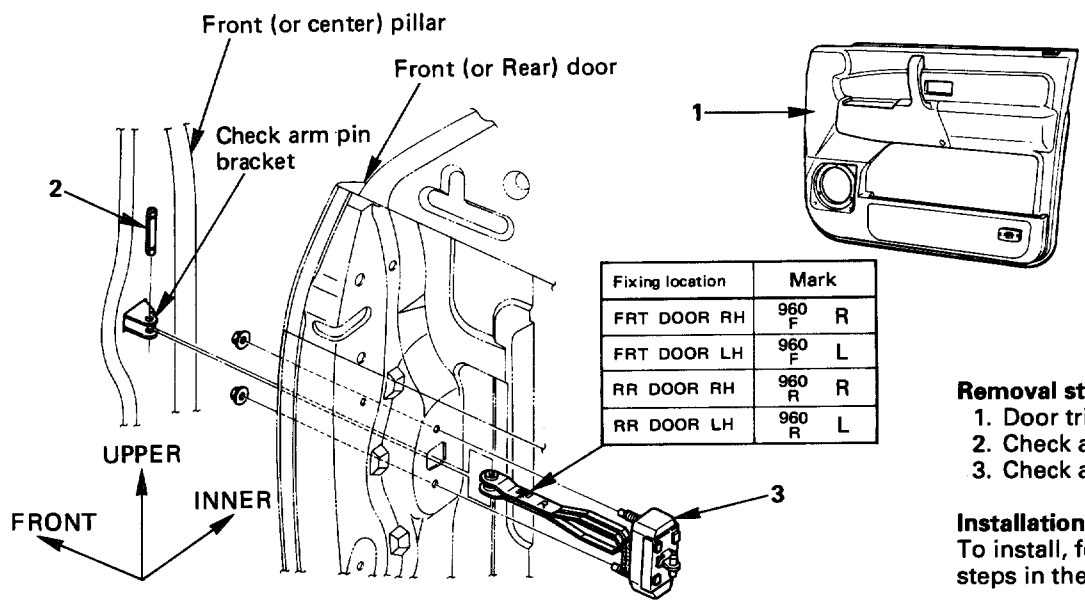

Fixing location	Mark
FRT DOOR RH	960 F R
FRT DOOR LH	960 F L
RR DOOR RH	960 R R
RR DOOR LH	960 R L

Removal steps
1. Door trim panel
2. Check arm pin
3. Check arm assembly

Installation steps
To install, follow the removal steps in the reverse order.

Fig. 10-31

REMOVAL

Preparation: Disconnect the battery ground cable

1. **Door trim panel**
   - Refer to "DOOR TRIM PANEL" removal procedure in this section.
2. **Check arm pin (Fig. 10-24)**
3. **Check arm assembly**
   - Carefully peel off the water proof sheet as much as necessary, for check arm removal.

INSTALLATION

To install, follow the removal steps in the reverse order, noting the following point.

1. When installing the check arm assembly, note its marking to ensure using the appropriate part. (Fig. 10-31)
2. Tighten the check arm fixing nuts to the specified torque.

Torque	N·m (lb·in)	13 (113)

3. Apply chassis grease to the check arm pin moving surface.

FRONT DOOR TRIM PANEL

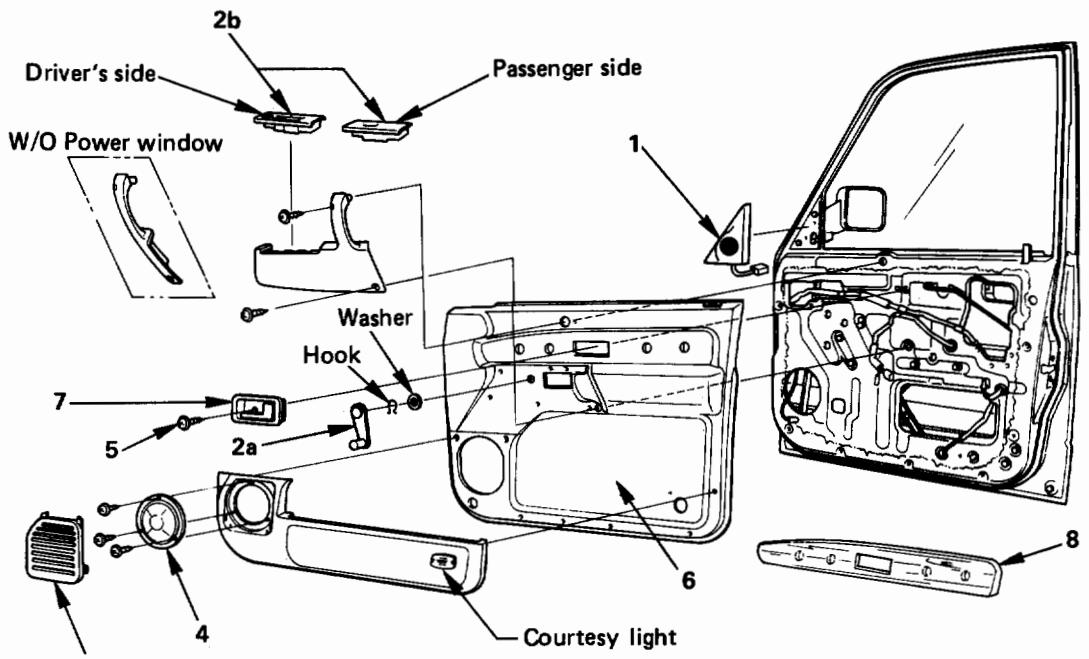

Removal steps
1. Door mirror cover/Tweeter
2a. Regulator handle
2b. Power window switch
3. Speaker cover
4. Front speaker
5. Inside handle fixing screw
6. Door trim panel
7. Inside handle
8. Door wood panel

Installation steps
To install,follow the removal steps in the reverse order.

Fig. 10-32

REMOVAL

Preparation: Disconnect the battery ground cable

1. Door mirror cover/Tweeter

- On a model equipped with a tweeter, remove the connectors. (Fig. 10-33)

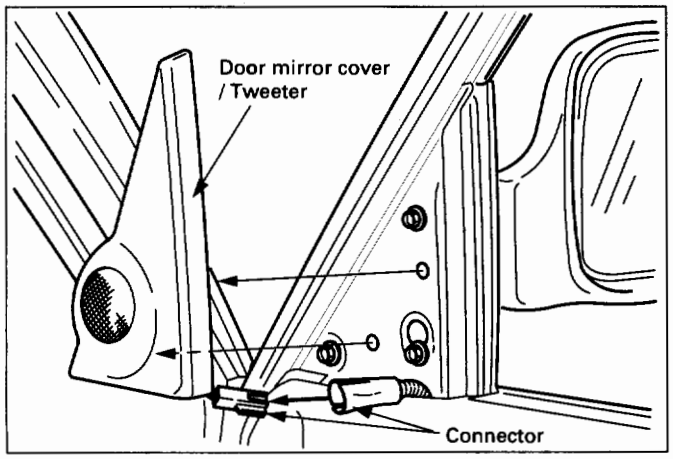

Fig. 10-33

2a. Regulator handle

- Pull the hook out and remove the regulartor handle (Fig. 10-34)

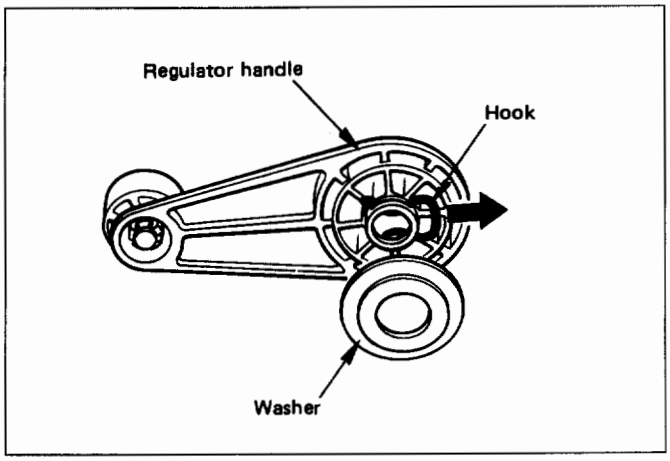

Fig. 10-34

2b. Power window switch

- Pry the power window switch out and disconnect switch connector. (Fig. 10-35)

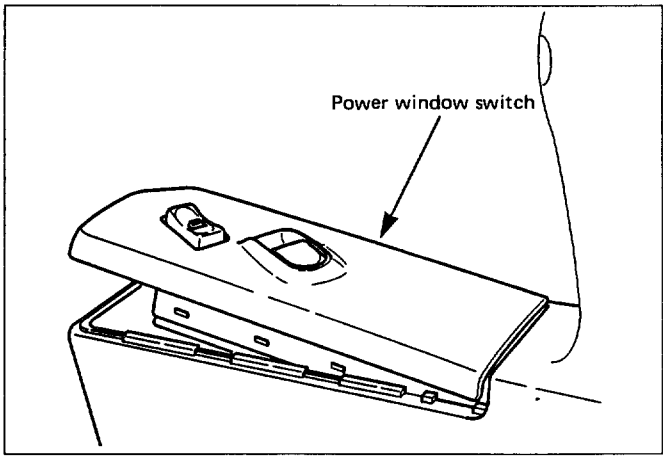

Fig. 10-35

3. **Speaker cover**
4. **Front speaker**
   - Remove front speaker fixing screws and disconnect speaker connector.
5. **Inside handle fixing screw**
   - Remove the screw that fixes the inside handle, slide the inside handle to the position illustrated, and leave it there for the moment.

   CAUTION:
   Be careful not to impose excessive force on the inside handle link, lest this link be elongated, which could make it impossible to operate the door with the inside handle.

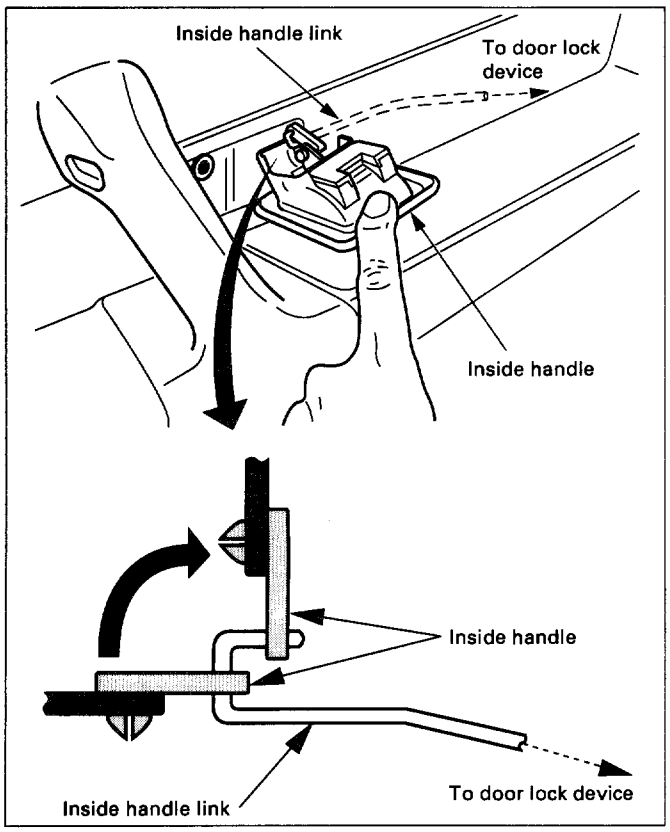

Fig. 10-36

6. **Door trim panel**
   - Remove the 2 fixing screws to take off the 7 clips form the door panel. (Fig.10-37)

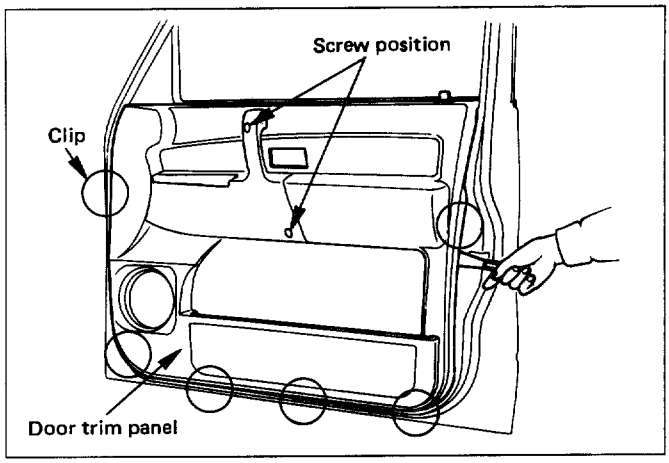

Fig. 10-37

   - Disconnect the courtesy lamp connector to lift the trim panel and unlock the engagement of the waist seal section. Then, pass the inside lever through the mounting hole of the trim panel, and detach the trim panel. (Fig. 10-38)

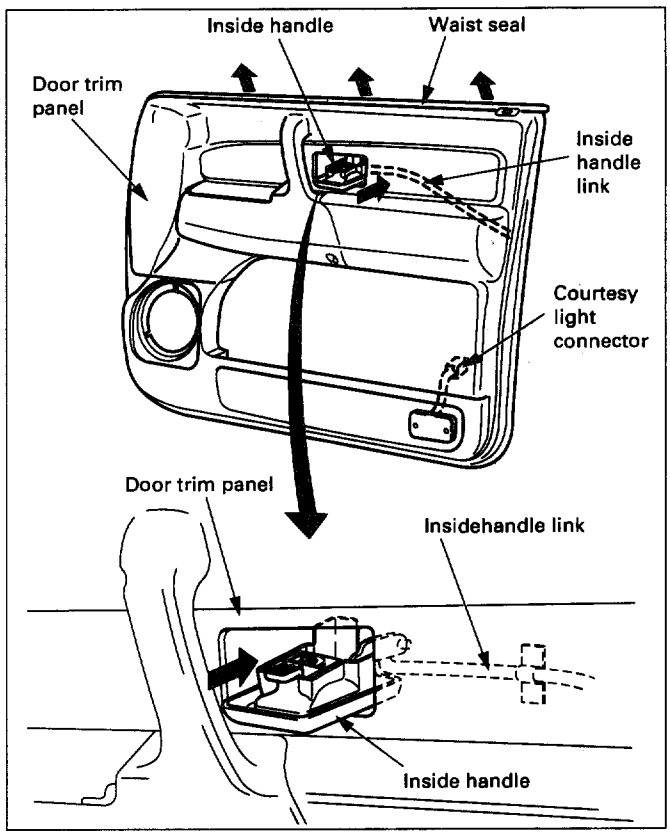

Fig. 10-38

7. **Inside handle**
8. **Door wood panel**
   - Refer to "DOOR WOOD PANEL" removal procedure in this section.

INSTALLATION

To install, follow the removal steps in the reverse order, noting the following point.

1. When installing the inside handle, assemble it only provisionally to the inside handle link. (Fig. 10-39)

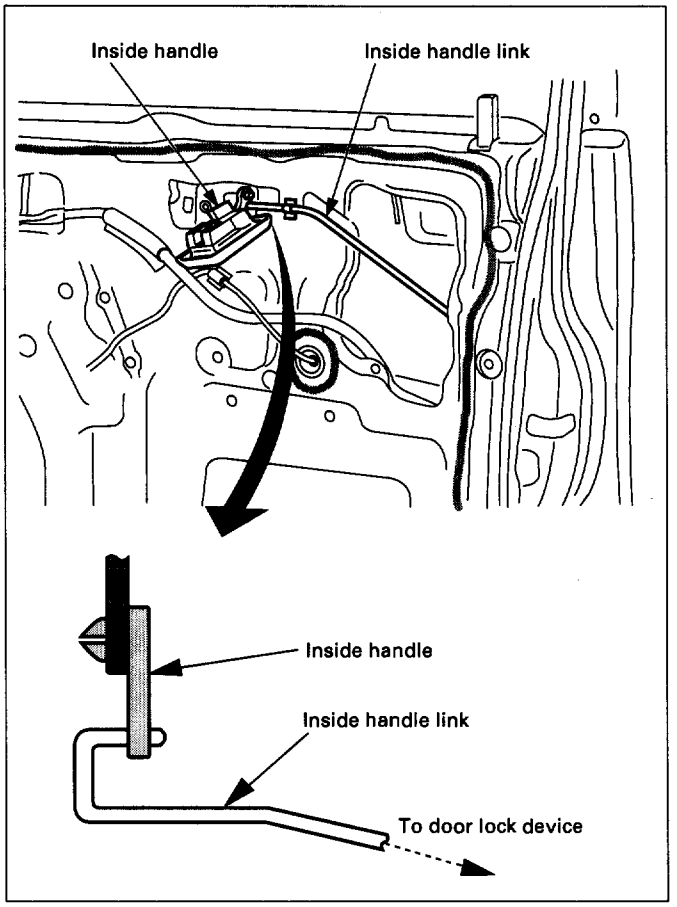

Fig. 10-39

2. Pass the inside handle through the mounting hole of the trim panel and assemble the trim panel. Engage securely the 7 clips into the door panel. Also, connect the courtesy lamp connector and leave the connectors of the speaker, tweeter and power window drawn out to their prescribed positions, so that they will not be caught. Then, put back the inside handle to the normal position of the link. (Fig. 10-40)

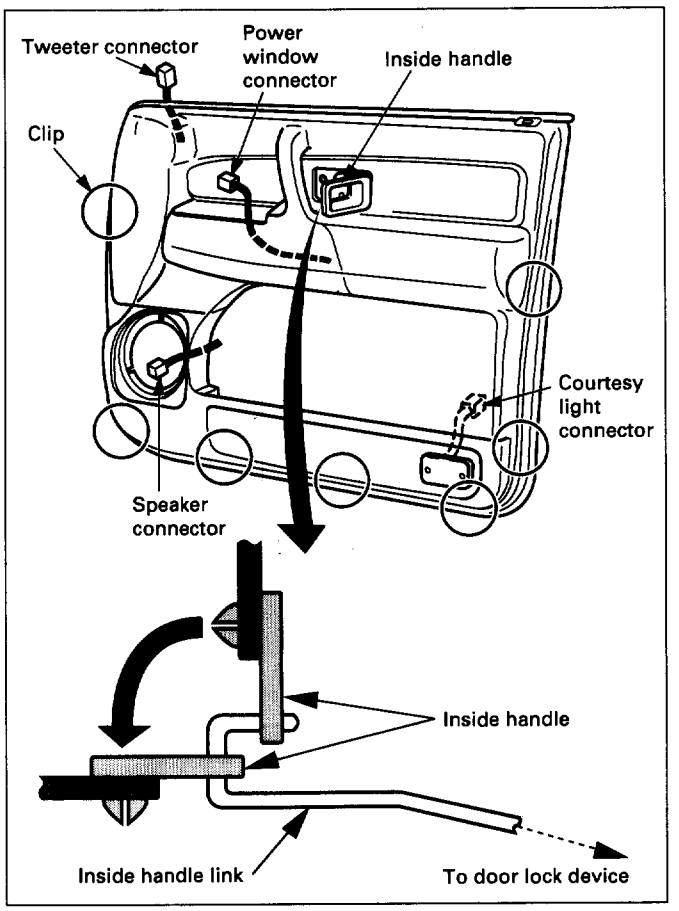

Fig. 10-40

3. Fit the claw of the inside handle securely into the hole of the door panel and fix the inside handle with the screw. (Fig. 10-41)

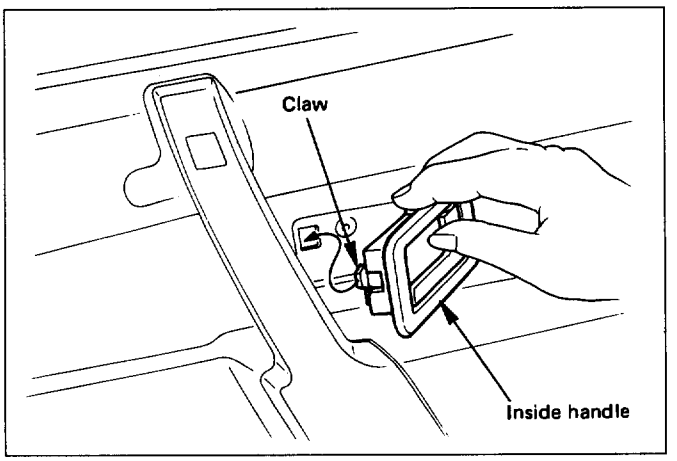

Fig. 10-41

REAR DOOR TRIM PANEL

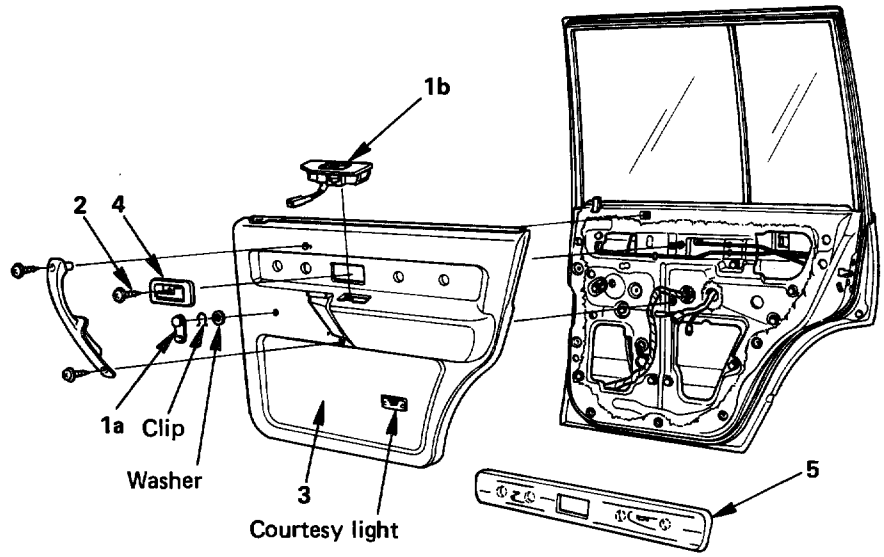

Removal steps
1a. Regulator handle
1b. Power window switch
2. Inside handle fixing screw
3. Door trim panel
4. Inside handle
5. Door wood panel

Installation steps
To install,follow the removal steps in the reverse order.

Fig. 10-42

REMOVAL

Preparation: Disconnect the battery ground cable

1a. Regulator handle
- Pull the hook out and remove the regulator handle (Fig. 10-34).

1b. Power window switch
- Pry the power window switch out and disconnect switch connector. (Fig. 10-43).

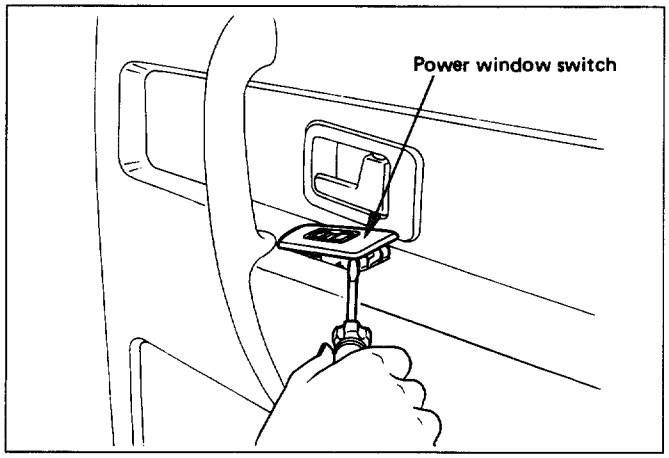

Fig. 10-43

2. Inside handle fixing screw
- Remove the screw that fixes the inside handle, slide the inside handle to the position illustrated, and leave it there for the moment.

Caution:
Be careful not to impose excessive force on the inside handle link, lest this link be elongated, which could make it impossible to operate the door with the inside handle.

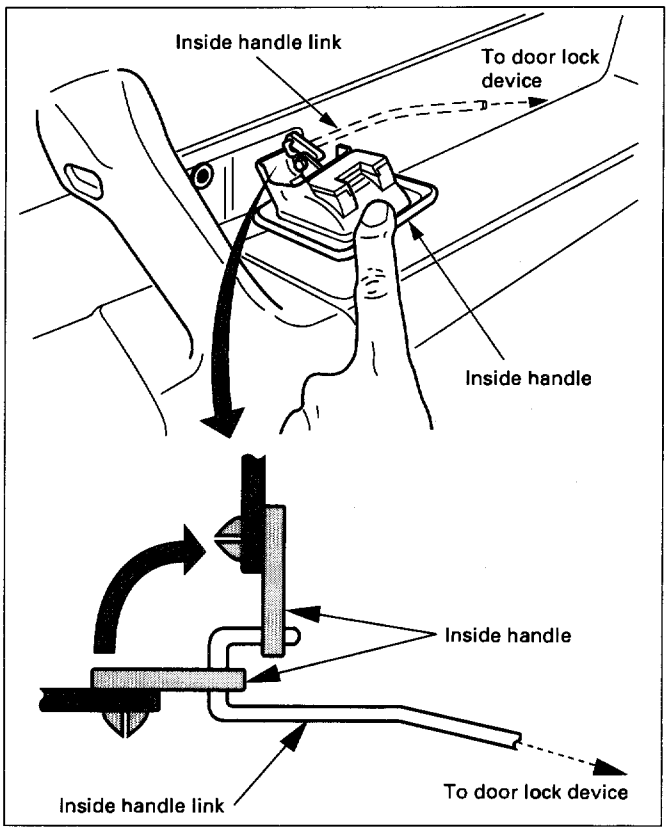

Fig. 10-44

3. **Door trim panel**
   - Remove the 2 fixing screws to take off the 7 clips from the door panel. (Fig.10-45)

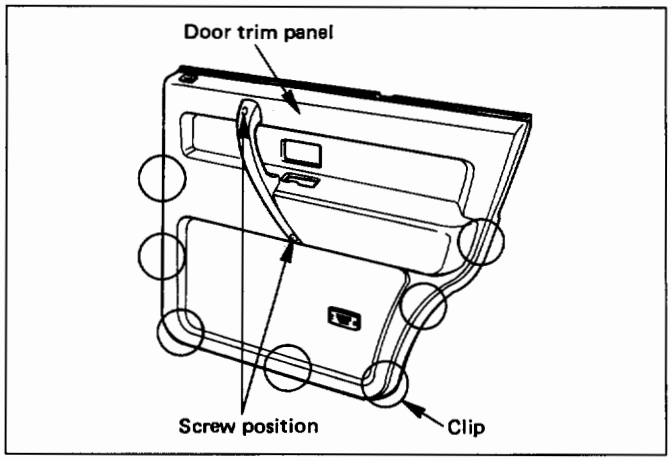

Fig. 10-45

   - Unplug the courtesy lamp connector to lift the trim panel and unlock the engagement of the waist seal section. Then, pass the inside lever through the mounting hole of the trim panel, and detach the trim panel.
4. **Inside handle**
5. **Door wood panel**
   - Refer to "DOOR WOOD PANEL" removal procedure in this section.

INSTALLATION

To install, follow the removal steps in the reverse order, noting the following point.

1. When installing the inside handle, assemble it only provisionally to the inside handle link. (Fig. 10-46)

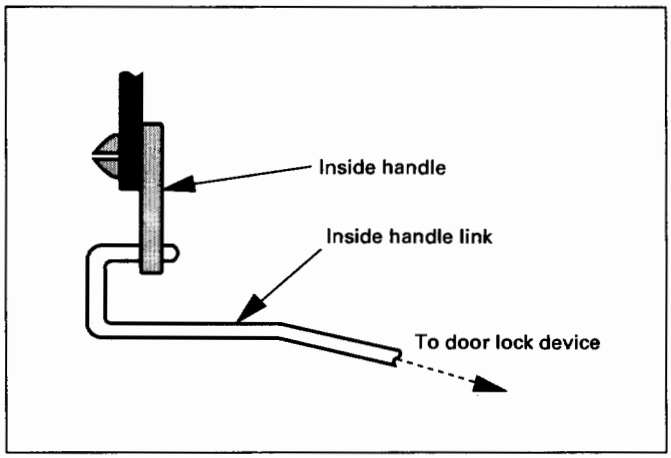

Fig. 10-46

2. Pass the inside handle through the mounting hole of the trim panel and assemble the trim panel. Engage securely the 7 clips into the door panel. Also, connect the courtesy lamp connector and leave the connector of the power window drawn out to its prescribed position, so that it will not be caught.
3. Put back the inside handle to the original position of the ink. Fit the claw of the inside handle securely into the hole of the door panel and fix the handle with the screw. (Fig. 10-47)

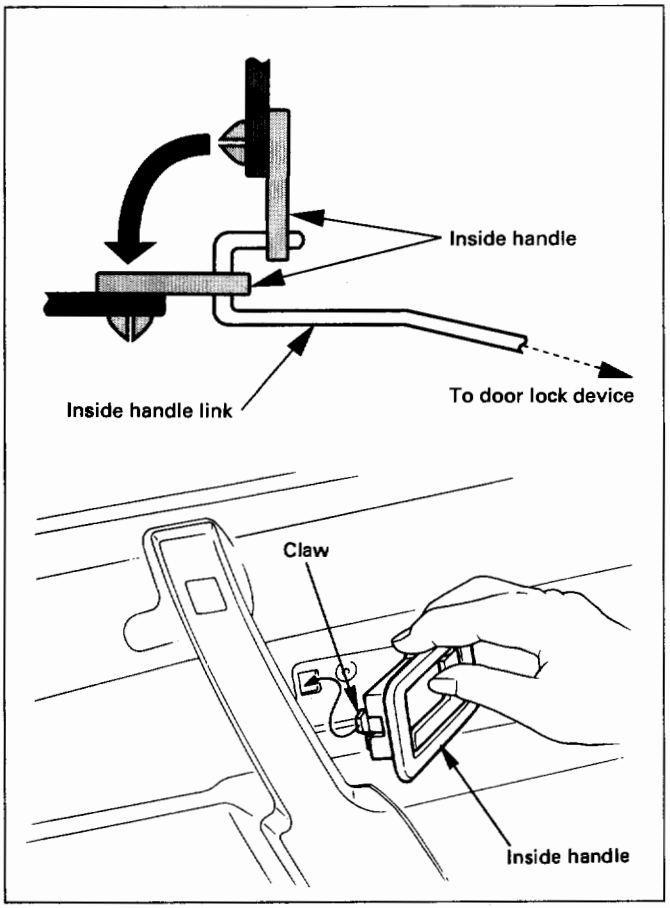

Fig. 10-47

DOOR WOOD PANEL ASSEMBLY

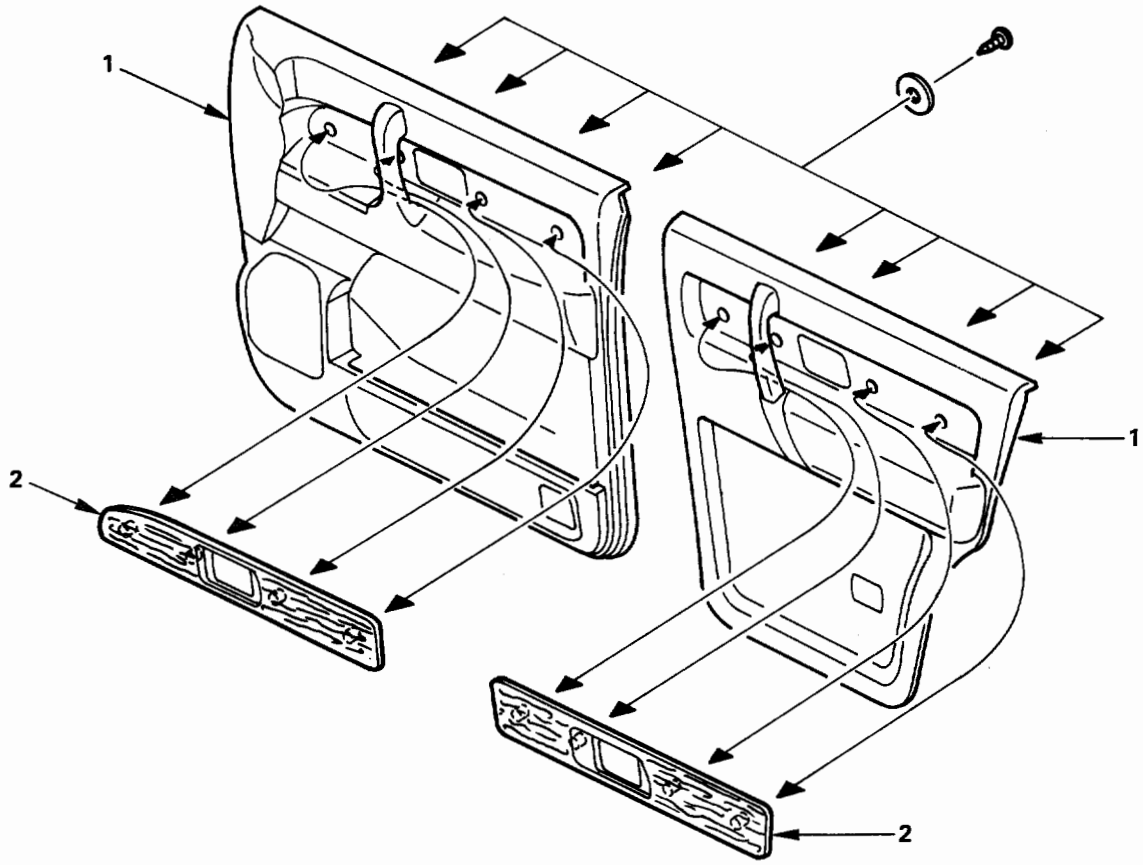

Removal steps
1. Door trim panel
2. Door wood panel assembly

Installation steps
To install,follow the removal steps in the reverse order.

Fig. 10-48

REMOVAL

1. **Door trim panel**
   - Refer to "DOOR TRIM PANEL" removal procedure in this section.
2. **Door wood panel assembly (Fig.10-49)**
   - Remove 4 fixing screws and washers.

Note:
- The removal and installation steps are common to both front and rear doors.

INSTALLATION

To install, follow the removal steps in the reverse order.

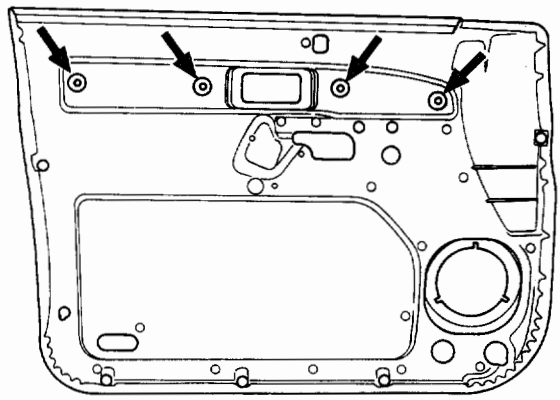

Fig. 10-49

FRONT WINDOW REGULATOR, GLASS AND AND GLASS RUN

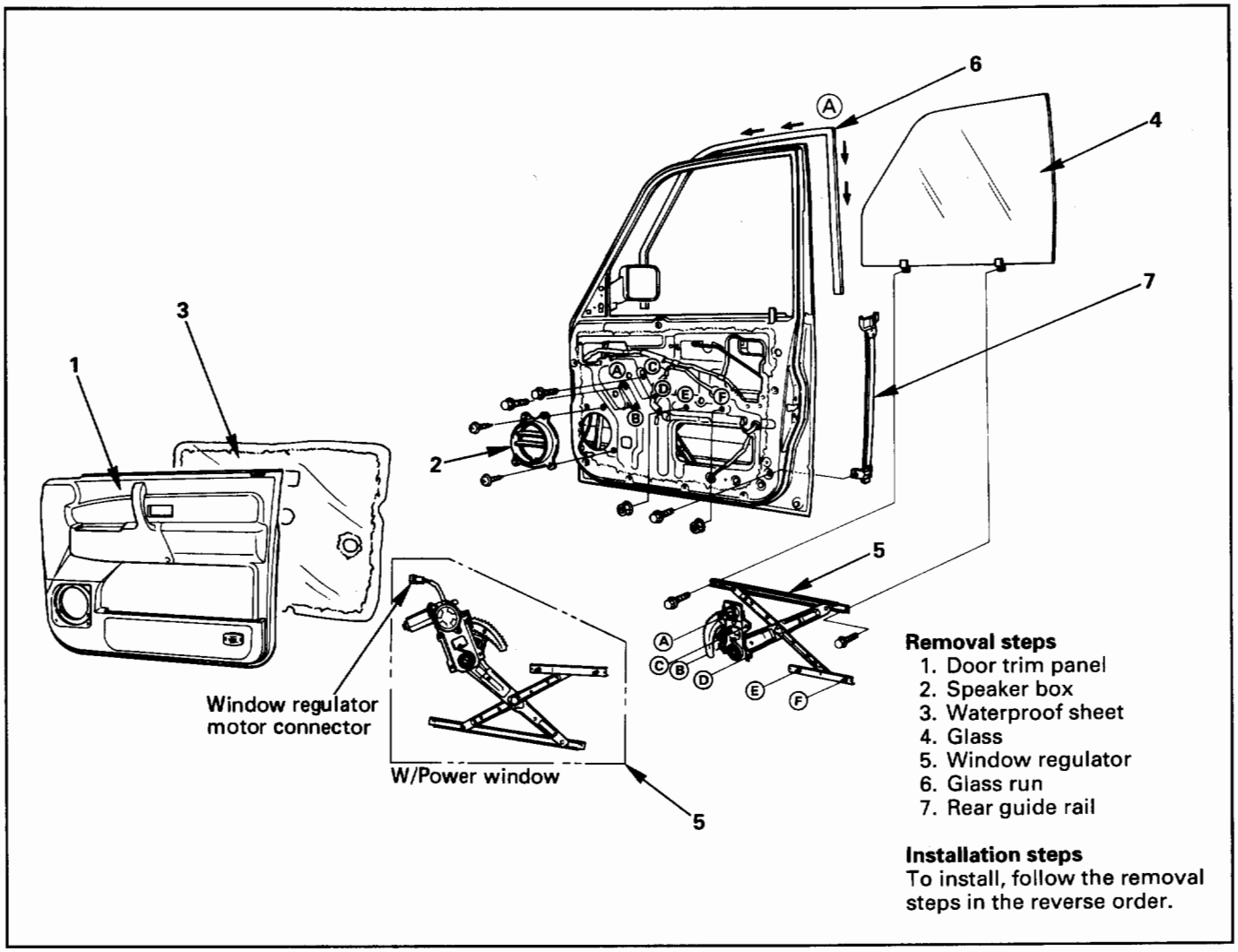

Fig. 10-50

REMOVAL

Preparation: Disconnect the battery ground cable

1. **Door trim panel**
   - Refer to "DOOR TRIM PANEL" removal procedure in this section.
2. **Speaker box**
3. **Waterproof sheet (Fig. 10-51)**
   - Taking notice of the door harness and the grommet, peel the waterproof sheet off the door panel carefully.
4. **Glass**
   - Bring the glass down to the position where the fixing bolts can be seen. (Fig. 10-52)
   - Remove the glass fixing bolts from the window regulator and lower the front side of the glass.
     When the front side of the glass comes off the glass run, turn the glass inside out and pull it up from its rear side. (Fig. 10-53)

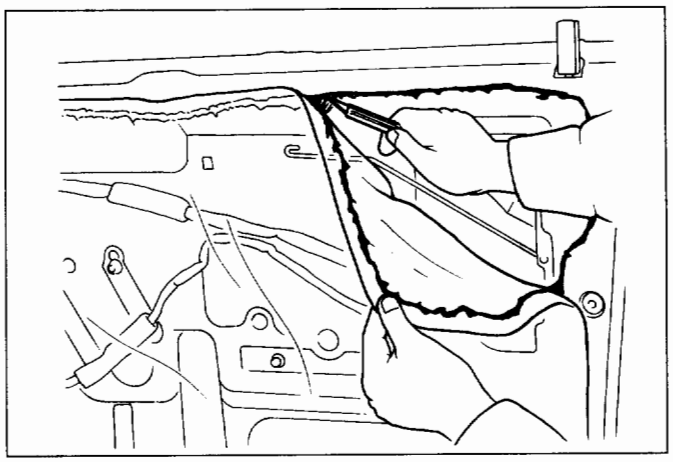

Fig. 10-51

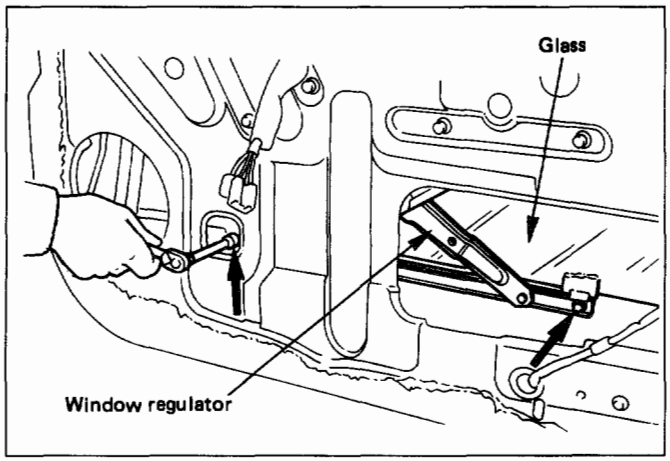

Fig. 10-52

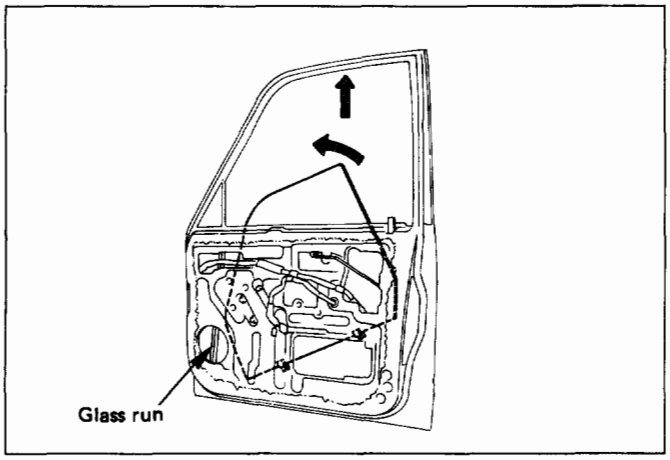

Fig. 10-53

5. **Window regulator (Fig. 10-54)**
   - Disconnect the window regulator motor harness connector (W/Power window).

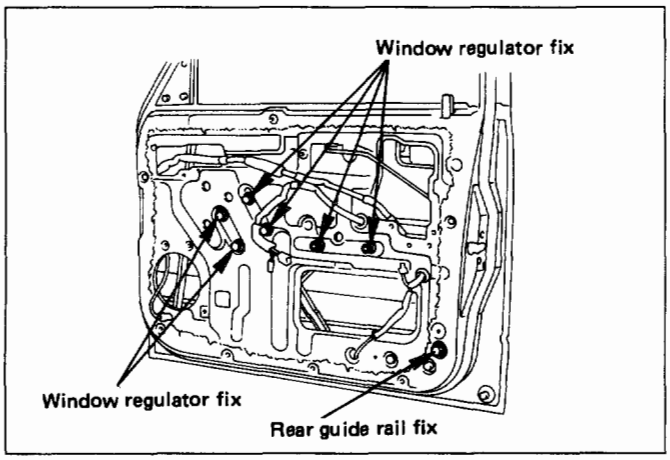

Fig. 10-54

6. **Glass run**
   - Pull the glass run out from the door frame groove. (Fig. 10-55)
7. **Rear guide rail**

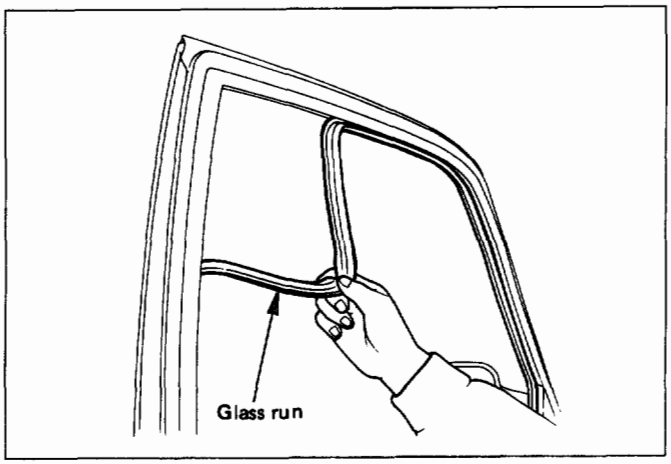

Fig. 10-55

INSTALLATION

To install, follow the removal steps in the reverse order, noting the following points.

1. Apply soap and water to the door frame groove and insert the glass run to the door frame from the Ⓐ corner in the arrow-marked directions. (Fig. 10- 50)
   Install the glass run with its wider end pointed to the inside of the vehicle. (Fig. 10-56)

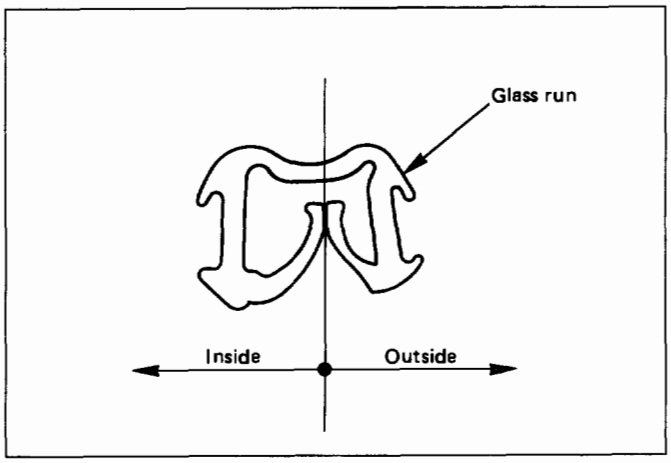

Fig. 10-56

2. Set the glass into the door panel with the front side of the glass lowered and insert the rear side of the glass into the glass run. Then insert the front side of the glass into the glass run to install the glass to the glass run while raising it up along the glass run.
3. Tighten the window regulator and glass fixing bolts and nuts to the specified torque.

Torque	N·m (lb·in)	8 (69)

4. Check to see if the window regulator operates smoothly and the glass opens and closes properly. Install the waterproof sheet with no clearance between the door panel and the waterproof sheet.

REAR WINDOW REGULATOR AND GLASS

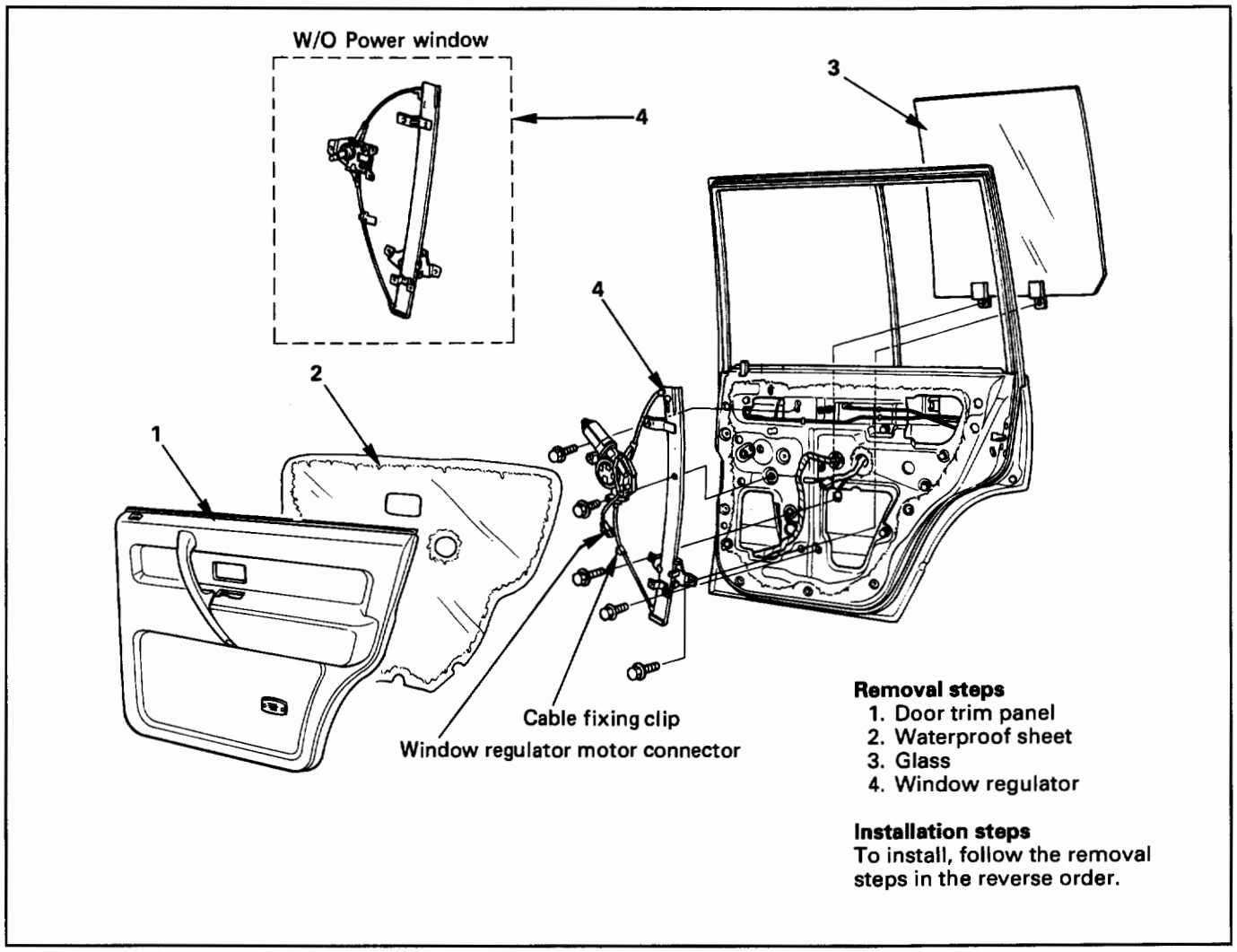

Fig. 10-57

REMOVAL

Preparation: Disconnect the battery ground cable

1. **Door trim panel**
   - Refer to "DOOR TRIM PANEL (REAR)" removal procedure in this section.
2. **Waterproof sheet (Fig. 10-58)**
   - Taking notice of the door harness, peel the waterproof sheet off the door panel carefully.
3. **Glass**
   - Bring the glass down to the position where the bolt can be seen. (Fig. 10-59)
   - Remove the sash division fixing bolts (2 pcs.), and then remove the glass fixing bolt to remove the glass upwards. (Fig. 10-60)

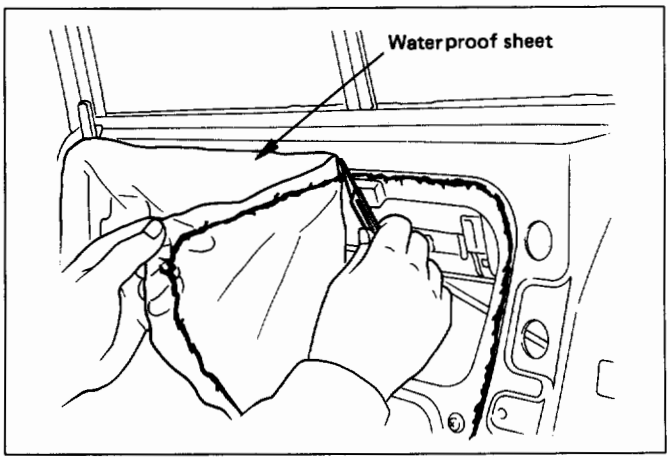

Fig. 10-58

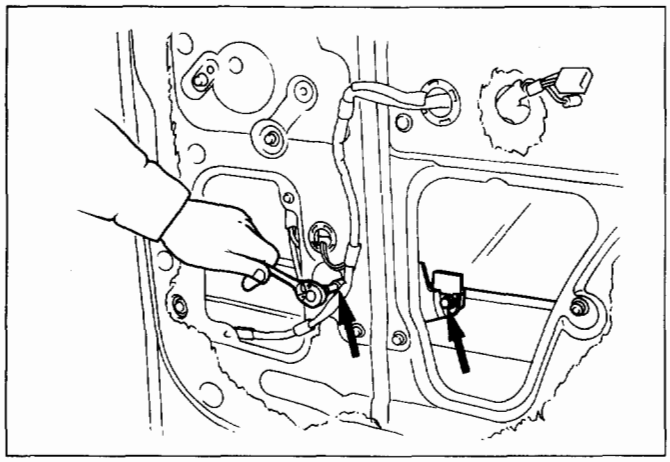

Fig. 10-59

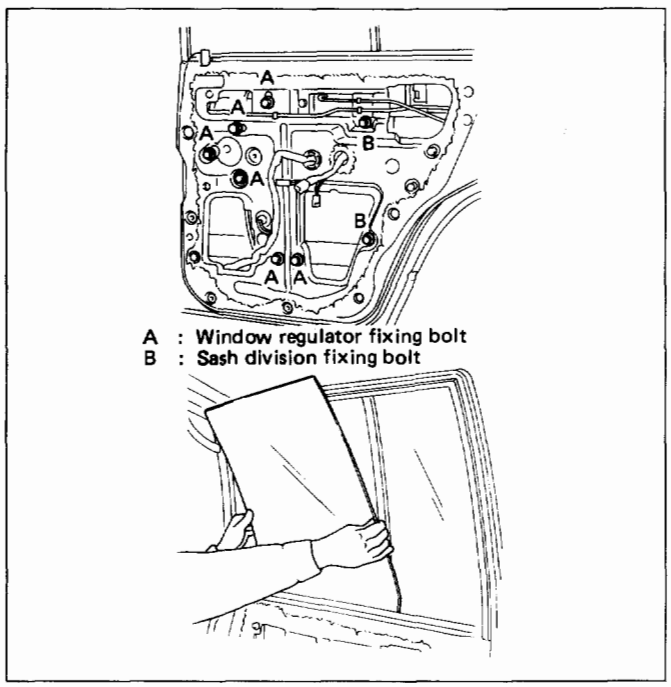

Fig. 10-60

4. **Window regulator (Fig. 10-61)**
   - Disconnect the regulator motor connector and remove the window regulator cable fixing clip from door panel (W/Power window).
   - Remove window regulator fixing bolts and pull the regulator out from the lower hole of door panel.

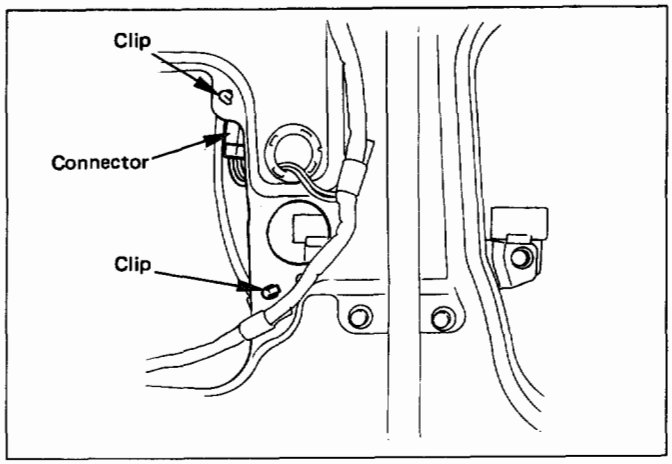

Fig. 10-61

INSTALLATION

To install, follow the removal steps in the reverse order, noting the following points.

1. Tighten the window regulator and glass fixing bolts to the specified torque.

Torque	N·m (lb·ft)	8 (69)

2. Install the waterproof sheet with no clearance between the door panel and the waterproof sheet.

FRONT DOOR LOCK ASSEMBLY

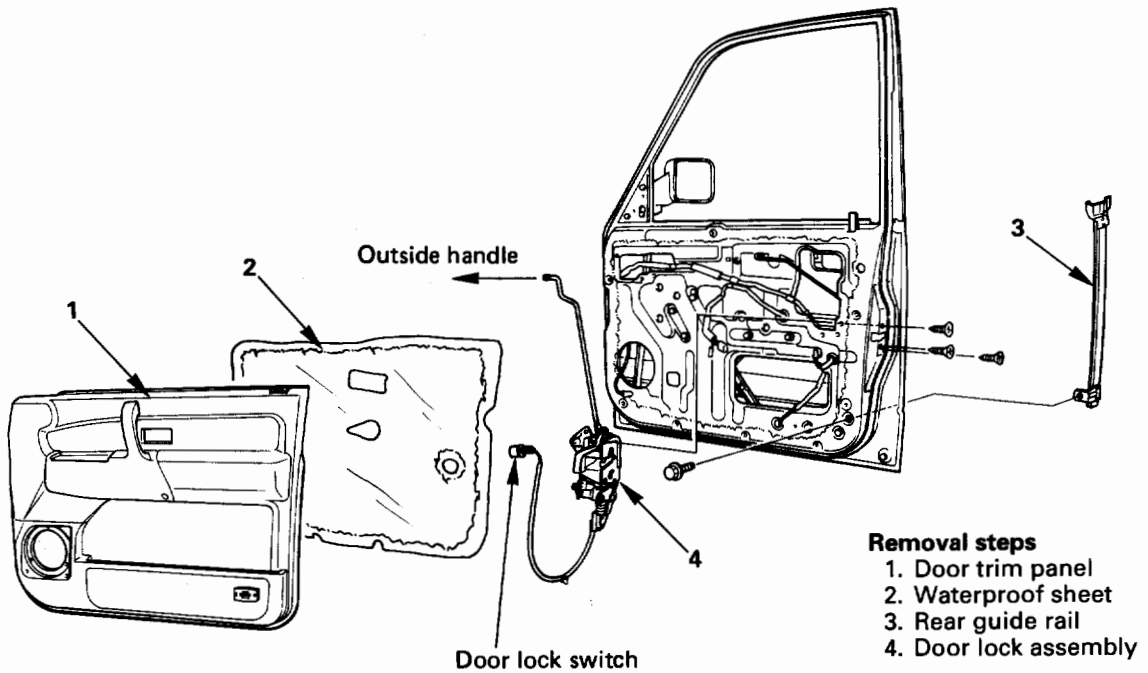

Removal steps
1. Door trim panel
2. Waterproof sheet
3. Rear guide rail
4. Door lock assembly

Installation steps
To install, follow the removal steps in the reverse order.

Fig. 10-62

REMOVAL

Preparation: Disconnect the battery ground cable

1. **Door trim panel**
2. **Waterproof sheet**
   - Refer to "WINDOW REGULATOR" removal procedure in this section.
3. **Rear guide rail**
   - Raise the glass up to the uppermost position.
4. **Door lock assembly (Fig. 10-63)**
   - Disconnect door lock switch connector (W/ Power door lock) and locking links (Arrow marks positions).
   - Remove door lock assembly fixing screws.

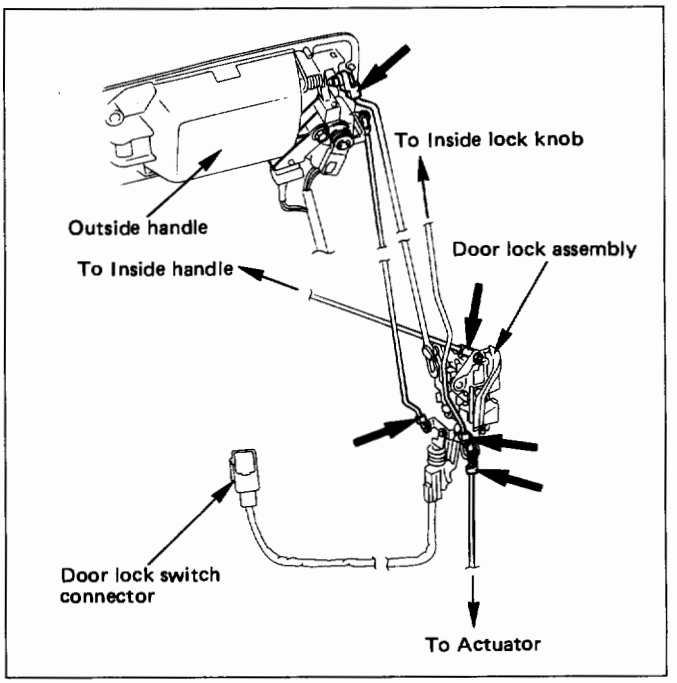

Fig. 10-63

INSTALLATION

To install, follow the removal steps in the reverse order, noting the following points.

1. Apply chassis grease to the lock assembly and striker moving surface.
2. Tighten the door lock assembly fixing screws to the specified torque.

Torque	N·m (lb·in)	7 (61)

3. Check that the door lock operates smoothly.

REAR DOOR LOCK ASSEMBLY

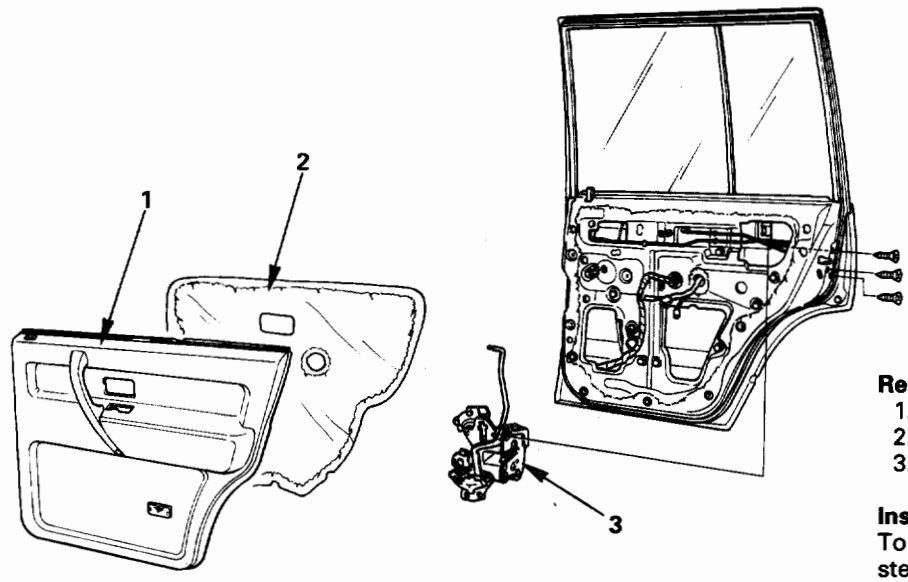

Removal steps
1. Door trim panel
2. Waterproof sheet
3. Door lock assembly

Installation steps
To install, follow the removal steps in the reverse order.

Fig. 10-64

REMOVAL

Preparation: Disconnect the battery ground cable

1. **Door trim panel**
2. **Waterproof sheet**
   - Refer to "WINDOW REGULATOR" removal procedure in this section.
3. **Door lock assembly (Fig. 10-65)**
   - Disconnect the locking links (Arrow marks positions) and remove the door lock assembly fixing screws.

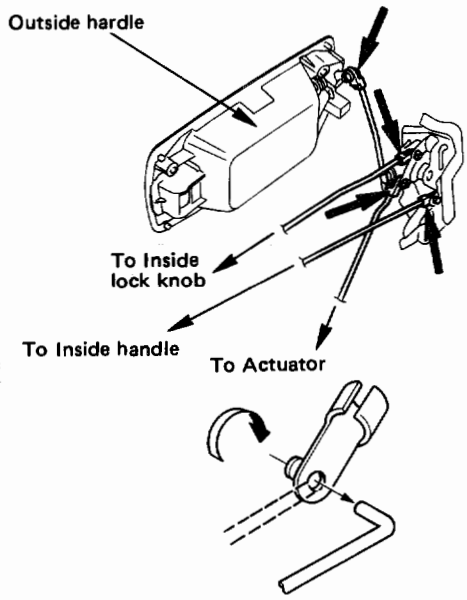

Fig. 10-65

INSTALLATION

To install, follow the removal steps in the reverse order, noting the following points.

1. Apply chassis grease to the lock assembly and striker moving surface.
2. Tighten the door lock assembly fixing screws to the specified torque.

Torque	N·m (lb·in)	7 (61)

3. Check that the door lock operates smoothly.

FRONT OUTSIDE HANDLE AND DOOR LOCK CYLINDER

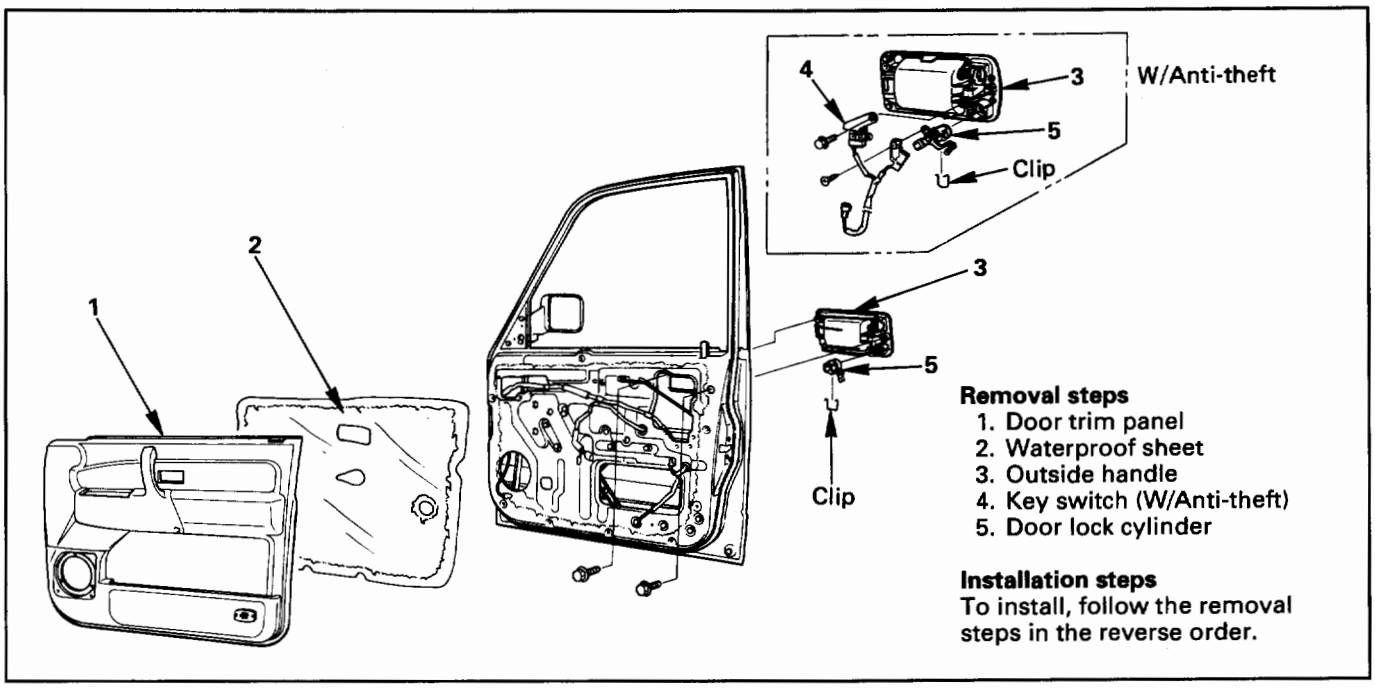

Fig. 10-66

REMOVAL

Preparation: Disconnect the battery ground cable

1. **Door trim panel**
2. **Waterproof sheet**
   - Refer to "WINDOW REGULATOR" removal procedure in this section.
3. **Outside handle**
   - Disconnect the locking links (Arrow marks positions) and key switch connector (W/Anti-theft) (Fig. 10-67).
4. **Key switch (W/Anti-theft) (Fig. 10-68)**
5. **Door lock cylinder**
   - Remove the cylinder fixing clip. (Fig. 10-69)

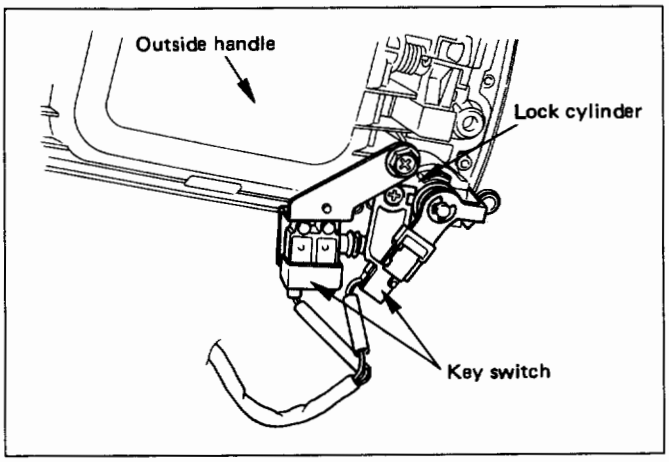

Fig. 10-68

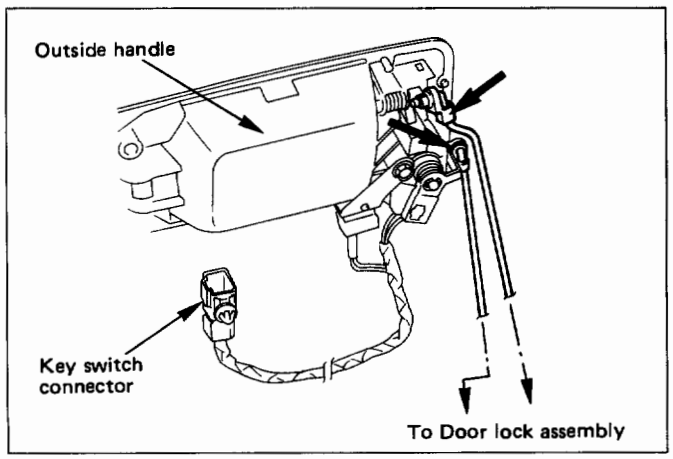

Fig. 10-67

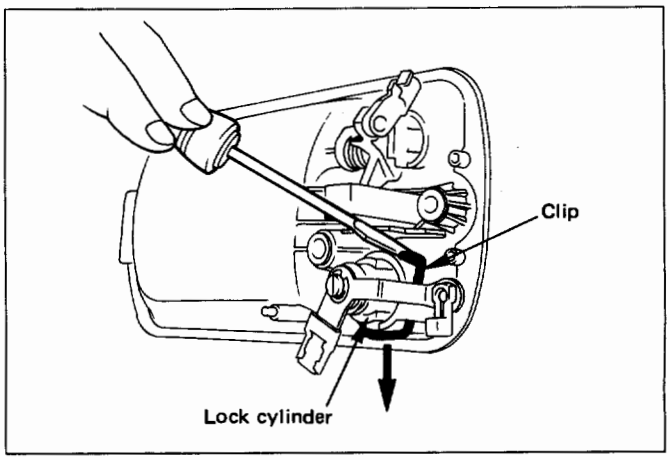

Fig. 10-69

INSTALLATION

To install, follow the removal steps in the reverse order, noting the following points.

1. Be sure to install the door lock cylinder at a right angle to the outside handle. (Fig. 10-70)

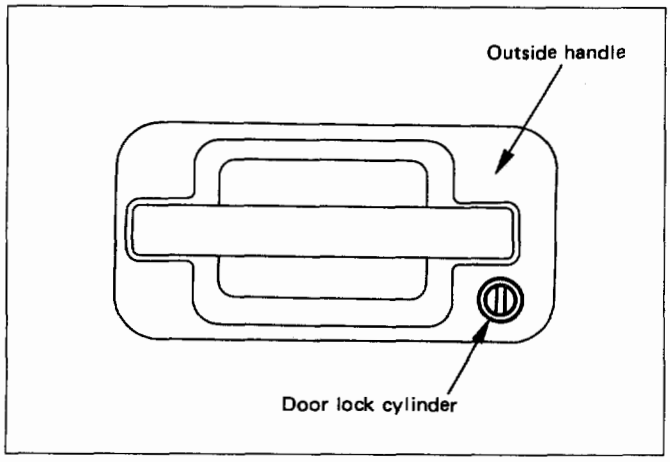

Fig. 10-70

2. For the anti-theft system, be sure to install the push rod of key switch while pressing it to the lock cylinder so that there is no continuity between the key switch side connector terminal No. D6-2 and D6-4 (No. D16-2 and D16-4: passenger side). (Fig. 10-71)

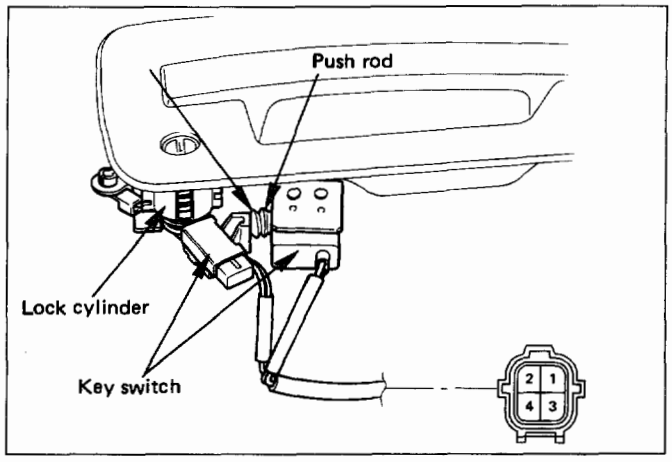

Fig. 10-71

3. Tighten the outside handle and key switch fixing bolts to the specified torque.

Torque	N·m (lb·in)	9 (78)

4. Check for smooth outside handle and lock cylinder operation.

REAR OUTSIDE HANDLE

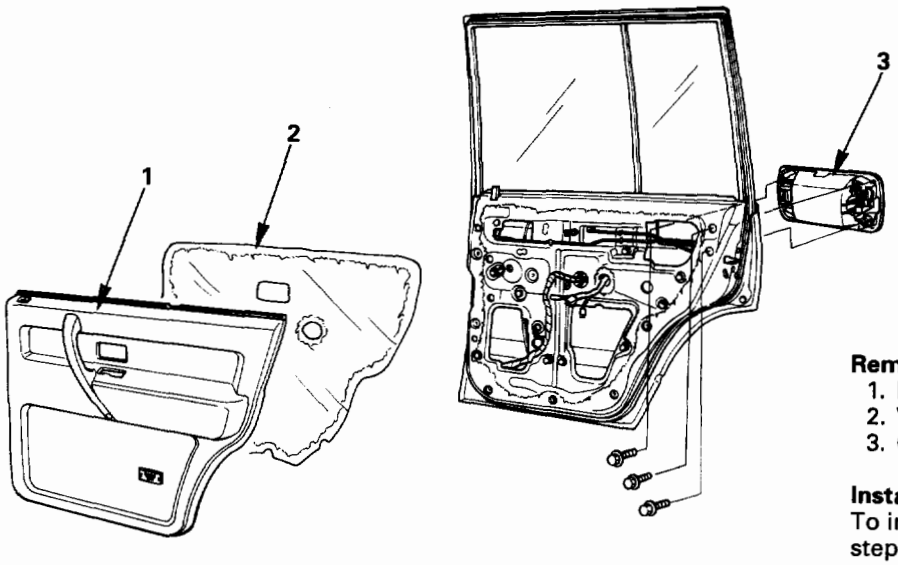

Removal steps
1. Door trim panel
2. Waterproof sheet
3. Outside handle

Installation steps
To install, follow the removal steps in the reverse order.

Fig. 10-72

REMOVAL

Preparation: Disconnect the battery ground cable

1. **Door trim panel**
2. **Waterproof sheet**
   - Refer to "WINDOW REGULATOR" removal procedure in this section.
3. **Outside handle (Fig. 10-73)**
   - Disconnect the locking link (Arrow mark position) and remove the 3 fixing bolts.

INSTALLATION

To install, follow the removal steps in the reverse order, noting the following points.

1. Tighten the outside handle fixing bolts to the specified torque.

Torque	N·m (lb·in)	9 (78)

2. Check that the outside handle operates smoothly.

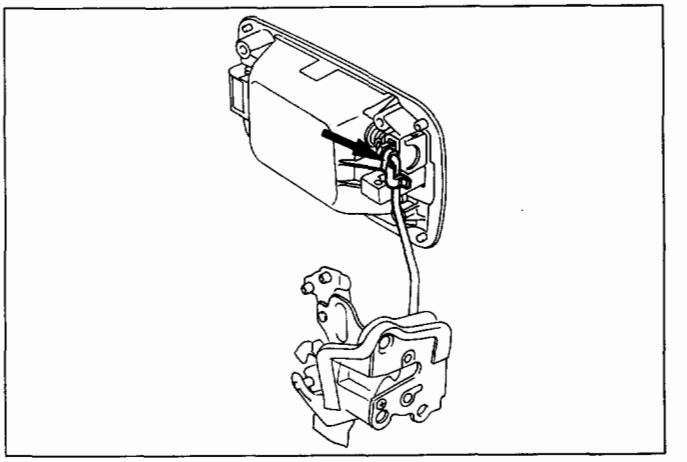

Fig. 10-73

REAR DOOR FIXED GLASS AND GLASS RUN

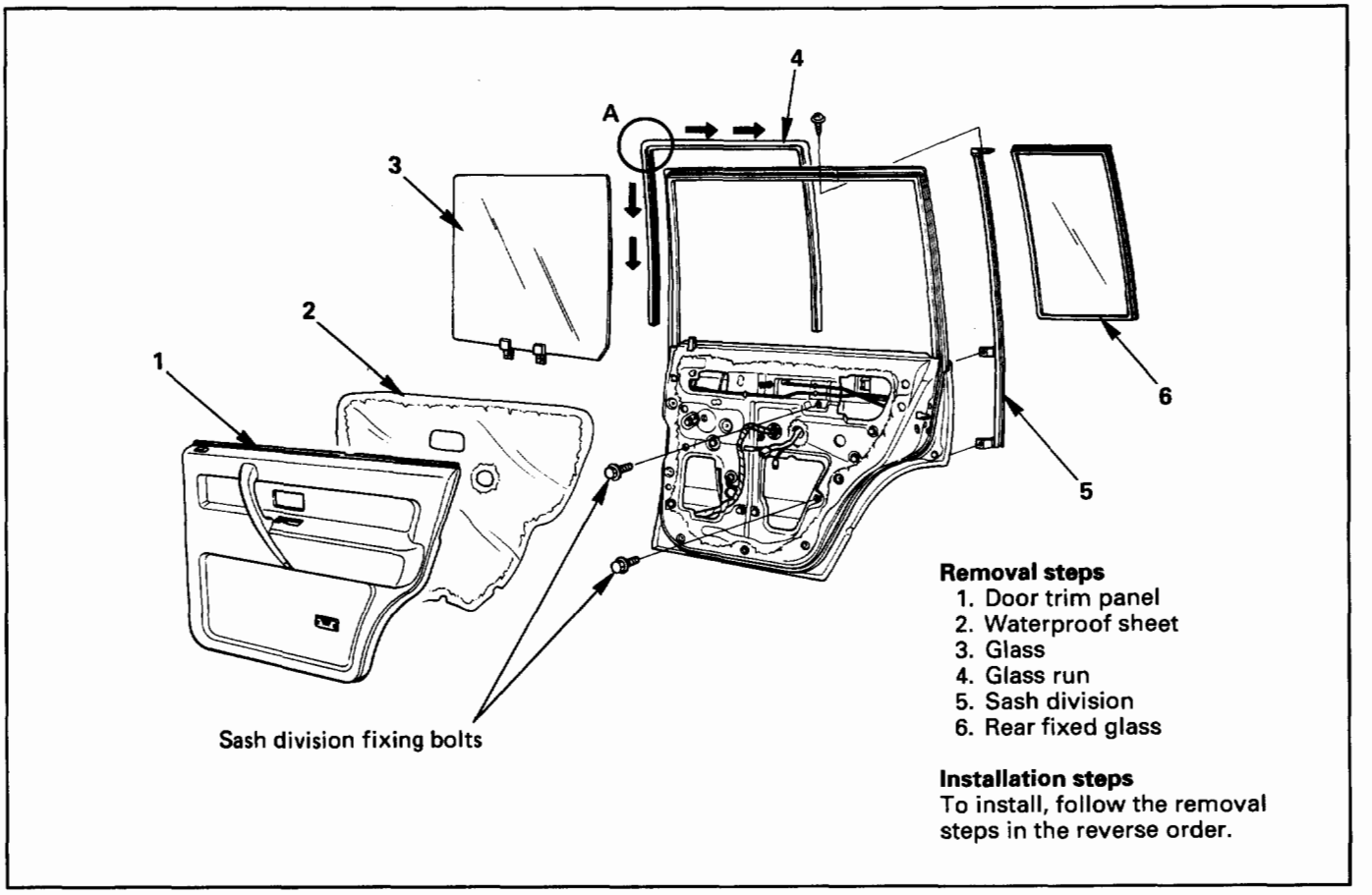

Fig. 10-74

REMOVAL

Preparation: Disconnect the battery ground cable

1. **Door trim panel**
2. **Waterproof sheet**
3. **Glass**
   - Refer to "WINDOW REGULATOR AND GLASS" removal procedure in this section.
4. **Glass run (Fig. 10-75)**
   - Pull the glass run out from door frame.

5. **Sash division (Fig. 10-60, 76)**
6. **Door fixed glass**

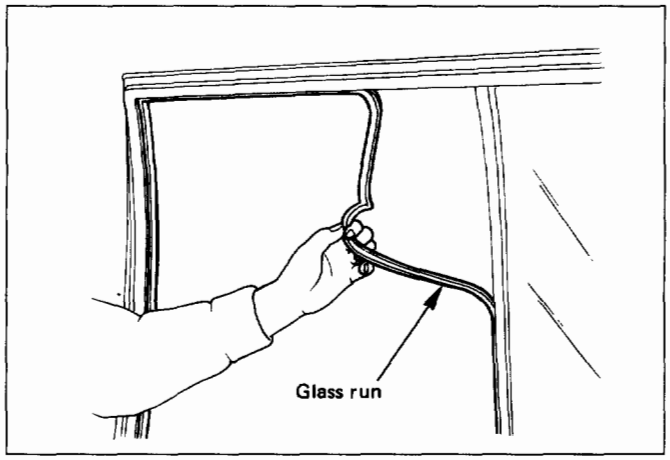

Fig. 10-75

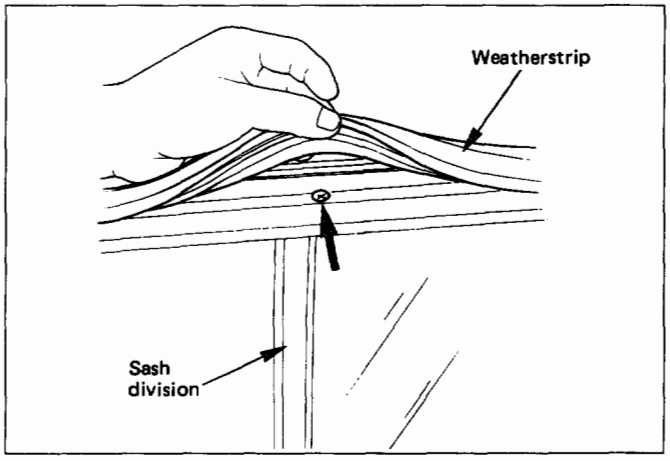

Fig. 10-76

INSTALLATION

To install, follow the removal steps in the reverse order, noting the following points.

1. Apply soap and water to the fixed glass.
2. Apply soap and water to the door frame groove and insert the glass run to the door frame from the Ⓐ corner in the arrow-marked directions. (Fig. 10- 74)
3. Be sure to install the glass run with its wider end pointed to the inside of the vehicle. (Fig. 10-56)

DOOR INSIDE LOCK KNOB

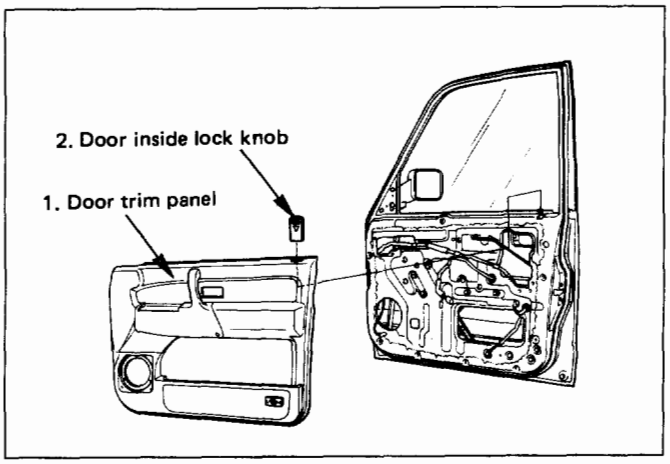

Fig. 10-77

REMOVAL

Preparation: Disconnect the battery ground cable

1. **Door trim panel**
   - Refer to "DOOR TRIM PANEL" removal procedure in this section.
2. **Door inside lock knob**
   - Turn the door inside lock knob counter-clockwise.

INSTALLATION

To install, follow the removal steps in the reverse order.

DOOR INSIDE HANDLE

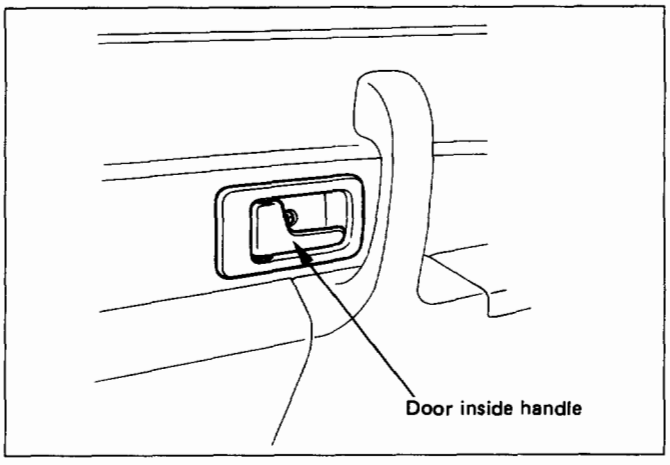

Fig. 10-78

REMOVAL AND INSTALLATION

Refer to "DOOR TRIM PANEL" in this section.

REAR DOOR INSIDE LOCK KNOB LINK

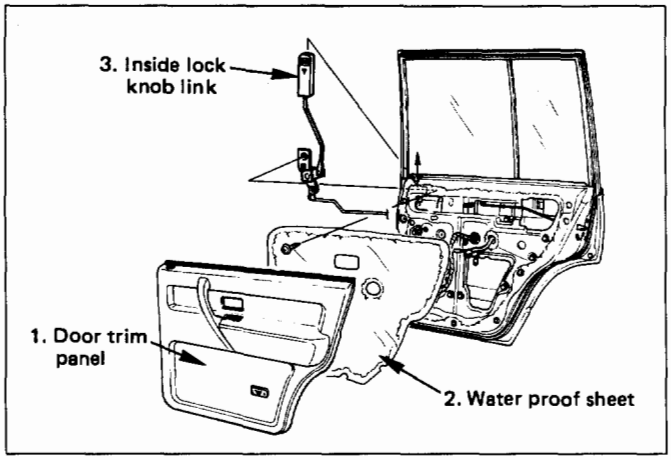

Fig. 10-79

REMOVAL

Preparation: Disconnect the battery ground cable

1. **Door trim panel**
2. **Waterproof sheet**
3. **Rear door inside lock knob link**
   - Remove the fixing screw and disconnect the locking link at the door lock assembly. (Fig. 10- 80)

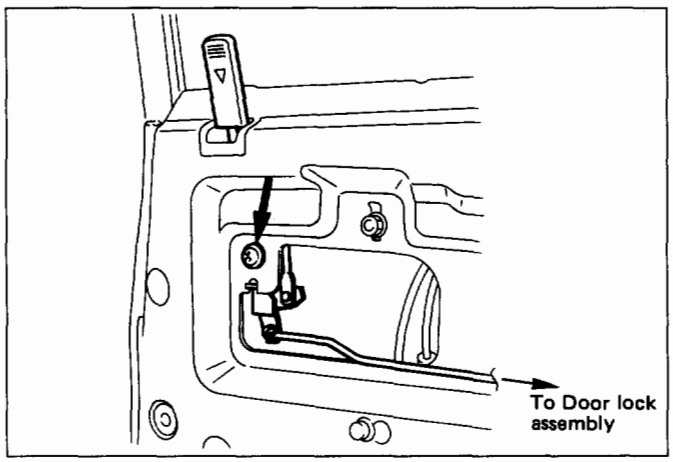

Fig. 10-80

INSTALLATION

To install, follow the removal steps in the reverse order.

FRONT DOOR SASH MOULDING

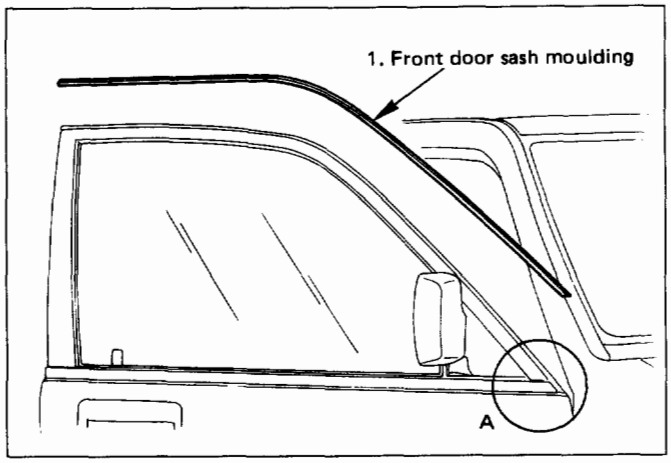

Fig. 10-81

REMOVAL

1. **Front door sash moulding (Fig. 10-82)**
   - To avoid the weatherstrip and pry the door sash moulding out from door panel.

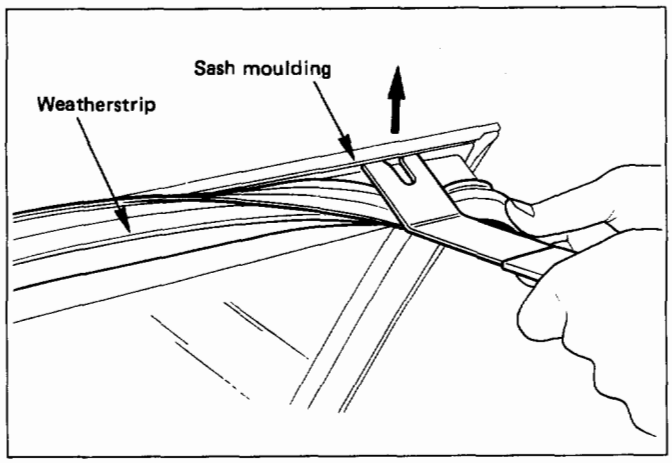

Fig. 10-82

INSTALLATION

1. **Front door sash moulding**
   - Assemble the edge portion (Ⓐ portion) of the moulding so that the clearance between the moulding and the waist seal becomes 1 mm (0.04 in).

REAR DOOR MOULDING

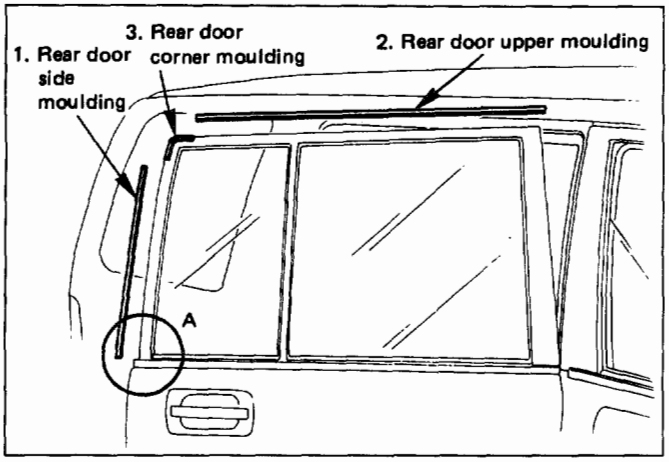

Fig. 10-83

REMOVAL

Preparation: Battery ground cable

1. **Rear door side moulding**
2. **Rear door upper moulding**
3. **Rear door corner moulding**
   - Avoiding the weatherstrip, pry the moulding out from door frame. (Fig. 10-84)

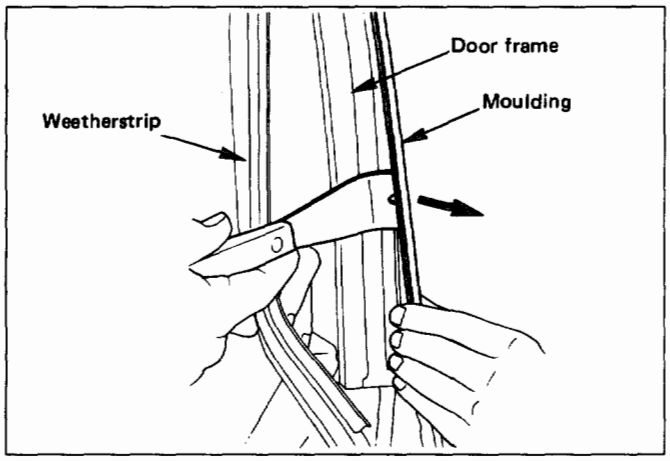

Fig. 10-84

INSTALLATION

To install, follow the removal steps in the reverse order, noting the following points.

1. Install each moulding with no clearance between each piece of moulding.
2. Assemble the edge portion (Ⓐ portion) of the moulding so that the clearance between the rear side moulding and the waist seal is 1 mm (0.04 in).

FRONT DOOR WAIST SEAL

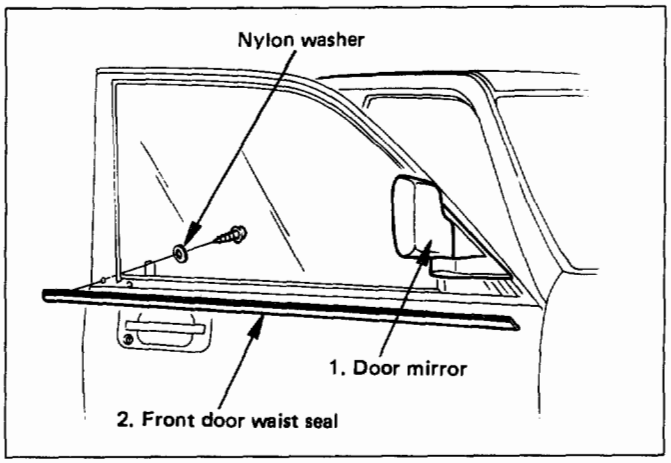

Fig. 10-85

REMOVAL

Preparation: Disconnect the battery ground cable

1. **Door mirror**
   - Refer to "DOOR MIRROR" in this section.
2. **Front door waist seal**
   - Remove the fixing screw and pull out the waist seal from the door frame while prying it up. (Fig. 10-86)

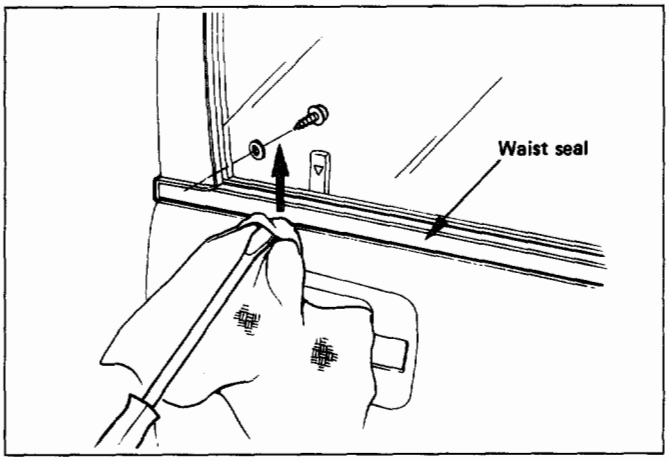

Fig. 10-86

INSTALLATION

2. **Front door waist seal**
   - Apply soap and water to the inside of the waist seal and align the screw hole of the waist seal to the door panel hole, and gently tap the seal with a rubber hammer.
     Be careful not to tap it hard. This may result in deforming the seal.
1. **Door mirror**

REAR DOOR WAIST SEAL

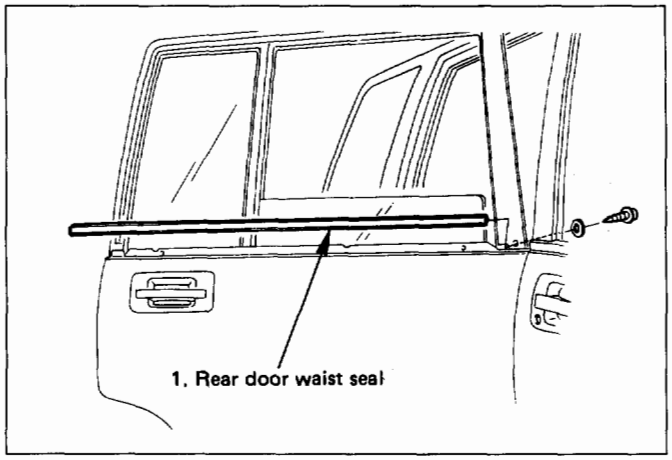

Fig. 10-87

REMOVAL AND INSTALLATION

Refer to "FRONT DOOR WAIST SEAL" in this section.

FRONT DOOR WEATHERSTRIP

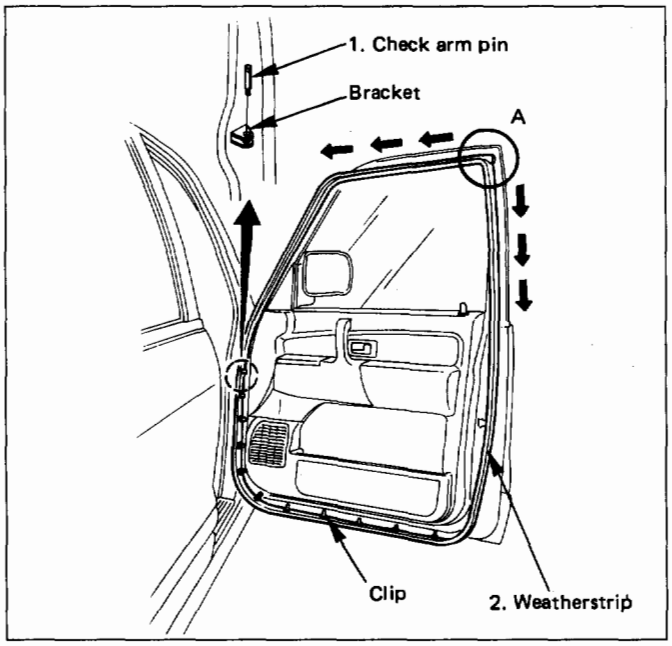

Fig. 10-88

REMOVAL

1. **Check arm pin**
2. **Front door weatherstrip**
   - Pull the weatherstrip out from door frame. (Fig. 10-89)
   - Be careful to remove weatherstrip from door panel. (Fig. 10-90)

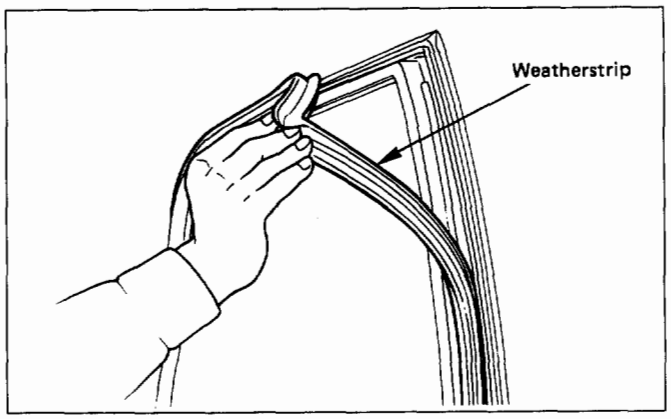

Fig. 10-89

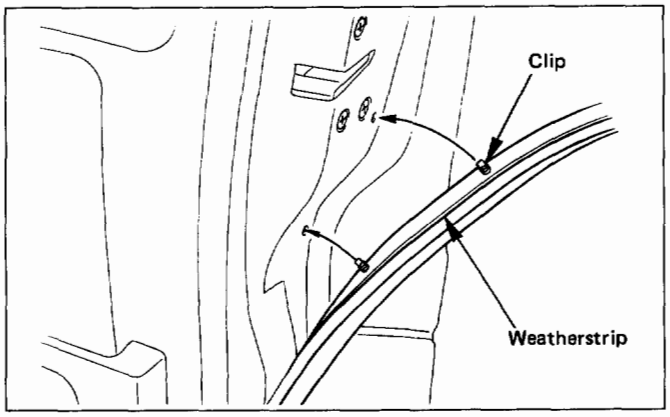

Fig. 10-90

INSTALLATION

1. **Front door weatherstrip**
   - Apply soapy water to the door frame groove.
   - Apply the sealing adhesive to the upper Ⓐ portion of the door frame and press it for installation after assembling the weatherstrip. (Fig. 10-91)
   - After positioning the weatherstrip corner, insert the weatherstrip into the door frame groove from Ⓐ point in the arrow-marked direction. (Fig. 10-88)
   - Insert the weatherstrip clip into the door panel up to its base.
2. **Check arm pin**

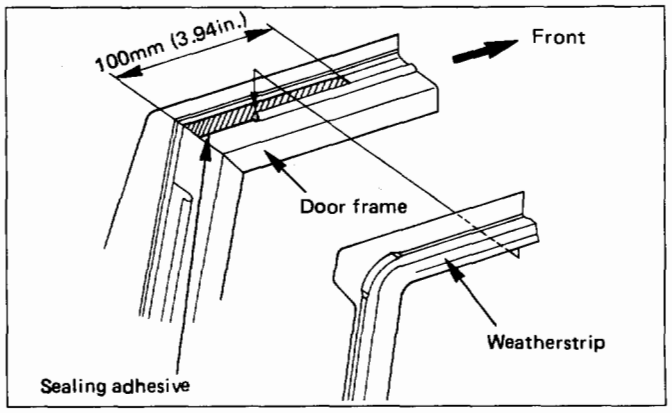

Fig. 10-91

REAR DOOR WEATHERSTRIP

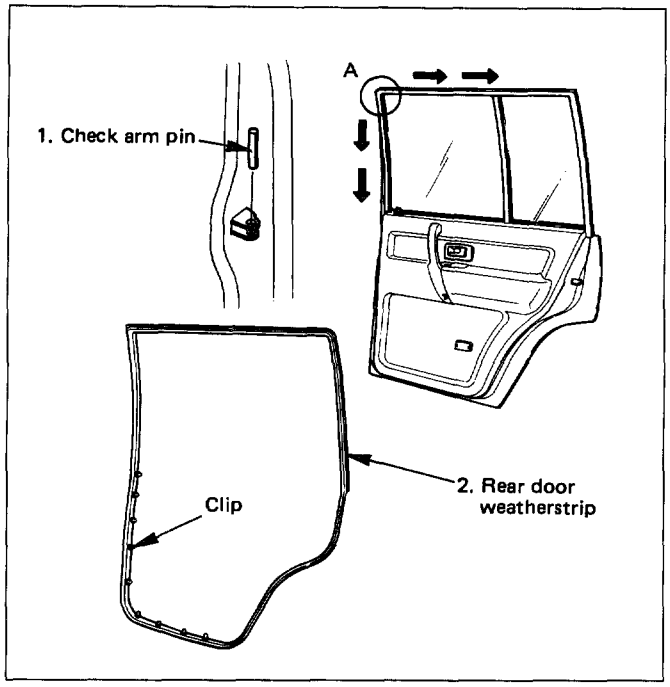

Fig. 10-92

REMOVAL AND INSTALLATION

Refer to "FRONT DOOR WEATHERSTRIP" in this section.

FRONT DOOR SEAL FINISHER

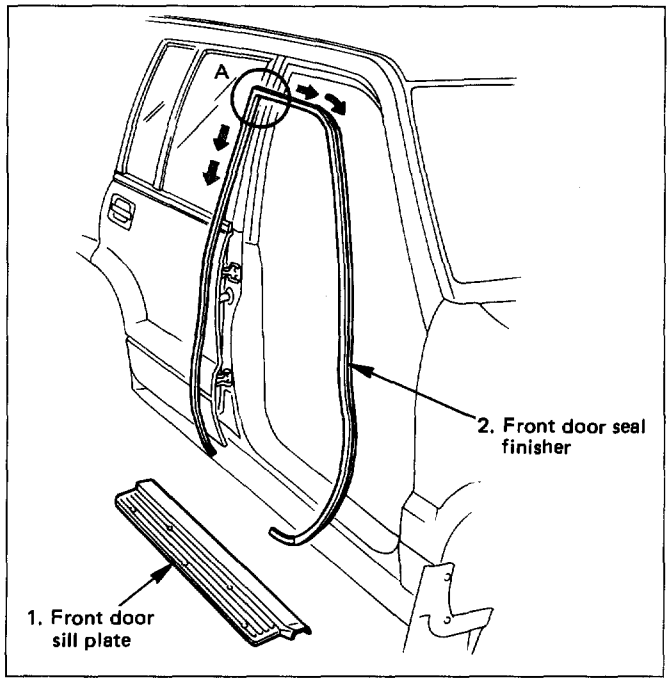

Fig. 10-93

REMOVAL

Preparation: Battery ground cable

1. **Front door sill plate**
2. **Front door seal finisher**
   - Pull the finisher out from body panel. (Fig. 10- 94)

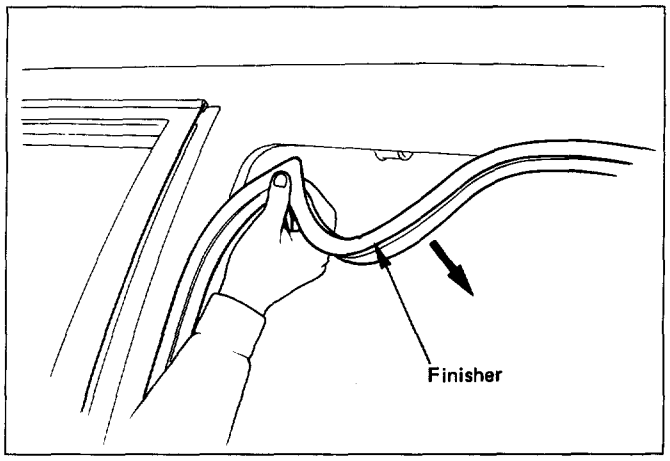

Fig. 10-94

INSTALLATION

2. **Front door seal finisher**
   - Insert the finisher into the Ⓐ corner and install the finisher in the arrow-marked directions. (Fig. 10-93)
1. **Front door sill plate**
   - Be careful not to allow the sill plate to distort or twist the finisher.

REAR DOOR SEAL FINISHER

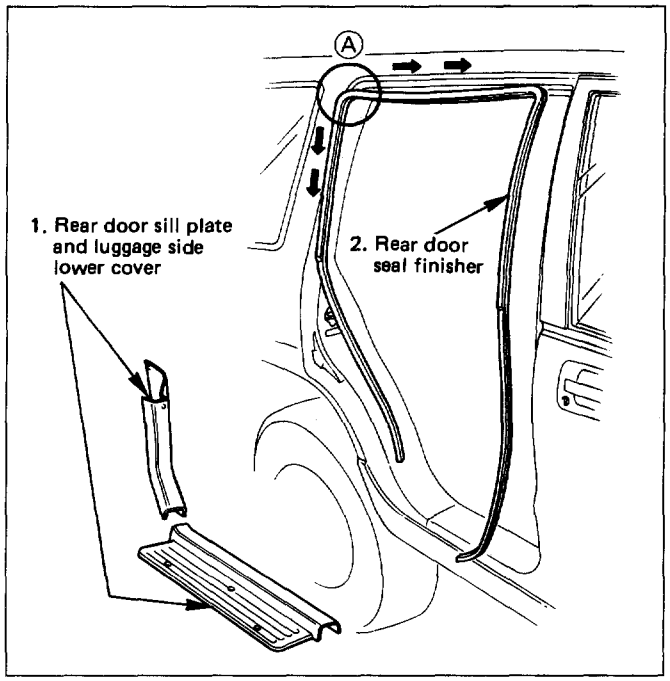

Fig. 10-95

REMOVAL

Preparation: Battery ground cable

1. **Rear door sill plate and luggage side lower cover**
2. **Rear door seal finisher**
   - Pull the finisher out from body panel. (Fig. 10-94)

INSTALLATION

2. **Rear door seal finisher**
   - Insert the finisher into the Ⓐ corner and install the finisher in the arrow-marked directions. (Fig. 10-95)
1. **Rear door sill plate and luggage side lower cover**
   - Be careful not to allow the sill plate and the cover to distort or twist the finisher.

DOOR MIRROR

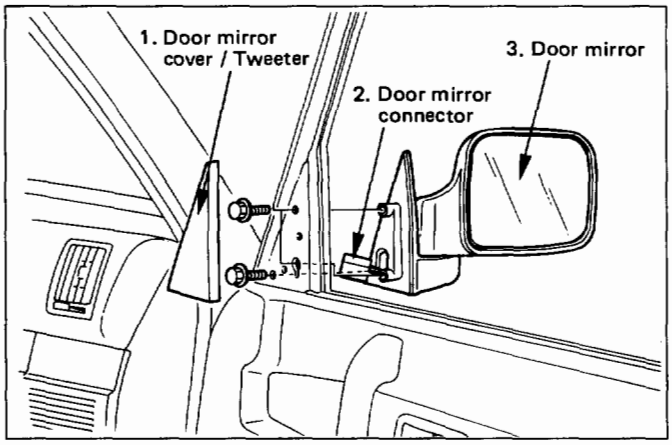

Fig. 10-96

REMOVAL

Preparation: Disconnect the battery ground cable

1. **Door mirror cover (Fig. 10-97)**
   - On a model equipped with a tweeter, remove the connectors. (Fig. 10-97)
2. **Door mirror connector**
3. **Door mirror**

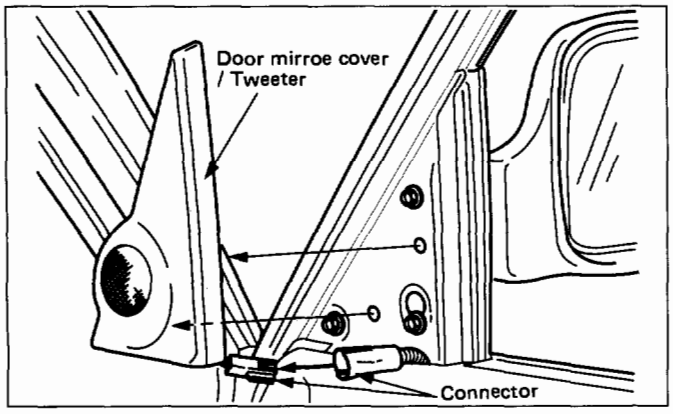

Fig. 10-97

INSTALLATION

To install, follow the removal steps in the reverse order, noting the following point.

1. When installing the door mirror, install the bolt to the mirror temporarily, hook the bolt to the door side hole and tighten it from the inside. (Fig. 10-98)

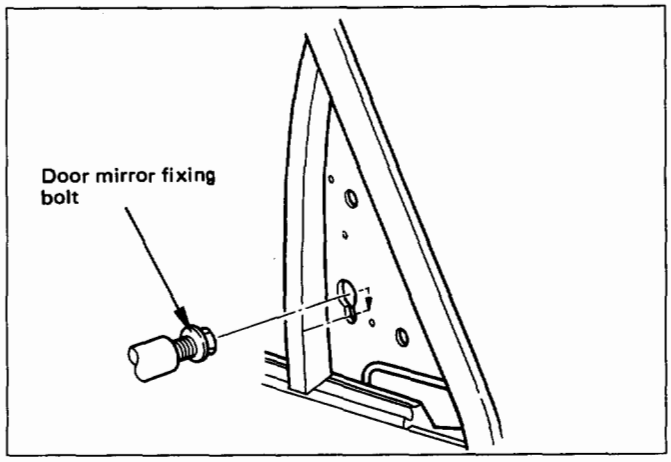

Fig. 10-98

2. When installing door mirror, hold the lip of glass run between mirror base and center sash. (Fig. 10-99)

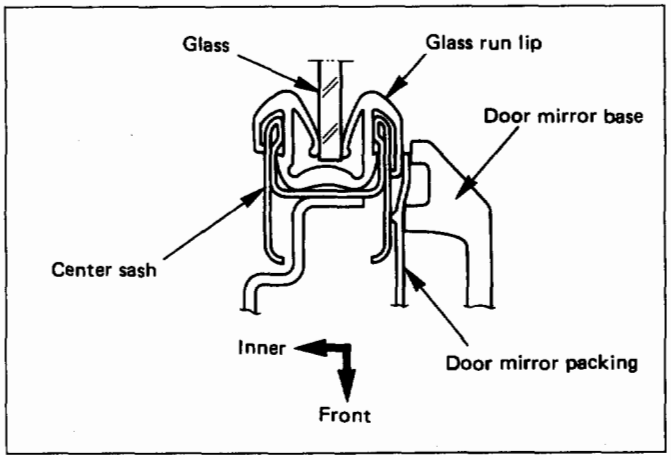

Fig. 10-99

3. Tighten the door mirror fixing bolts to the specified torque.

Torque	N·m (lb·in)	8 (69)

BODY SIDE

INTERIOR TRIM PANELS
LUGGAGE SIDE AND QUARTER UPPER TRIM COVER

Long Wheel Base

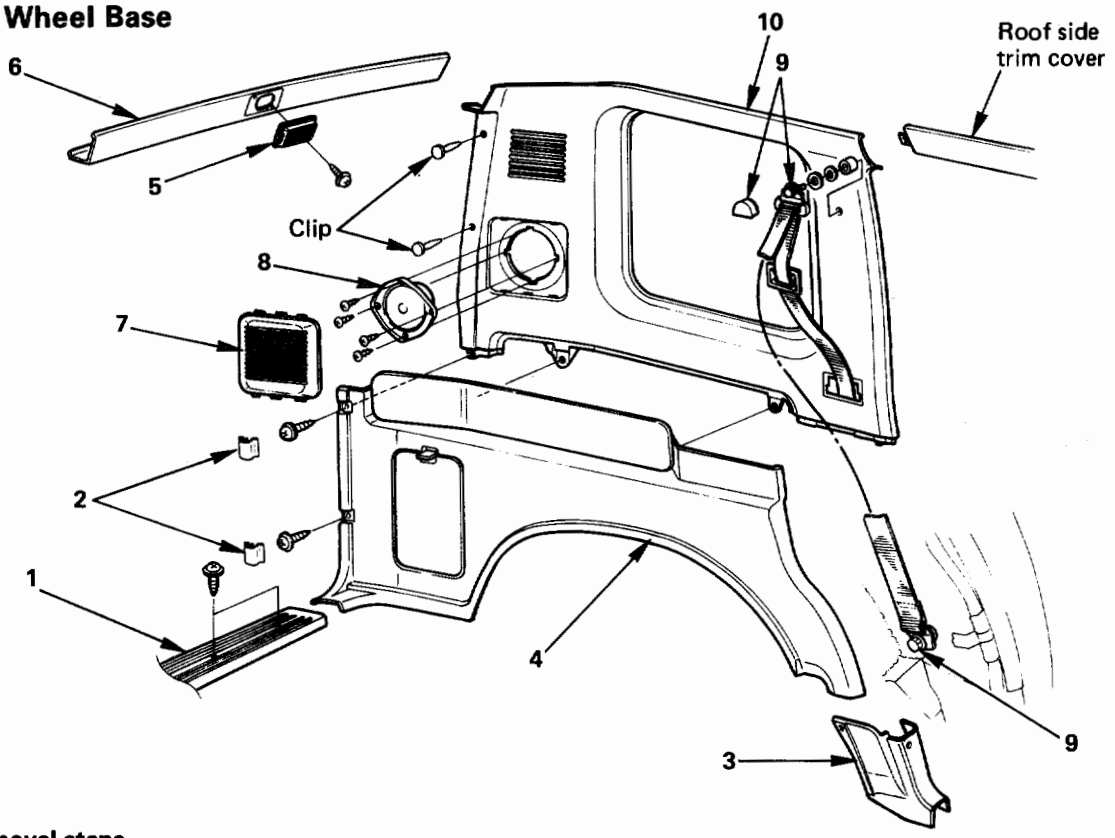

Removal steps
1. Rear end floor trim cover
2. Luggage side cap
3. Luggage side lower cover
4. Luggage side trim cover
5. Luggage room light
6. Rear roof trim cover
7. Speaker grille
8. Rear speaker
9. Rear seat belt anchor bolt cover and anchor bolt
10. Quarter upper trim cover

Installation steps
To install, follow the removal steps in the reverse order.

Fig. 10-100

REMOVAL

Preparation: Disconnect the battery ground cable

1. **Rear end floor trim cover**
2. **Luggage side cap**
3. **Luggage side lower cover**
4. **Luggage side trim cover**
   - Remove rear side fixing screws and pry trim cover retainers free from the body panel and upper trim cover. (Fig. 10-101)
5. **Luggage room light**
   - Remove luggage room light lens and fixing screws.
   - Disconnect luggage room light connector.
6. **Rear roof trim cover (Fig. 10-102)**
   - Pry trim cover retainers free from the body panel.

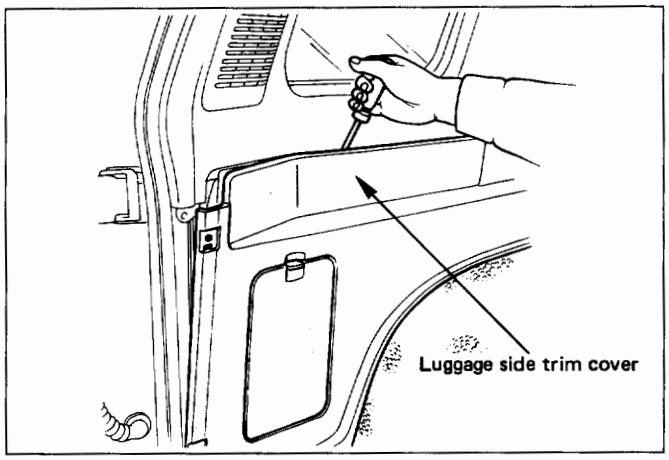

Fig. 10-101

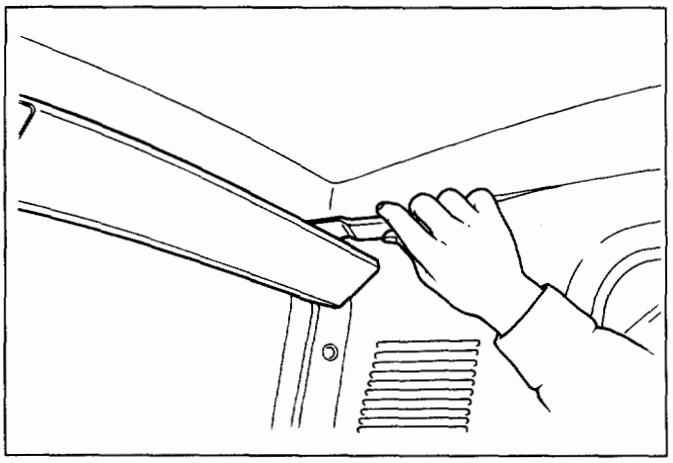

Fig. 10-102

7. **Speaker grille (Fig. 10-103)**
8. **Rear speaker**
   - Remove speaker fixing screws and disconnect the connector.
9. **Rear seat belt anchor bolt cover and anchor bolt (Fig. 10-104)**
10. **Quarter upper trim cover. (Fig. 10-105)**
    - Remove the rear side clips of the trim cover and pry trim cover retainers free from the body panel.

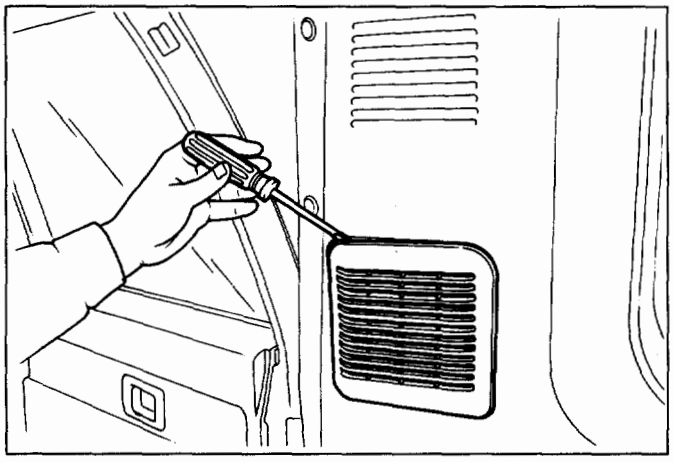

Fig. 10-103

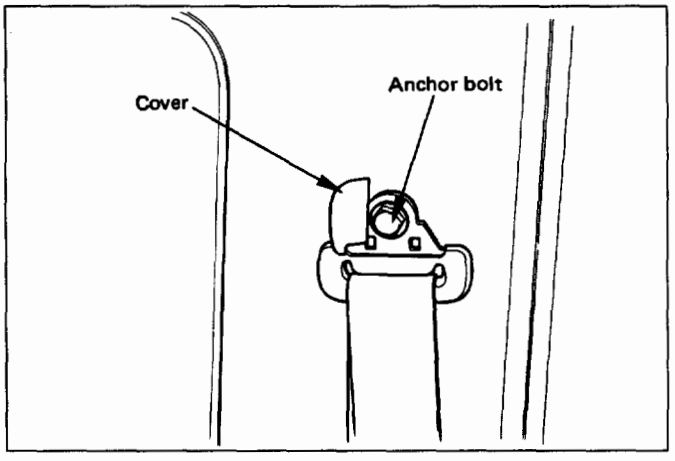

Fig. 10-104

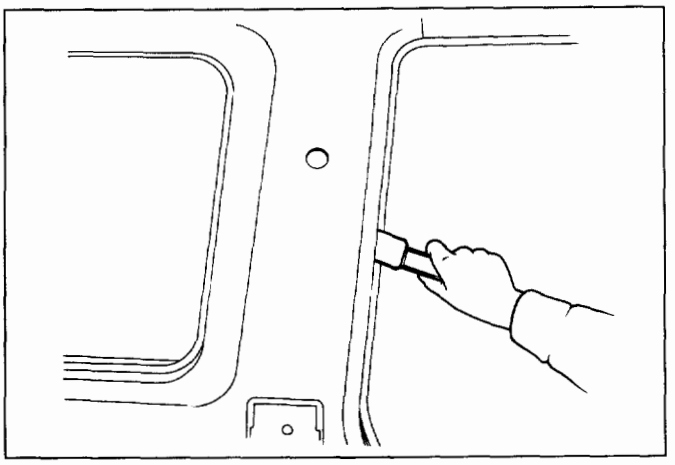

Fig. 10-105

INSTALLATION

To install, follow the removal steps in the reverse order, noting the following point.

1. Tighten the seat belt anchor bolt to the specified torque.

Torque	N·m (lb·ft)	39 (29)

Short Wheel Base

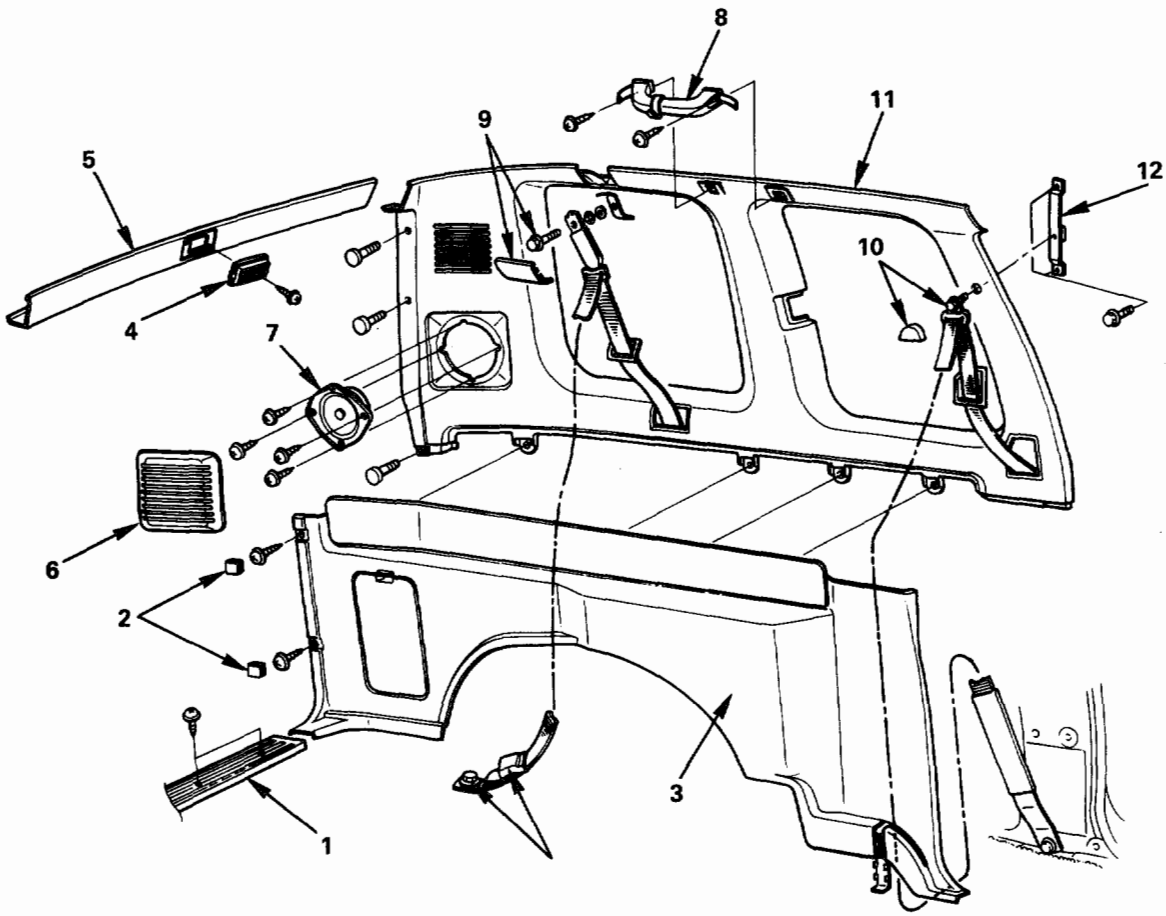

Removal steps

1. Rear end floor trim cover
2. Luggage side cap
3. Luggage side lower cover
4. Luggage room light
5. Rear roof trim cover
6. Speaker grille
7. Rear speaker
8. Rear assist grip
9. Rear seat belt anchor bolt cover and anchor bolt
10. Front seat belt anchor bolt cover and anchor bolt
11. Quarter upper trim cover
12. Seat belt anchor plate

Installation steps

To install, follow the removal steps in the reverse order.

Fig. 10-106

REMOVAL

Preparation: Disconnect the battery ground cable

1. **Rear end floor trim cover**
2. **Luggage side cap**
3. **Luggage side lower cover**
   - Remove rear side fixing screws and pry trim cover retainers free from the body panel and upper trim cover. (Fig. 10-107)

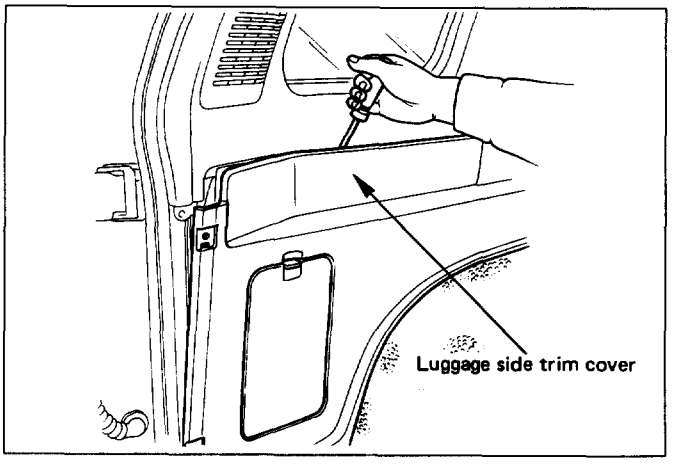

Fig. 10-107

4. **Luggage room light**
   - Remove luggage room light lens and fixing screws.
     Disconnect luggage room light connector.
5. **Rear roof trim cover (Fig. 10-108)**
   - Pry trim cover retainers free from the body panel.

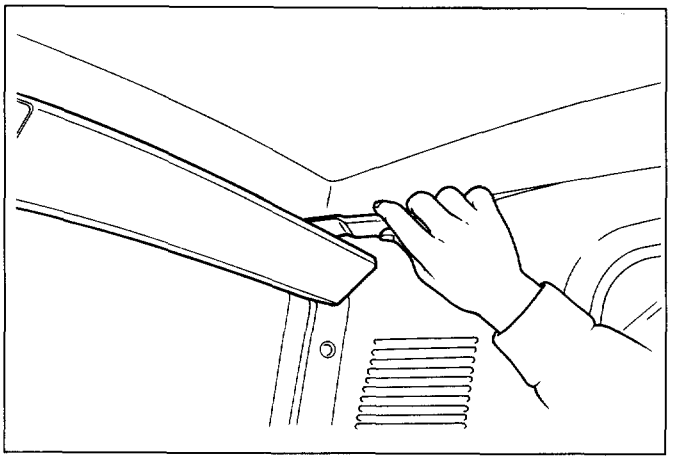

Fig. 10-108

6. **Speaker grille (Fig. 10-109)**

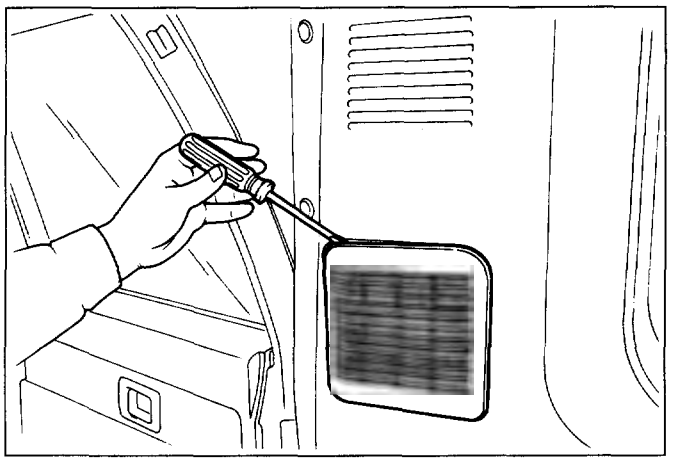

Fig. 10-109

7. **Rear speaker**
   - Remove the rear speaker fixing screws and disconnect the connector.
8. **Rear assist grip**
   - Open the both side covers of the assist grip and fixing screws. (Fig. 10-110)

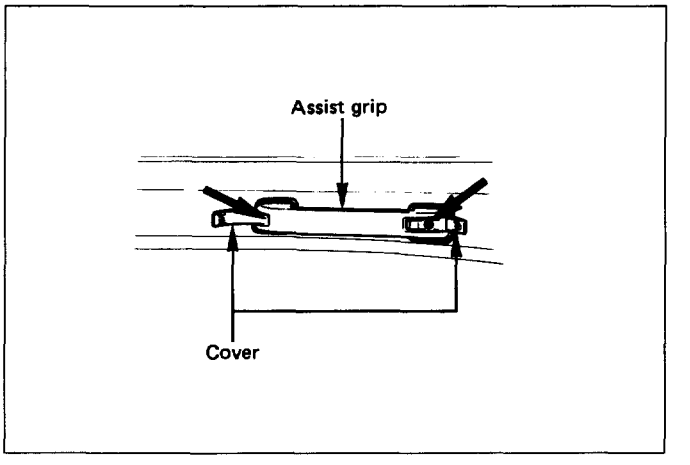

Fig. 10-110

9. **Rear seat belt anchor bolt cover and anchor bolt (Fig. 10-110)**

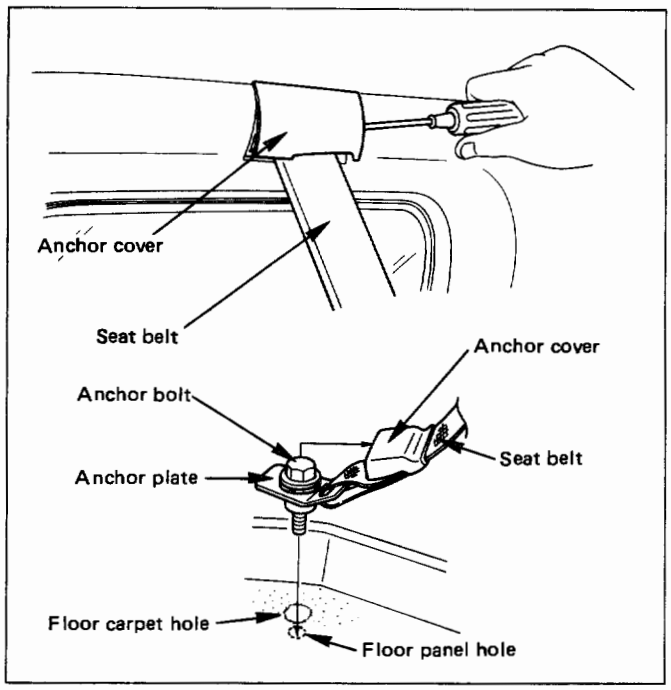

Fig. 10-111

10. **Front seat belt anchor bolt cover and anchor bolt (Fig. 10-112)**

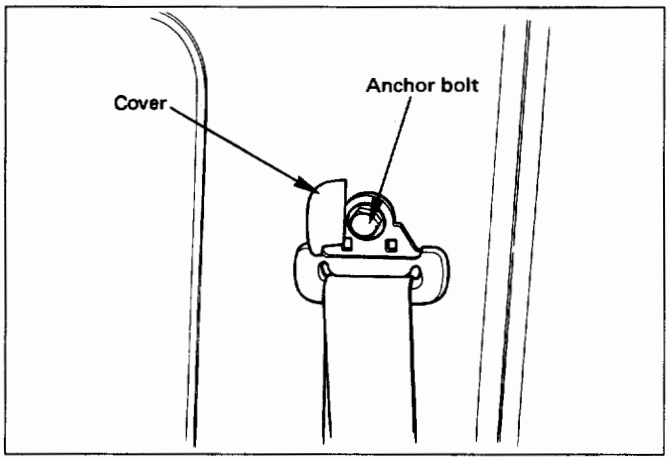

Fig. 10-112

11. **Quarter upper trim cover**
    - Remove the rear side clips of the trim cover and pyr trim cover retainers free from the body panel. (Fig. 10-113)
12. **Seat belt anchor plate**

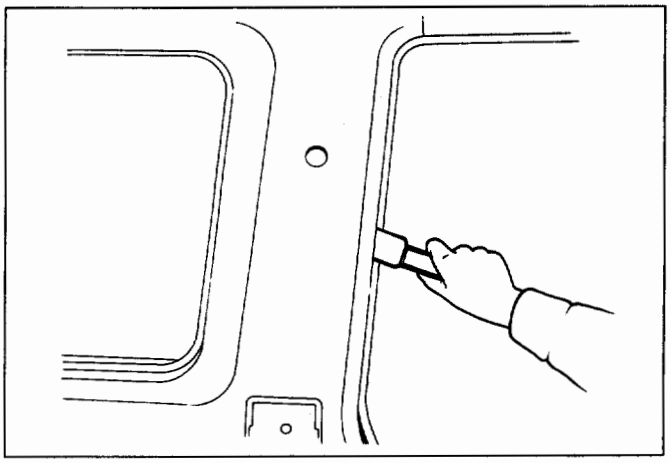

Fig. 10-113

INSTALLATION

To install, follow the removal steps in the reverse order, noting the following point.

1. Tighten the seat belt anchor bolt to the specified torque.

Torque	N·m (lb·ft)	39 (29)

CENTER PILLAR AND ROOF SIDE TRIM COVER (L·W·B ONLY)

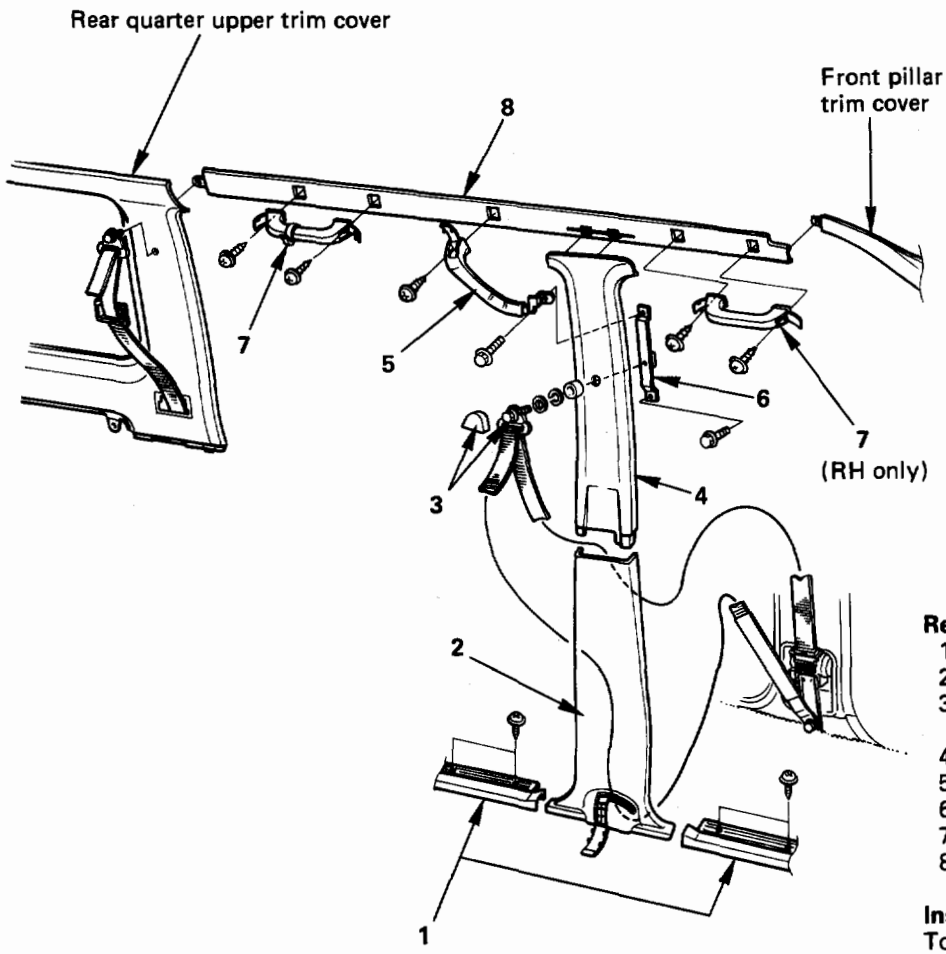

Removal steps

1. Door sill plate (Front and rear)
2. Center pillar lower trim cover
3. Front seat anchor bolt cover and anchor bolt
4. Center pillar upper trim cover
5. Center pillar assist grip
6. Seat belt anchor plate
7. Assist grip
8. Roof side trim cover

Installation steps

To install, follow the removal steps in the reverse order.

Fig. 10-114

REMOVAL

Preparation: Disconnect the battery ground cable

1. **Door sill plate (Front and rear)**
2. **Center pillar lower trim cover (Fig. 10-115)**
   - Turn up the finisher and pry the trim cover retainers free from the body panel, then slide the trim cover to the downward.
3. **Front seat belt anchor bolt cover and anchor bolt (Fig. 10-104)**
4. **Center pillar upper trim cover (Fig. 10-116)**
   - Turn up the finisher and pry the trim cover retainers free from the body panel.
5. **Center pillar assist grip**
6. **Seat belt anchor plate**
7. **Assist grip (Fig. 10-117)**
   - Open the both side assist grip cover and remove 2 fixing screws.

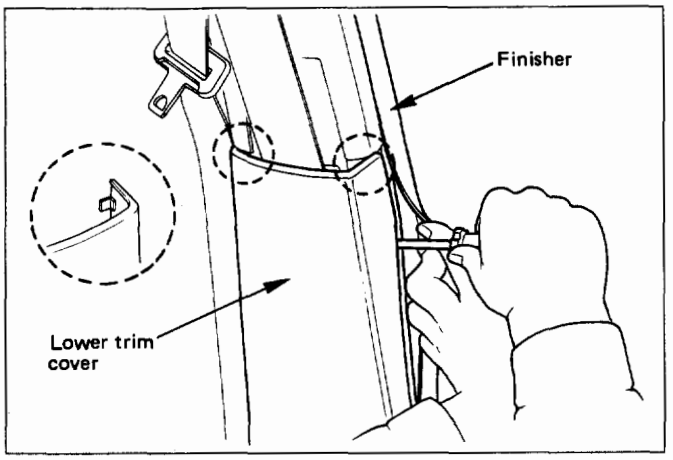

Fig. 10-115

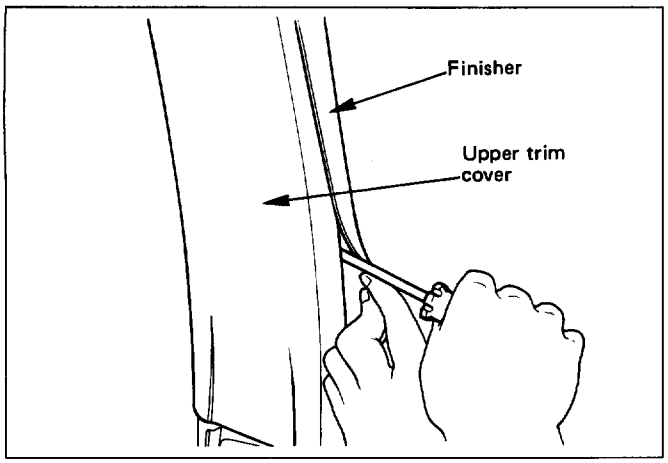

Fig. 10-116

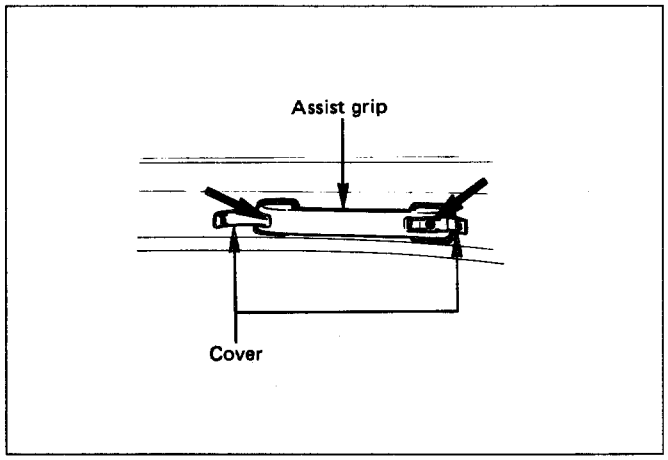

Fig. 10-117

8. **Roof side trim cover (Fig. 10-118)**
   - Turn up the finisher and pry the trim cover retainers free from the body panel.

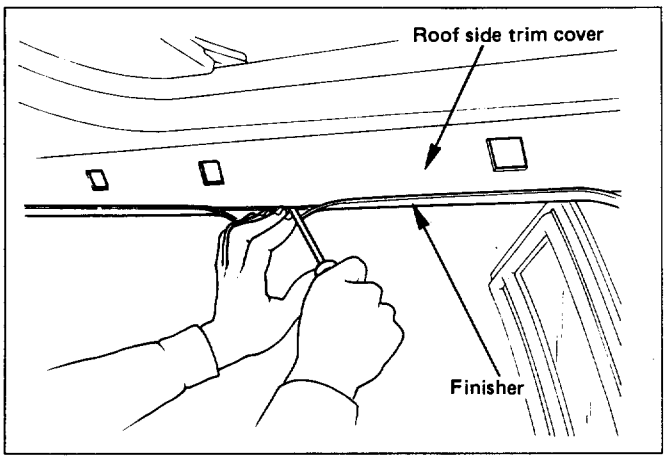

Fig. 10-118

INSTALLATION

To install, follow the removal steps in the reverse order, noting the following point.

1. Tighten the seat belt anchor bolts to the specified torque.

Torque	N·m (lb·ft)	39 (29)

ROOF SIDE TRIM COVER (S·W·B ONLY)

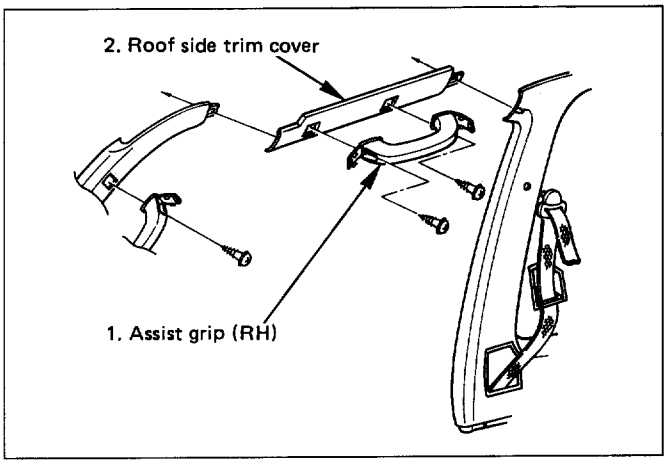

Fig. 10-119

REMOVAL

1. **Assist grip (RH)**
   - Open the both side covers and remove the fixing screws. (Fig. 10-117)
2. **Roof side tirm cover**
   - Turn up the finisher and pry the trim cover retainers free from body panel. (Fig. 10-120)

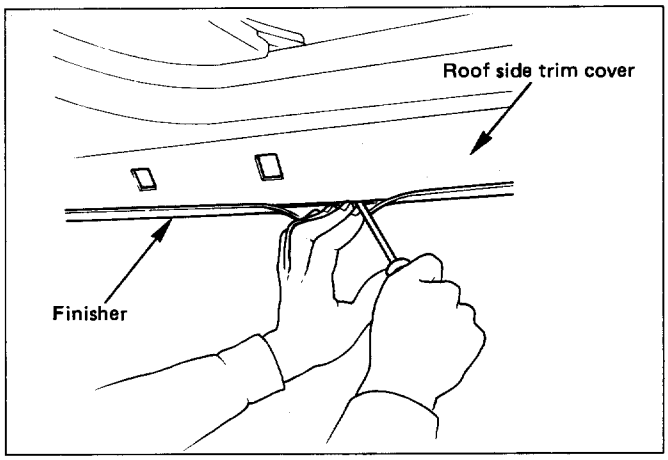

Fig. 10-120

INSTALLATION

To install, follow the removal steps in the reverse order.

FRONT PILLAR TRIM COVER

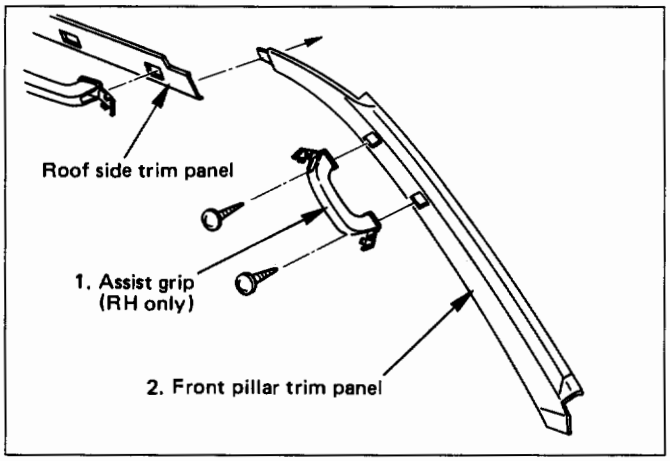

Fig. 10-121

REMOVAL

1. **Front pillar assist grip (Fig. 10-117)**
   - Open the both side covers and remove the fixing screws.
2. **Front pillar trim cover (Fig. 10-122)**
   - Turn up the finisher and pry the trim cover retainers free from the body panel.

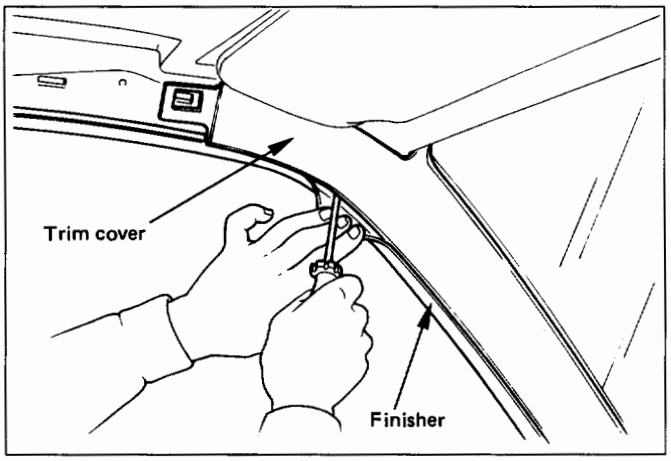

Fig. 10-122

INSTALLATION

To install, follow the removal steps in the reverse order.

CENTER PILLAR ASSIST GRIP

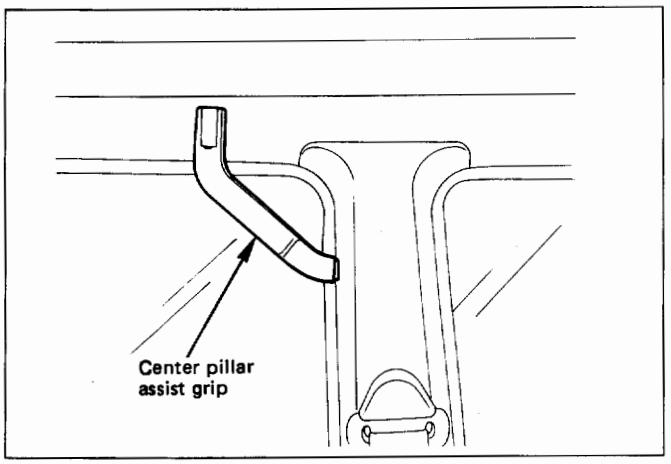

Fig. 10-123

REMOVAL AND INSTALLATION

Refer to "CENTER PILLAR AND ROOF SIDE TRIM COVER" in this section.

ASSIST GRIP

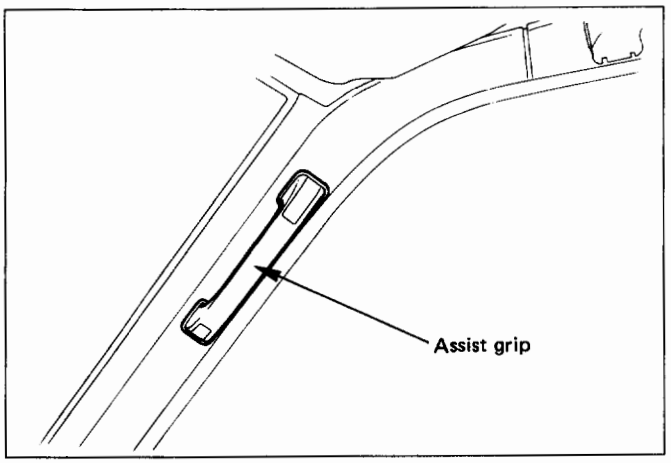

Fig. 10-124

REMOVAL AND INSTALLATION

Refer to "CENTER PILLAR AND ROOF SIDE TRIM COVER" (Fig. 10-98) in this section.

FUEL FILLER LID OPENER CABLE

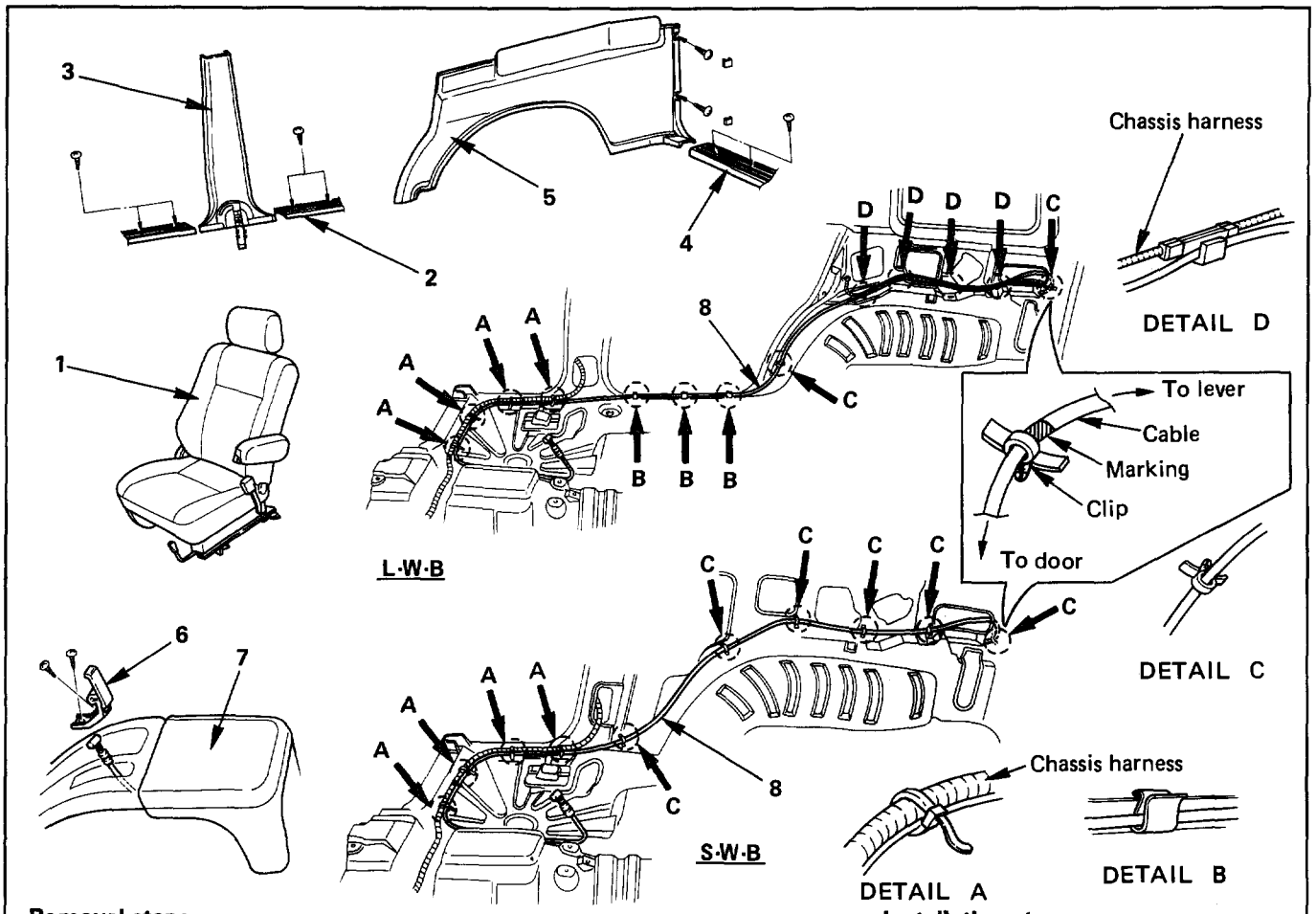

Removal steps

1. Front seat (RH)
2. Rear door sill plate (RH)(L·W·B)
3. Center pillar lower trim cover (L·W·B)
4. Rear end floor trim cover
5. Luggage side trim panel (RH)
6. Fuel filler lid opener
7. Center console assembly
8. Fuel filler lid opener cable

Installation steps

To install, follow the removal steps in the reverse order.

Fig. 10-125

REMOVAL

Preparation: Battery ground cable

1. **Front seat (RH)**
2. **Rear door sill plate (RH) (L·W·B)**
3. **Center pillar lower trim cover (L·W·B)**
4. **Rear end floor trim panel**
5. **Luggage side trim panel (RH)**
   - Refer to "INTERIOR TRIM PANELS" in this section.
6. **Fuel filler lid opener (Fig. 10-126)**
   - Remove opener 2 fixing screws and disconnect the cable.
7. **Center console assembly**
8. **Fuel filler lid opener cable**
   - Roll up the floor carpet and remove the clips of the chassis harness and body panel to pull out the cable toward the fuel filler lid.

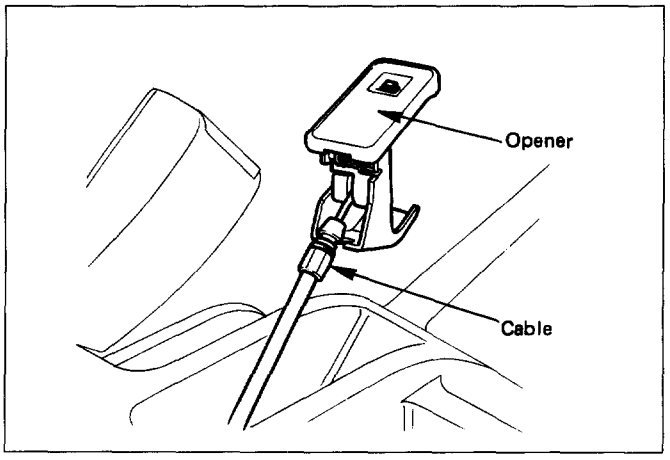

Fig. 10-126

INSTALLATION

To install, follow the removal steps in the reverse order, noting the following points.

1. Insert the opener cable into the body panel securely. (Fig. 10-127)

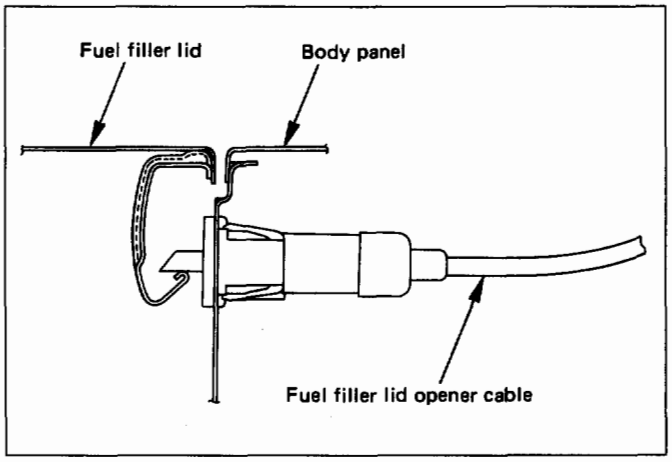

Fig. 10-127

2. Install the cable and clips to its original position to the chassis harness and the body panel.
3. Check that the opener operates smoothly.

FUEL FILLER DOOR

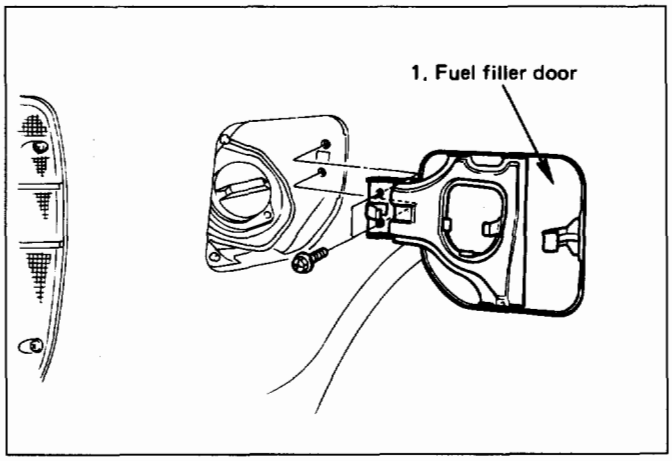

Fig. 10-128

REMOVAL

1. **Fuel filler door**

INSTALLATION

1. **Fuel filler door**

ROCKER PROTECTOR (WITHOUT WHEEL OPENING EXTENSION)

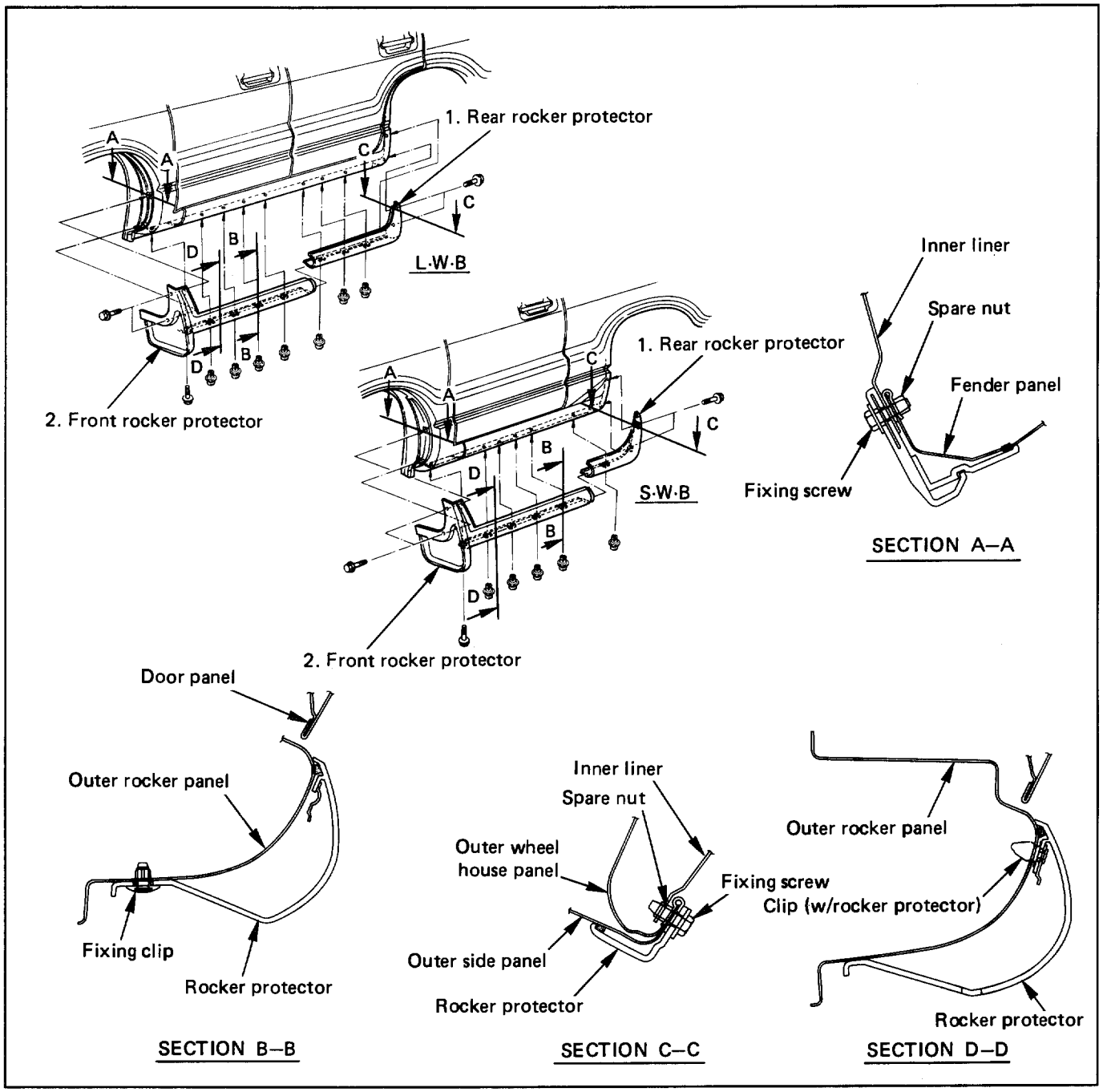

Fig. 10-129

REMOVAL

1. **Rear rocker protector**
2. **Front rocker protector**

INSTALLATION

To install, follow the removal steps in the reverse order.

WHEEL OPENING EXTENSION AND ROCKER PROTECTOR ASSEMBLY

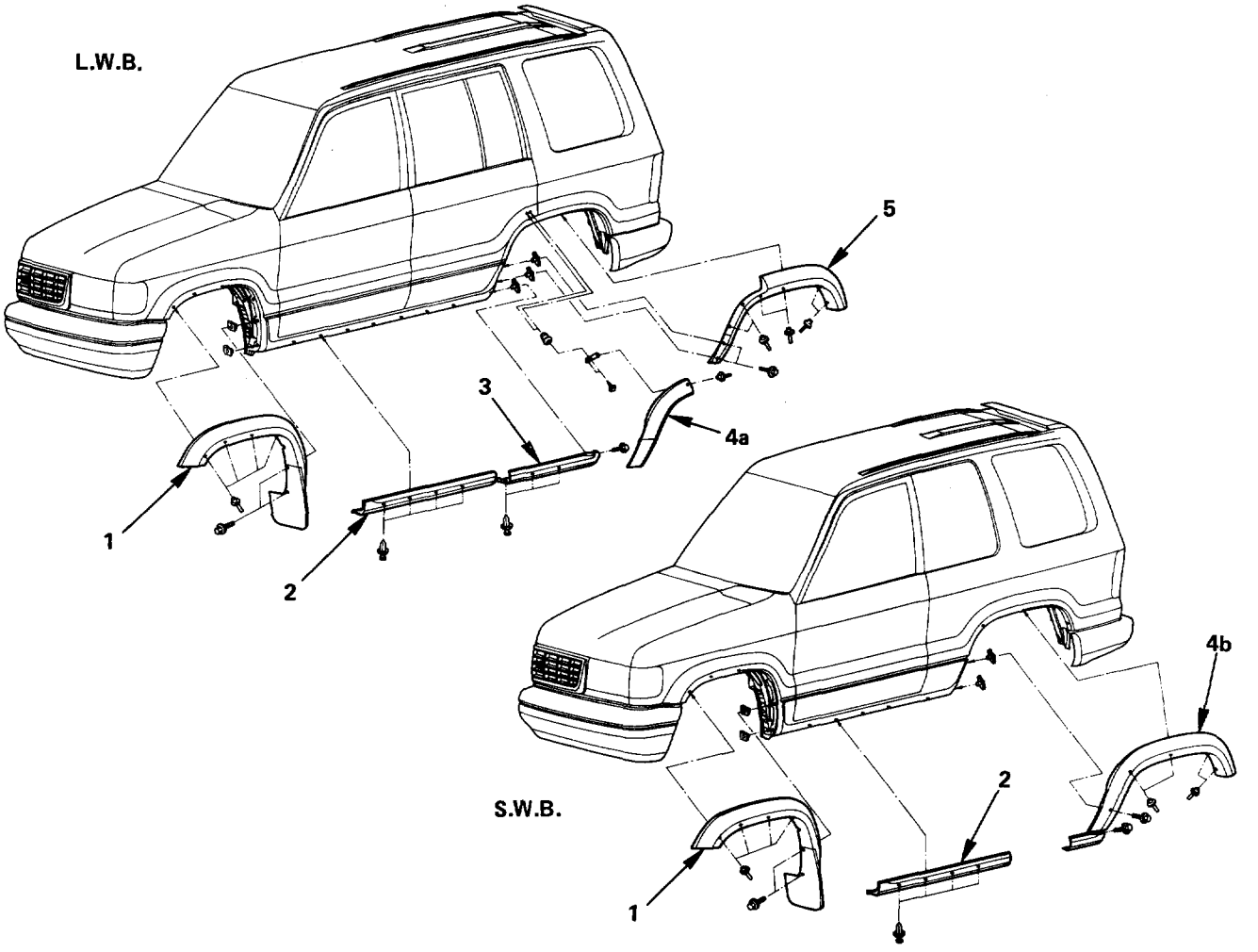

Removal steps
1. Front wheel opening extension assembly
2. Front rocker protector assembly
3. Rear rocker protector assembly (Only LWB)
4a. Rear quarter wheel opening extension assembly (Only LWB)
4b. Rear wheel opening extension assembly (Only SWB)
5. Rear door wheel opening extension assembly (Only LWB)

Installation steps
To install, follow the removal steps in the reverse order.

Fig. 10-130

REMOVAL

1. **Front wheel opening extension assembly**
   - Let a 5 mm drill go through 4 blind rivets to disengage riveted portions. Remove 2 screws and disengage 5 clips, then remove the front wheel opening extension assembly. (Fig. 10-131)
2. **Front rocker protector assembly**
   - Loosen and pull 4 clips, peel off the bonded portions with a 2-sided adhesive tape, and remove the front rocker protector assembly.

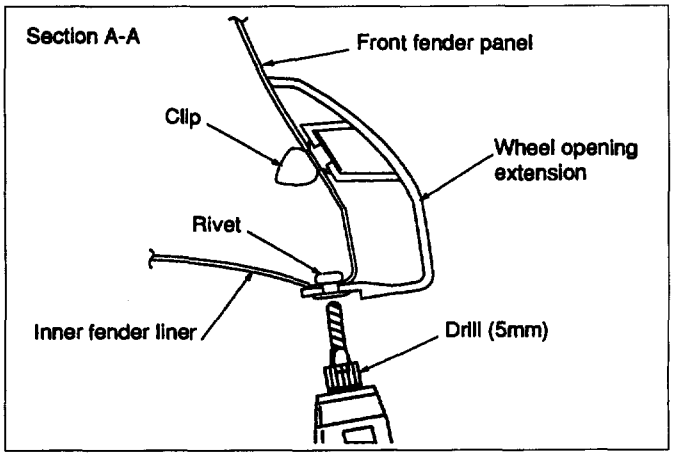

Fig. 10-131

3. **Rear rocker protector assembly (Only LWB)**
   - Loosen and pull 3 clips, remove a rear screw, peel off the bonded portions with a 2-sided adhesive tape, and remove the rear rocker protector assembly.

4a. **Rear quarter wheel opening extension assembly (Only LWB)**
   - Let a 5 mm drill go through 6 blind rivets to disengage riveted portions. Disengage 3 clips, and remove the rear quarter wheel opening extension assembly.

4b. **Rear wheel opening extension assembly (Only SWB)**
   - Let a 5 mm drill go through 4 blind rivets to disengage riveted portions. Remove 2 screws, disengage 8 clips, and remove the rear wheel opening extension assembly.
   - Remove 2 fixing nuts (upper) and 4 fixing bolts (lower). (Fig.10-130)

5. **Rear door wheel opening extension assembly (Only LWB)**
   - Let a 5 mm drill go through 8 blind rivets to disengage riveted portions. Disengage 3 clips, and remove the rear door wheel opening extension assembly.

INSTALLATION

To intall, follow the removal steps in the reverse order, noting the following points.

1. Use a new 2-sided adhesive tape whenever installing each wheel opening extension assembly and rocker protector assembly. Using a white gasoline, clean the places in advance where a 2-sided adhesive tape is affixed. Also, install the clips, screws and blind rivets in the order specified. (Fig. 10-132)

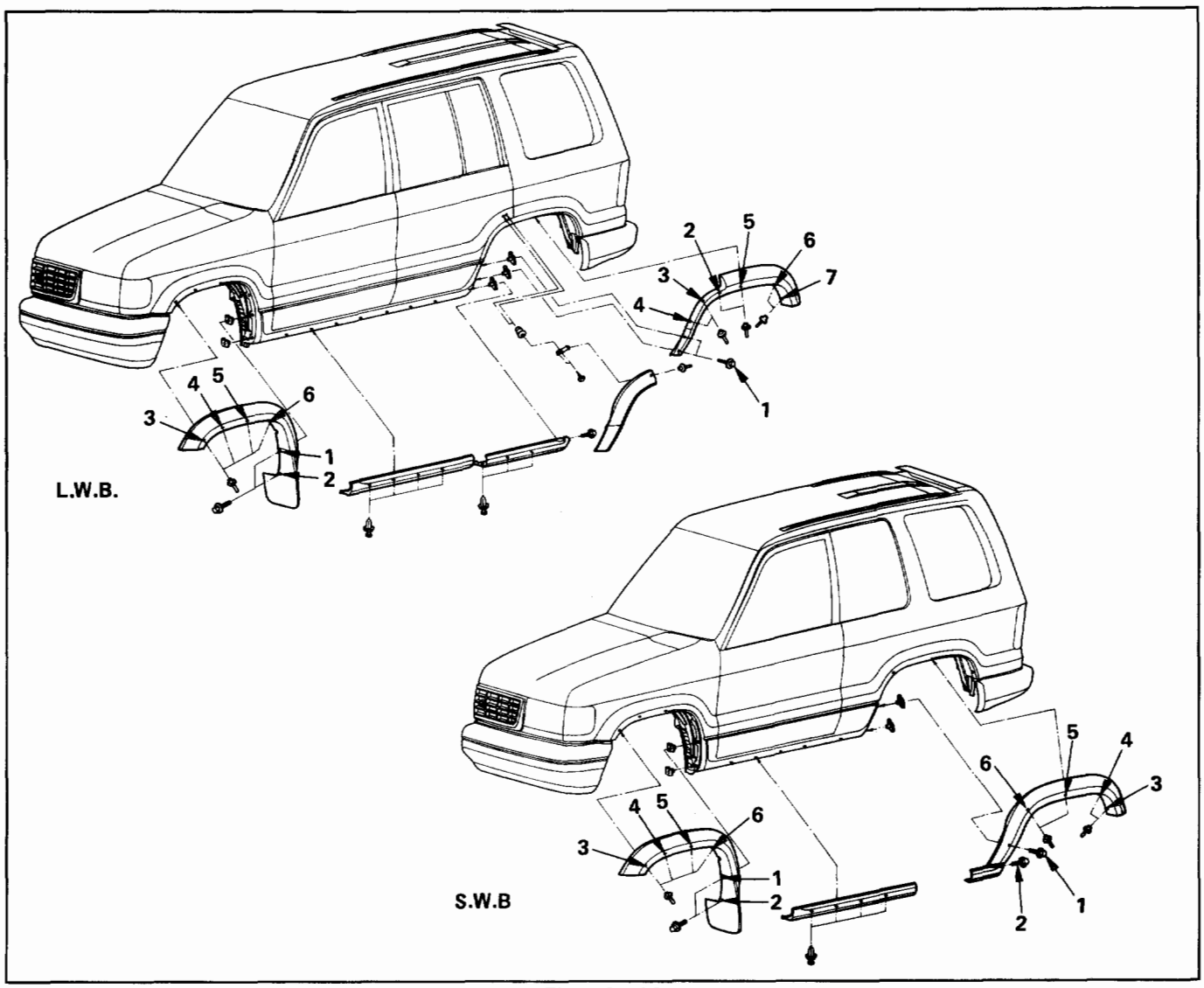

Fig. 10-132

MUD FLAPS (WITH WHEEL OPENING EXTENSION)

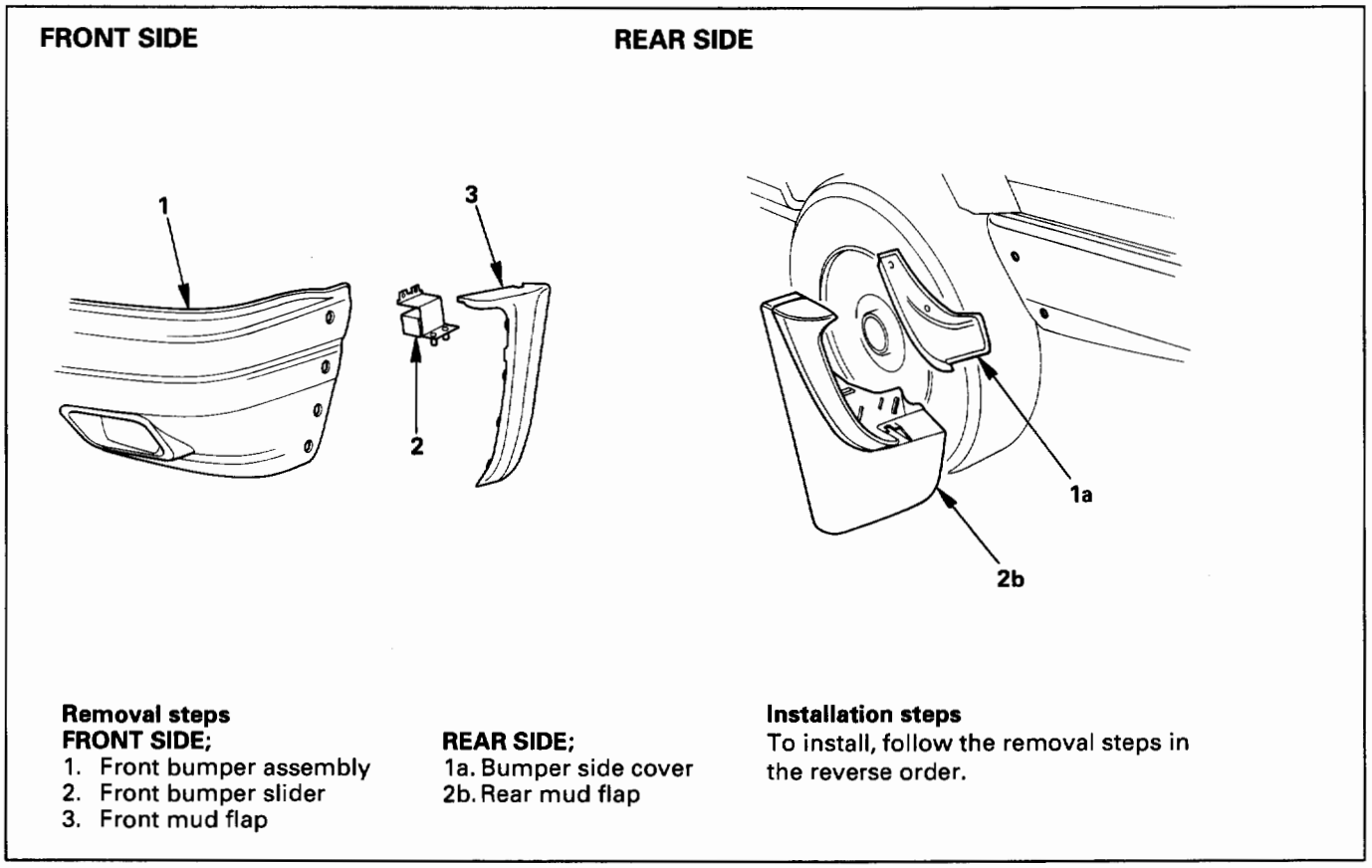

Removal steps

FRONT SIDE;
1. Front bumper assembly
2. Front bumper slider
3. Front mud flap

REAR SIDE;
1a. Bumper side cover
2b. Rear mud flap

Installation steps
To install, follow the removal steps in the reverse order.

Fig. 10-133

REMOVAL

FRONT SIDE;

1. **Front bumper assembly**
   - Disconnect the front fog light connector and remove the 2 bolts from both sides of the front bumper.
2. **Front bumper slider (Fig.10-134)**
   - Remove 2 screws and 2 nuts, release the claw from the washer.

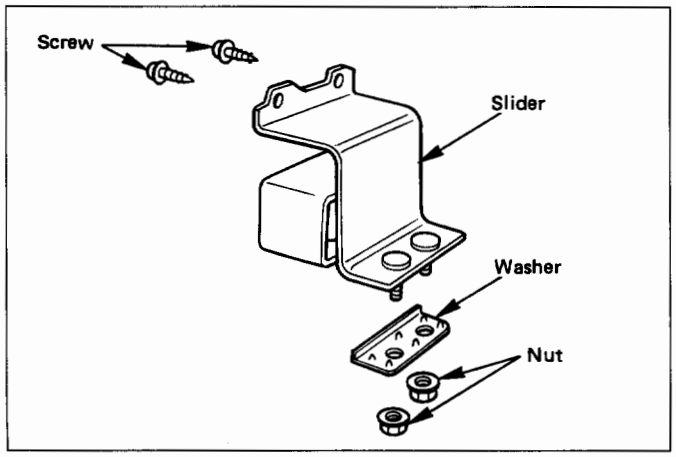

Fig. 10-134

3. **Front mud flap (Fig.10-135)**
   - Remove 4 bolts and 1 nut.

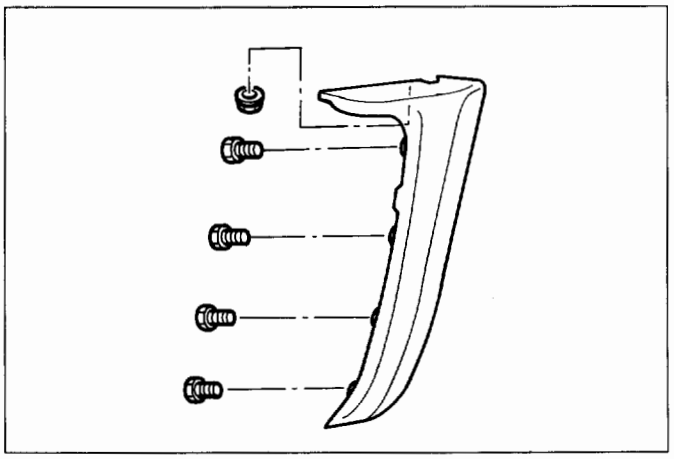

Fig. 10-135

REAR SIDE;

1a. Bumper side cover

2b. Rear mud flap
- Remove 4 bolts and 2 nuts.

INSTALLATION

To intall, follow the removal steps in the reverse order.

VENTILATION ASSEMBLY

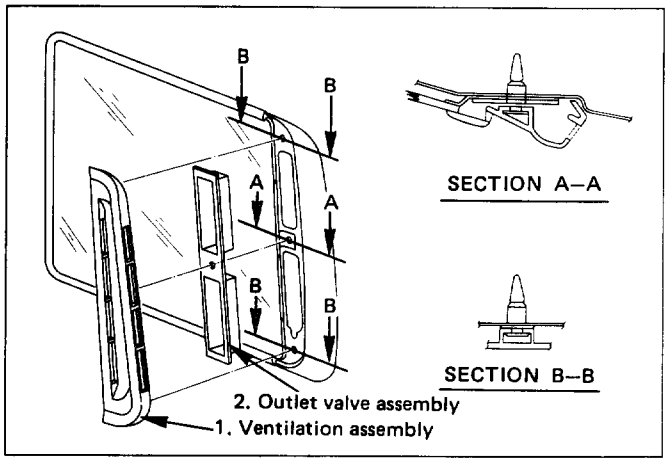

Fig. 10-136

REMOVAL

1. **Ventilation assembly**
   - Pry the ventilation assembly retainers free from the body panel. (Fig. 10-137)
2. **Outlet valve assembly**

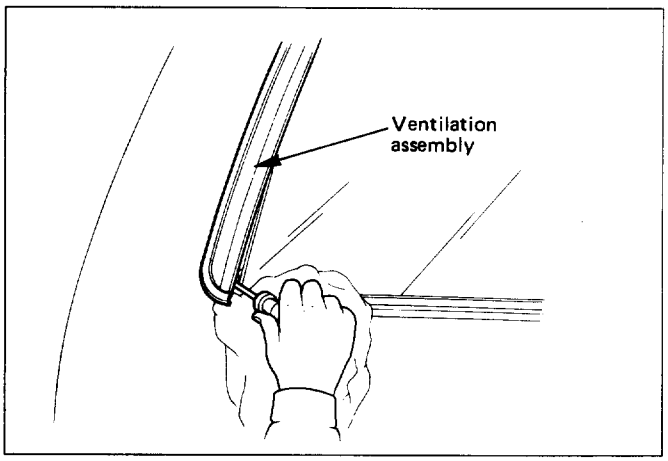

Fig. 10-137

INSTALLATION

2. **Outlet valve assembly**
   - Insert the upper and lower catches of the outlet valve into the body panel flange and fix them securely.
1. **Ventilation assembly**
   - Fix the clips to the body panel securely so that the ventilation assembly will not come off the body panel.

QUARTER FLIPPER GLASS ASSEMBLY (S·W·B)

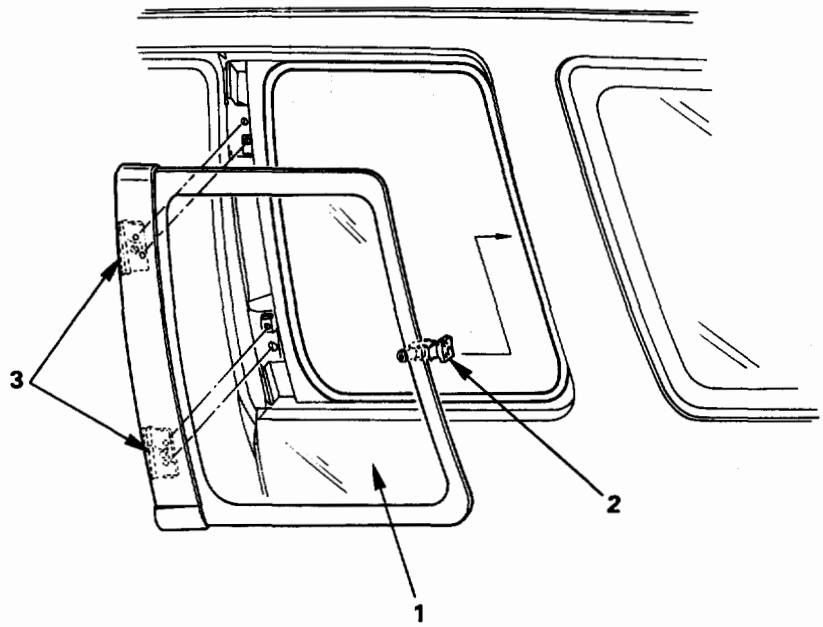

Removal steps
1. Quarter flipper glass assembly
2. Fastener
3. Hinge assembly

Installation steps
To install, follow the removal steps in the reverse order.

Fig. 10-138

REMOVAL

1. **Quarter flipper glass assembly**
   - Remove the fixing screws and rivet. (Fig. 10-139)

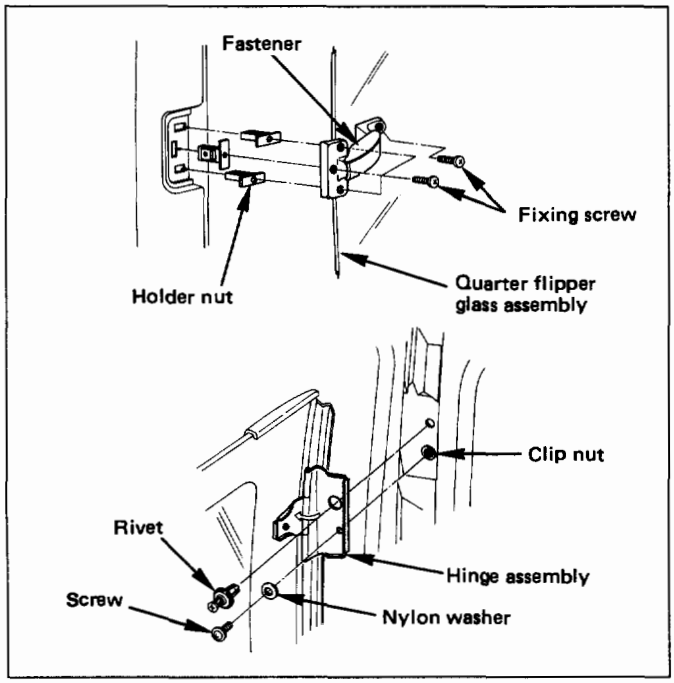

Fig. 10-139

2. **Fastener**
3. **Hinge assembly**

INSTALLATION

To install, follow the removal steps in the reverse order.

REAR END

TAILGATE ASSEMBLY (LH)

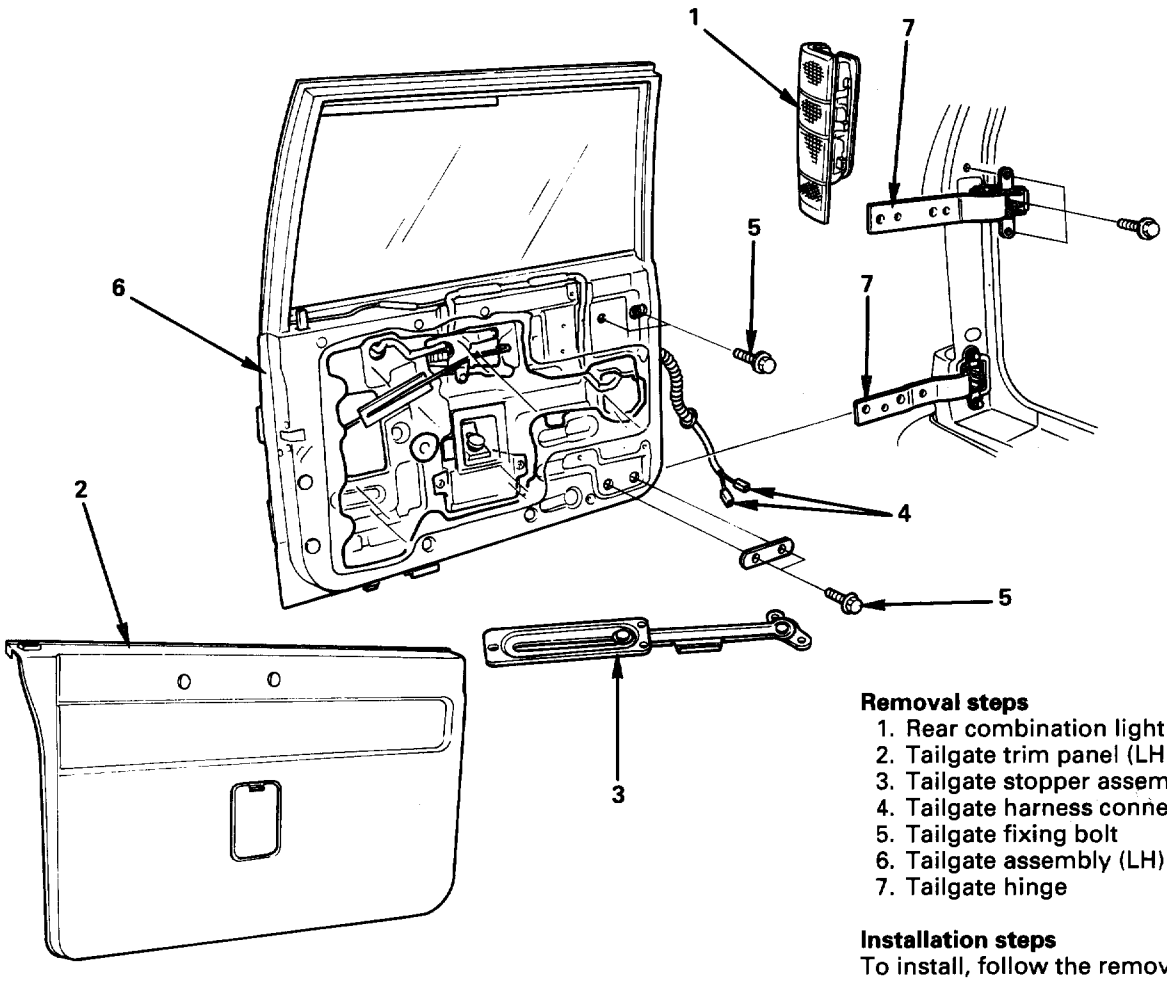

Removal steps
1. Rear combination light (LH)
2. Tailgate trim panel (LH)
3. Tailgate stopper assembly
4. Tailgate harness connection
5. Tailgate fixing bolt
6. Tailgate assembly (LH)
7. Tailgate hinge

Installation steps
To install, follow the removal steps in the reverse order.

Fig. 10-140

REMOVAL

Preparation: Disconnect the battery ground cable

1. **Rear combination light (LH)**
2. **Tailgate trim panel (LH)**
   - Refer to "TAILGATE TRIM PANEL (LH)" in this section.
3. **Tailgate stopper assembly**
4. **Tailgate harness connection (Fig. 10-141)**
   - Open the luggage trim panel lid and disconnect the tailgate harness connection.
5. **Tailgate fixing bolt (Fig. 10-142)**
6. **Tailgate assembly (LH)**
7. **Tailgate hinge (Fig. 10-143)**
   - Remove the hinge fixing bolts.

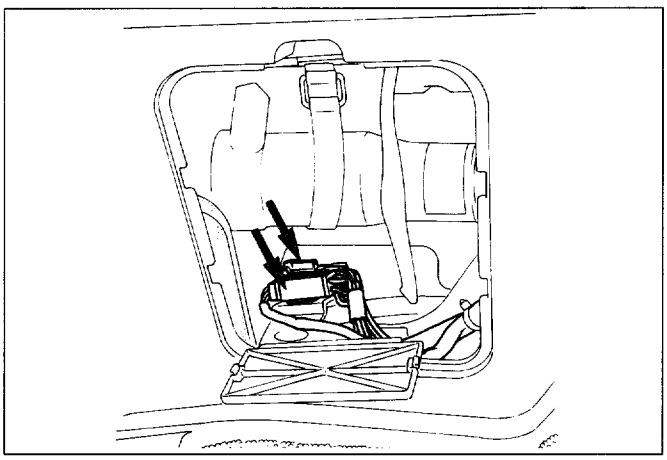

Fig. 10-141

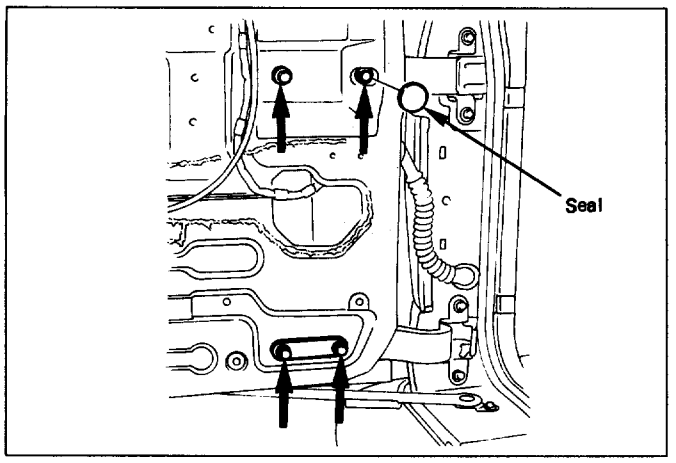

Fig. 10-142

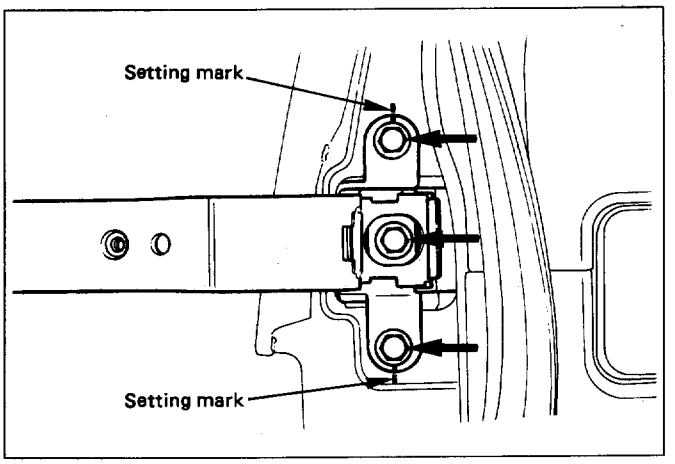

Fig. 10-143

INSTALLATION

To install, follow the removal steps in the reverse order, noting the following points.

1. Apply chassis grease to the tailgate hinge and tailgate stopper moving surface.
2. Align the tailgate fitting to the body by referring to "BODY DIMENSION" in this section.
3. Tighten the hinge bolts to the specified torque.

Torque	N·m (lb·ft)	34 (25)

TAILGATE ASSEMBLY (RH)

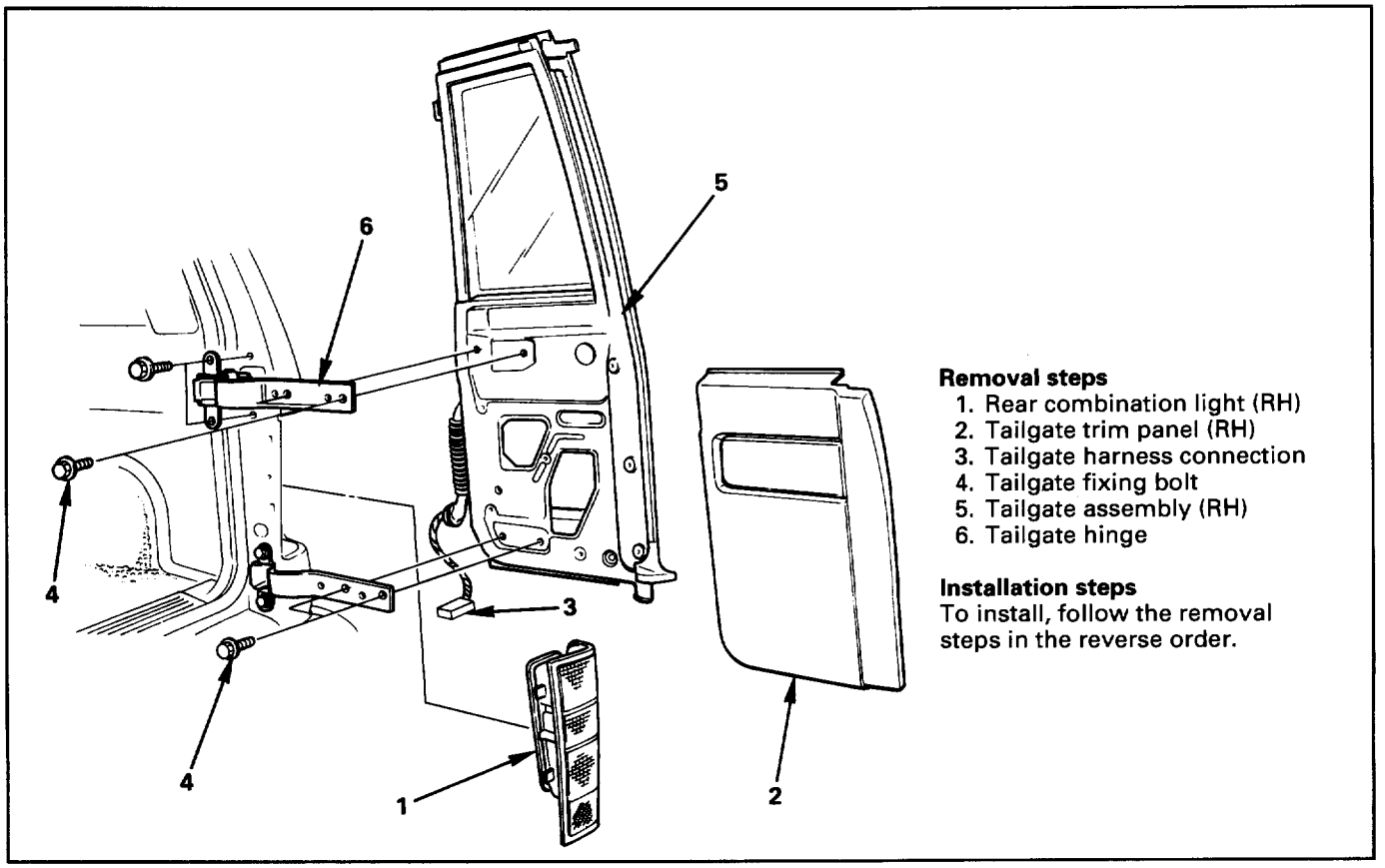

Removal steps

1. Rear combination light (RH)
2. Tailgate trim panel (RH)
3. Tailgate harness connection
4. Tailgate fixing bolt
5. Tailgate assembly (RH)
6. Tailgate hinge

Installation steps

To install, follow the removal steps in the reverse order.

Fig. 10-144

REMOVAL

Preparation: Disconnect the battery ground cable

1. **Rear combination light (RH)**
2. **Tailgate trim panel (RH)**
   - Refer to "TAILGATE TRIM PANEL (RH)" in this section.
3. **Tailgate harness connection (Fig. 10-145)**
   - Disconnect the tailgate harness connection.
4. **Tailgate fixing bolt (Fig. 10-146)**
5. **Tailgate assembly (RH)**
6. **Tailgate hinge**
   - Remove the hinge fixing bolts (Fig. 10-147).

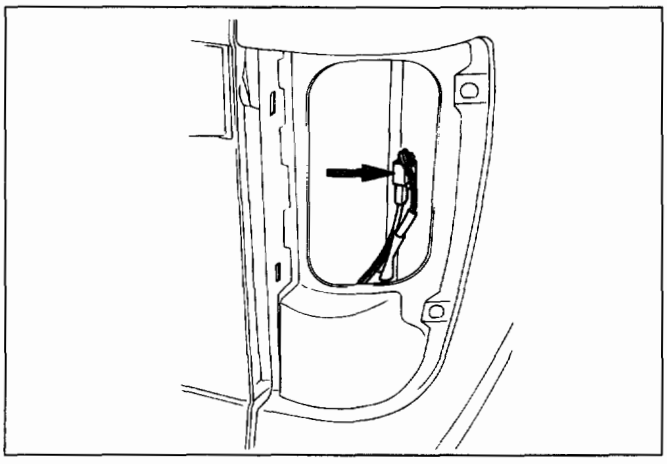

Fig. 10-145

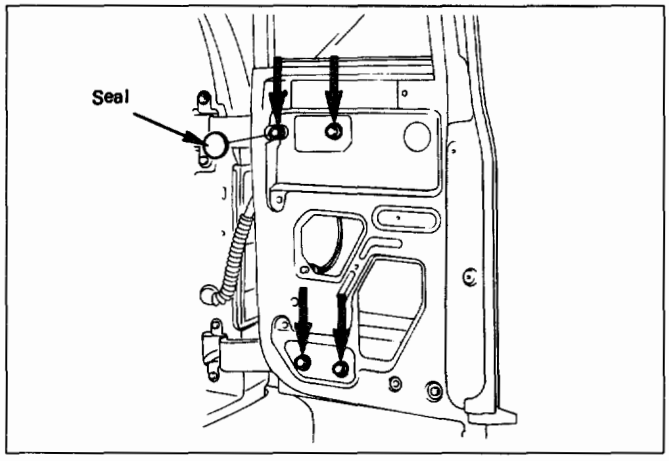

Fig. 10-146

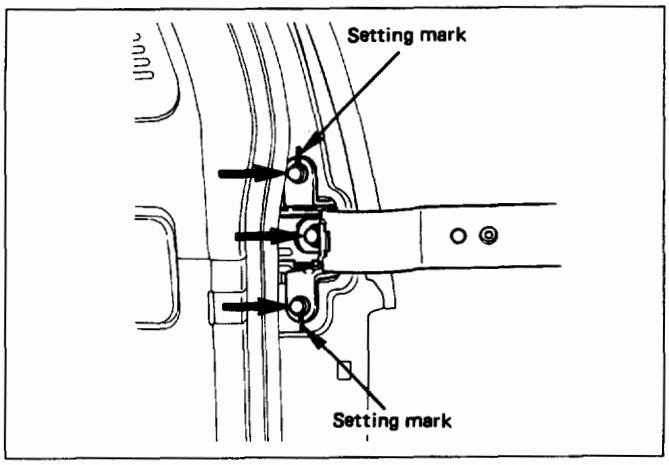

Fig. 10-147

INSTALLATION

To install, follow the removal steps in the reverse order, noting the following point .

1. Apply chassis grease to the tailgate hinge moving surface.
2. Align tailgate fitting to the body by referring to "BODY DIMENSION" in this section.
3. Tighten the hinge bolts to the specified torque.

Torque	N·m (lb·ft)	34 (25)

TAILGATE STRIKERS

ADJUSTMENT (Fig. 10-148)

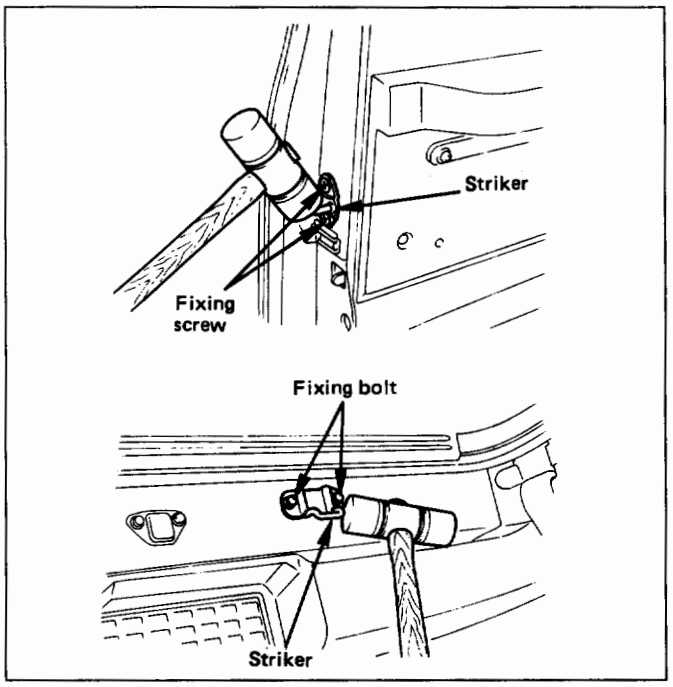

Fig. 10-148

1. Loosen striker screws (or bolts).
2. Tap with plastic hammer to align.
3. Tighten the striker screws (or bolts).

Torque N·m (lb·ft/lb·in)	Screw	15 (11)
	Bolt	12 (104)

TAILGATE TRIM PANEL (LH)

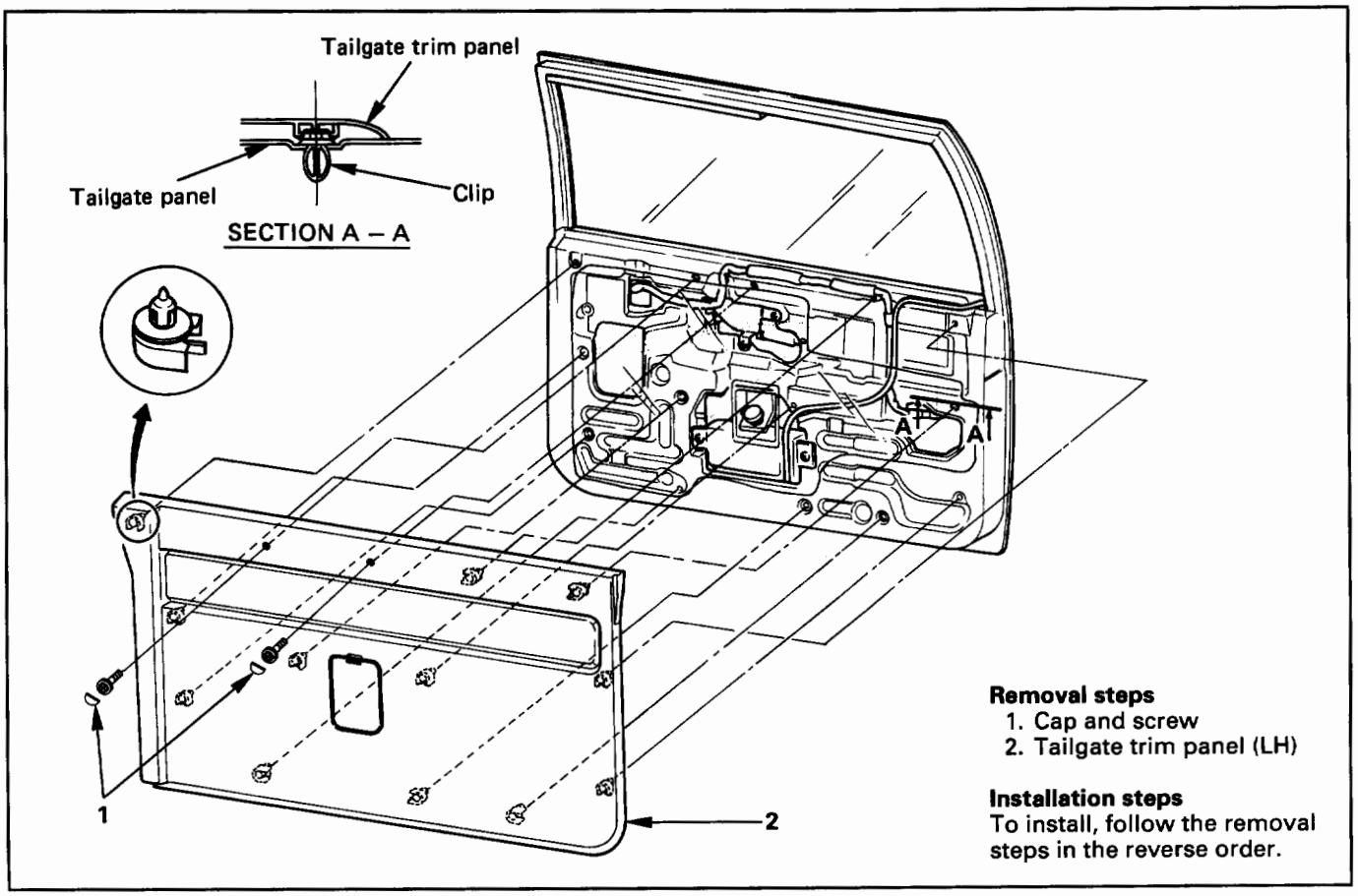

Removal steps
1. Cap and screw
2. Tailgate trim panel (LH)

Installation steps
To install, follow the removal steps in the reverse order.

Fig. 10-149

REMOVAL

Preparation: Disconnect the battery ground cable

1. **Cap and screw**
2. **Tailgate trim panel (LH)**
   - Pry trim panel retainers free from the tailgate panel. (Fig. 10-150)

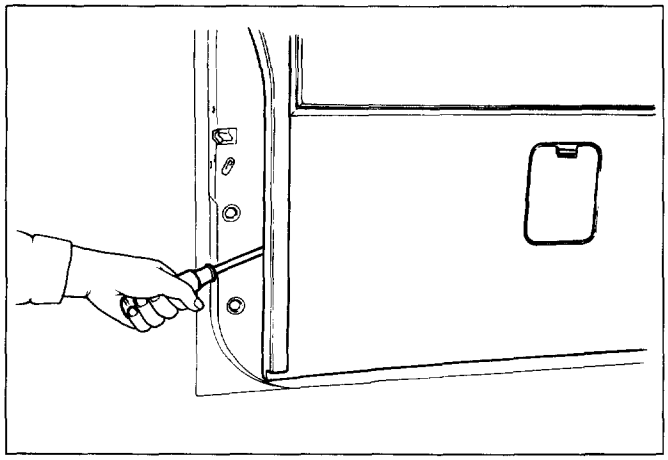

Fig. 10-150

INSTALLATION

To install, follow the removal steps in the reverse order.

TAILGATE TRIM PANEL (RH)

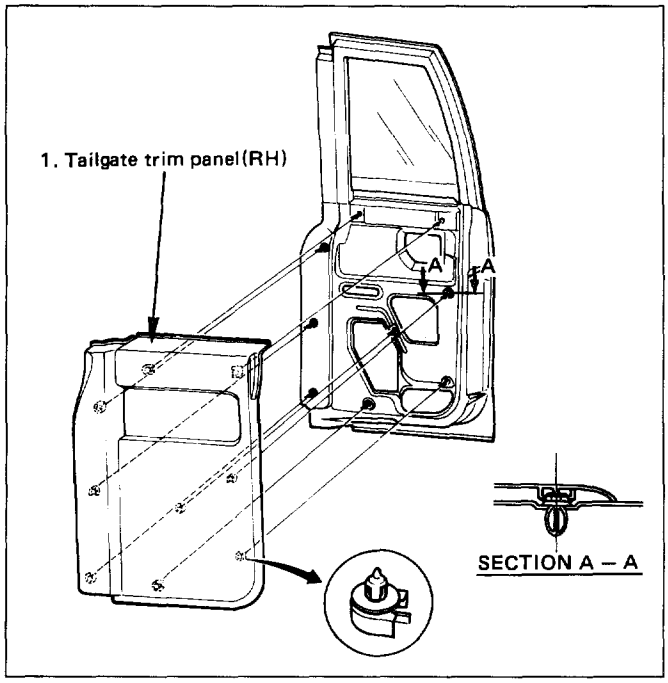

Fig. 10-151

REMOVAL

Preparation: Disconnect the battery ground cable

1. **Tailgate trim panel (RH)**
   - Pry trim panel retainer free from the tailgate panel. (Fig. 10-152)

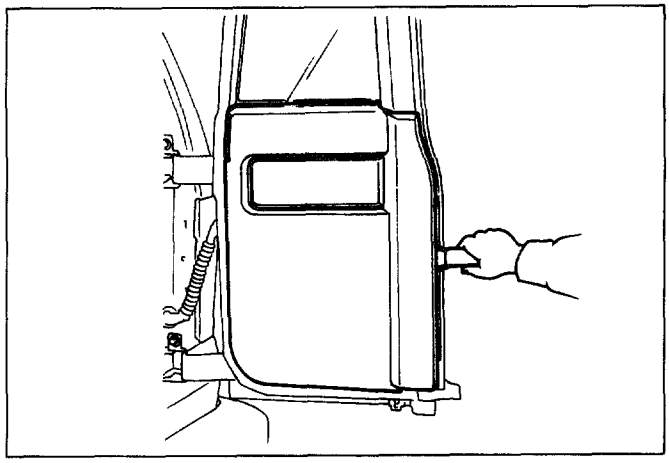

Fig. 10-152

INSTALLATION

1. **Tailgate trim panel (RH)**
   - Insert the retainer of the trim panel into the tailgate panel and fix it securely.

TAILGATE LOCK ASSEMBLY (LH)

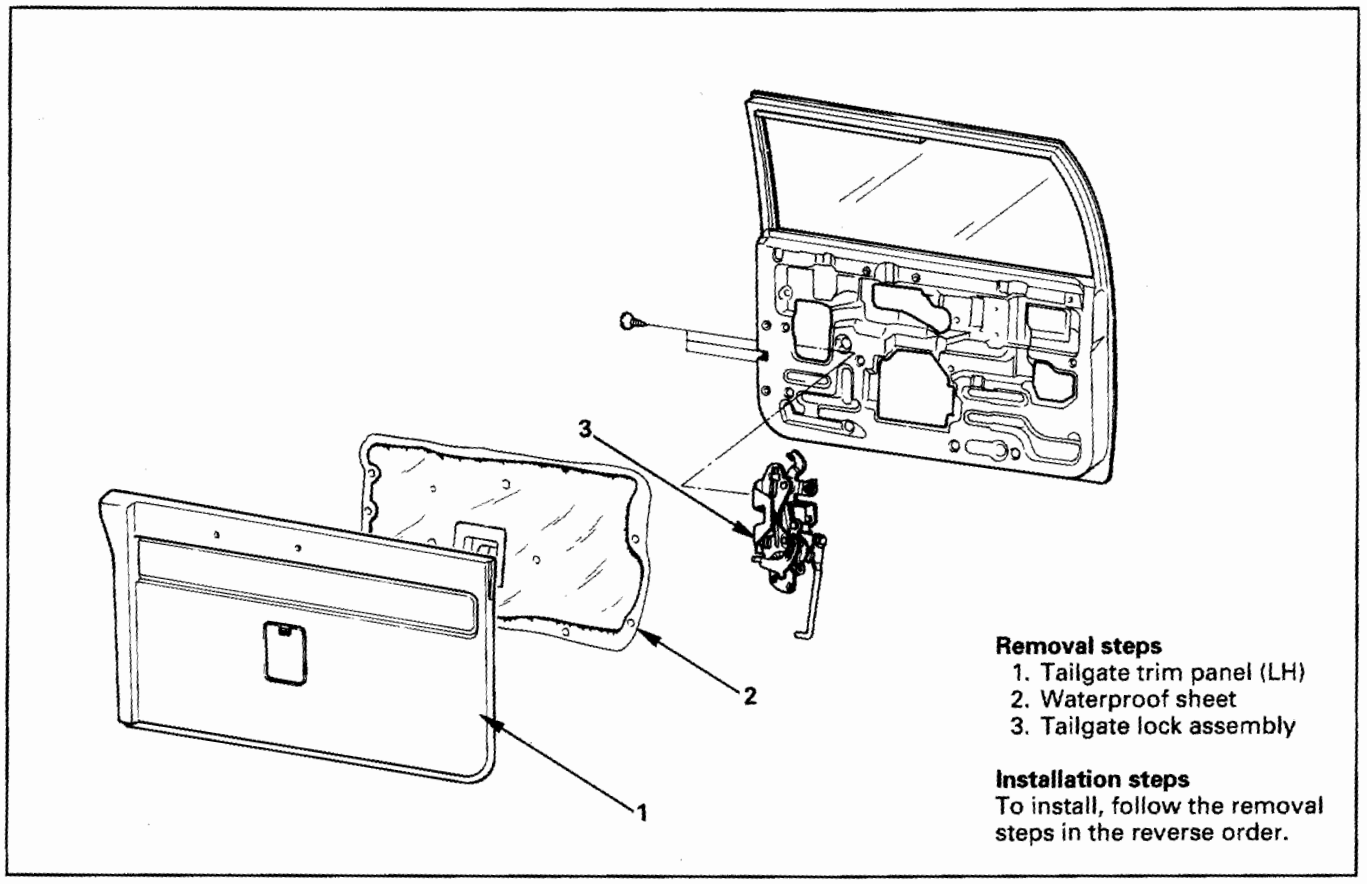

Fig. 10-153

REMOVAL

Preparation: Disconnect the battery ground cable

1. **Tailgate trim panel (LH)**
   - Refer to "TAILGATE TRIM PANEL (LH)" in this section.
2. **Waterproof sheet (Fig. 10-154)**
   - Taking notice of the tailgate harness, peel the water proof sheet off the tailgate panel carefully.

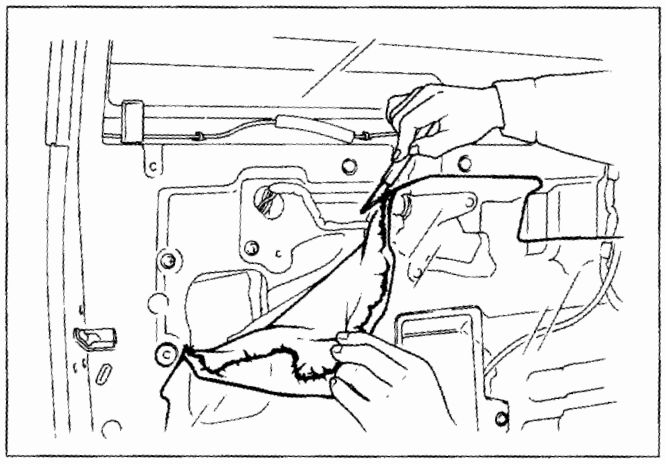

Fig. 10-154

3. **Tailgate lock assembly (LH) (Fig. 10-155)**
   - Disconnect locking links (Arrow marks positions) and remove the 3 fixing screws.

INSTALLATION

To install, follow the removal steps in the reverse order, noting the following points.

1. Apply chassis grease to the lock assembly and striker moving surface.
2. Tighten the door lock fixing screws to the specified torque.

Torque	N·m (lb·in)	8 (69)

3. Check that the tailgate lock operates correctly after installing it.

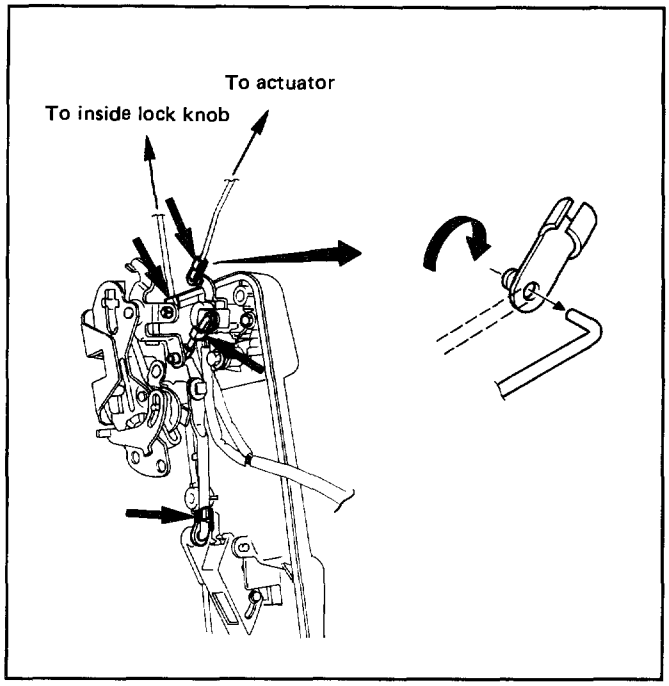

Fig. 10-155

TAILGATE LOCK ASSEMBLY (RH)

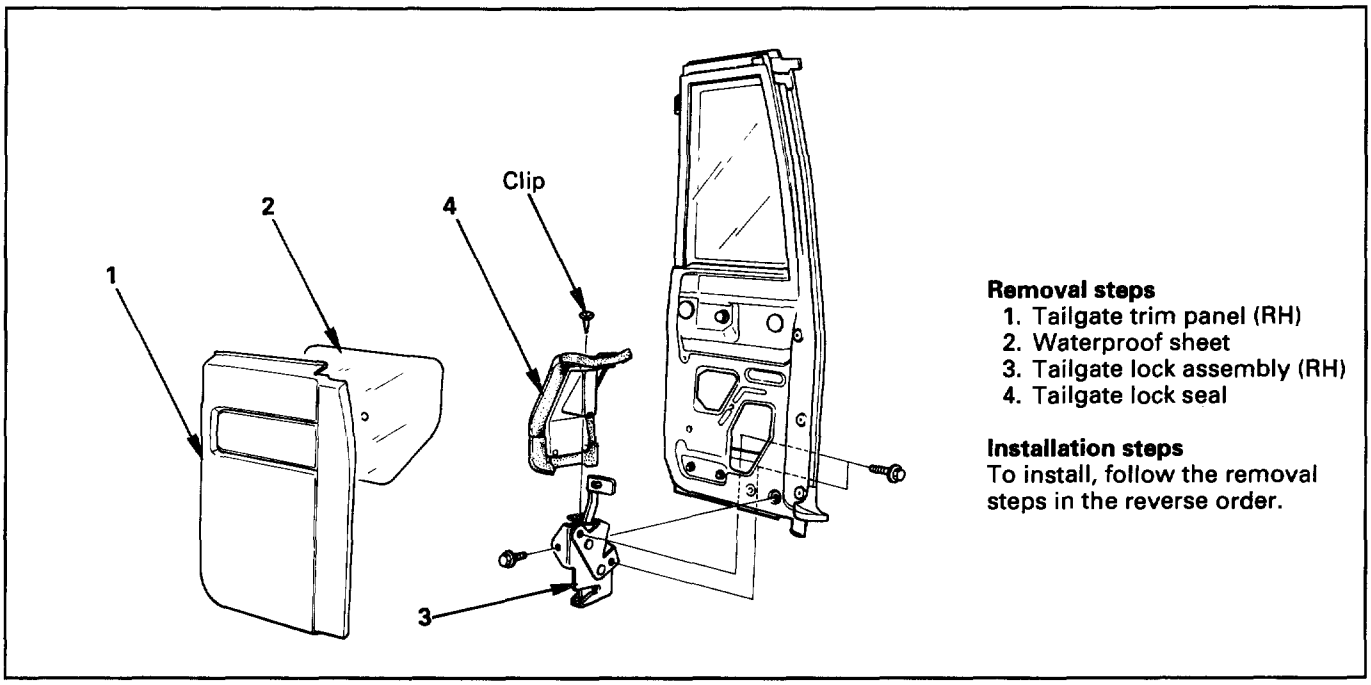

Removal steps
1. Tailgate trim panel (RH)
2. Waterproof sheet
3. Tailgate lock assembly (RH)
4. Tailgate lock seal

Installation steps
To install, follow the removal steps in the reverse order.

Fig. 10-156

REMOVAL

Preparation: Disconnect the battery ground cable

1. **Tailgate trim panel (RH)**
   - Refer to "TAILGATE TRIM PANEL (RH)" in this section.
2. **Waterproof sheet**
   - Peel the water proof sheet off the tailgate panel carefully.
3. **Tailgate lock assembly (RH) (Fig. 10-157)**
   - Remove 3 fixing bolts.
4. **Tailgate lock seal (Fig. 10-158)**
   - Remove seal fixing clip.

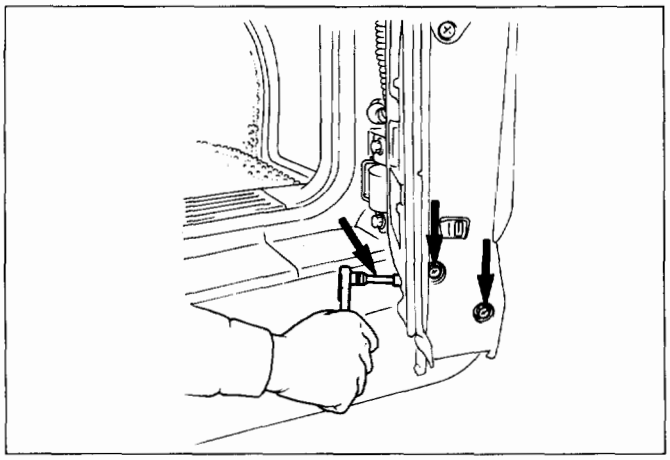

Fig. 10-157

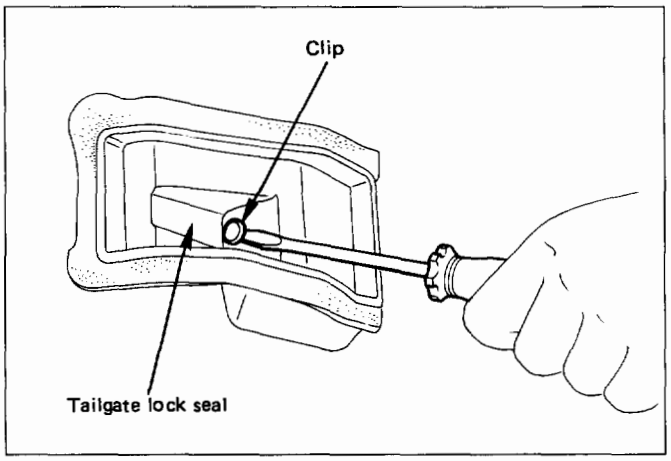

Fig. 10-158

INSTALLATION

To install, follow the removal steps in the reverse order, noting the following points.

1. Apply chassis grease to the lock assembly and striker moving surface.
2. Tighten the tailgate lock fixing bolts to the specified torque.

Torque	N·m (lb·in)	12 (104)

3. Check that the tailgate lock operates correctly after installing it.

TAILGATE INSIDE LOCK KNOB

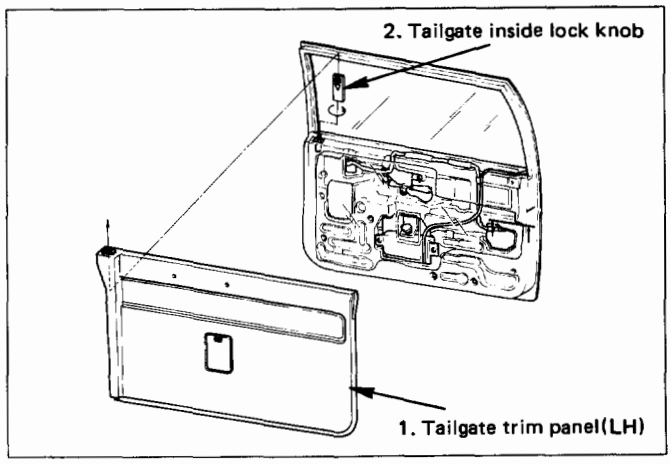

Fig. 10-159

REMOVAL

Preparation: Disconnect the battery ground cable

1. **Tailgate trim panel (LH)**
   - Refer to "TAILGATE TRIM PANEL (LH)" in this section.
2. **Tailgate inside lock knob**
   - Take care of cushion to turn the lock knob counterclockwise.

INSTALLATION

To install, follow the removal steps in the reverse order.

TAILGATE OUTSIDE HANDLE AND/OR TAILGATE LOCK CYLINDER

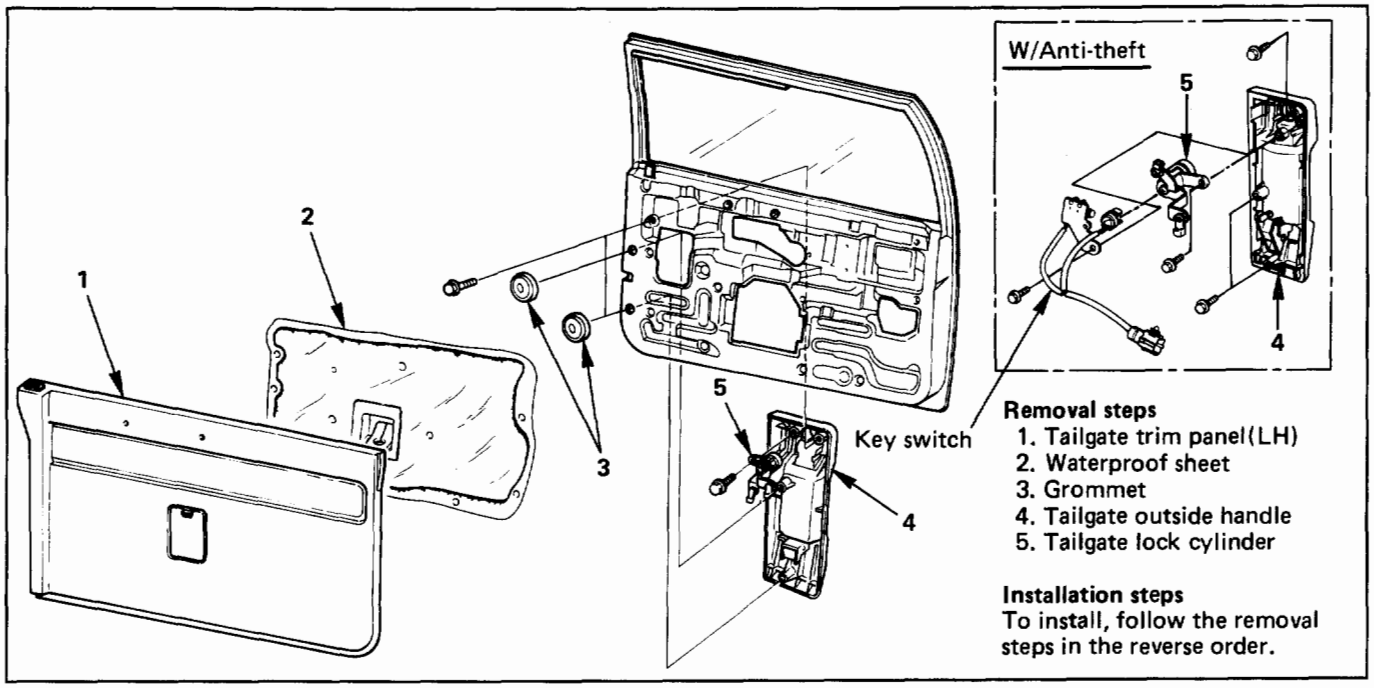

Fig. 10-160

REMOVAL

Preparation: Disconnect the battery ground cable

1. **Tailgate trim panel**
2. **Waterproof sheet**
   - Refer to "TAILGATE LOCK ASSEMBLY (LH)" in this section.
3. **Grommet**
4. **Tailgate outside handle (Fig. 10-161)**
   - Disconnect locking links (Arrow marks positions).
   - Disconnect key switch connector. (W/Anti-theft)
   - Remove 3 fixing bolts.

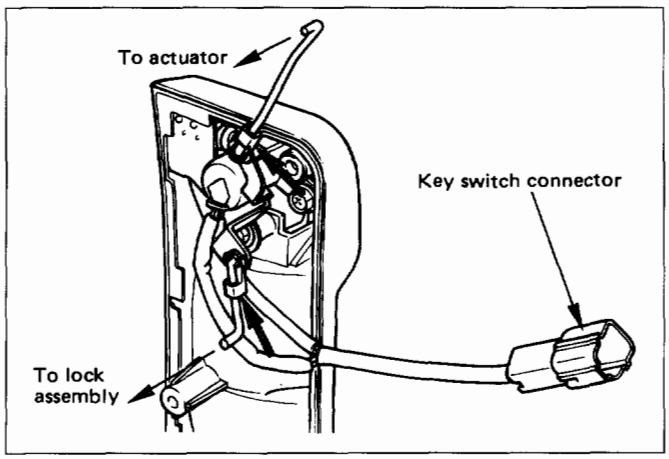

Fig. 10-161

5. **Tailgate lock cylinder (Fig. 10-162)**
   - Remove key switch from lock cylinder (W/Anti-theft)
   - Remove lock cylinder fixing bolt.

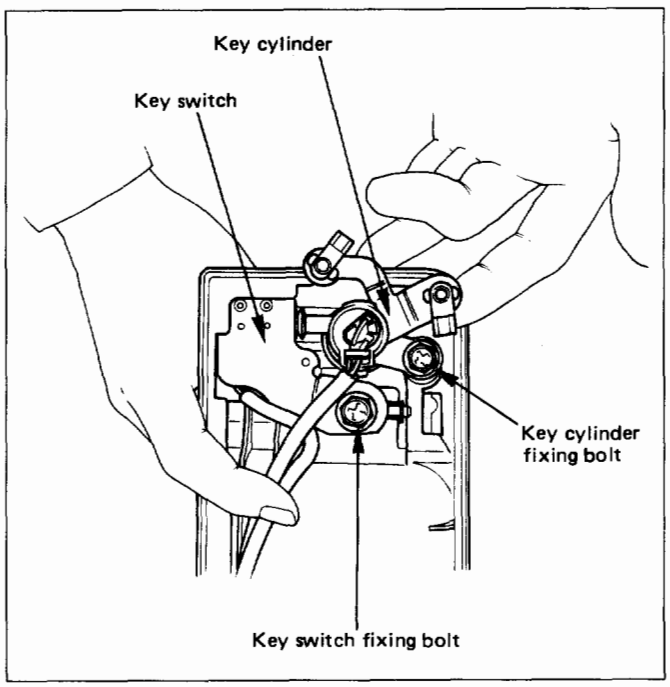

Fig. 10-162

INSTALLATION

To install, follow the removal steps in the reverse order, noting the following points.

1. For the anti-theft system, install the push rod of the key switch to the key cylinder while pressing it so that there is not continuity between the key switch side connector terminals No. G5-2 and G5-4. (Fig. 10-163)
2. Tighten the outside handle and key cylinder fixing bolts to the specified torque.

Torque	N·m (lb·in)	9 (78)

3. Check that the outside handle and key cylinder operate correctly after installing them.

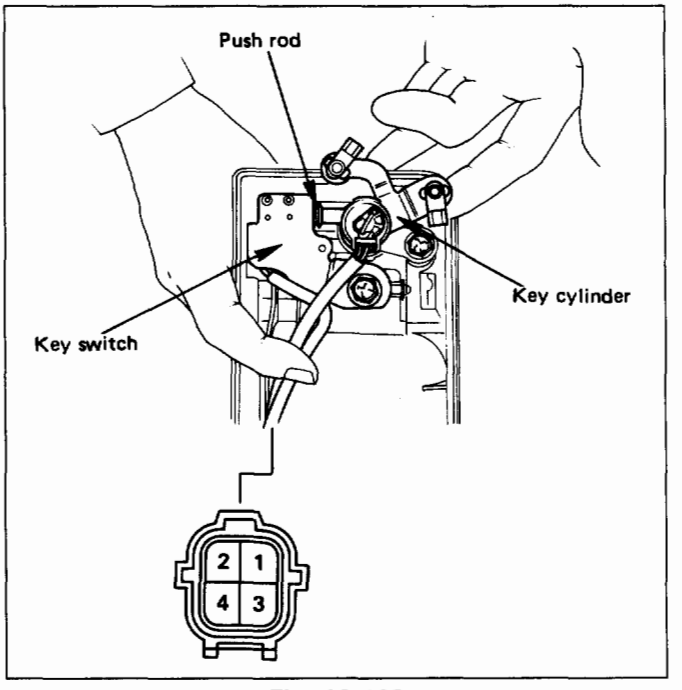

Fig. 10-163

TAILGATE STOPPER ASSEMBLY

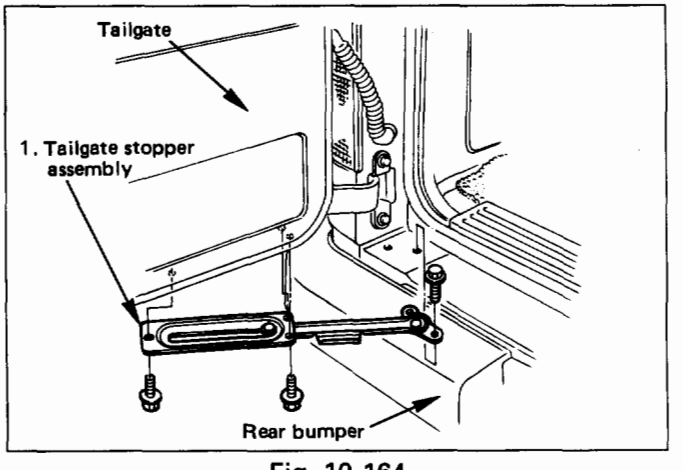

Fig. 10-164

REMOVAL

1. **Tailgate stopper assembly**

INSTALLATION

1. **Tailgate stopper assembly**
   - Tighten the fixing bolts to the specified torque.

Torque	N·m (lb·in)	12 (104)

- Apply chassis grease to the stopper moving surface.

TAILGATE DOVE-TAIL

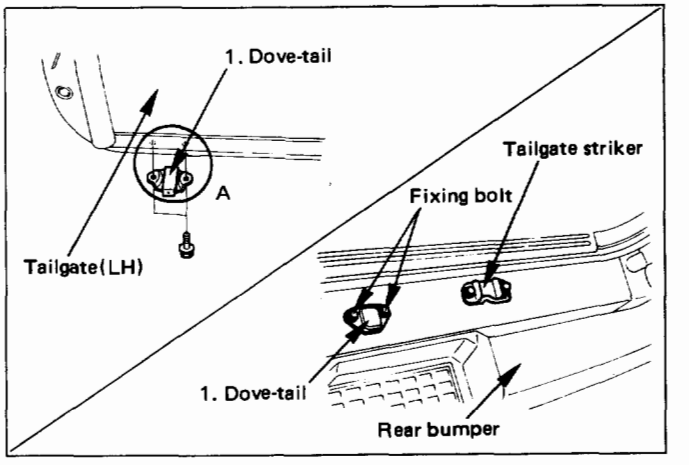

Fig. 10-165

REMOVAL

1. **Tailgate dove-tail**

INSTALLATION

1. **Tailgate dove-tail**
   - Apply chassis grease to the dove-tail (Ⓐ) moving surface.
   - Tighten the fixing bolts to the specified torque.

Torque	N·m (lb·in)	12 (104)

TAILGATE DOVE-TAIL STRIKER

ADJUSTMENT (Fig. 10-166)

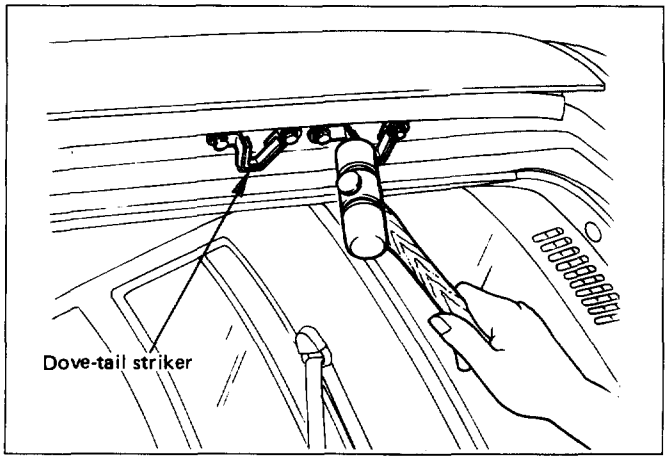

Fig. 10-166

1. Loosen striker bolts.
2. Tap with plastic hammer to align (Fig. 10-167).
3. Tighten striker bolts.

Torque	N·m (lb·in)	12 (104)

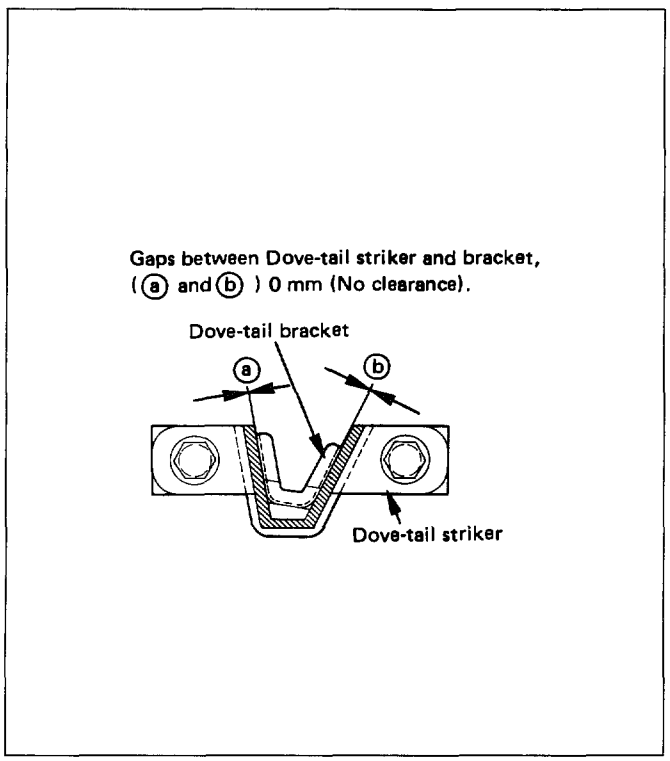

Fig. 10-167

TAILGATE FRAME COVER (LH)

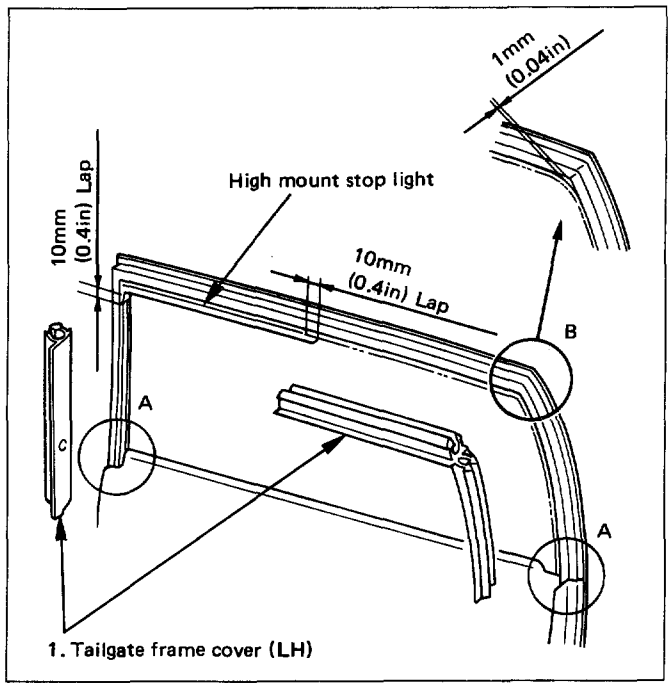

Fig. 10-168

REMOVAL

Preparation: Disconnect the battery ground cable

1. **Tailgate frame cover (Fig. 10-169)**
   - Pull the tailgate frame cover out.
   - Disconnect the washer tube at the nozzle and pull the washer tube out from the frame cover.
   - Disconnect the rear defogger and pull the harness from the cover.

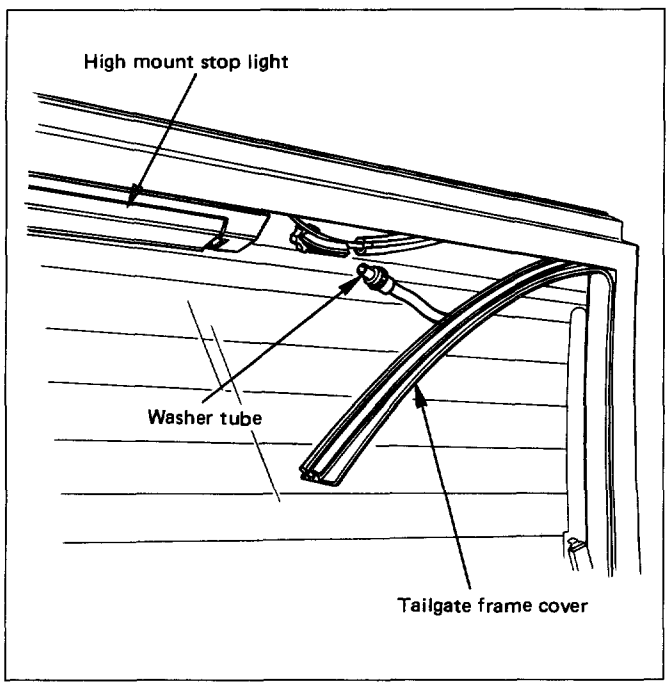

Fig. 10-169

INSTALLATION

1. **Tailgate frame cover**
   - Hit the lower Ⓐ edge portion of the cover to the tailgate flange.(Fig. 10-169)
   - Clearance between the frame cover and the tailgate panel (Ⓑ portion) is 1 mm (0.4 in).

TAILGATE FRAME COVER (RH)

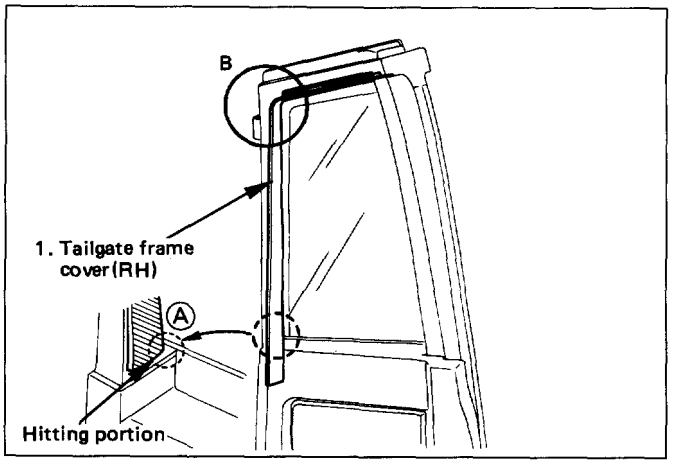

Fig. 10-170

REMOVAL

1. **Tailgate frame cover (RH) (Fig. 10-171)**
   - Pull the frame cover out from tailgate frame.

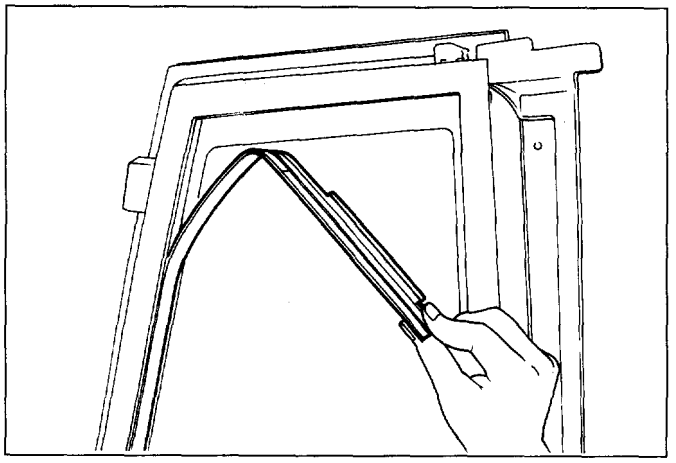

Fig. 10-171

INSTALLATION

1. **Tailgate frame cover**
   - Hit the lower Ⓐ edge portion of the cover, to install the tailgate. (Fig. 10-170)
   - Clearance between frame cover and the tailgate panel (Ⓑ portion) is 1 mm (0.04 in).

TAILGATE SASH TRIM COVER

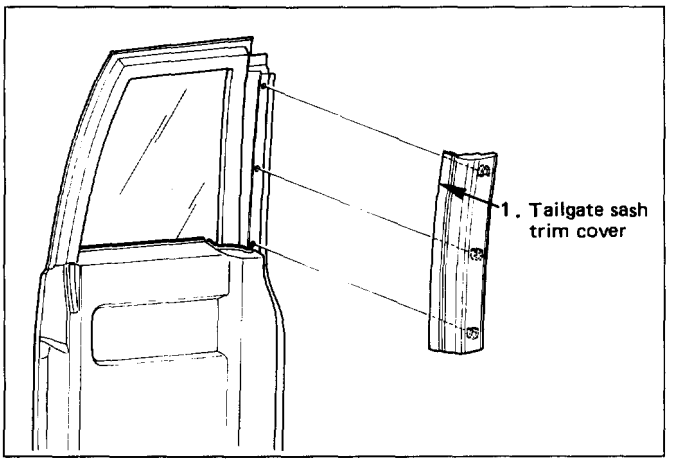

Fig. 10-172

REMOVAL

1. **Tailgate sash trim cover**
   - Pry trim cover retainers free from the tailgate panel. (Fig. 10-173)

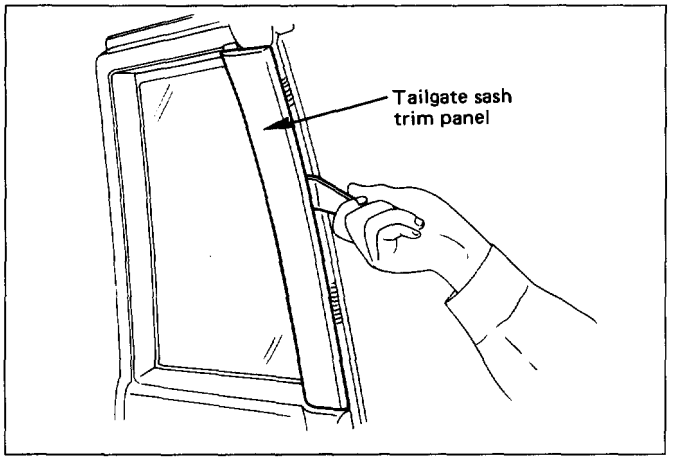

Fig. 10-173

INSTALLATION

1. **Tailgate sash trim cover**
   - Insert the trim cover retainers into the tailgate hole securely, so there are no gaps between them.

TAILGATE OUTER WEATHERSTRIP

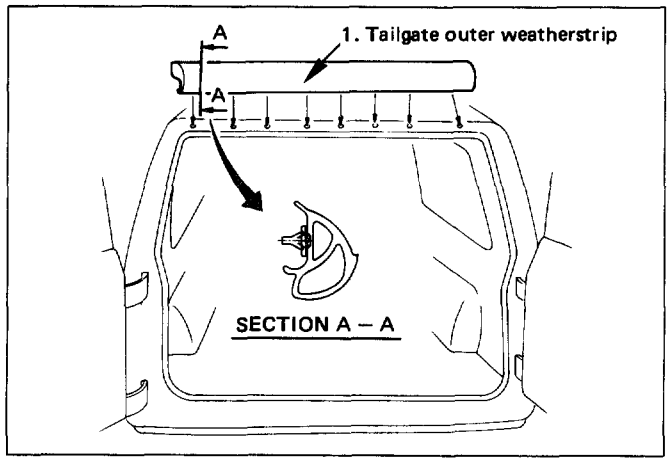

Fig. 10-174

REMOVAL

Preparation: Battery ground cable

1. **Tailgate outer weatherstrip**
   - Pry weatherstrip clips free from the body panel. (Fig. 10-175)

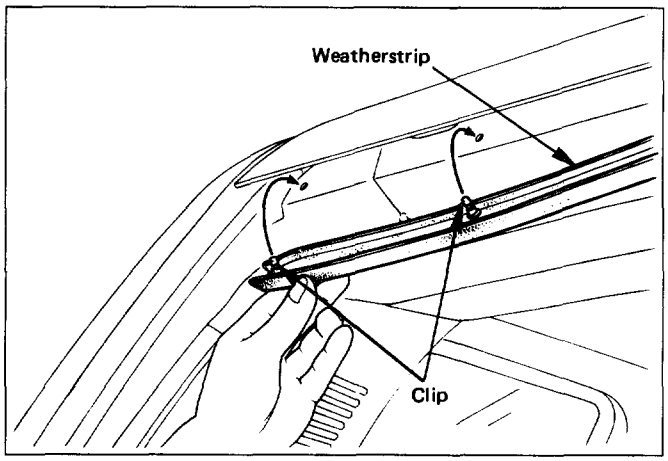

Fig. 10-175

INSTALLATION

1. **Tailgate outer weatherstrip**
   - Insert the weatherstrip clip into the body panel hole securely to install the tailgate outer weatherstrip with gap between the body panel and the weatherstrip.

TAILGATE CENTER WEATHERSTRIP

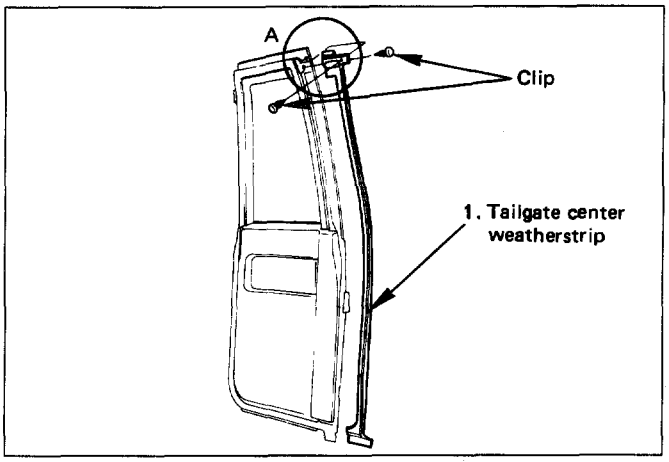

Fig. 10-176

REMOVAL

1. **Tailgate center weatherstrip**
   - Remove the fixing clips and pull the weatherstrip out from tailgate panel.

INSTALLATION

1. **Tailgate center weatherstrip**
   - Start assembling at the Ⓐ portion. (Fig. 10-176)
   - Clean the weatherstrip adhesive tape and butyl seal fitting positions of the tailgate panel.
   - Affix new adhesive tape and butyl seal to the weatherstrip (lower side), to install the tailgate center weatherstrip to the tailgate panel with no gap between them. (Fig. 10-177)

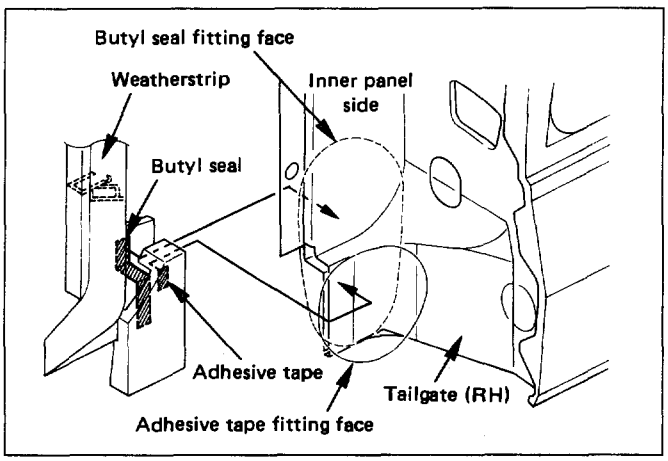

Fig. 10-176

TAILGATE MAIN WEATHERSTRIP

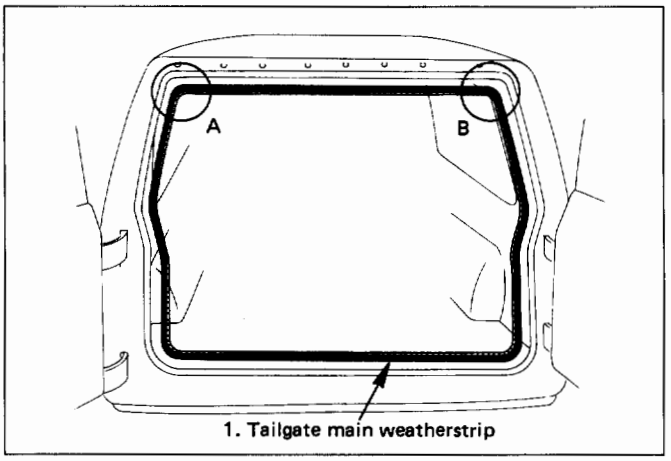

Fig. 10-178

REMOVAL

1. **Tailgate main weatherstrip**
   - Pull the weatherstrip out from body panel.

INSTALLATION

1. **Tailgate main weatherstrip**
   - Align the Ⓐ and Ⓑ positions to the corners of the body panel, and install the tailgate main weatherstrip with no clearance left between them while tapping gently it with a plastic hammer.

SPARE TIRE CARRIER

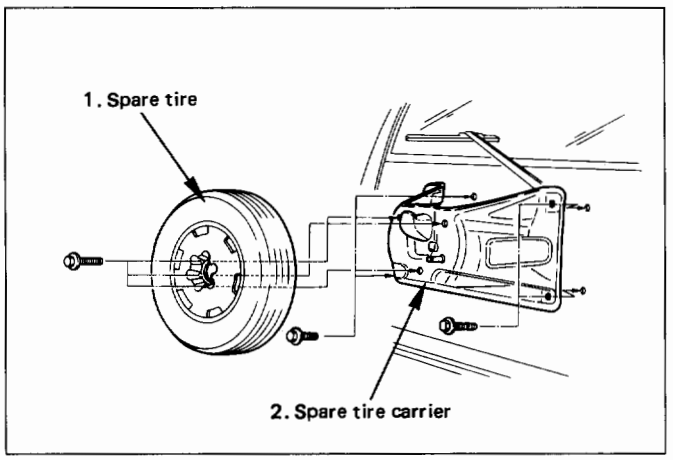

Fig. 10-179

REMOVAL

1. **Spare tire**
2. **Spare tire carrier**
   - Spare tire carrier nut wrench: J-34355 (Fig. 10-180)

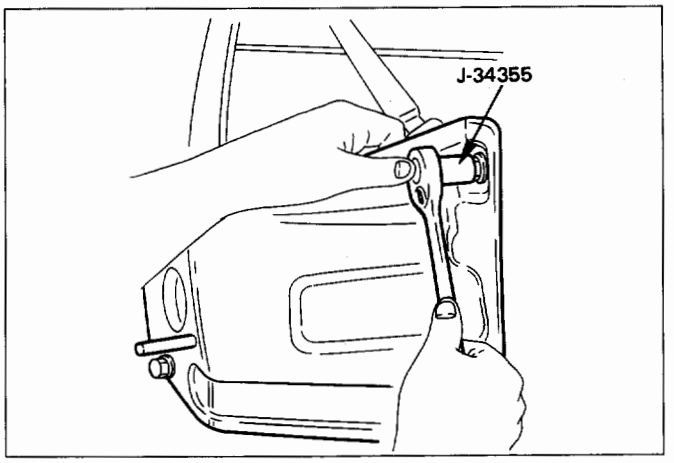

Fig. 10-180

INSTALLATION

2. **Spare tire carrier**
   - Tighten the carrier fixing bolts to the specified torque.

Torque	N·m (lb·ft)	31 (23)

1. **Spare tire**
   - Tighten the spare tire fixing bolts to the specified torque.

Torque	N·m (lb·ft)	118 (87)

SEATS

FRONT SEAT ASSEMBLY

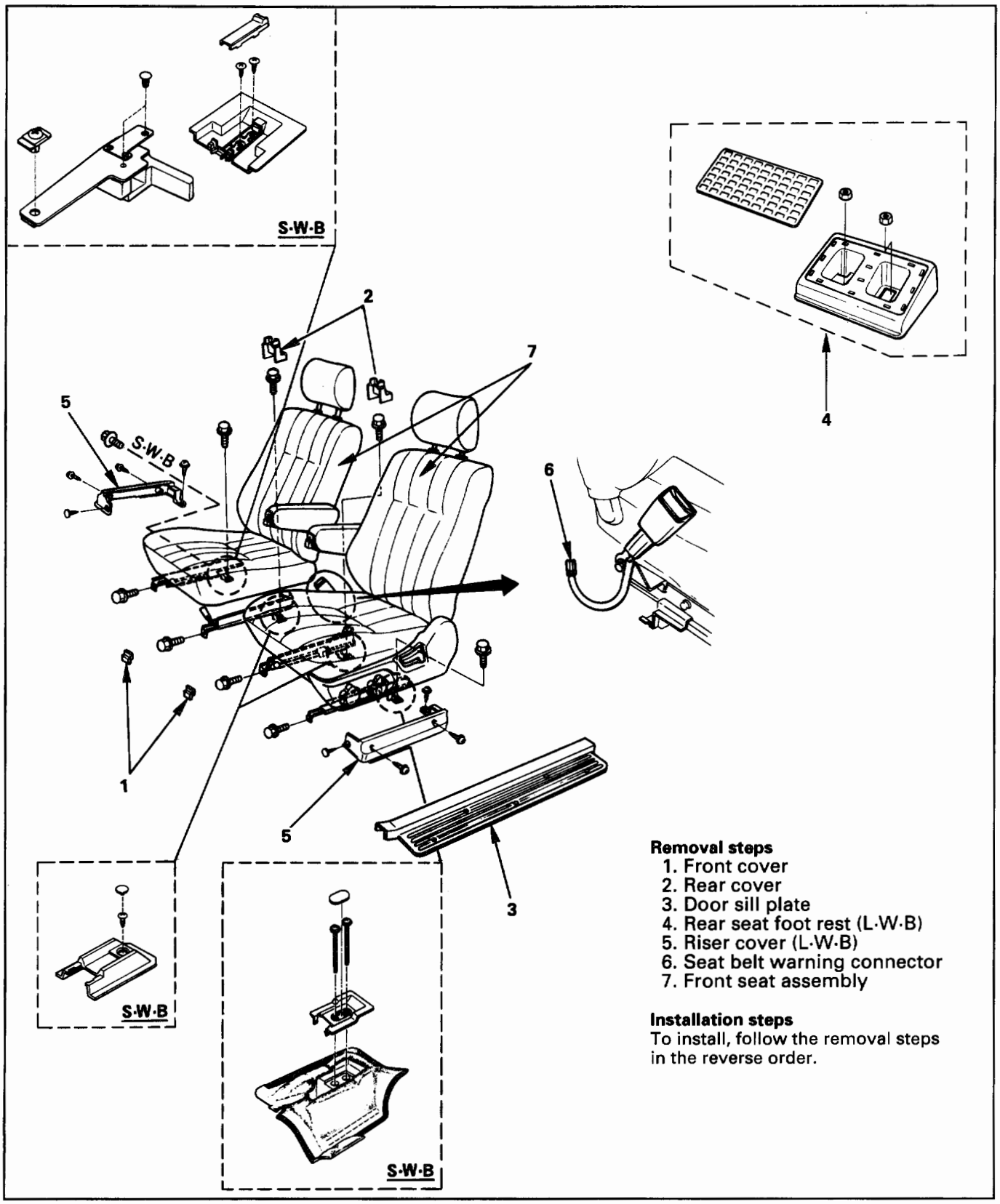

Removal steps
1. Front cover
2. Rear cover
3. Door sill plate
4. Rear seat foot rest (L·W·B)
5. Riser cover (L·W·B)
6. Seat belt warning connector
7. Front seat assembly

Installation steps
To install, follow the removal steps in the reverse order.

Fig. 10-181

REMOVAL

Preparation: Disconnect the battery ground cable

1. **Front cover**
2. **Rear cover**
   - Remove the cover fixing screw from the rear inner cover (W/Power seat)
3. **Door sill plate**
4. **Rear seat foot rest (L·W·B)**
   - Refer to "REAR SEAT FOOT REST" in this section.
5. **Riser cover (L·W·B)**
6. **Seat belt warning connector (Driver's side only)**
7. **Front seat assembly**
   - Disconnect the power seat connector (W/Power seat)

INSTALLATION

To install, follow the removal steps in the reverse order, noting the following point.

1. Tighten the front seat assembly fixing bolts to the specified torque.

Torque	N·m (lb·ft)	40 (30)

2. The longest bolt is installed to the rear inner side fixing location (W/Power seat)

DISASSEMBLY (Fig. 10-182)

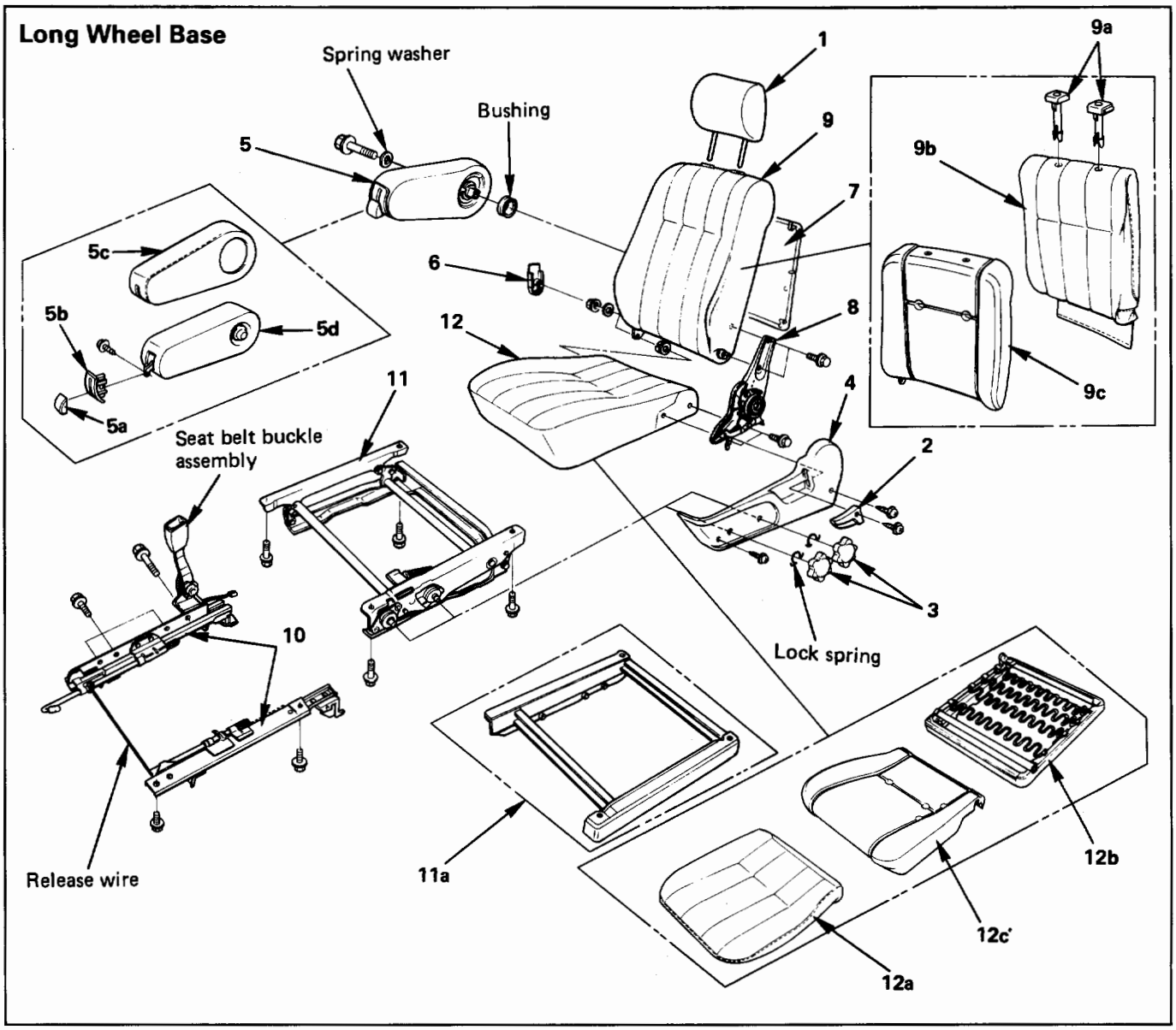

Fig. 10-182

1. **Head rest**
2. **Reclining knob**
3. **Dial (W/Height adjuster)**
   - Remove the side cover fixing screws and dial lock spring (Fig. 10-183)
4. **Side cover**
5. **Armrest assembly**
   - Open the armrest fastener and remove the fixing bolt (Fig. 10-184)

5a. **Knob**
   - Remove the knob fixing screw.

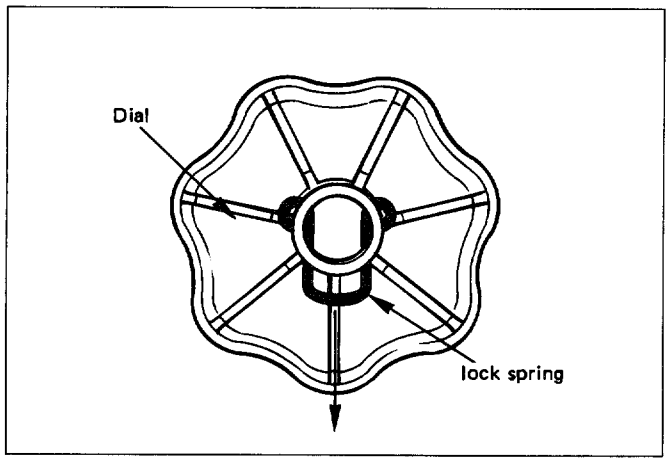

Fig. 10-183

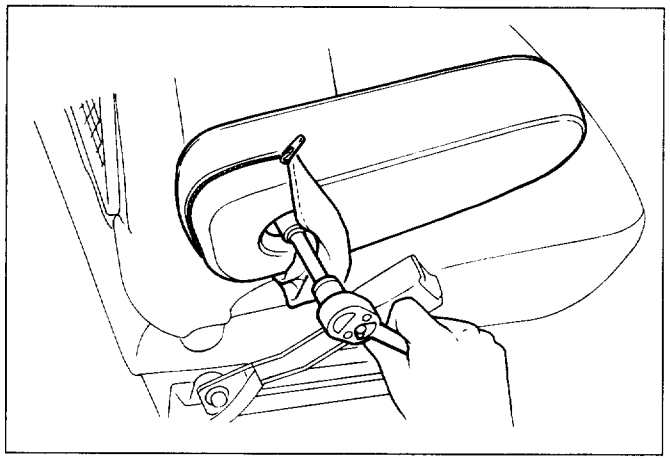

Fig. 10-184

5b. **Bezel**
   - Pull the bezel out from armrest assembly.

5c. **Trim cover**

5d. **Pad & frame assembly**

6. **Hinge cover**
7. **Back board assembly**
   - Pull out the back board while prying the clip of the back board free from the seat back assembly. (Fig. 10-185)

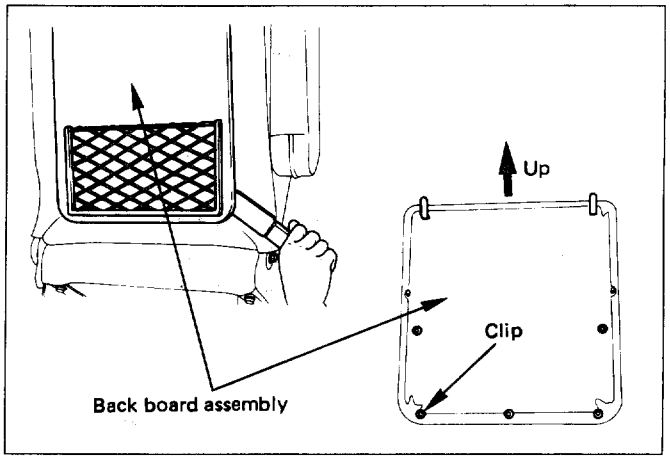

Fig. 10-185

8. **Reclining device**
   - Turn up the seat back trim cover to remove the reclining device fixing bolts (Fig. 10-186).

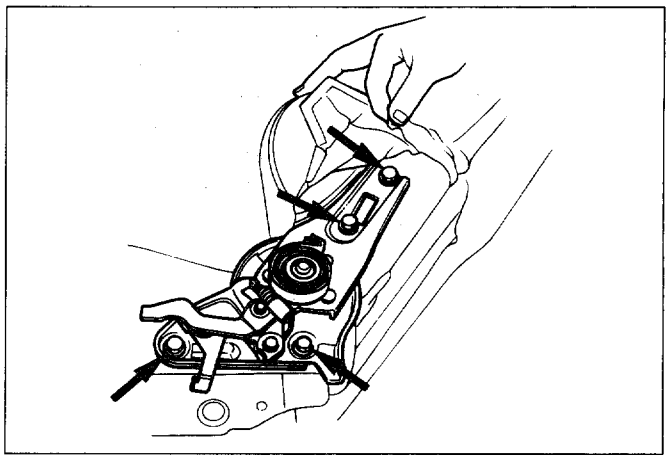

Fig. 10-186

9. **Seat back assembly**
   - Remove the seat back assembly fixing nut on the opposite side of the reclining device (Fig. 10-187).

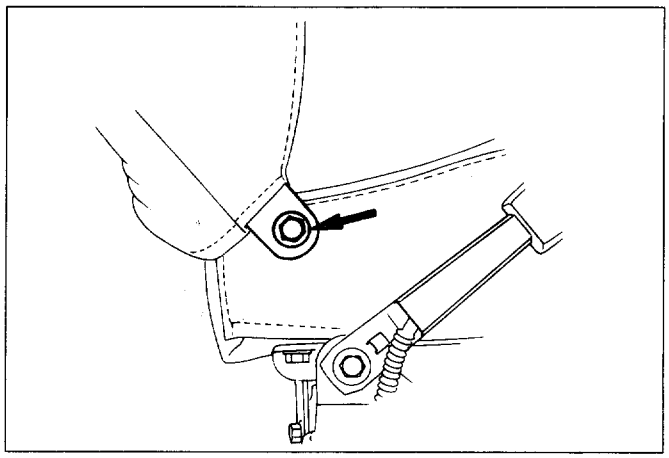

Fig. 10-187

9a. Guide holder
- Pull the guide holder out from the seat back assembly.

9b. Trim cover
- Remove the trim cover hog rings from the back side of seat back.
- With close attention paid to the hog rings and wire which connect the trim cover and the pad and frame assembly, remove the trim cover while turning it up.

9c. Pad & frame assembly

10. Seat adjuster
- Disconnect the release wire and remove the fixing bolts (Fig. 10-188).
- Remove the seat belt buckle assembly.

11. Height adjuster

11a. Spacer (W/O Height adjuster)

12. Seat cushion assembly

12a. Trim cover
- Remove the trim cover hog rings from the back side of the seat cushion assembly.
- With close attention paid to the hog rings and wire which connect the trim cover and the pad and frame assembly, remove the trim cover while turning it up.

12b. Frame assembly

12c. Pad assembly

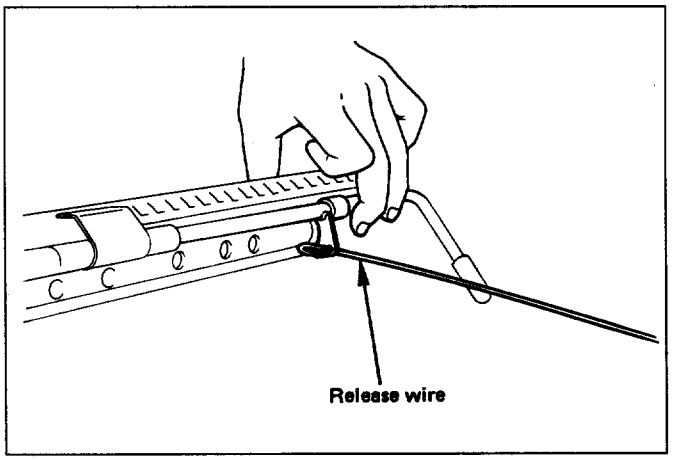

Fig. 10-188

REASSEMBLY

To reassembly, follow the disassembly steps in the reverse order, noting the following point.

1. Tighten the fixing bolts to the specified torque.
   - Refer to "TORQUE SPECIFICATIONS" in this section.

DISASSEMBLY (Fig. 10-189)

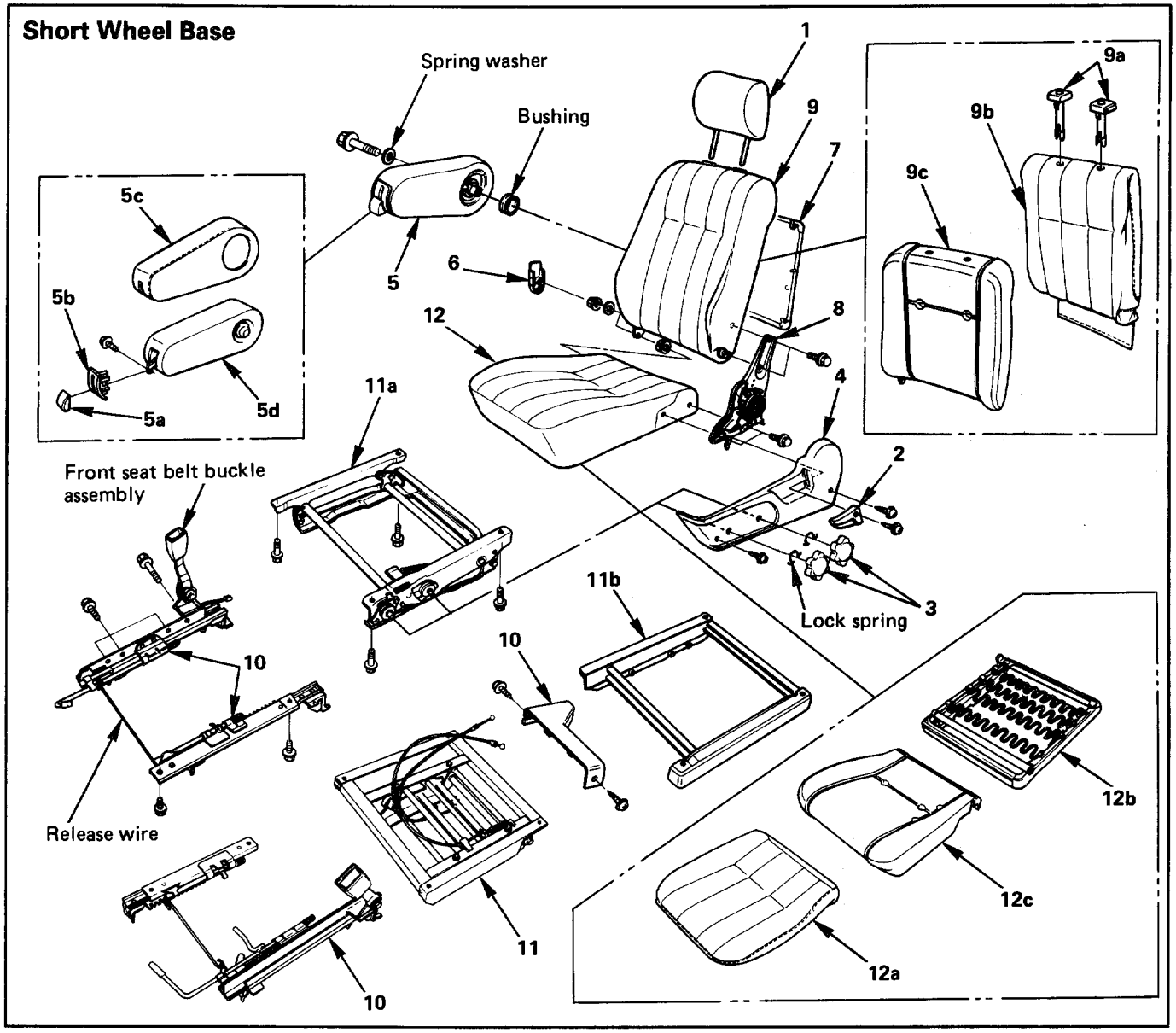

Fig. 10-189

1. **Head rest**
2. **Reclining knob**
3. **Dial (W/Height adjuster)**
   - Remove the side cover fixing screws and dial lock spring (Fig. 10-190)
4. **Side cover**
5. **Armrest assembly**
   - Open the armrest fastener and remove the fixing bolt (Fig. 10-191)

5a. **Knob**
   - Remove the knob fixing screw.

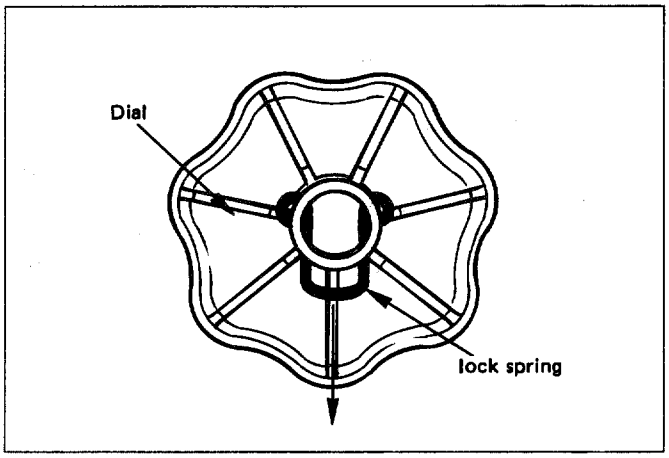

Fig. 10-190

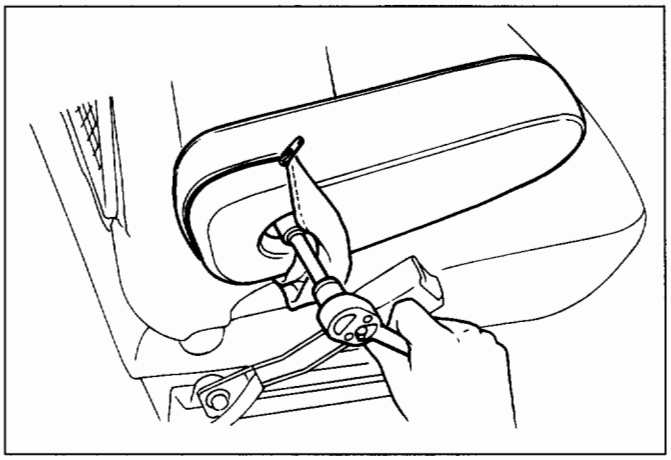

Fig. 10-191

5b. Bezel

- Pull the bezel out from armrest assembly.

5c. Trim cover

5d. Pad & frame assembly

6. Hinge cover

7. Back board assembly

- Pull out the back board while prying the clip of the back board free from the seat back assembly. (Fig. 10-192)

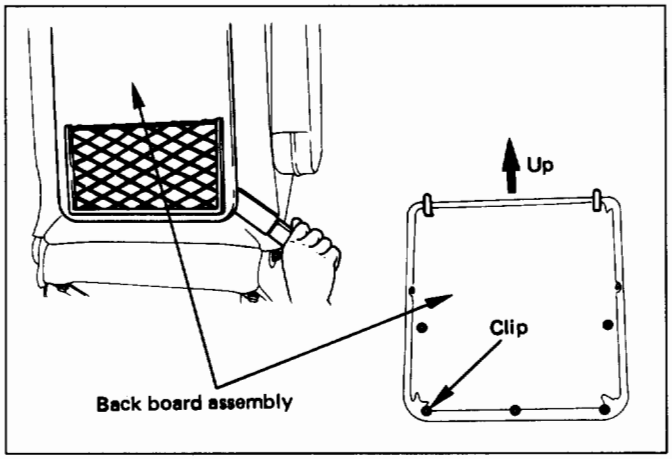

Fig. 10-192

8. Reclining device

- Turn up the seat back trim cover to remove the reclining device fixing bolts (Fig. 10-193).

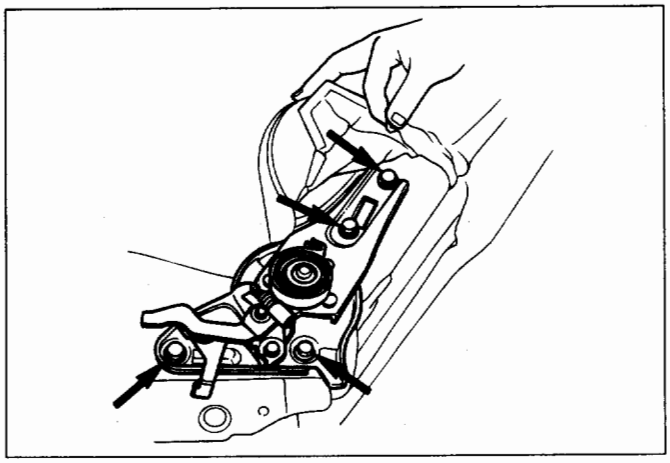

Fig. 10-193

- Remove the push nut and disconnect the walk-in cable from the reclining device. (Fig. 10-194)

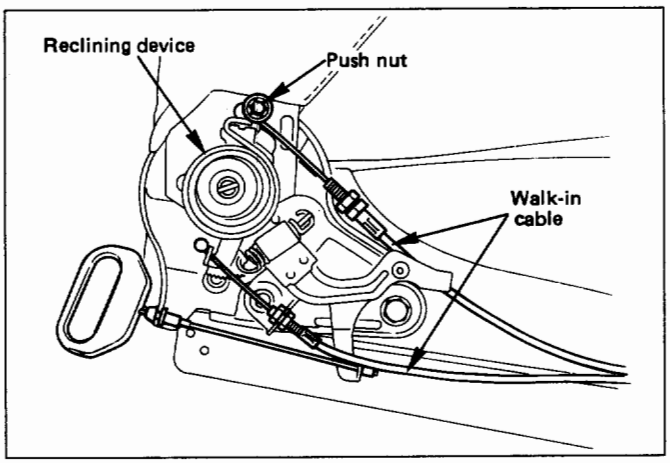

Fig. 10-194

9. Seat back assembly

- Remove the seat back assembly fixing nut on the opposite side of the reclining device (Fig. 10-195).

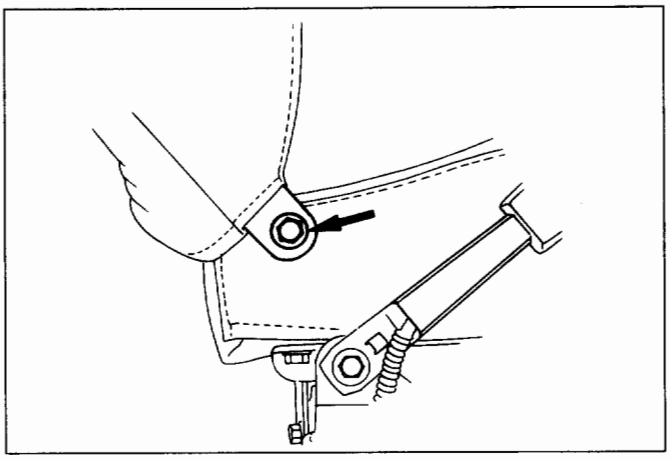

Fig. 10-195

9a. Guide holder
- Pull the guide holder out from the seat back assembly.

9b. Trim cover
- Remove the trim cover hog rings from the back side of seat back.
- With close attention paid to the hog rings and wire which connect the trim cover and the pad and frame assembly, remove the trim cover while turning it up.

9c. Pad & frame assembly

10. Seat adjuster
- Disconnect the release wire and remove the fixing bolts (Fig. 10-196).
- Remove the seat belt buckle assembly.

11. Walk-in assembly

11a. Height adjuster

11b. Spacer (W/O Height adjuster)

12. Seat cushion assembly

12a. Trim cover
- Remove the trim cover hog rings from the back side of the seat cushion assembly.
- With close attention paid to the hog rings and wire which connect the trim cover and the pad and frame assembly, remove the trim cover while turning it up.

12b. Frame assembly

12c. Pad assembly

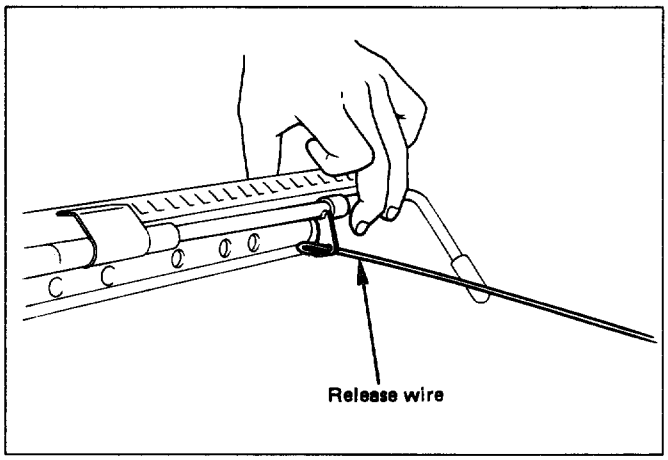

Fig. 10-196

REASSEMBLY

To reassembly, follow the disassembly steps in the reverse order, noting the following point.

1. Tighten the fixing bolts to the specified torque.
   - Refer to "TORQUE SPECIFICATIONS" in this section.

DISASSEMBLY

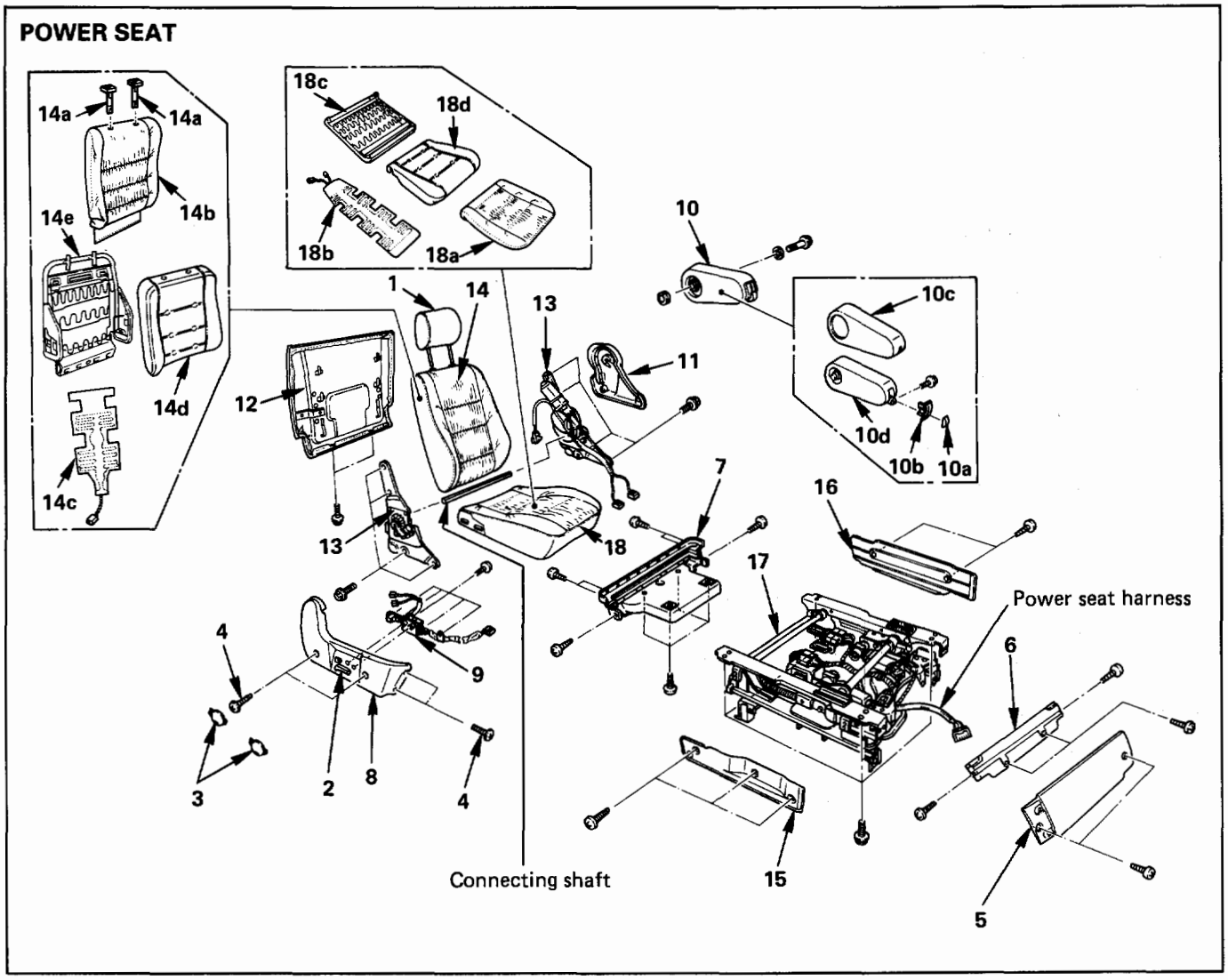

Fig. 10-197

1. **Head rest**
2. **Switch knob**
   - Pull the switch knob out.
3. **Outer cover cap**
4. **Outer cover fixing screws**
   - Pull up the outer cover to remove the cover from the reclining device (Fig. 10-198).

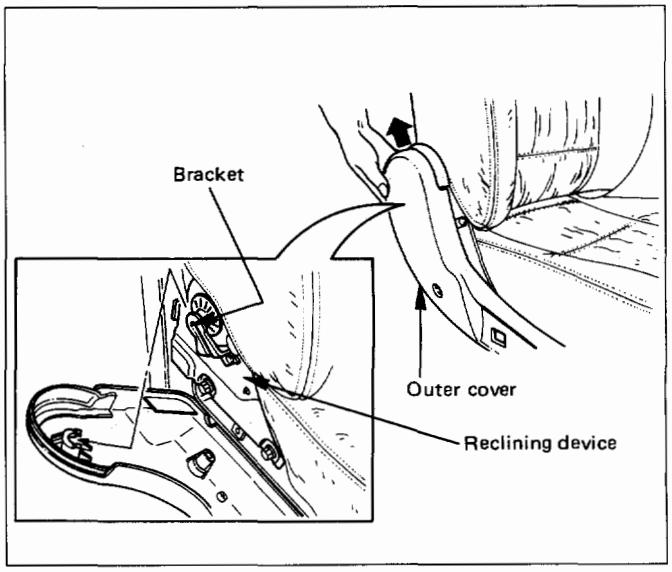

Fig. 10-198

5. **Front cover**
6. **Front lower cover**
7. **Rear cover**
8. **Outer cover**
   - Disconnect the switch connectors and remove the harness fixing clips.
9. **Switch assembly**
   - Remove the switch fixing screws from the outer cover.
10. **Armrest assembly**
   - Open the armrest fastener and remove the fixing bolt (Fig. 10-199).

10a. Knob
   - Remove the knob fixing screws.

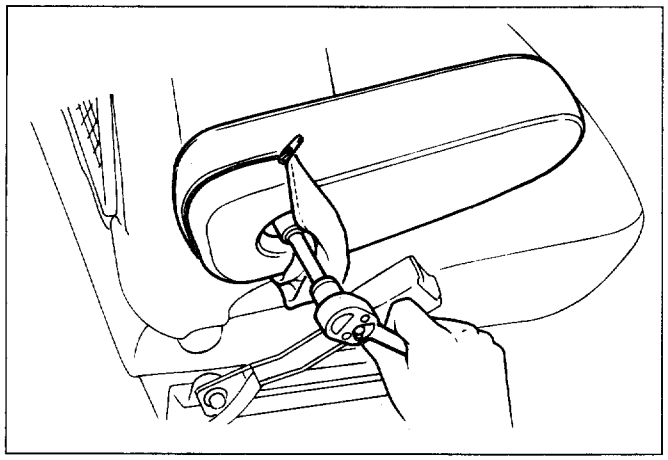

Fig. 10-199

10b. Bezel
   - Pull the bezel out from armrest assembly.

10c. Trim cover

10d. Pad & frame assembly

11. **Inner cover**
   - Remove the cover fixing screw.
   - Pull up the inner cover to remove the cover from the reclining device (Fig. 10-198).
12. **Back board assembly (Fig. 10-200)**
   - Remove the board fixing screws.
   - Pull the back board downward and remove the board from the seat back frame.

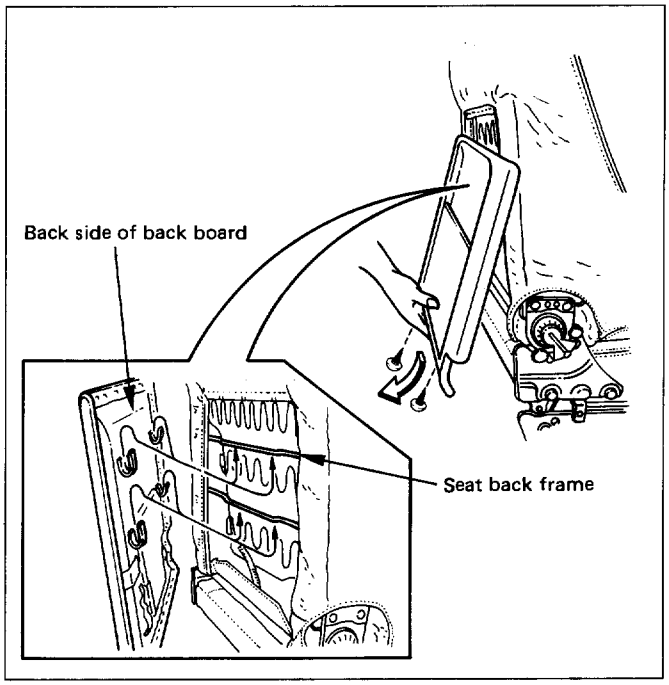

Fig. 10-200

13. **Reclining device (Fig. 10-201)**
   - Remove the device lower side fixing bolt to separate the seat back and seat cushion.
   - Disconnect the seat heater connector.
   - Remove the trim cover hog rings from the back side of the seat back assembly.
   - Turn up the seat back trim cover to remove the device upper side fixing bolt.
   - Disconnect the connecting shaft and device connectors.

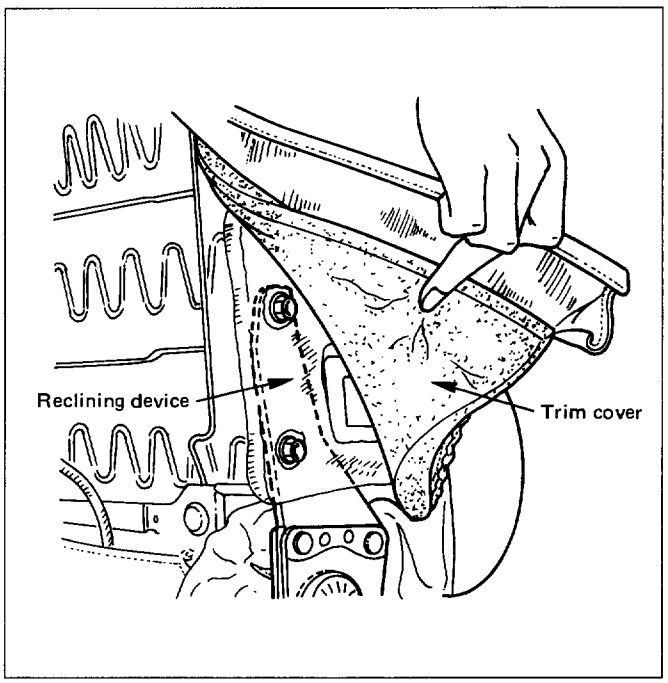

Fig. 10-201

14. Seat back assembly

14a. Guide holder (Fig. 10-202)

- Remove the trim cover fixing hog rings from the back side of the seat back assembly.
- Hold the tip end of the guide holder and pull the holder out from the seat back assembly.

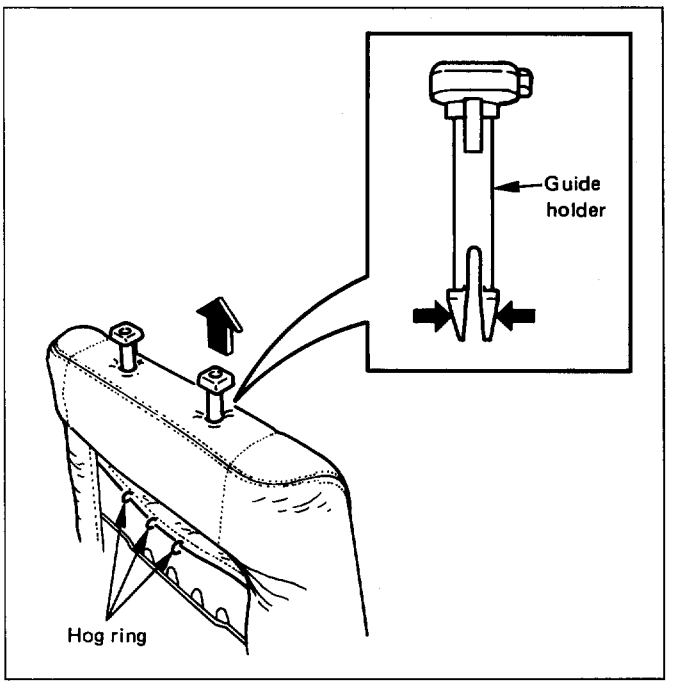

Fig. 10-202

14b. Trim cover

- Remove the trim cover hog rings from the back side of the seat back.
- With close attention paid to the hog rings and wire which connect the trim cover and pad & frame assembly, remove the trim cover while turning it up.

14c. Seat heater

14d. Pad assembly

14e. Frame assembly

15. Outer lower cover

16. Inner lower cover

17. Adjuster assembly

- Disconnect the connectors and remove the fixing bolts.
- Remove the power seat harness from the adjuster assembly.

18. Seat cushion assembly

18a. Trim cover

- Remove the trim cover hog rings from the back side of the seat cushion assembly.
- With close attention paid to the hog rings and wire which connect the trim cover and pad & frame assembly, remove the trim cover while turning it up.

18b. Seat heater

18c. Frame assembly

18d. Pad assembly

REASSEMBLY

To reassembly, follow the disassembly steps in the reverse order, noting the following point;

1. Tighten the fixing bolts to the specified torque.
   - Refer to "TORQUE SPECIFICATIONS" in this section.

REAR SEAT ASSEMBLY

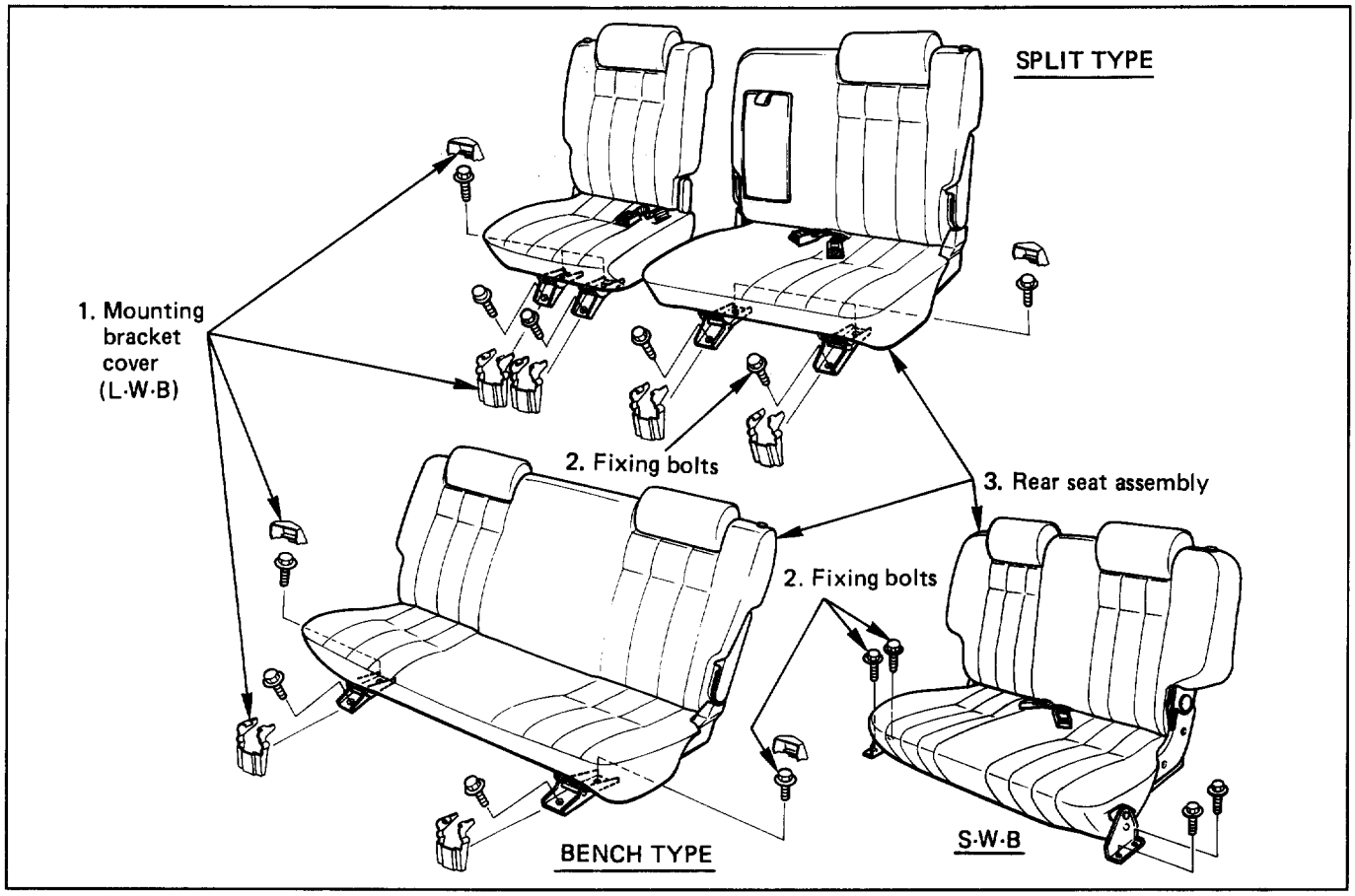

Fig. 10-203

REMOVAL

Preparation: Unlock the rear seat lock to remove it (L·W·B).

1. **Mounting bracket cover (L·W·B)**
2. **Fixing bolts**

Rear seat bolt socket : J-39377 (Fig. 10-204)

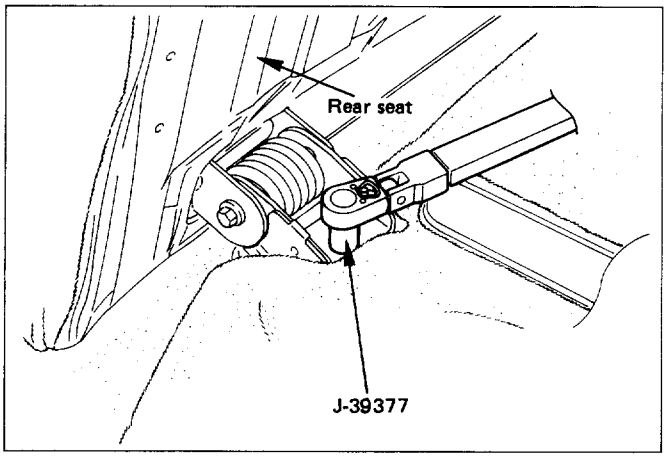

Fig. 10-204

3. **Rear seat assembly**

INSTALLATION

To install, follow the removal steps in the reverse order, noting the following point.

1. Tighten the rear seat fixing bolts to the specified torque.

Torque	N·m (lb·ft)	19 (14)

DISASSEMBLY

<SPRIT TYPE> (Fig. 10-205)

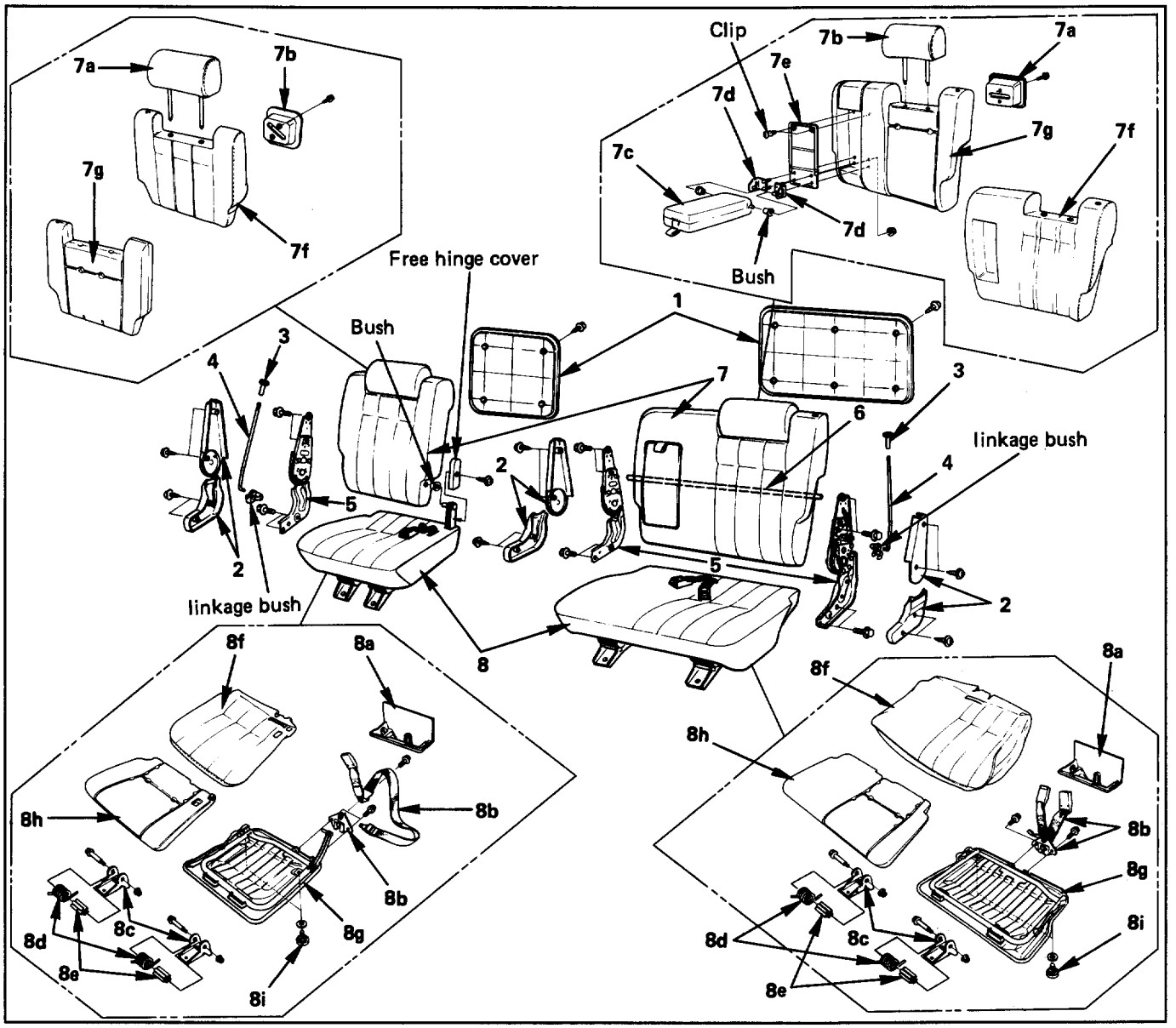

Fig. 10-205

1. **Back board**
   - Remove the clips and back board.
2. **Device cover**
3. **Release knob**
   - Turn the knob counterclockwise to remove it.
4. **Release rod**
   - Disconnect the rod from the linkage bush.
5. **Reclining device (Fig. 10-206)**

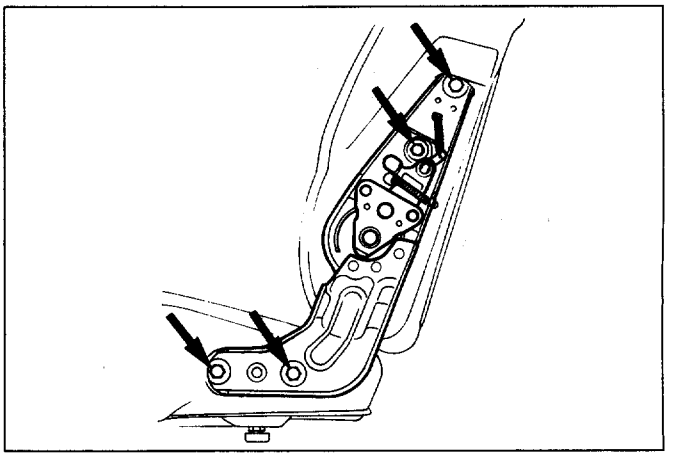

Fig. 10-206

6. Connecting shaft

7. Seat back assembly

7a. Band hook cover

7b. Pillow assembly

- Turn up the seat back trim cover and slit the pad from the back around the place where the lock spring of the guide bush is. Then insert a finger through the slit and pull out the pillow while pressing down on the lock spring. (Fig. 10-207)

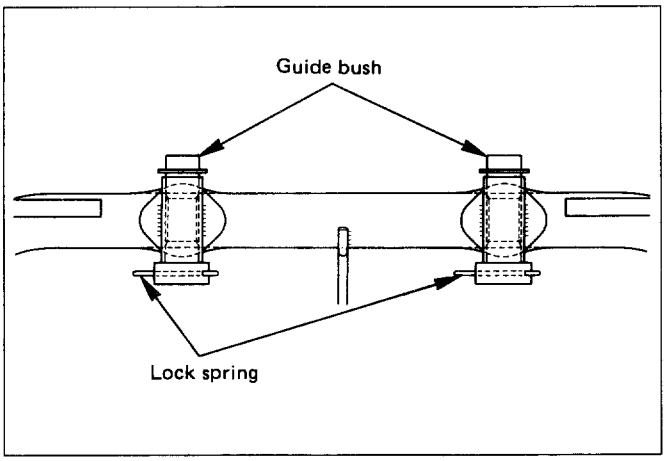

Fig. 10-207

7c. Armrest assembly

- Turn up the seat back trim cover and remove the fixing nuts.

7d. Armrest set bracket

7e. Armrest board

- Remove the fixing clips.

7f. Trim cover

- Remove the trim cover fixing hog rings from the back side of seat back.
- With close attention paid to the hog rings and wire which connect the trim cover and the pad and frame assembly, remove the trim cover while turning it up.

7g. Pad & frame assembly

8. Seat cushion assembly

8a. Seat lock cover

8b. Rear seat belt buckle and lock assembly

8c. Mounting bracket

8d. Return spring

8e. Spring collar

8f. Trim cover

- Remove the hog rings and pull the trim cover out from frame assembly groove.
- With close attention paid to the hog rings and wire which connect the trim cover and the pad and frame assembly, remove the trim cover while turning it up.

8g. Frame assembly

8h. Pad assembly

8i. Stopper rubber

REASSEMBLY

To reassembly, follow the disassembly steps in the reverse order, noting the following point.

1. Tighten the reclining device fixing bolts to the specified torque.

Torque	N·m (lb·ft)	22 (16)

2. Loosen the stopper rubber lock nut and adjust the stopper so there is no clearance between the bottom of the stopper and the carpet, while ensuring the rear seat is firmly locked.
   Then tighten the lock nut securely. (Fig. 10-208)

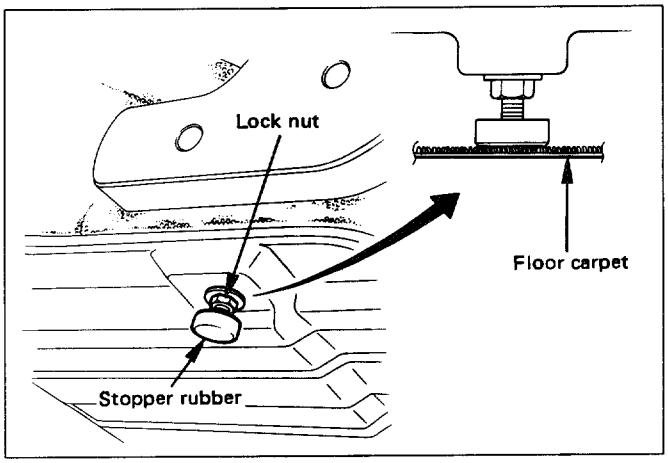

Fig. 10-208

<BENCH TYPE> (Fig. 10-209)

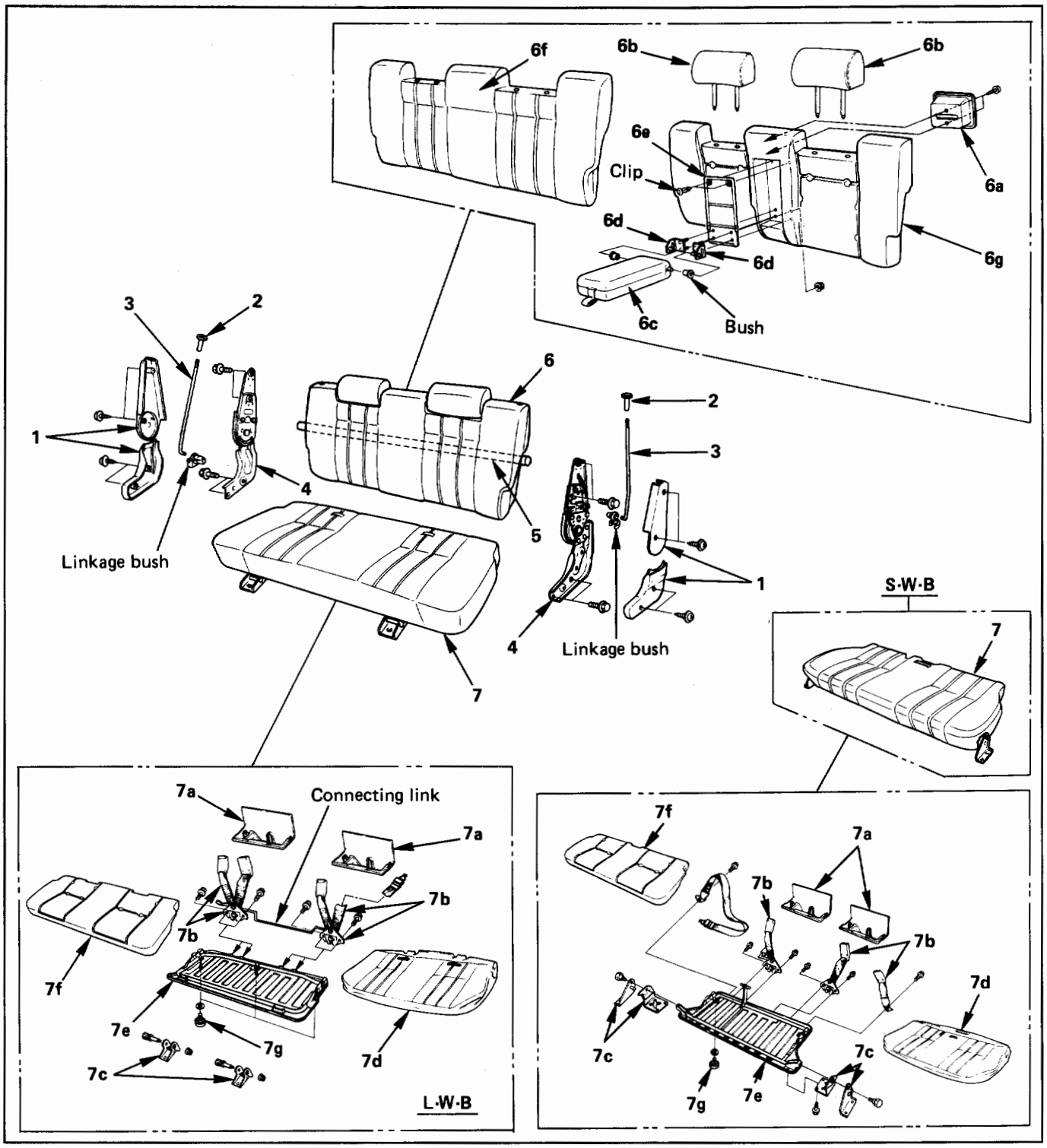

Fig. 10-209

1. **Device cover**
2. **Release knob**
   - Turn the knob to the counterclockwise to remove it.
3. **Release rod**
   - Disconnect the rod from the linkage bush.
4. **Reclining device (Fig. 10-206)**
5. **Connecting shaft**
6. **Seat back assembly**

6a. **Band hook cover**

6b. **Pillow assembly (Fig. 10-207)**
   - Refer to "SPLIT TYPE DISASSEMBLY" in this section.

6c. **Arm rest assembly**

6d. Arm ret set assembly

6e. Arm rest board

6f. Trim cover

- Open the fastener, and with close attention paid to the hog rings and wire which connect the trim cover and the pad & frame assembly, remove the trim cover while turning it up (Fig. 10-210).

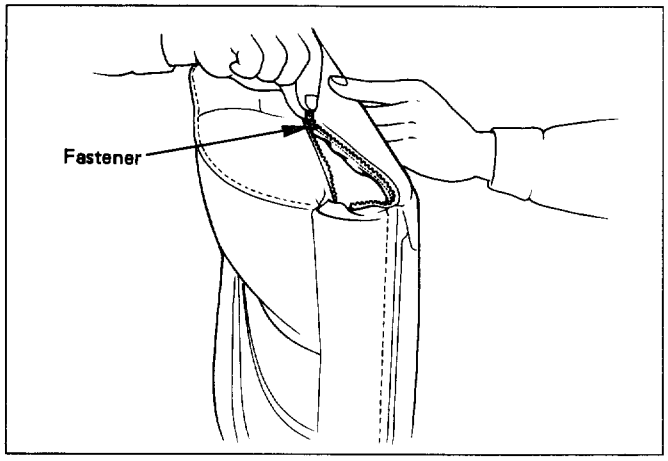

Fig. 10-210

6g. Pad & frame assembly

7. Seat cushion assembly

7a. Seat lock cover

7b. Rear seat belt buckle and lock assembly

7c. Mounting bracket

7d. Trim cover

- Remove the hog rings and pull the trim cover out from frame assembly groove.
- With close attention paid to the hog rings and wire which connect the trim cover and the pad assembly, remove the trim cover while turning it up.

7e. Frame assembly

7f. Pad assembly

7g. Stopper rubber

REASSEMBLY

To reassemble, follow the disassembly steps in the reverse order, noting the following point.

1. Tighten the reclining device fixing bolts to the specified torque.

Torque	N·m (lb·ft)	22 (16)

2. Loosen the stopper rubber lock nut and adjust the stopper so there is no clearance between the bottom of the stopper and the carpet, while ensuring the rear seat is firmly locked.
   Then tighten the lock nut securely. (Fig. 10-211)

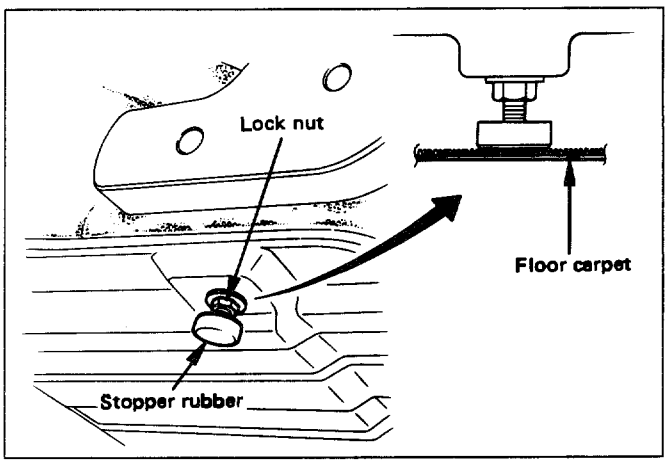

Fig. 10-211

REAR SEAT FOOT REST (L·W·B)

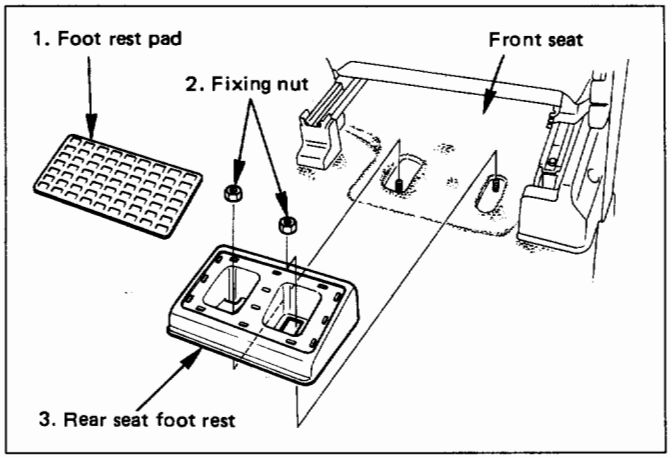

Fig. 10-212

REMOVAL

1. **Foot rest pad (Fig. 10-213)**

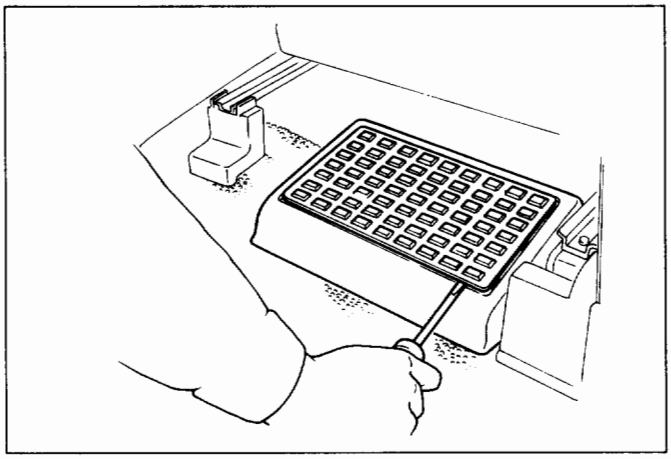

Fig. 10-213

2. **Fixing nut**
3. **Rear seat foot rest**

INSTALLATION

To install, follow the removal steps in the reverse order.

LUGGAGE FLOOR BOX (L·W·B)

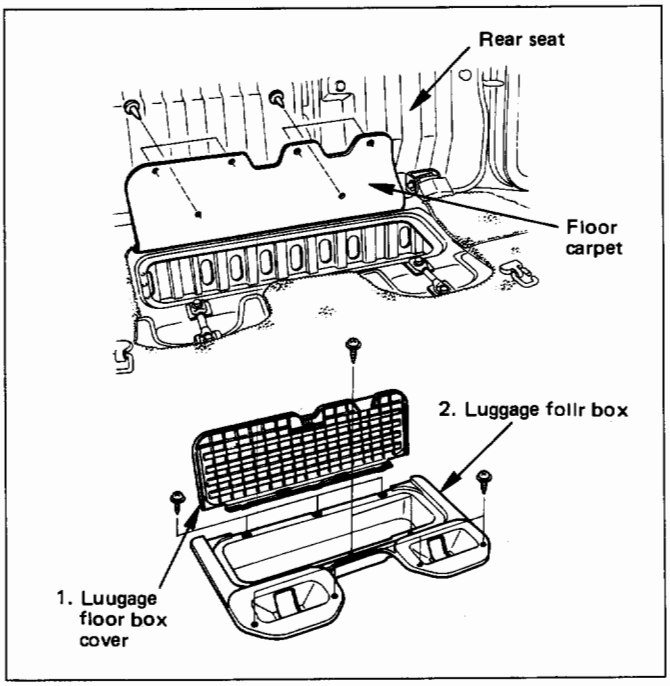

Fig. 10-214

REMOVAL

Preparation: Fold the rear seat assembly to the front direction.

1. **Luggage floor box cover**
   - Remove the clips connecting the floor carpet and the cover.
2. **Luggage floor box**

INSTALLATION

2. **Luggage floor box**
1. **Luggage floor box cover**

ROPE HOOK SET

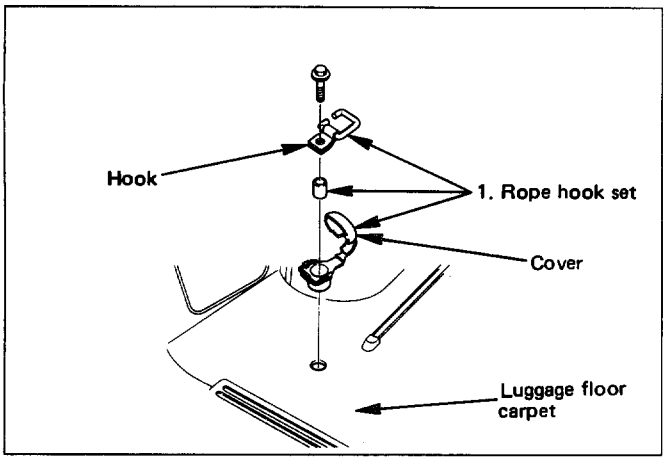

Fig. 10-215

REMOVAL

1. **Rope hook set**
   - Open the hook cover and hook fixing bolt.

INSTALLATION

1. **Rope hook set**
   - Tighten the hook fixing bolt to the specified torque.

Torque	N·m (lb·in)	13 (113)

SEAT BELT

FRONT SEAT BELT

LONG WHEEL BASE

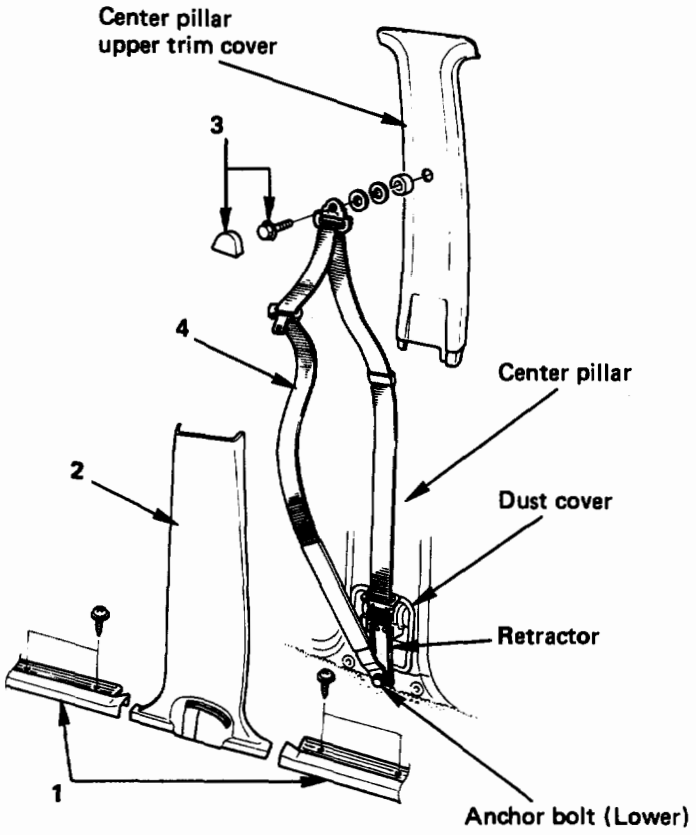

Removal steps
1. Door sill plate (Front & Rear)
2. Center pillar lower trim cover
3. Front seat belt anchor bolt cover and anchor bolt (Upper side)
4. Front seat belt assembly

Installation steps
To install, follow the removal steps in the reverse order.

Fig. 10-216

REMOVAL

Preparation: Disconnect the battery ground cable

1. **Door sill plate (Front & Rear)**
2. **Center pillar lower trim cover**
3. **Front seat belt anchor bolt cover and anchor bolt (Upper side)**
   - Refer to "CENTER PILLAR AND ROOF SIDE TRIM COVER" in this section.
4. **Front seat belt**
   - Remove the seat belt lower anchor bolt and screw.

INSTALLATION

To install, follow the removal steps in the reverse order, noting the following points;

1. Pass the seat belt through the lower trim cover hole, and tighten the seat belt anchor bolts to the specified torque.

Torque	N·m (lb·ft)	39 (29)

2. After installing the trim cover to the body panel securely, close the lower trim cover.

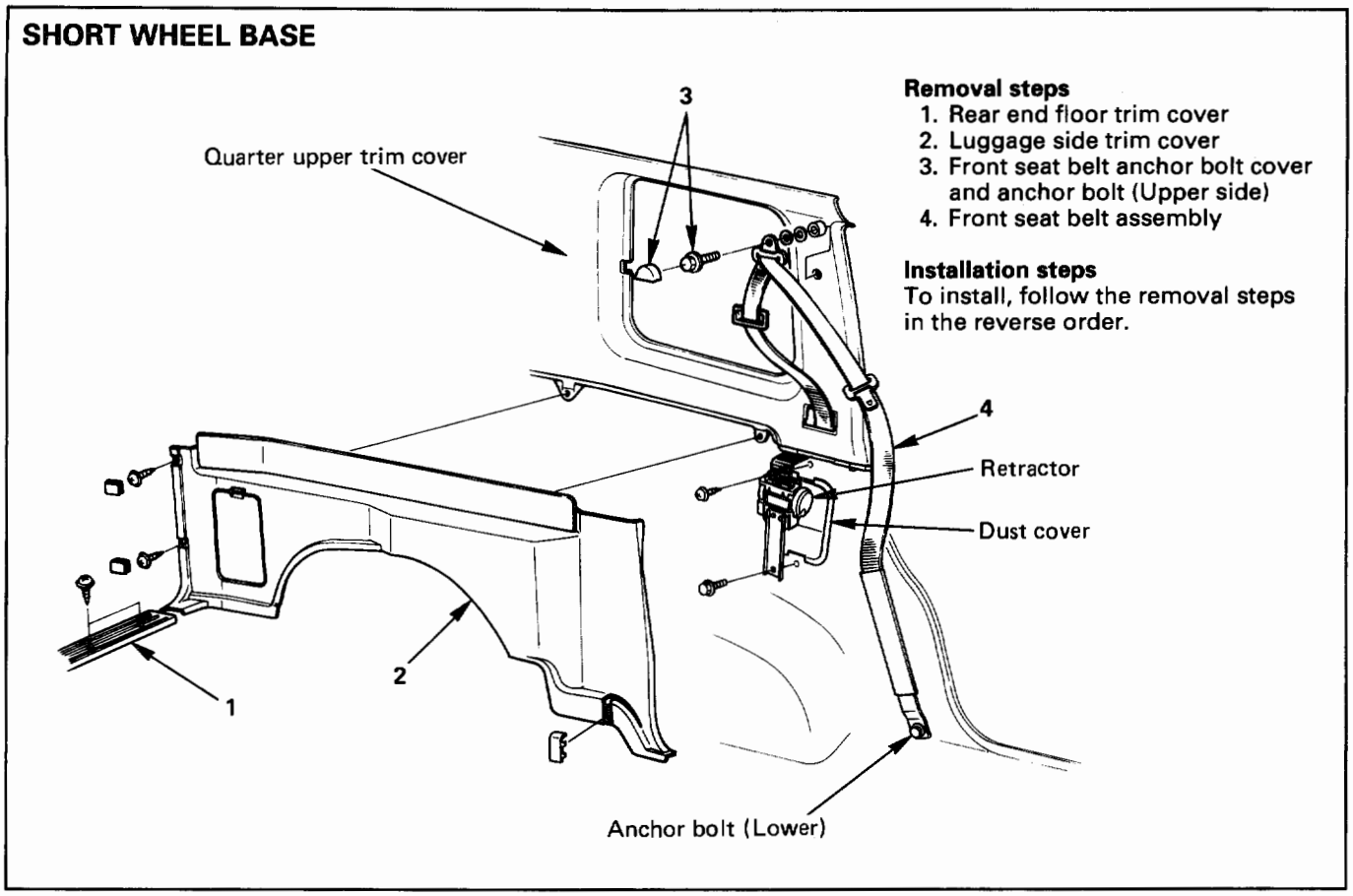

Fig. 10-217

REMOVAL

Preparation: Disconnect the battery ground cable

1. **Rear end floor trim cover**
2. **Luggage side trim cover**
3. **Front seat belt anchor bolt cover and anchor bolt (Upper side)**
   - Refer to "LUGGAGE SIDE AND QUARTER UPPER TRIM COVER" in this section.
4. **Front seat belt**
   - Remove the seat belt lower anchor bolt and screw.

INSTALLATION

To install, follow the removal steps in the reverse order, noting the following points;

1. Pass the seat belt through the lower trim cover hole, and tighten the seat belt anchor bolts to the specified torque.

Torque	N·m (lb·ft)	39 (29)

2. After installing the trim cover to the body panel securely, close the lower trim cover.

FRONT SEAT BUCKLE ASSEMBLY

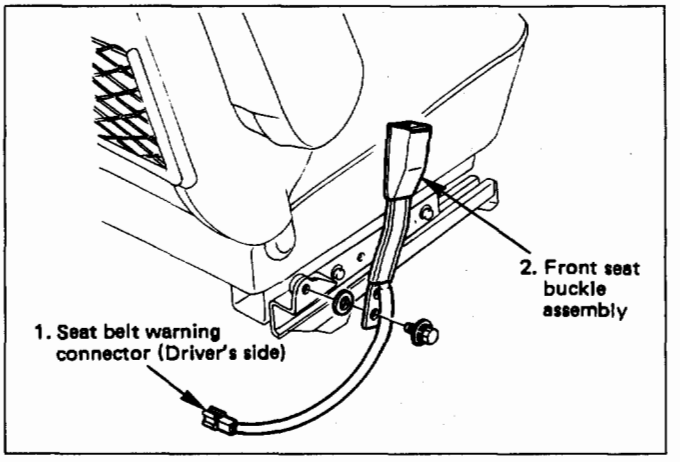

Fig. 10-218

REMOVAL

Preparation: Disconnect the battery ground cable

1. **Seat belt warning connector (Driver's side)**
2. **Front seat buckle assembly**

INSTALLATION

To install, follow the removal steps in the reverse order, noting the following points.

1. Fix the buckle to the rotation-stop position securely to install the front seat buckle assembly. (Fig. 10-219)
2. Tighten the buckle anchor bolt to the specified torque.

Torque	N·m (lb·ft)	39 (29)

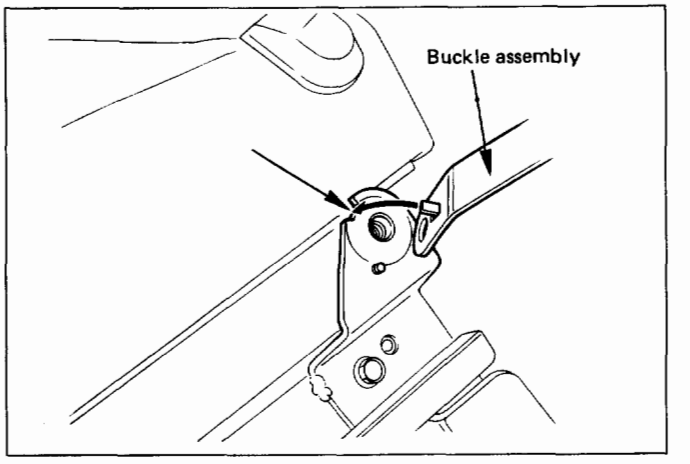

Fig. 10-219

REAR SEAT BELT

LONG WHEEL BASE

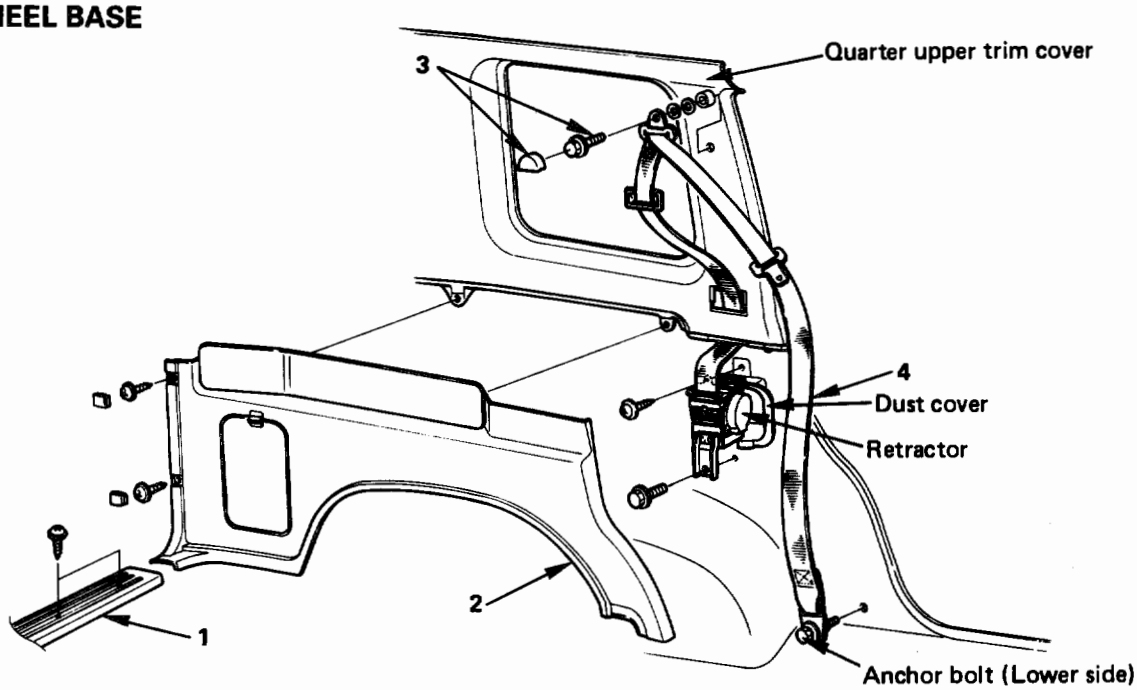

Removal steps
1. Rear end floor trim cover
2. Luggage side trim cover
3. Rear seat belt anchor bolt cover and anchor bolt (Upper side)
4. Rear seat belt assembly

Installation steps
To install, follow the removal steps in the reverse order.

Fig. 10-220

REMOVAL

Preparation: Battery ground cable

1. **Rear end floor trim cover**
2. **Luggage side trim cover**
   - Refer to "LUGGAGE SIDE AND QUARTER UPPER TRIM PANEL" in this section.
3. **Rear seat belt anchor bolt cover and anchor bolt (Upper side)**
4. **Rear seat belt**
   - Remove seat belt lower ancher bolt.
   - Remove retractor from dust cover slit.

INSTALLATION

To install, follow the removal steps in the reverse order, noting the following point;

1. Tighten the seat belt anchor bolts to the specified torque.

Torque	N·m (lb·ft)	39 (29)

SHORT WHEEL BASE

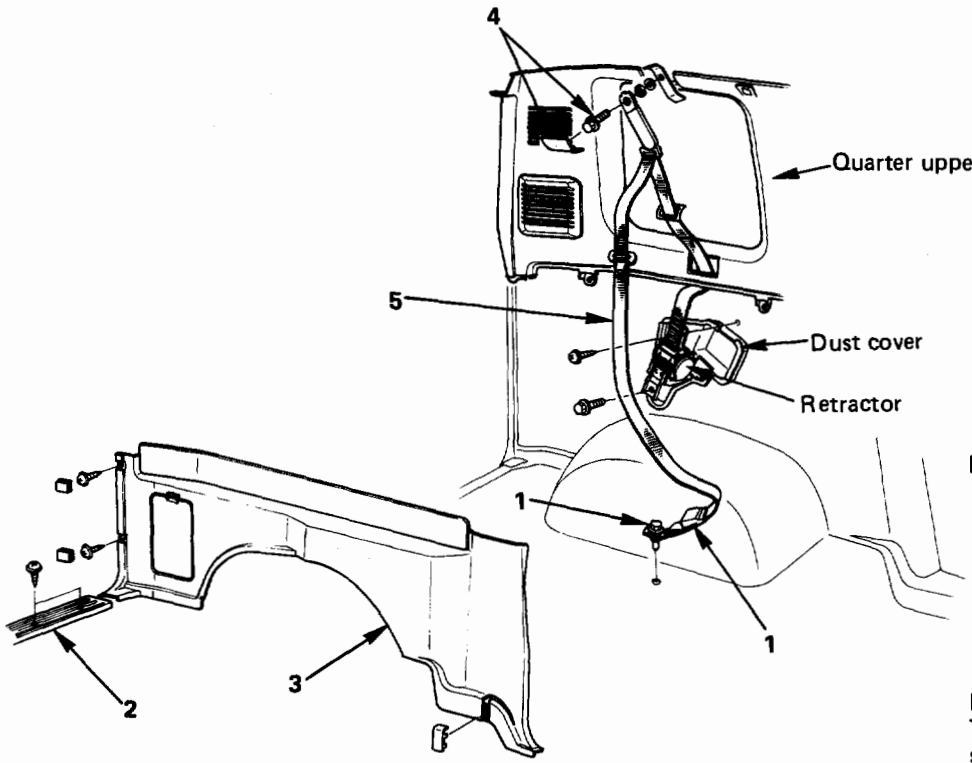

Removal steps
1. Rear seat belt lower anchor bolt cover and anchor bolt
2. Rear end floor trim cover
3. Luggage side trim cover
4. Rear seat belt upper anchor bolt cover and anchor bolt.
5. Rear seat belt assembly

Installation steps
To install, follow the removal steps in the reverse order.

Fig. 10-221

REMOVAL

Preparation: Disconnect the battery ground cable

1. **Rear seat belt lower anchor bolt cover and anchor bolt (Fig. 10-222)**

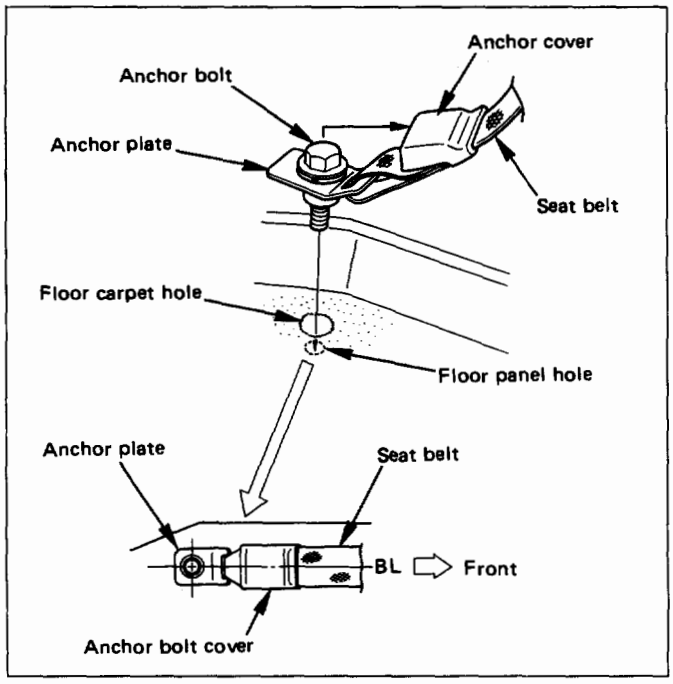

Fig. 10-222

2. **Rear end floor trim cover**
3. **Luggage side trim cover**
   - Refer to "LUGGAGE SIDE AND QUARTER UPPER TRIM COVER" in this section.
4. **Rear seat belt upper anchor bolt cover and anchor bolt. (Fig. 10-223)**

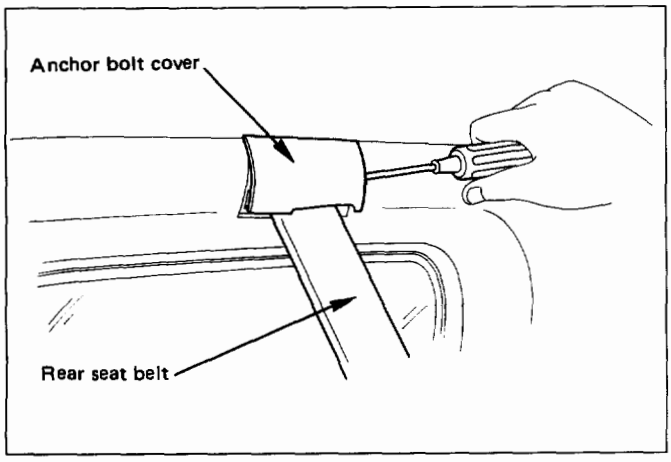

Fig. 10-223

5. **Rear seat belt assembly**
   - Remove the seat belt lower anchor bolt and screw.
   - Remove the retractor from the dust cover slit.

INSTALLATION

To install, follow the removal steps in the reverse order, noting the following points.

1. Be sure to install the lower side anchor plate straight horizontally, with mounting hole of the plate at the center. (Fig. 10-222)
2. Tighten the seat belt anchor bolts to the specified torque.

Torque	N·m (lb.ft)	39 (29)

REAR CENTER SEAT BELT (S·W·B)

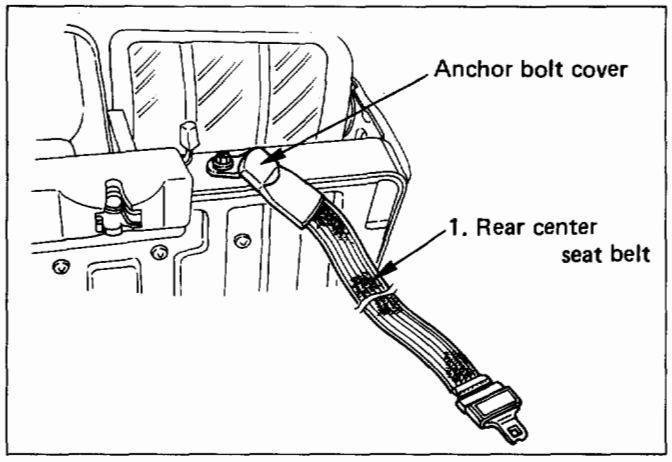

Fig. 10-224

REMOVAL

1. **Rear center seat belt**
   - Prying the anchor bolt cover and remove the fixing bolt.

INSTALLATION

1. **Rear center seat belt**
   - Tighten the anchor bolt to the specified torque.

Torque	N·m (lb·ft)	39 (29)

REAR CENTER SEAT BELT/BUCKLE ASSEMBLY

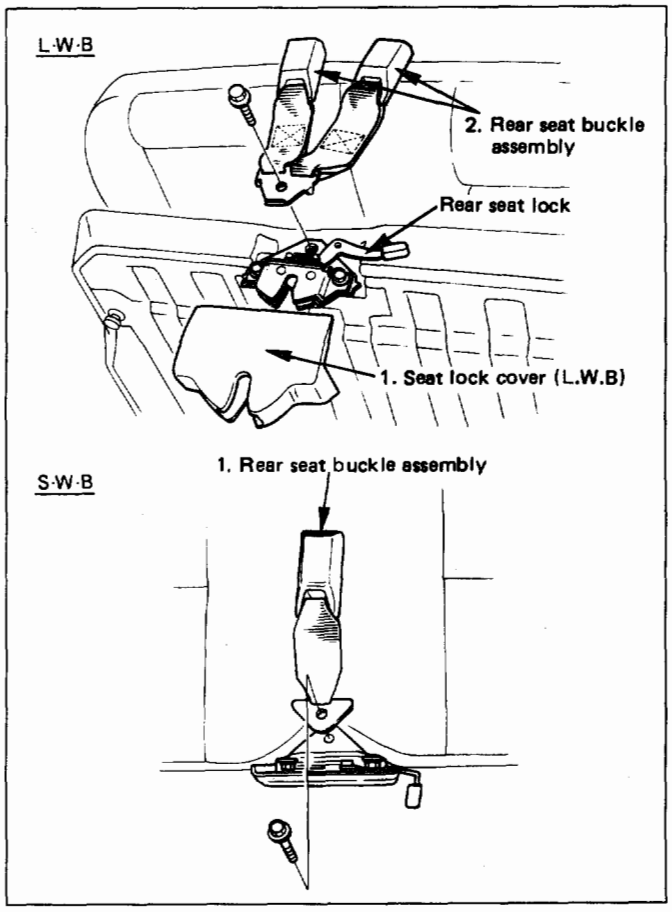

Fig. 10-225

REMOVAL

1. **Seat lock cover (L·W·B)**
   - Remove the catch portion of the seat lock from the cover. (Fig. 10-226)
2. **Rear seat buckle assembly**

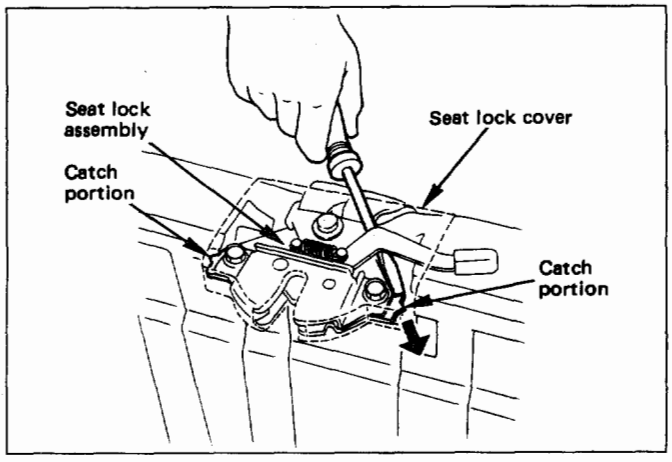

Fig. 10-226

INSTALLATION

2. **Rear seat buckle assembly**
   - Fix the buckle to the rotation stopper and tighten the anchor bolt to the specified torque. (Fig. 10-227)

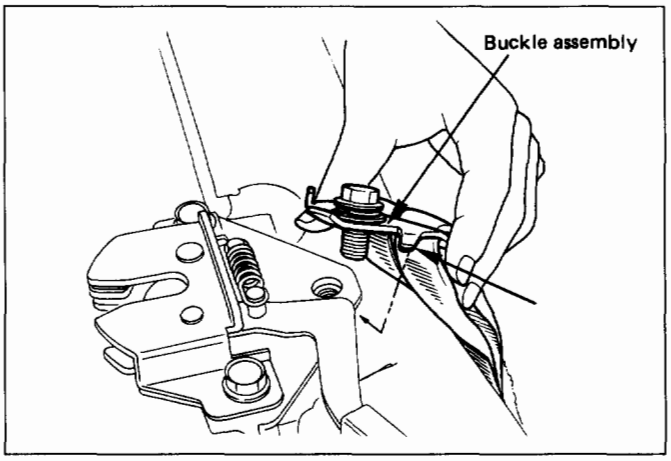

Fig. 10-227

Torque	N·m (lb·ft)	39 (29)

1. **Seat lock cover (L·W·B)**

REAR SEAT LOCK ASSEMBLY

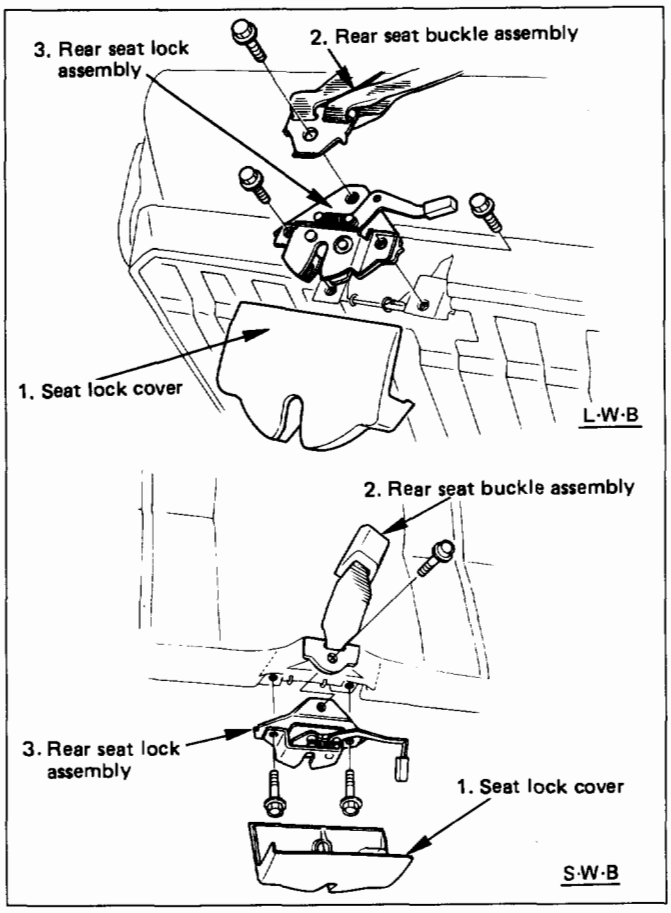

Fig. 10-228

REMOVAL

1. **Seat lock cover (Fig. 10-226)**
2. **Rear seat buckle assembly**
3. **Rear seat lock assembly**
   - Disconnect the link connecting the lock assemblies on the both sides (bench type & S·W·B).

INSTALLATION

To install, follow the removal steps in the reverse order, noting the following point.

1. Tighten the seat lock fixing bolts to the specified torque.

Torque	N·m (lb·ft)	42 (31)

REAR SEAT STRIKERS

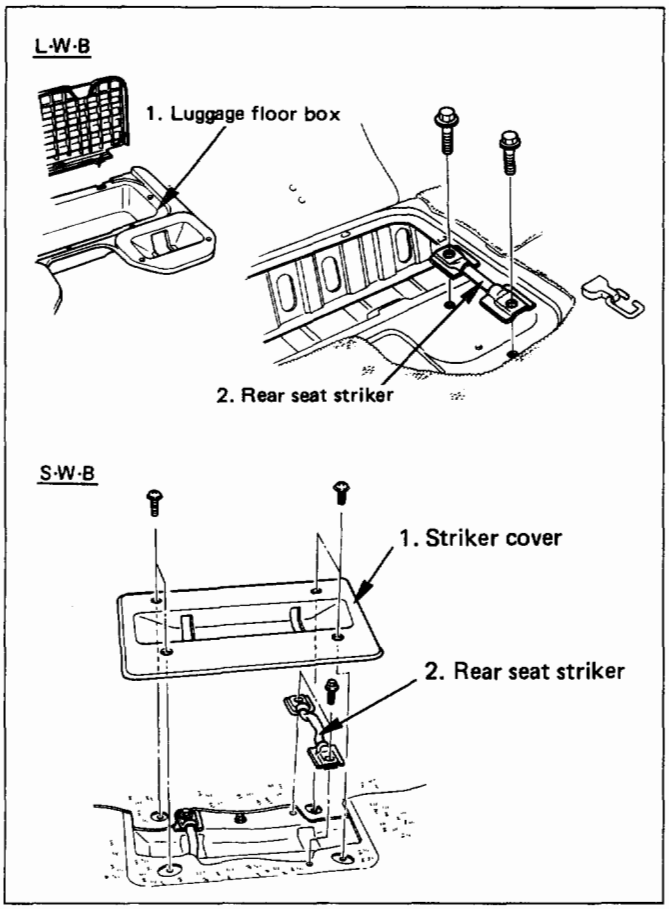

Fig. 10-229

REMOVAL

Preparation: Folding the rear seat assembly to the front direction.

1. **Luggage floor box (L·W·B)/Striker cover (S·W·B)**
2. **Rear seat striker**

INSTALLATION

To install, follow the removal steps in the reverse order, noting the following point.

1. Tighten the striker fixing bolts to the specified torque.

	Torque	N·m (lb·ft)	40 (30)

ROOF

HEADLINING

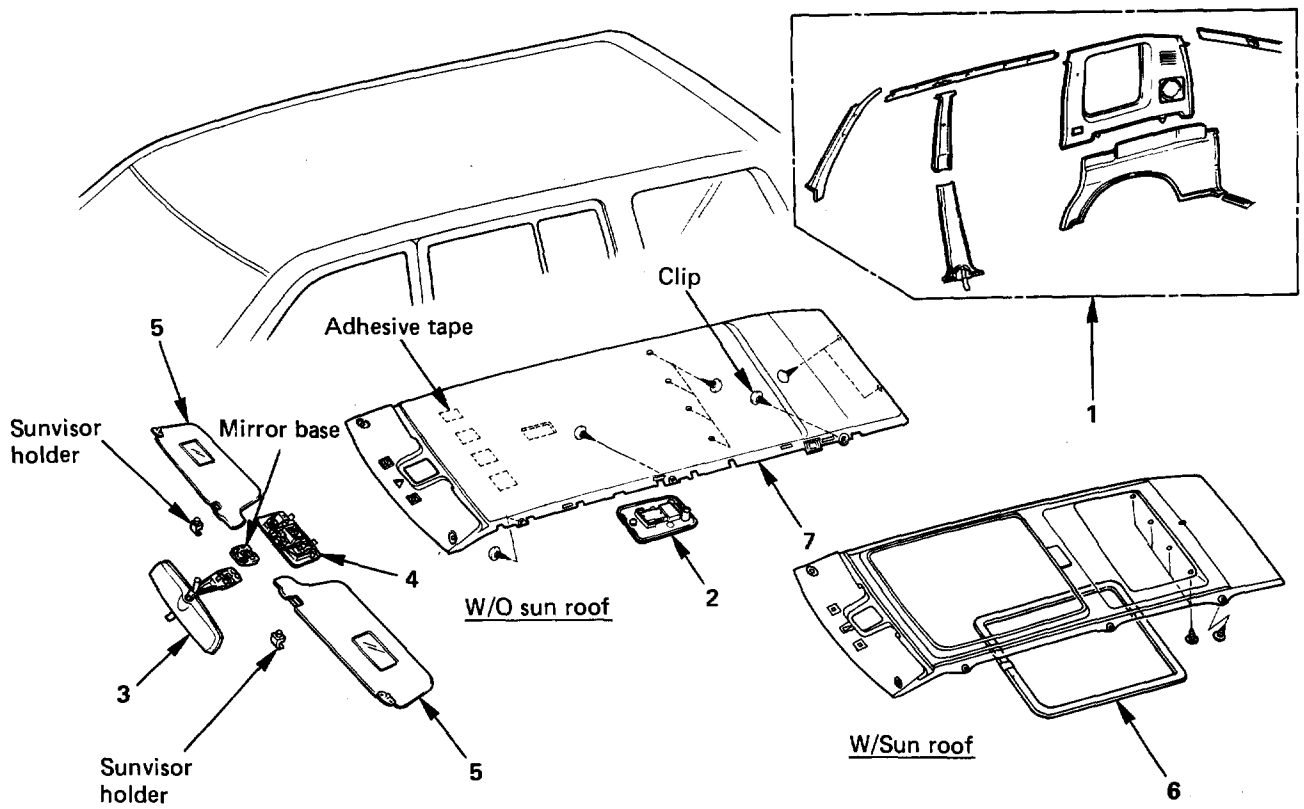

Removal steps
1. Interior trim panels
2. Dome light
3. Rear view mirror
4. Map light
5. Sunvisors
6. Sun roof finisher (W/Sun roof)
7. Headlining

Installation steps
To install, follow the removal steps in the reverse order.

Fig. 10-230

REMOVAL

Preparation: Battery ground cable

1. **Interior trim panels**
   - Refer to "INTERIOR TRIM PANELS" in this section.
2. **Dome light**
   - Remove dome light lens and fixing screws.
   - Disconnect the dome light connectors.
3. **Rear view mirror (Fig. 10-231)**
   - Turn the stopper rubber counterclockwise and remove it (Fig. 10-235).
   - Press the mirror stay toward the front of the vehicle.
   - Remove the mirror base.
4. **Map light/Sun roof switch (Fig. 10-232)**
   - Pry the map light clip free from the map light/sun roof switch bracket and disconnect the connector.

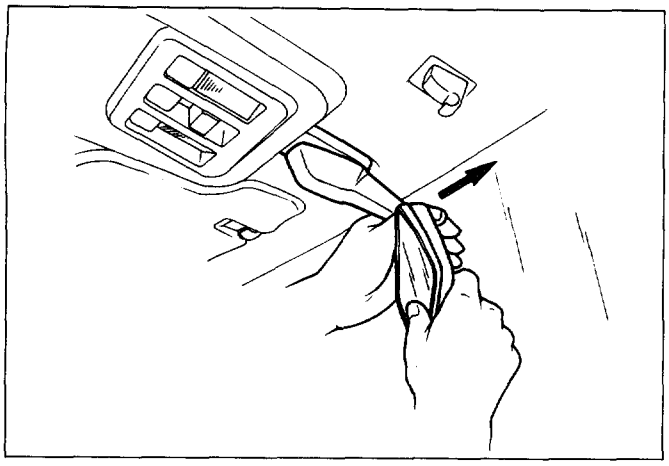

Fig. 10-231

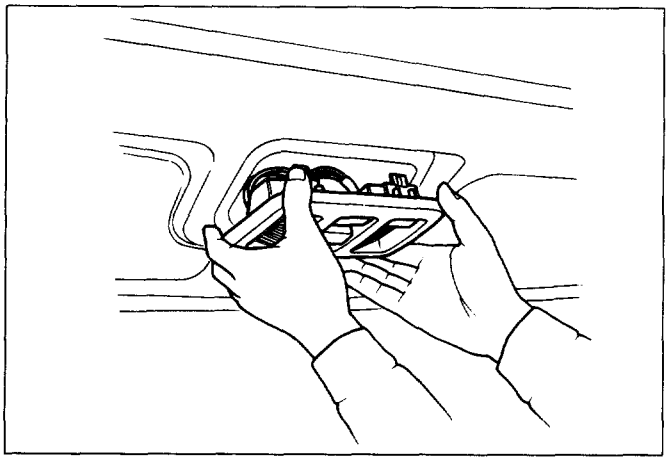

Fig. 10-232

5. **Sunvisors (Fig. 10-233)**
   - Remove the fixing screw and turn the sunvisor holder to remove it.
6. **Sun roof finisher (W/Sun roof)**
7. **Headlining**
   - Remove the headlining fixing clips.

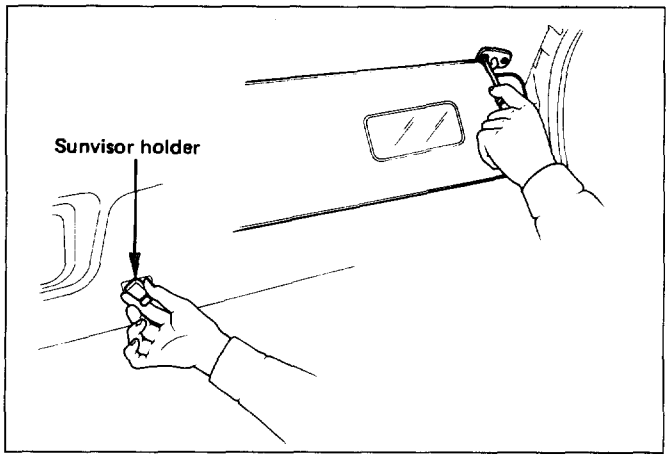

Fig. 10-233

INSTALLATION

To install, follow the removal steps in the reverse order, noting the following points;

1. Peel off the adhesive tape from the reverse side of the head lining and affix it to the roof by applying pressure to it (W/O sun roof).
2. Install the headlining so that the fixing clip will not come off.
3. To install the sun roof finisher, first fit it in at one place with the head lining close to the sun roof frame complete, then install entire finisher tightly by hitting it with a plastic hammer, not allowing it to move up. (Fig. 10-234)

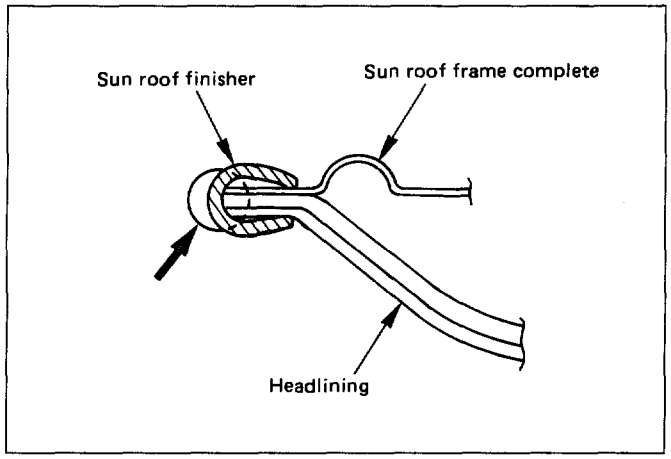

Fig. 10-234

SUN ROOF GLASS

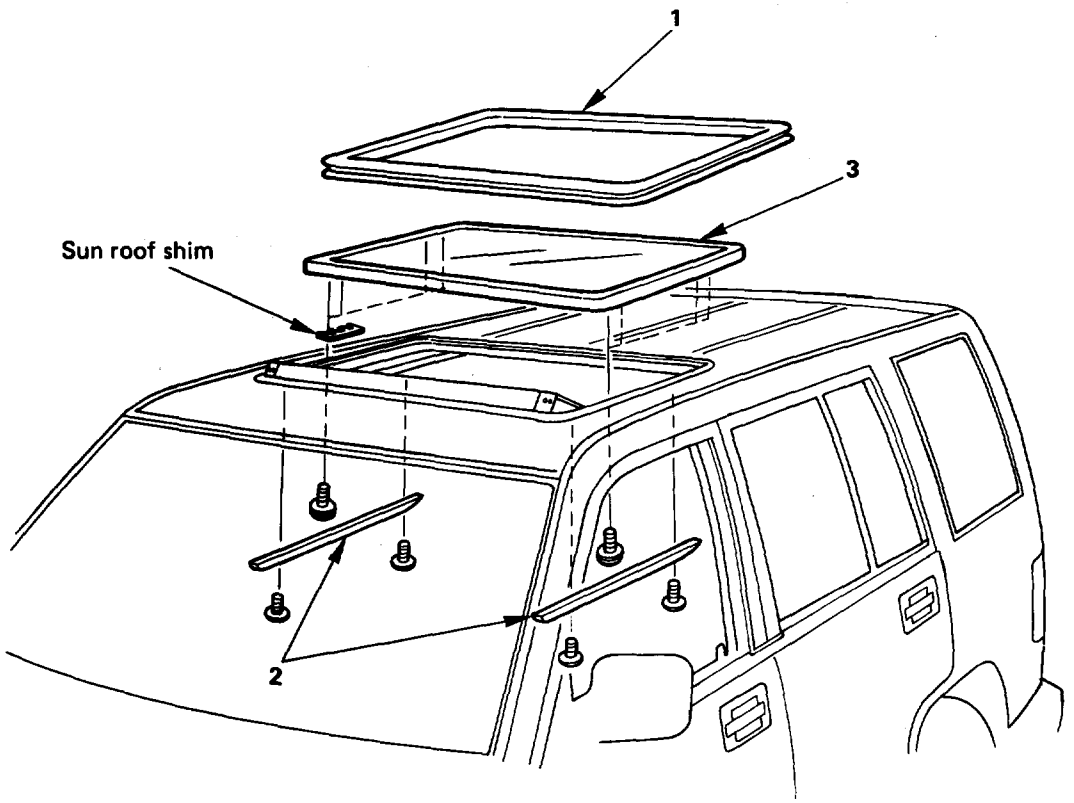

Removal steps
1. Sun roof weatherstrip
2. Decoration cover
3. Sun roof glass

Installation steps
1. Sun roof weatherstrip
3. Sun roof glass
2. Decoration cover

Fig. 10-235

REMOVAL

Preparation: Disconnect the battery ground cable

1. **Sun roof weatherstrip**
   - Open the sun roof and pull the weatherstrip out from the roof panel.
2. **Decoration cover**
   - Close the sun roof and open the sunshade.
   - Remove the decoration cover fixing screws. (Fig. 10-236)

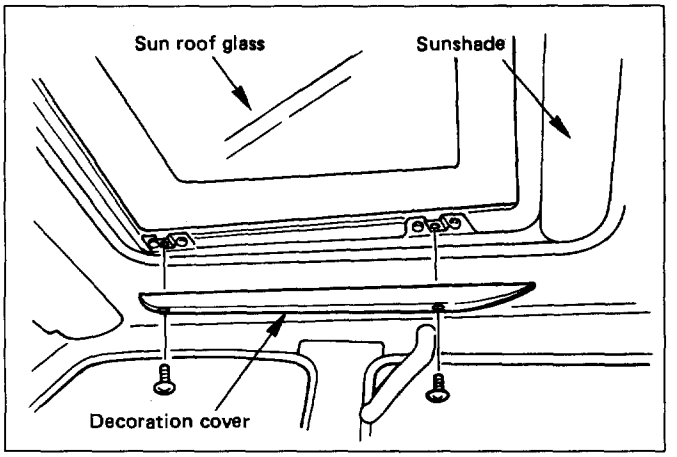

Fig. 10-236

3. **Sun roof glass**
   - Remove the 8 fixing screws. (Fig. 10-237)

   NOTE:
   If shims are used between the sun roof set plate and the glass, note the number of shims used.

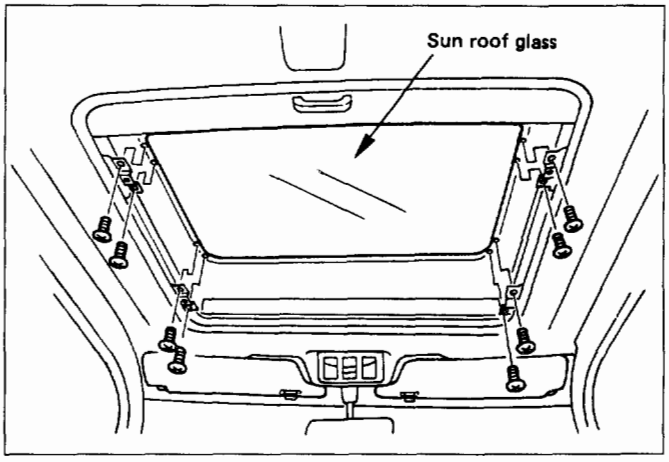

Fig. 10-237

INSTALLATION

1. **Sun roof weatherstrip**
   - Clean the body panel of the weatherstrip fixing portion.
   - Weatherstrip cannot be reused. Always replace with a new one.
   - Be sure to install sun roof weatherstrip so that the white marking side of weatherstrip is on the front side of the vehicle. (Fig. 10-238)

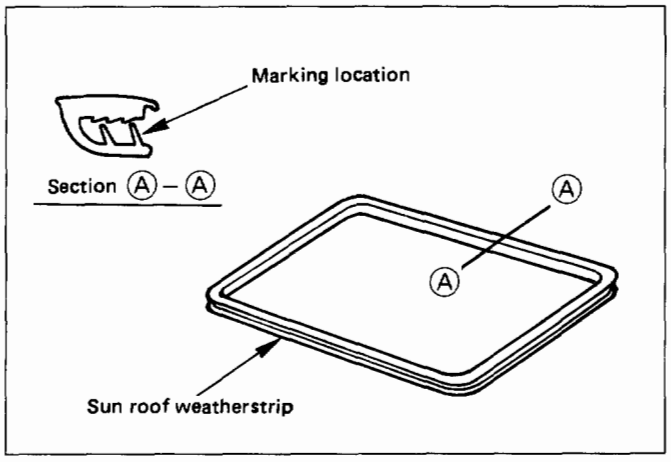

Fig. 10-238

3. **Sun roof glass**
   - Temporary install the glass to the sun roof frame.
   - Open and shut the sun roof 4 to 5 times to position correctly the sun roof weather strip and the glass in the longitudinal and latitudinal setting positions.
   - Insert the original shims between the sun roof set plate and the glass.
   - Tighten the sun roof glass fixing screws to the specified torque.

Torque	N·m (lb·in)	10 (87)

   - After the sun roof glass is installed, check the roof panel and sun roof glass for vertical install position. If out of standard, adjust with shim.
     For the installation standard, refer to "BODY DIMENSION" in this section.

2. **Decoration cover**

SUN ROOF DEFLECTOR

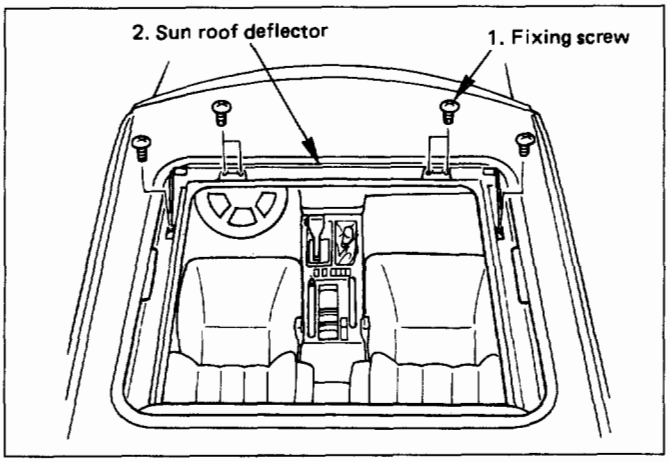

Fig. 10-239

REMOVAL

Preparation: Open the sun roof

1. **Fixing screws**
2. **Sun roof deflector**

INSTALLATION

To install, follow the removal steps in the reverse order.

SUNSHADE

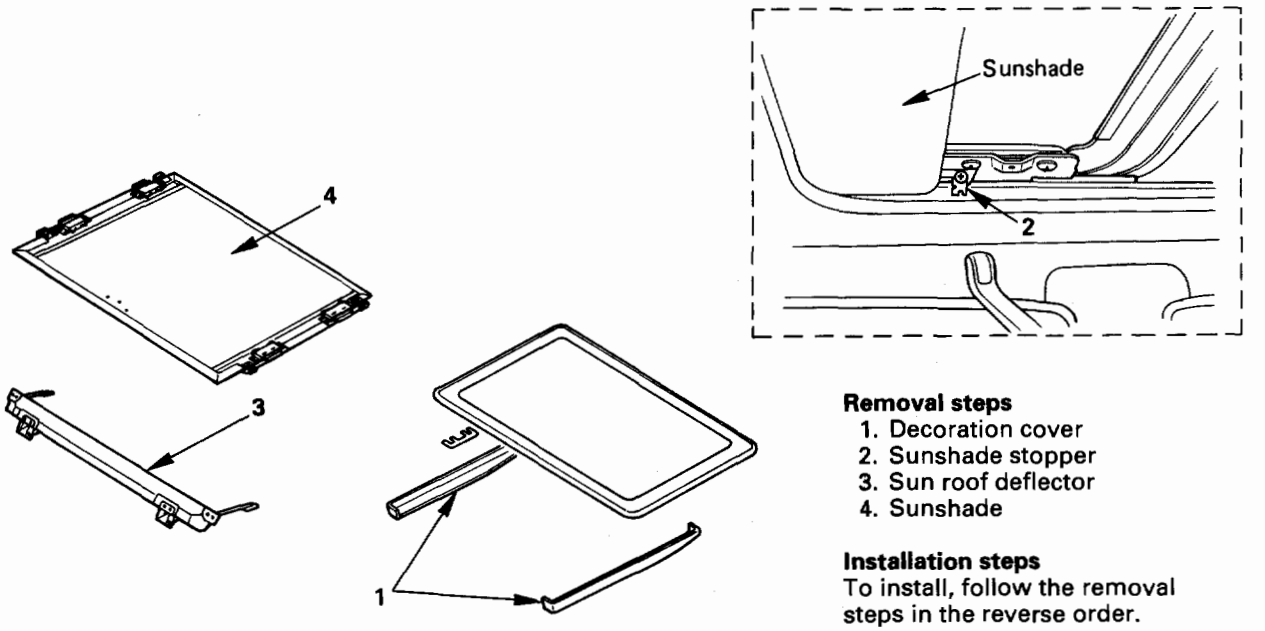

Removal steps
1. Decoration cover
2. Sunshade stopper
3. Sun roof deflector
4. Sunshade

Installation steps
To install, follow the removal steps in the reverse order.

Fig. 10-240

REMOVAL

1. **Decoration cover**
2. **Sunshade stopper**
   - Open the sun roof half position and remove the sunshade stopper screw. Then pull out sunshade until its front side protrudes a little from the sun roof glass.
3. **Sun roof deflector**
   - Refer to "SUN ROOF DEFLECTOR" in this section.
4. **Sunshade**
   - Open the sun roof completely.
   - Remove the sunshade guide rail stopper, and pull out the sunshade up to the guide rail edge. Remove the guide pin in sunshade through the notch of guide rail edge, then draw the sunshade out of the roof by pushing inward the retaining clips on both sides. (Fig. 10-241)

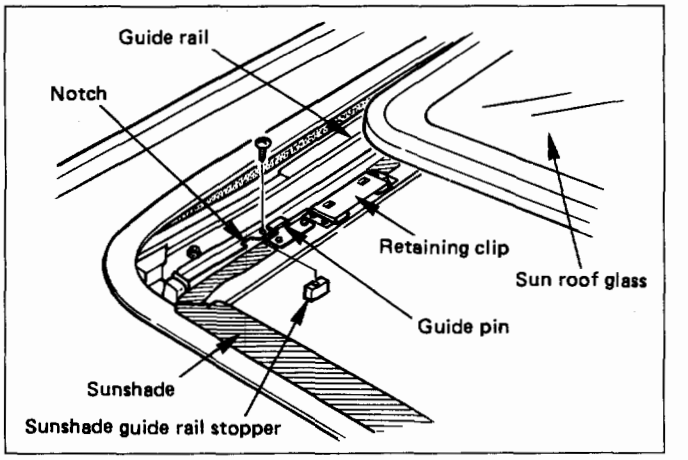

Fig. 10-241

SUN ROOF FRAME COMPLETE ASSEMBLY

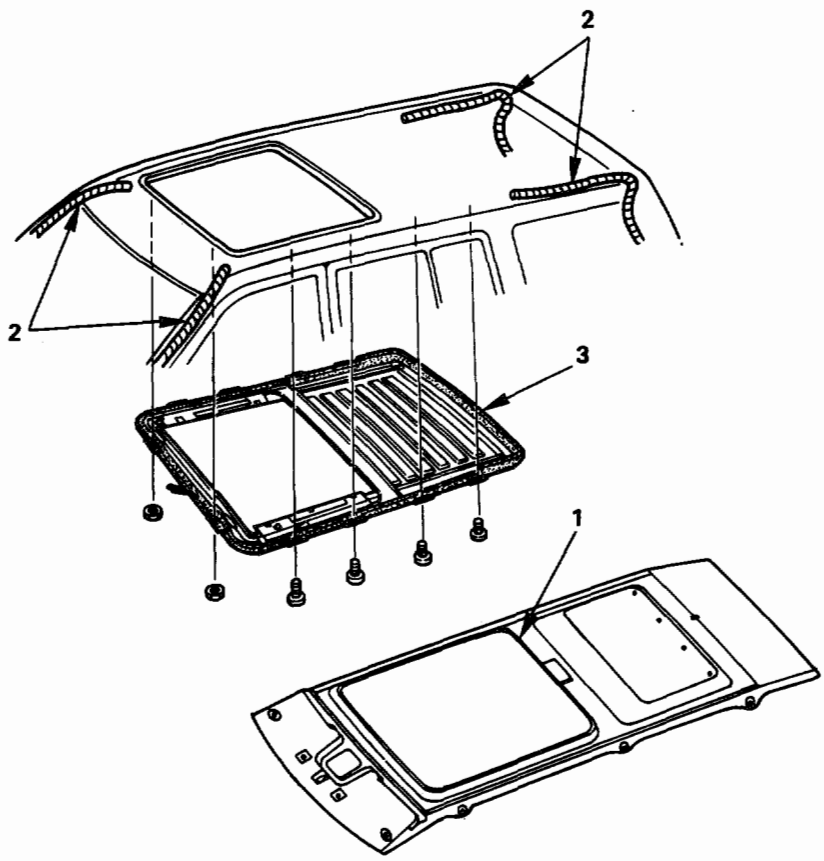

Removal steps
1. Headlining
2. Sun roof drain hose
3. Sun roof frame complete assembly

Installation steps
To install, follow the removal steps in the reverse order.

Fig. 10-242

REMOVAL

Preparation: Disconnect the battery ground cable

1. **Headlining**
   - Refer to "HEADLINING" in this section.
2. **Sun roof drain hose**
   - Disconnect the sun roof drain hose at the sun roof frame side. (Fig. 10-243)

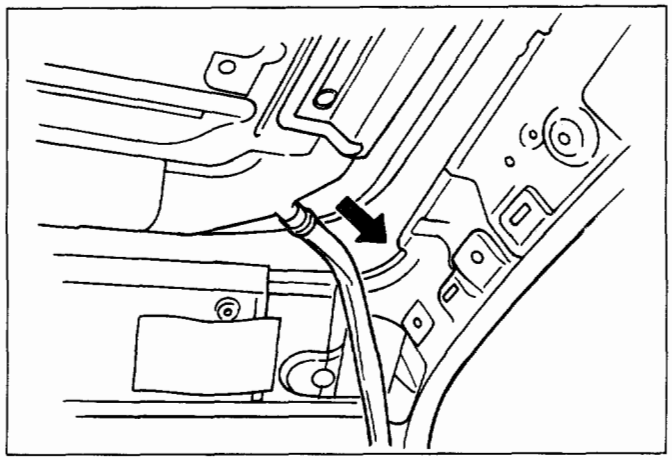

Fig. 10-243

3. **Sun roof frame complete assembly**
   - Disconnect the sun roof harness connection.
   - Remove the 2 fixing nuts (front side) and 4 fixing bolts (each side) from the frame complete.

NOTE:
Be sure to remove the frame complete while supporting it.

INSTALLATION

3. **Sun roof frame complete assembly**
   - Tighten the frame complete fixing bolts and nuts to the specified torque.

Torque	N·m (lb·in)	10 (87)

- After installing the frame compelte, loosen the sun roof glass fixing nuts and adjust the sun roof glass setting position. Refer to "SUN ROOF GLASS" installation steps in this section.

2. **Sun roof drain hose**
1. **Headlining**

DISASSEMBLY

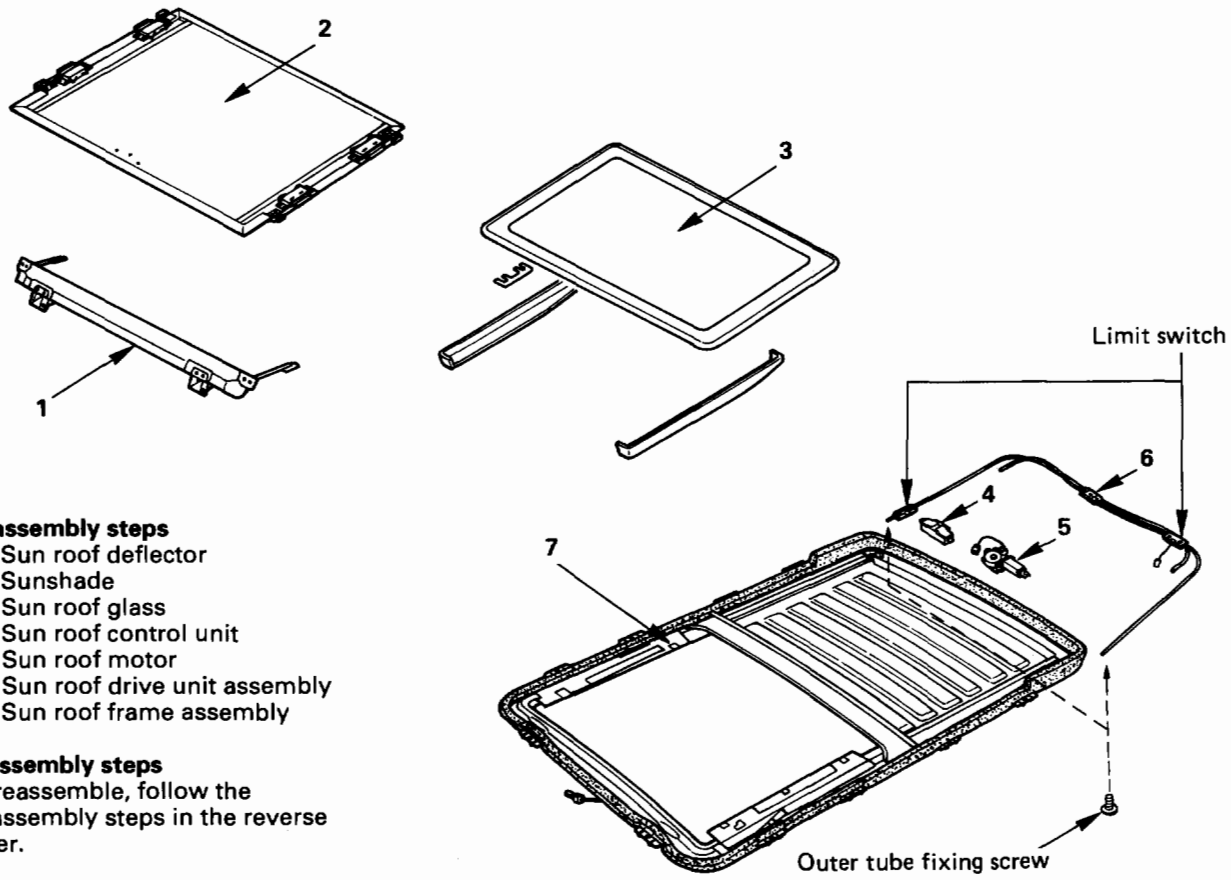

Disassembly steps
1. Sun roof deflector
2. Sunshade
3. Sun roof glass
4. Sun roof control unit
5. Sun roof motor
6. Sun roof drive unit assembly
7. Sun roof frame assembly

Reassembly steps
To reassemble, follow the disassembly steps in the reverse order.

Fig. 10-244

Preparation: Open the sun roof

1. **Sun roof deflector**
   - Remove the fixing screws.
2. **Sunshade**
   - Refer to "SUNSHADE" in this section
3. **Sun roof glass**
   - Close the sun roof and remove the decoration cover and fixing screws.
   - If shims are used between the sun roof set plate and the glass, note the number of the shims.
4. **Sun roof control unit**
   - Disconnect the connectors and remove the fixing screws.
5. **Sun roof motor**
   - Disconnect the connector and remove the fixing nuts and screws.
6. **Sun roof drive unit assembly**
   - Remove the sun roof limit switches.
   - Remove the cable outer tube fixing screws.
   - Remove the outer tube fixing clamps and guide rail fixing nuts.
   - Prying the guide rail a little with a screwdriver, draw the outer tube out of the grommet.
     At this time, the inner cable remains on the frame assembly. (Fig. 10-245)

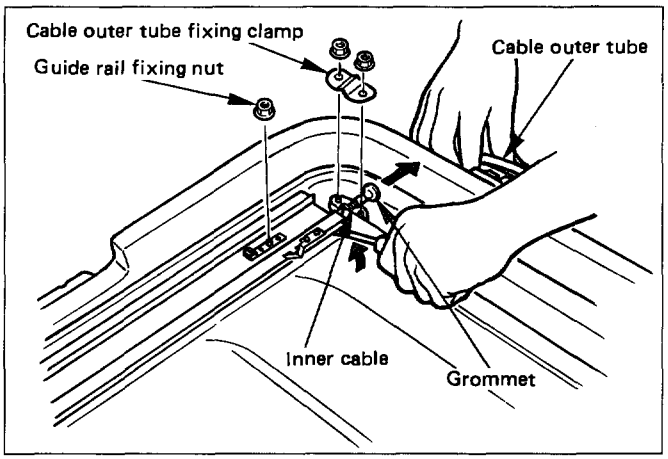

Fig. 10-245

7. **Sun roof frame assembly**

REASSEMBLY

To reassemble, follow the disassembly steps in the reverse order, noting the following points.

1. When installing the motor or drive unit, set the sun roof set plate in the full closed position by pushing the link portion. (Fig. 10-246)
2. When installing the sun roof glass to the sun roof set plate, insert the original shims in the same position before removing the sun roof glass.

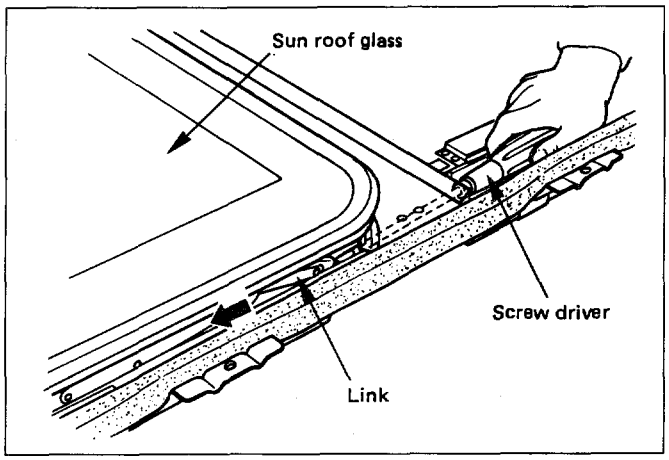

Fig. 10-246

SUN ROOF DRAIN HOSE

FRONT SIDE

Removal steps
1. Front inner liner
2. Headlining
3. Instrument panel assembly
4. Sun roof drain hose

Installation steps
To install, follow the removal steps in the reverse order.

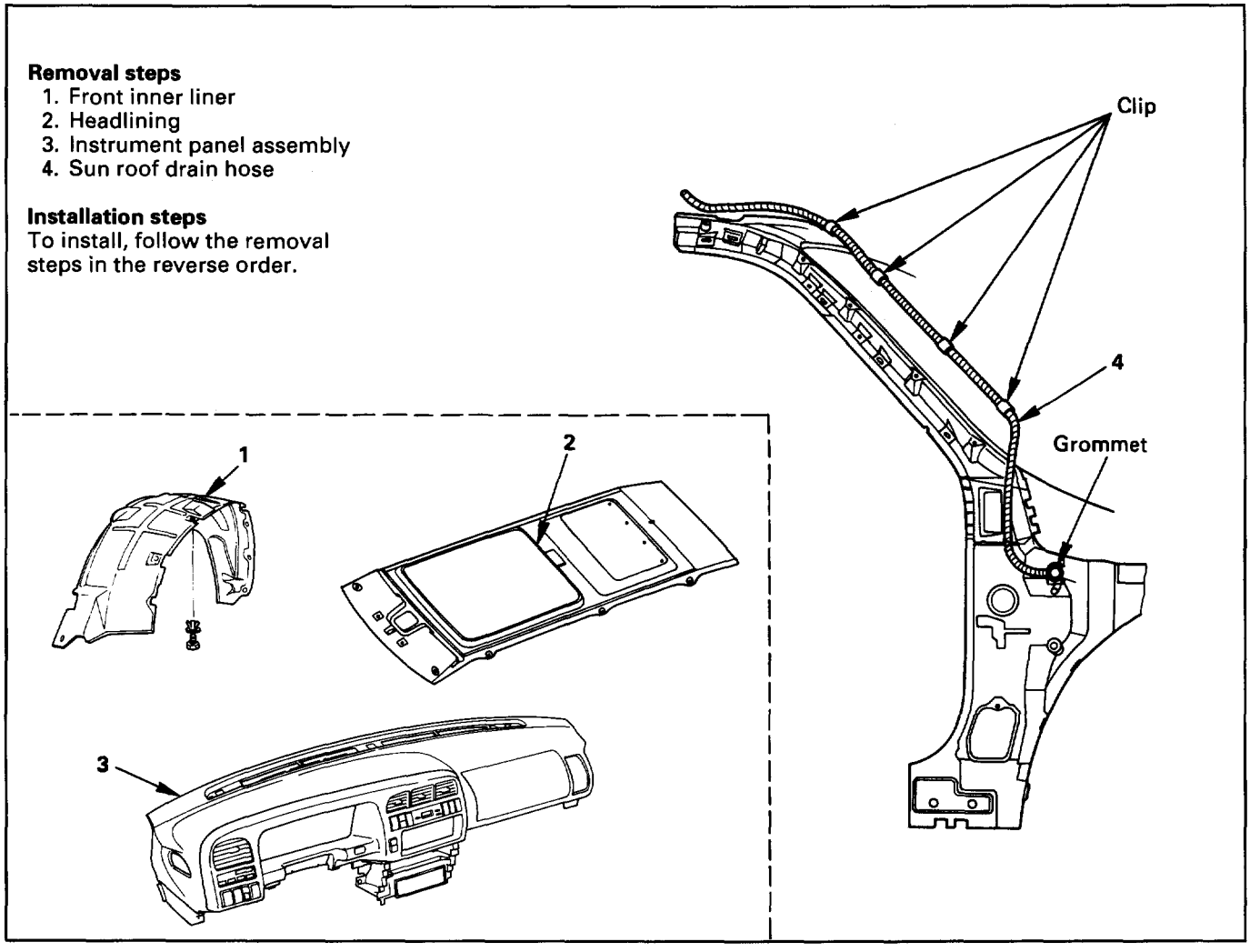

Fig. 10-247

REMOVAL

1. **Front inner liner**
2. **Headlining**
   - Refer to "HEADLINING" removal procedure in this section.
3. **Instrument panel assembly**
   - Refer to "INSTRUMENT PANEL ASSEMBLY" removal procedure in this section.
4. **Sun roof drain hose**
   - Disconnect the drain hose at the frame complete side.
   - Apply soap and water to the body panel grommet.
   - Pass the string from the sun roof frame side through the drain port side, and remove the drain hose from the hose fixing clips. Taking care not to allow the body panel grommet to be removed together with the hose, pull the drain hose only to the inside of the vehicle. (The string should be kept as it is.)

INSTALLATION

To install, follow the removal steps in the reverse order, noting the following steps.

1. Apply soap and water to the body panel grommet.
2. Install the drain hose from inside of the vehicle by utilizing, as a guide, the string passed during removal step.
3. The body panel grommet must not be twisted or caught in during installation.
4. Complate routing, avoiding extreme bends or curves.
5. After routing, install the trim with care not to allow the drain hose to be caught in.
6. Test the drain condition.
7. The protrusion of drain hose from the body panel must be within 50mm (2.0in). If it exceeds 50mm (2.0in) after correct routing, cut the leading edge so that the protrusion is within 50mm (2.0in).

REAR SIDE

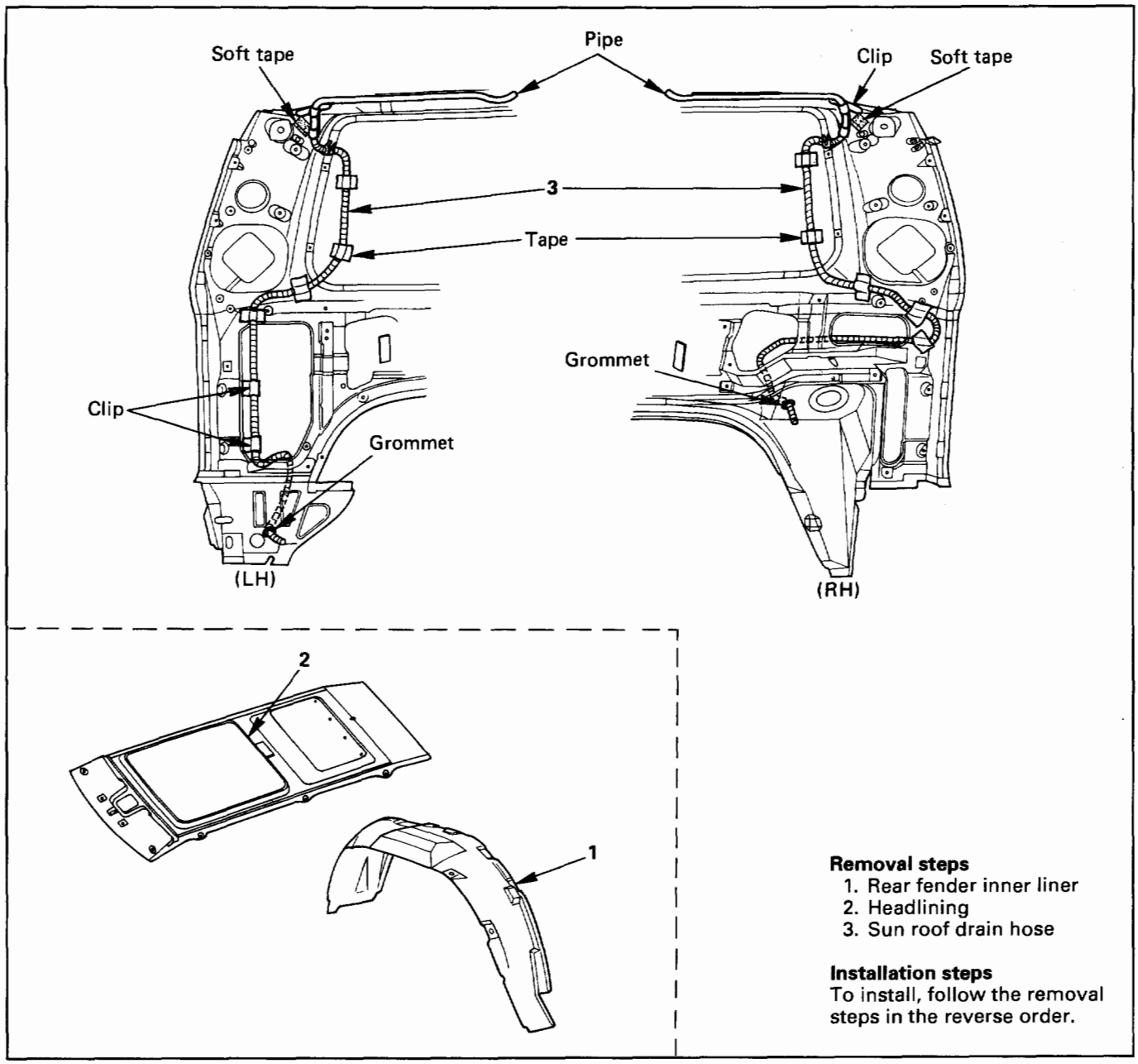

Fig. 10-248

REMOVAL

Preparation: Disconnect the battery ground cable

1. **Rear fender inner liner**
2. **Headlining**
   - Refer to "HEADLINING" in this section.
3. **Sun roof drain hose**
   - Disconnect the drive hose at the frame complete side.
   - Remove the hose fixing tapes and clips.
   - Apply soap and water to the body panel grommet.
   - Pull the drain hose to the inside of the vehicle.

INSTALLATION

To install, follow the removal steps in the reverse order, noting the following points.

1. Apply soap and water to the body panel grommet.
2. Insert the drain hose from inside of vehicle, restore routing, and fix with new soft tape and clip.
   If the grommet is removed during removal of drain hose, insert the grommet into drain hose from outside of vehicle, and install on the body panel, avoiding any twisting.
3. After installing the drain hose, install the trim while taking care not to crush the drain hose. Also, care should be taken not to allow the drain hose connected to the pipe to be caught in.
4. Test the drain condition.
5. The protrusion of drain hose from the body panel must be within 50 mm (2.0 in). If it exceeds 50 mm (2.0 in) after correct routing, cut the leading edge so that the protrusion is within 50 mm (2.0 in).

REAR AIR DEFLECTOR

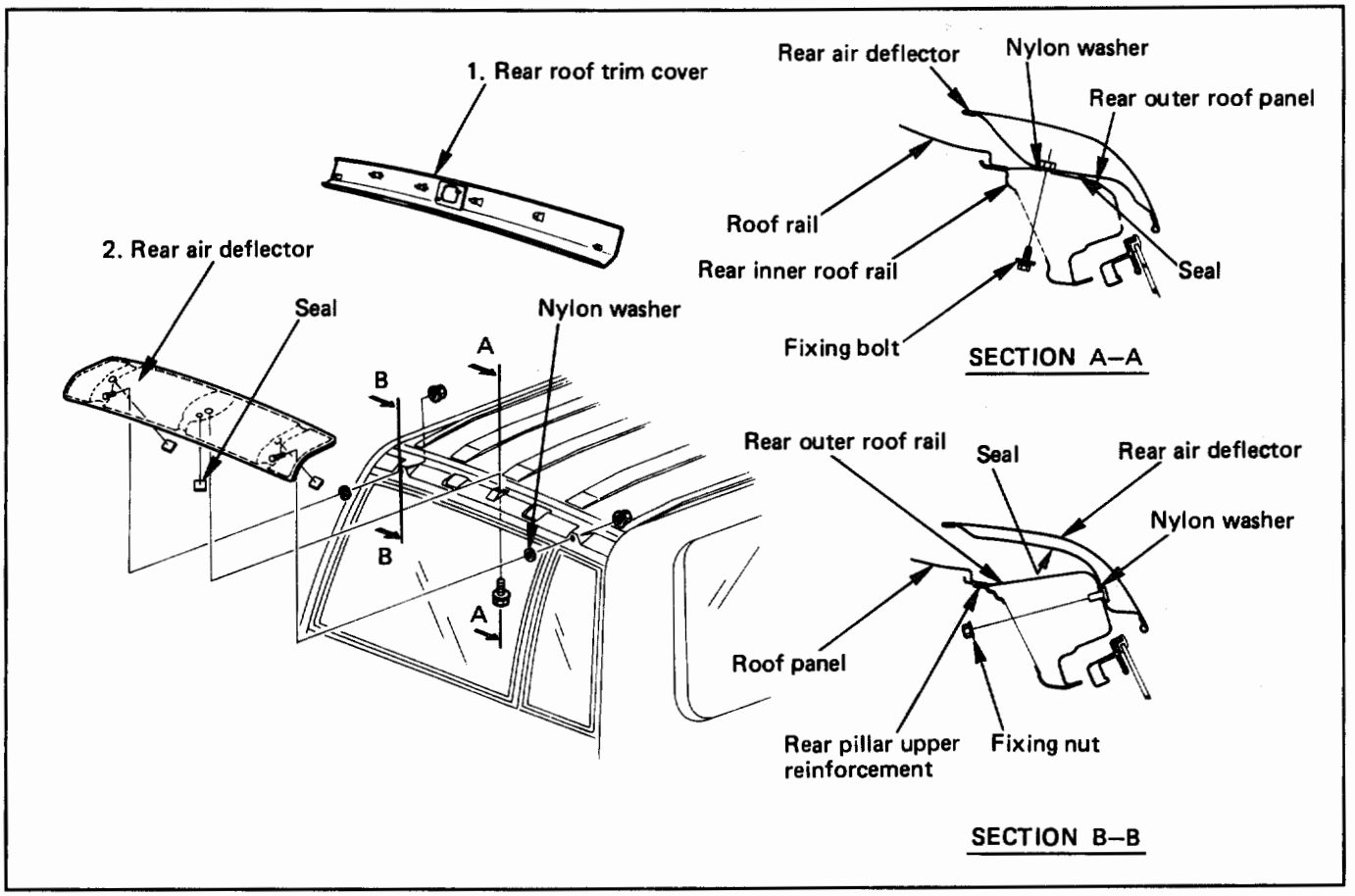

Fig. 10-249

REMOVAL

Preparation: Battery ground cable

1. **Rear roof trim cover**
   - Refer to "LUGGAGE SIDE AND QUARTER UPPER TRIM COVER" in this section.
2. **Rear air deflector**
   - Take notice of the seal and the nylon washer.

INSTALLATION

To install, follow the removal steps in the reverse order, noting the following points.

1. Use a new seal. Peel off the adhesive tape of the seal to install the seal to the air deflector drain hole. (Fig. 10-250)

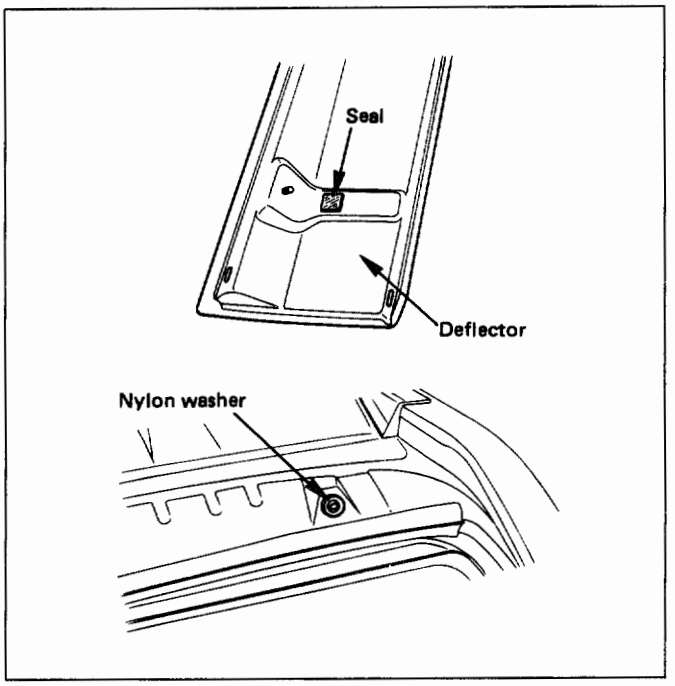

Fig. 10-250

2. Use a new nylon washer. Peel off the adhesive tape of the washer to install the nylon washer to the air deflector (Fig. 10-250).
3. Install the air deflector to the roof by referring to the specified values shown in the illustration (Fig. 10-251).

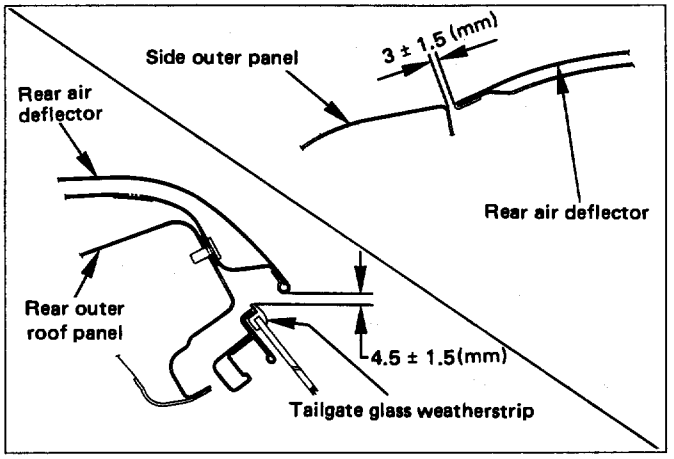

Fig. 10-251

4. Tighten the deflector fixing to the specified torque.

Torque	N·m (lb·in)	Bolt	6 (52)
		Nut	8 (69)

ROOF MOULDING

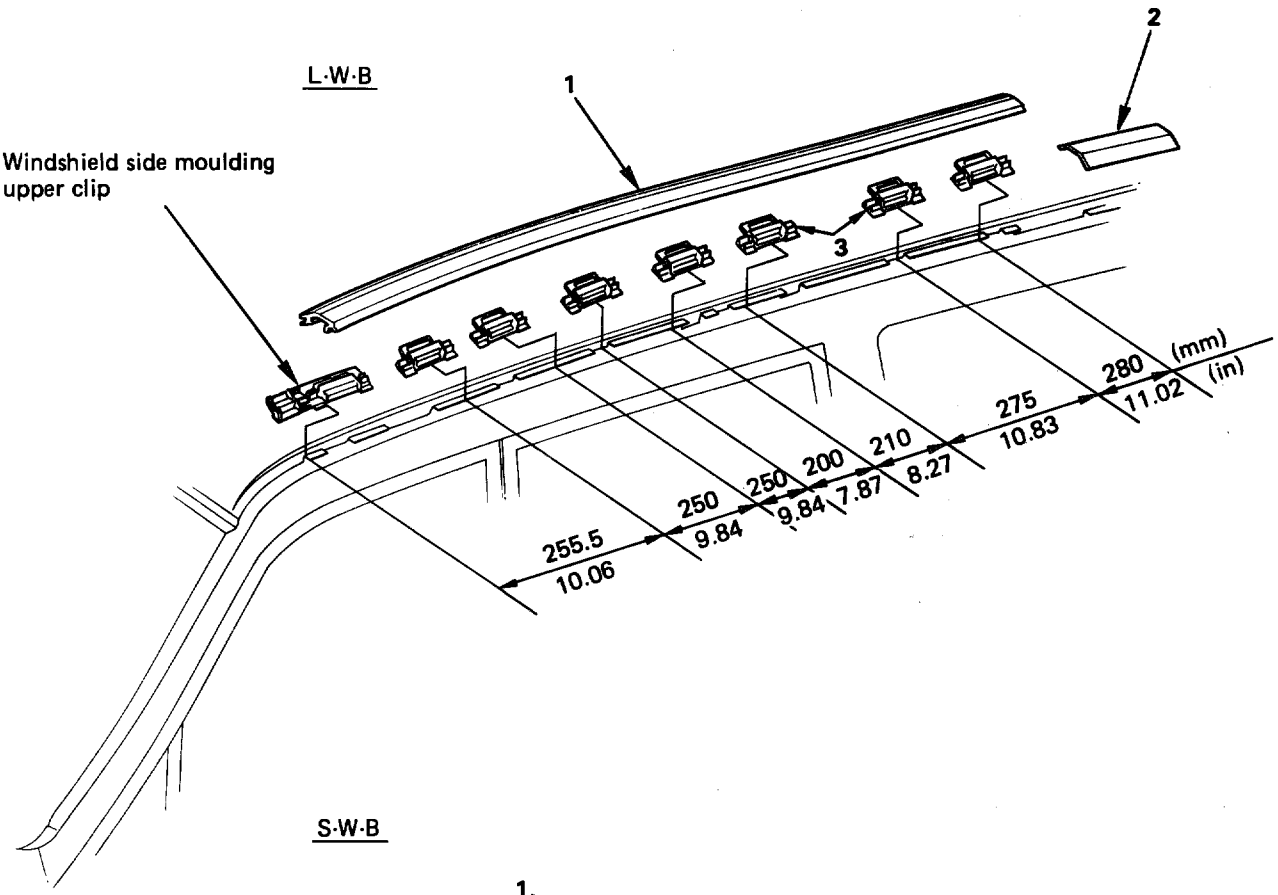

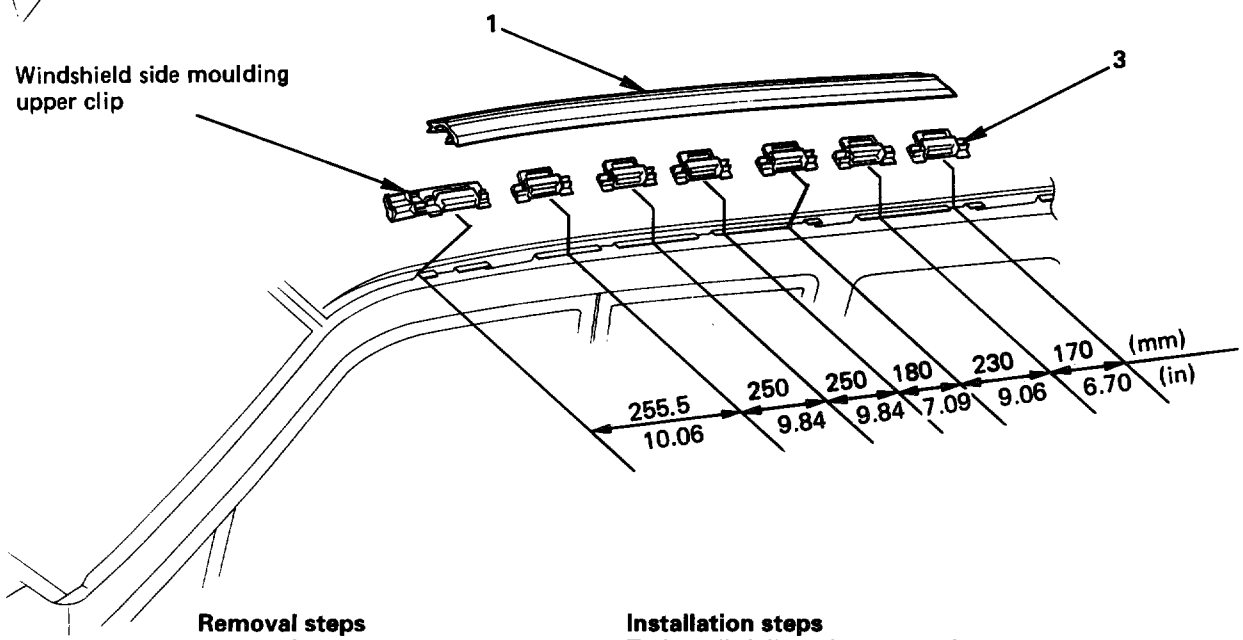

Removal steps
1. Roof moulding
2. Roof end moulding (L·W·B)
3. Moulding roof clip

Installation steps
To install, follow the removal steps in the reverse order.

Fig. 10-252

REMOVAL

Preparation: Battery ground cable

1. **Roof moulding**
2. **Roof end moulding (L·W·B)**
   - Remove the sealing adhesive and adhesive tape of the moulding from the body panel with a knife or scraper while peeling them off.
3. **Moulding roof clip**
   - Peel the adhesive tape and remove it.

INSTALLATION

3. **Moulding roof clip**
   - Clean the body panel to which the clip is attached.
   - Install the clips with adhesive tape (Fig. 10-252, 253).

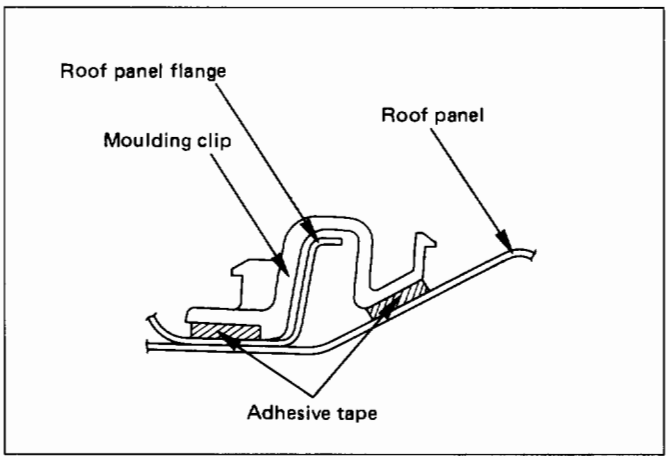

Fig. 10-253

2. **Roof end moulding (L·W·B)**
   - Clean the body panel where the roof end moulding is installed.
   - Install the roof end moulding and the rear air deflector so that the installation clearance between them is within the specified values, and fix it with the adhesive tape and sealing adhesive securely (Fig. 10-254).

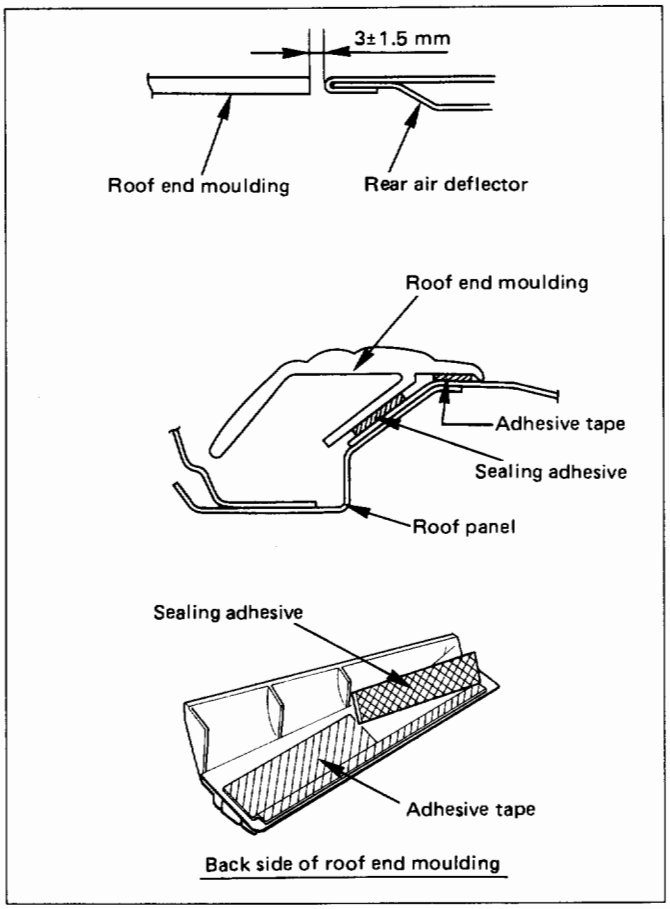

Fig. 10-254

1. **Roof moulding**
   - Assemble the windshield side moulding upper clip to the roof panel with the clip positioning rib (▨ portion) attached to the roof panel flange and assemble the roof moulding while attaching its front edge portion to the windshield side moulding. (Fig. 10-255)

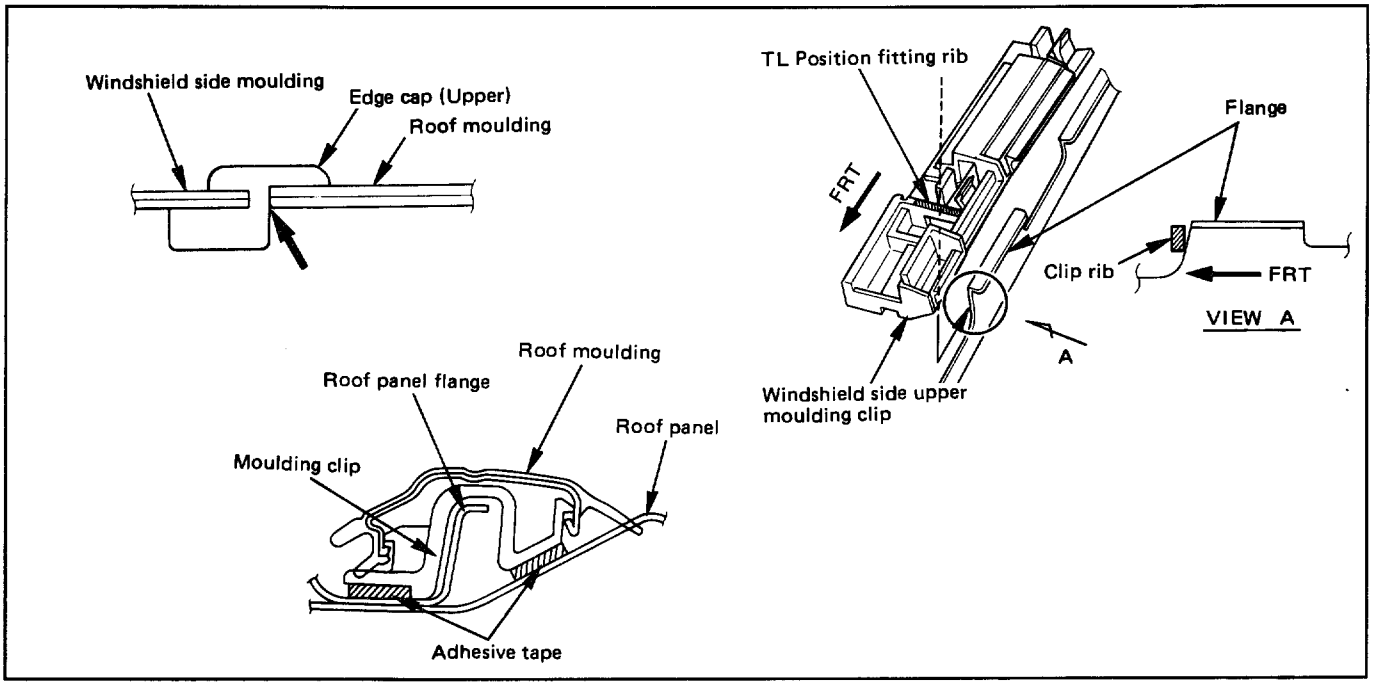
Windshield side moulding
Edge cap (Upper)
Roof moulding
TL Position fitting rib
Flange
FRT
Clip rib
FRT
VIEW A
A
Windshield side upper moulding clip
Roof moulding
Roof panel flange
Roof panel
Moulding clip
Adhesive tape

Fig. 10-255

STATIONARY GLASS

WINDSHIELD

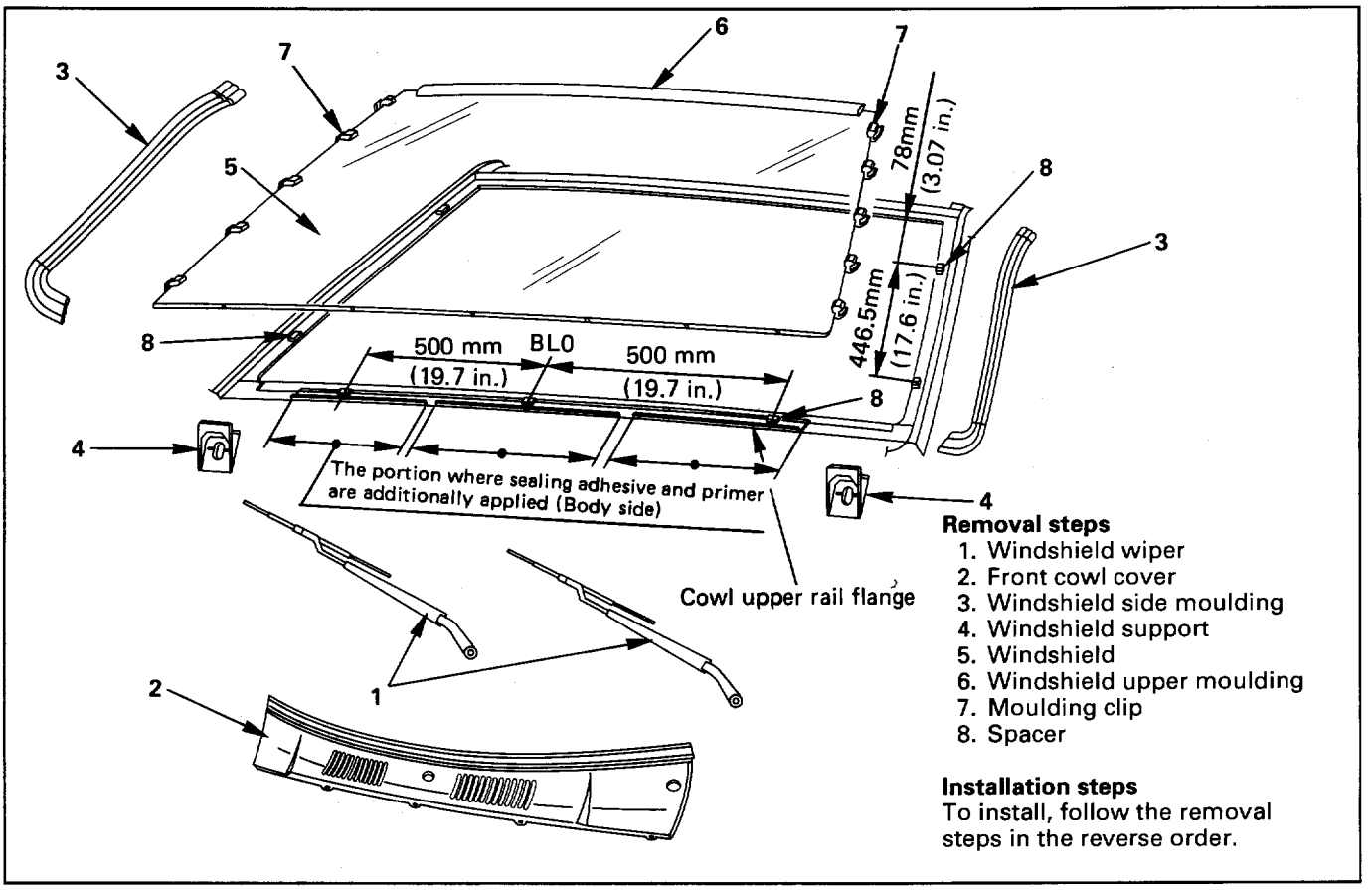

Fig. 10-256

REMOVAL

Preparation: Disconnect the battery ground cable

1. **Windshield wiper**
   - Refer to section 8 "CHASSIS ELECTRICAL".
2. **Front cowl cover**
   - Refer to section 2C "SHEET METAL".
3. **Windshield side moulding**
   - Pull the moulding out from the side moulding clip.
4. **Windshield support**
5. **Windshield**
   - Use a knife to cut through part of the adhesive caulking material.
   - Secure one end of a piece of steel piano wire (0.02 inches in diameter) to a piece of wood that can serve as a handle. (Fig. 10-257)
   - Use a pair of needle nose pliers to insert the other end of the piano wire through the adhesive caulking material at the edge of the windshield glass.
   - Secure the other end of the piano wire to another piece of wood.
   - With the aid of an assistant, carefully move the piano wire with a sawing motion to cut through the adhesive caulking material around the entire circumference of the windshield glass.
   - Clean the remaining adhesive caulking material from the area of the body which holds the windshield.

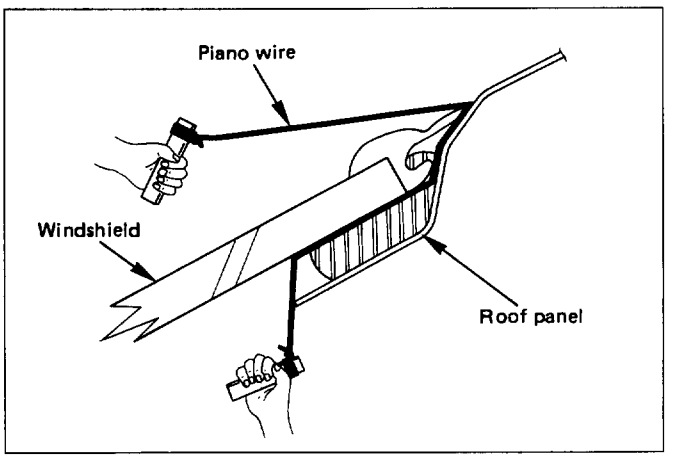

Fig. 10-257

6. **Windshield upper moulding**
   - Taking notice of the adhesive tape, peel the moulding off the windshield upper portion.
7. **Moulding clip**
8. **Spacer**

INSTALLATION

8. **Spacer**
   - Clean bonding surfaces of both the windshield and the body panel.
   - When installing the spacers, align the lower side spacer to the "R" stop of the body panel and the side spacer to the end of the body panel. Be always sure to use a new spacer (Fig. 10-256, Fig. 10-258).
   - Be absolutely sure to apply glass primer to the windshield and body primer to body panel as shown in the figure (Fig. 10-261).

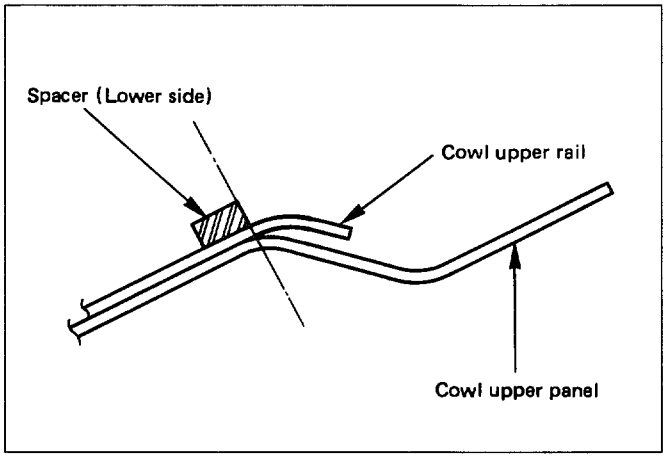

Fig. 10-258

7. **Moulding clip**
   - Install the moulding clips to the fixed position of the windshield (Fig. 10-259).
   - Always use new moulding clips.
6. **Windshield upper moulding (Fig. 10-260)**
   - Peel off the adhesive tape and install the moulding to the fixed position of the windshield.
   - Always use new upper moulding.
5. **Windshield (Fig. 10-261)**
4. **Windshield support (Fig. 10-262)**
   - Apply a sealing adhesive to the circumference of windshield as in the figure.
   - Apply the sealing adhesive to the frange portion of the cowl upper rail.
   - Adjust the gap clearance of windshield.
   - Install the windshield to the body panel by applying pressure.
   - Cure the adhesive at a temperature of 20 ~ 30°C (68 ~86°F) for 24 hours.
   - Check that the windshield does not leak water. (Fig. 10-263)

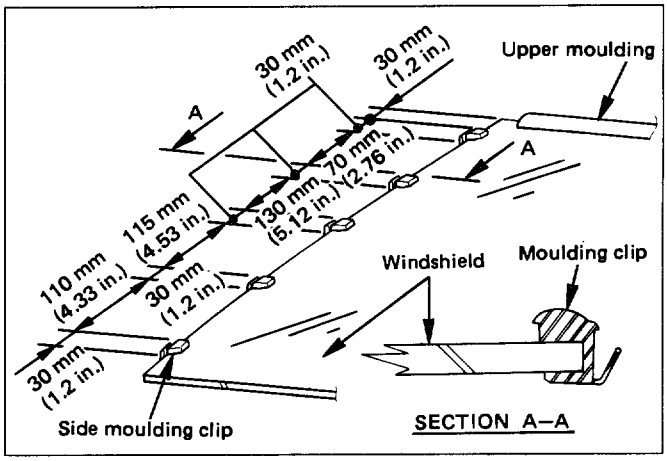

Fig. 10-259

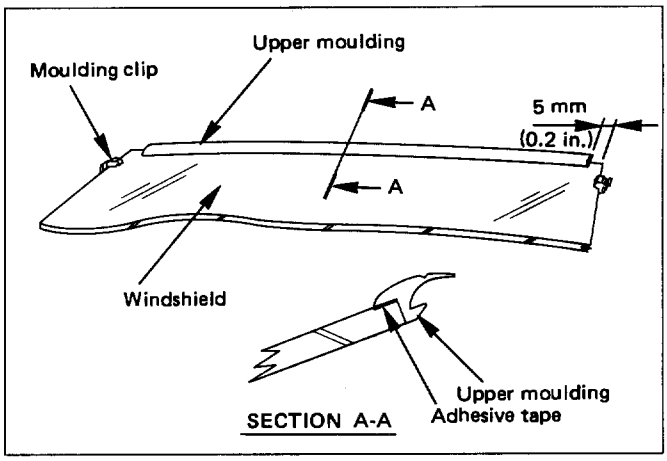

Fig. 10-260

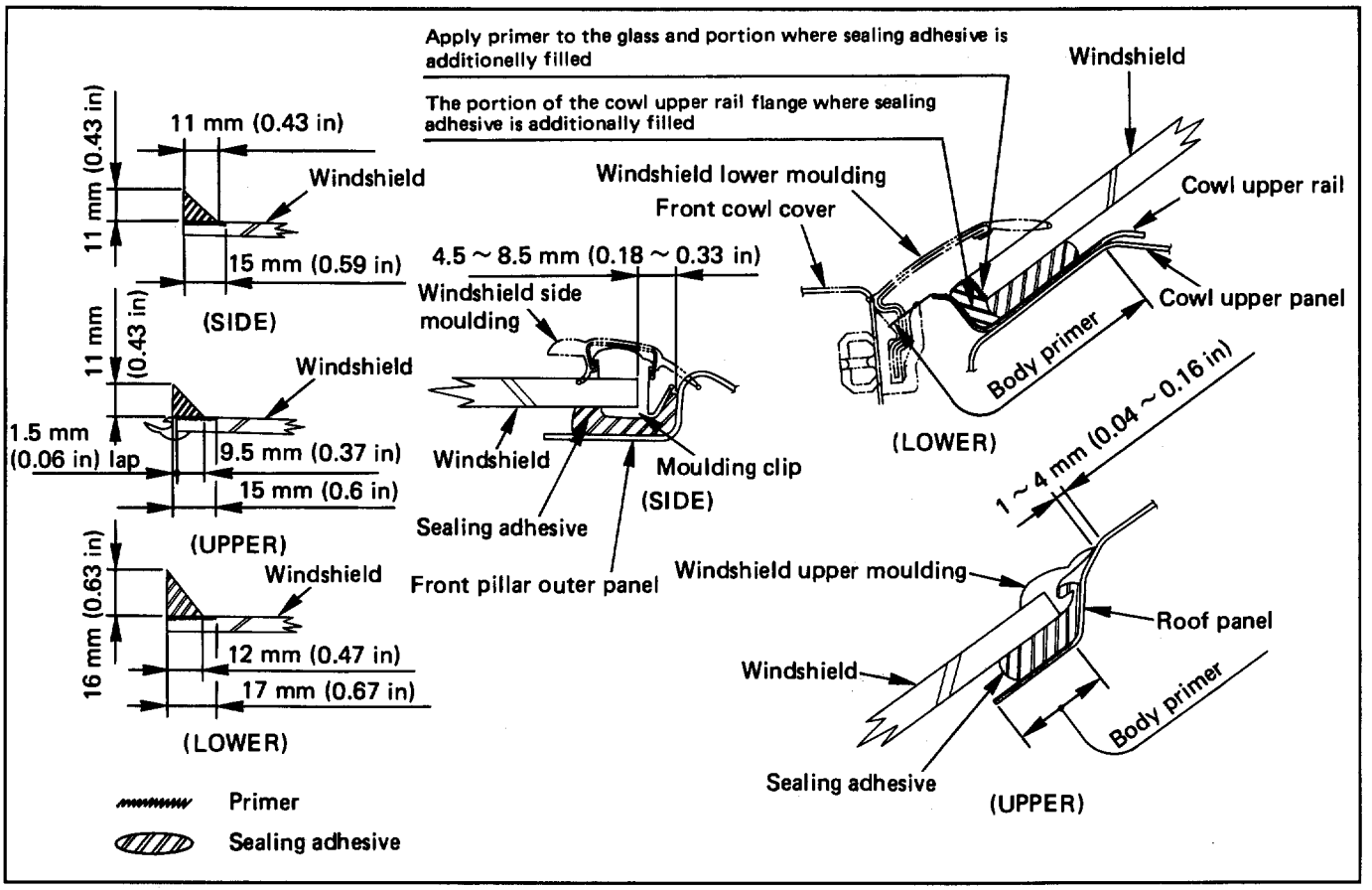

Fig. 10-261

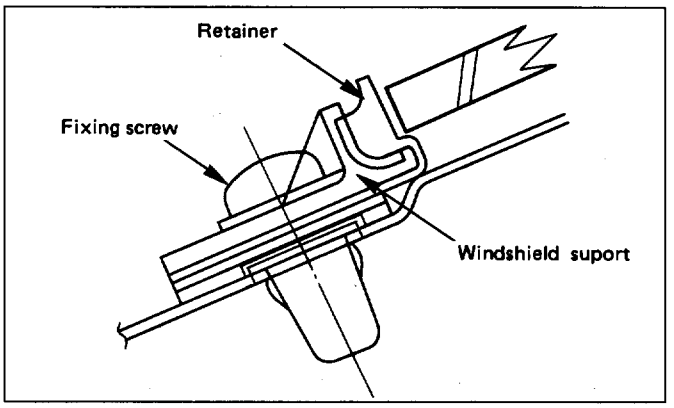

Fig. 10-262

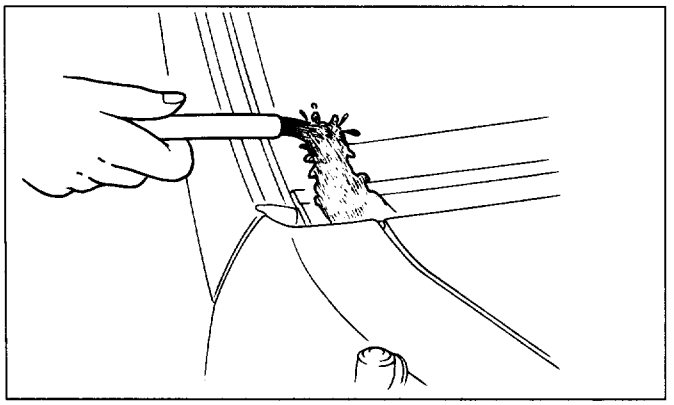

Fig. 10-263

3. **Windshield side moulding**
   - Insert the moulding into the moulding clip. (Fig. 10-264)
   - Be careful not to damage the side moulding when installing it.
2. **Front cowl cover**
1. **Windshield wiper**

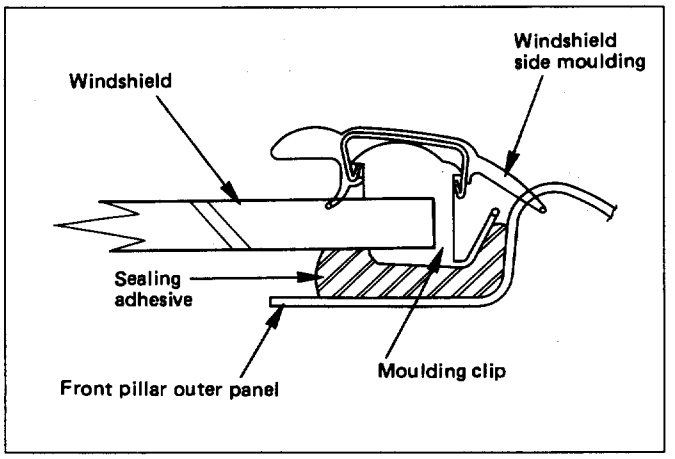

Fig. 10-264

REAR QUARTER SIDE GLASS

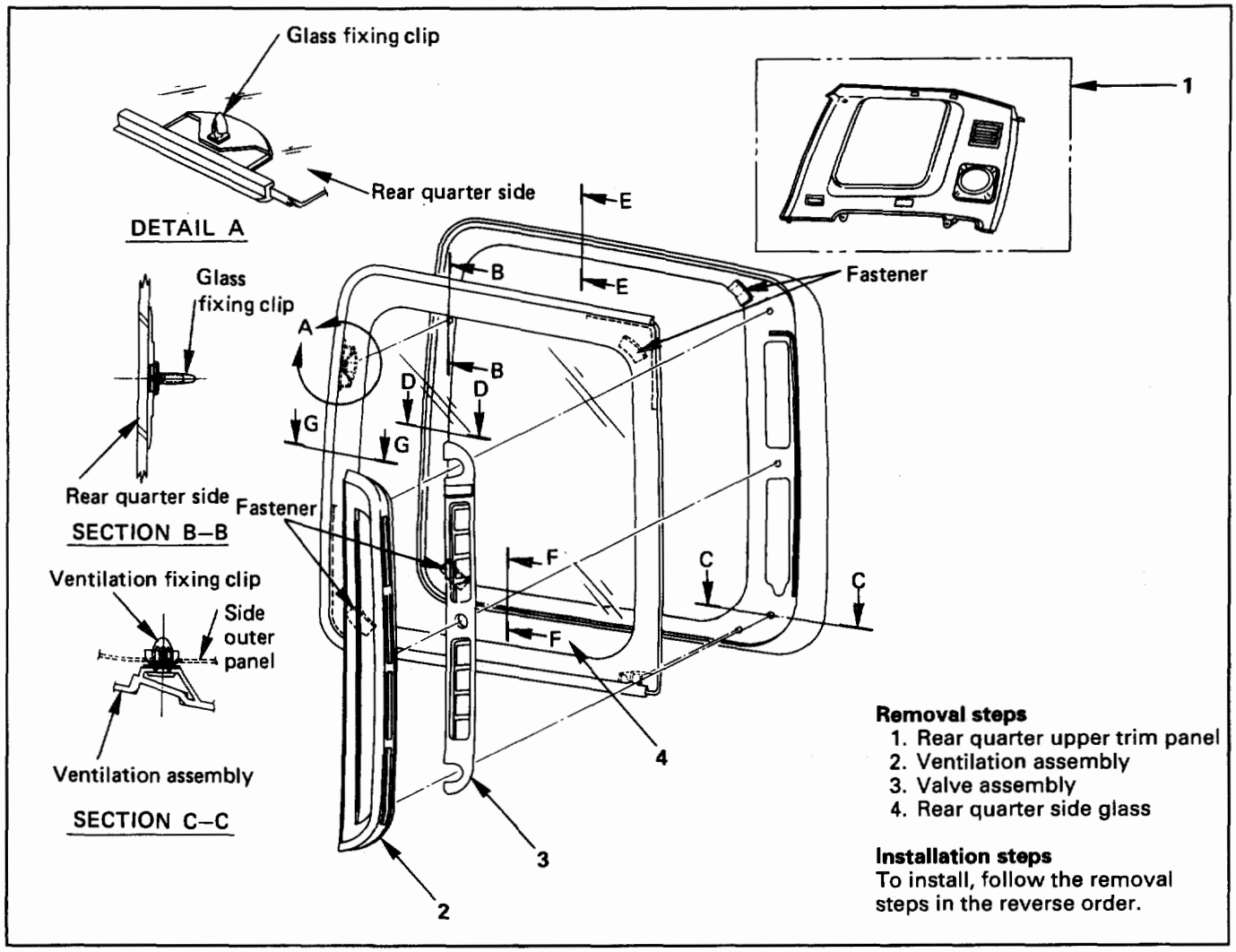

Fig. 10-265

REMOVAL

Preparation: Disconnect the battery ground cable

1. **Rear quarter upper trim panel**
   - Refer to "INTERIOR TRIM PANELS" in this section.
2. **Ventilation assembly**
3. **Valve assembly**
   - Refer to "VENTILATION ASSEMBLY" in this section.
4. **Rear quarter side glass**
   - Refer to "WINDSHIELD" removal procedure in this section.

INSTALLATION

4. **Rear quarter side glass**
   - Clean bonding surfaces of both the glass and the body panel.
   - Install the fasteners to the fixed positions of the glass and the body panel (Fig. 10-266).
   - Always use new fasteners.
   - Be absolutely sure to apply glass primer to the side glass (Fig. 10-267).
   - Apply PVC primer to the Ⓐ clip portion (Fig. 10-268).
   - Apply a sealing adhesive to the glass circumference as shown in the figure (Fig. 10-267).
   - Insert fixing clip on side glass into the body panel, push the side glass against the body panel, and bond them.
   - Cure the adhesive at a temperature of 20 ~ 30°C (68 ~ 86°F) for 24 hours.
   - Check that the rear quarter side glass does not leak water.

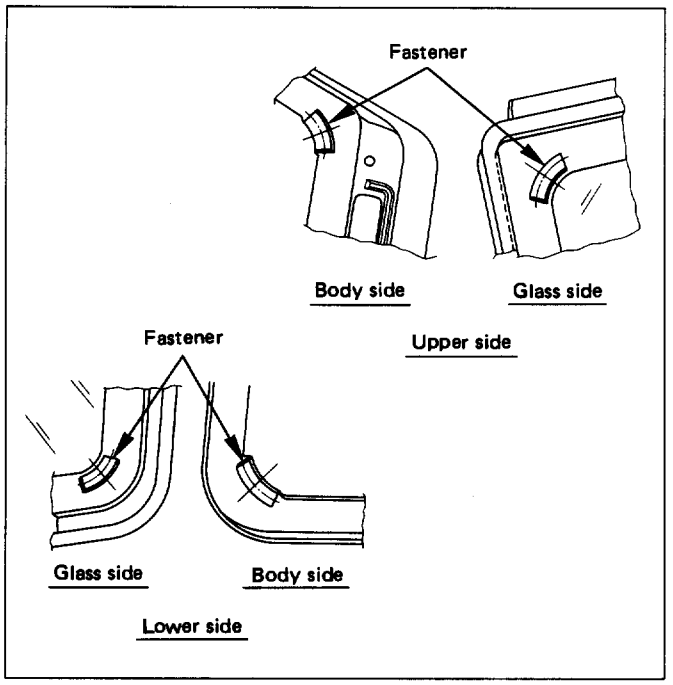

Fig. 10-266

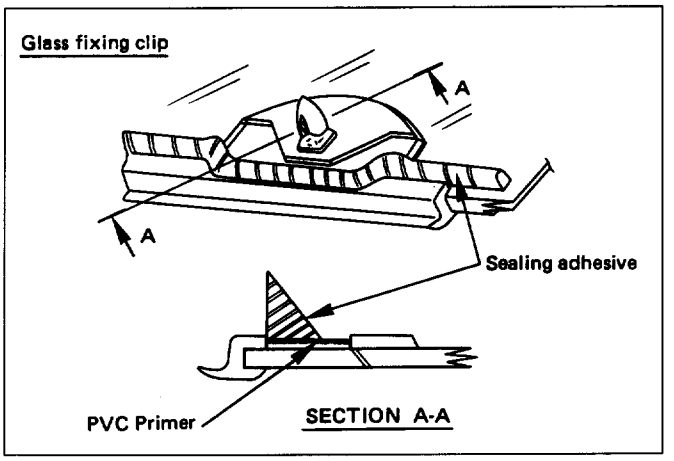

Fig. 10-268

3. **Valve assembly**
2. **Ventilation assembly**
1. **Rear quarter upper trim panel**

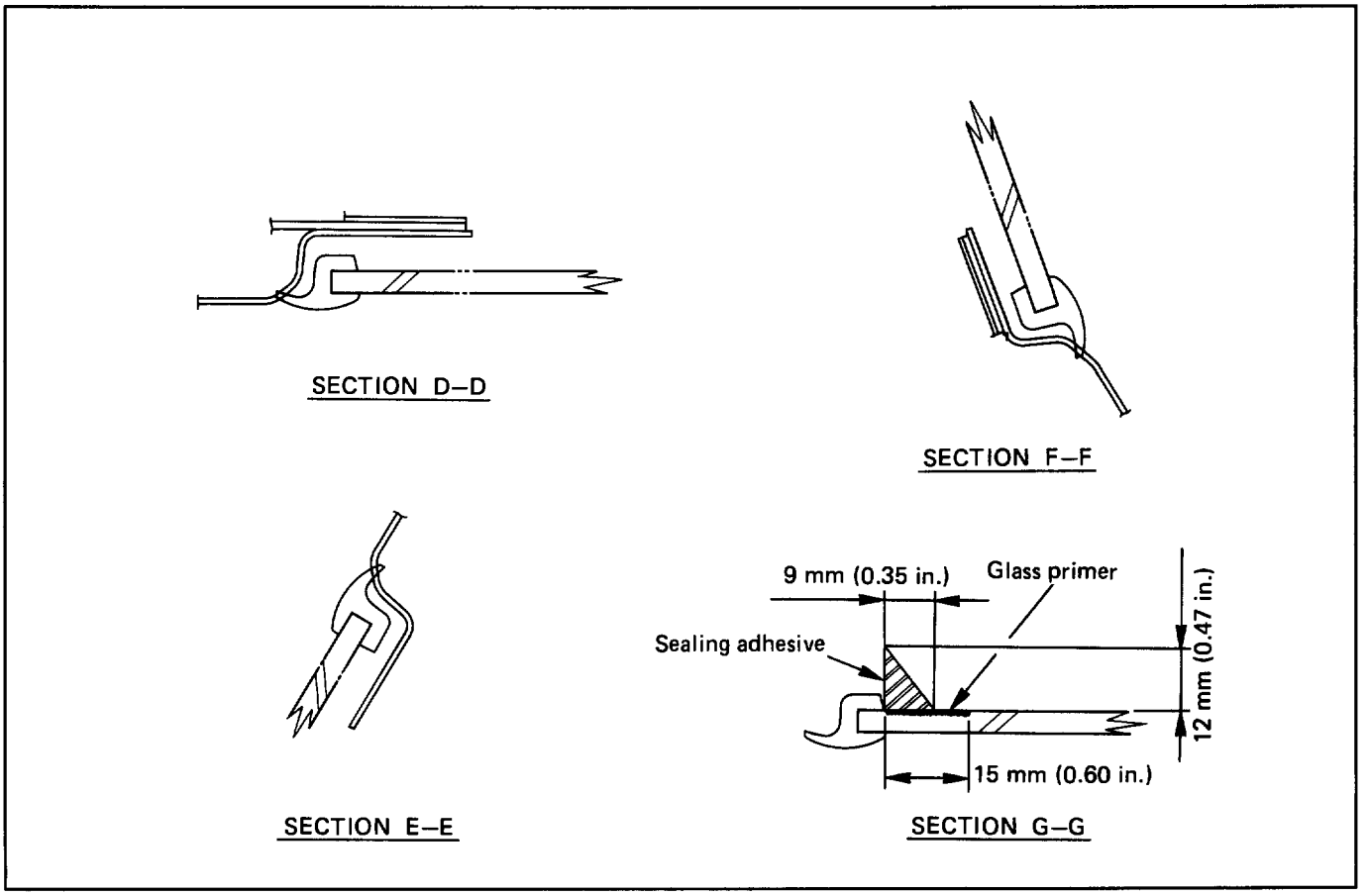

Fig. 10-267

TAILGATE GLASS

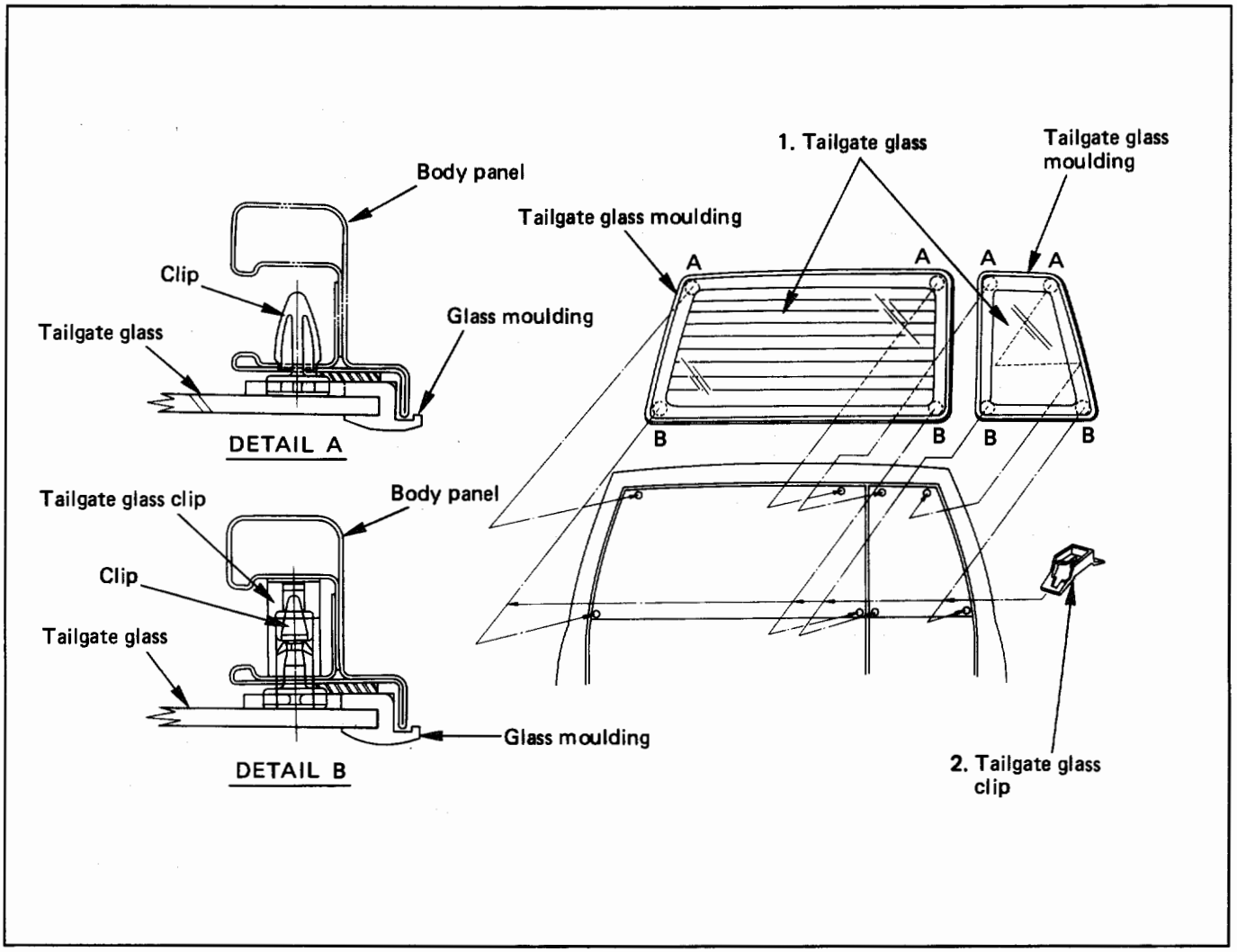

Fig. 10-269

REMOVAL

Preparation: Battery ground cable
Tailgate trim panel
Tailgate sash trim cover (RH only)
Tailgate frame cover
- Refer to "REAR END" section in this section.

1. **Tailgate glass (Fig. 10-270)**
   - Refer to "WINDSHIELD" removal procedure in this section.
2. **Tailgate glass clip**

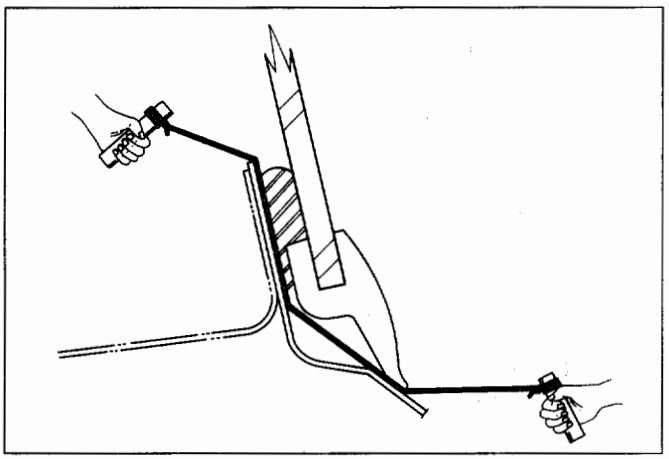

Fig. 10-270

INSTALLATION

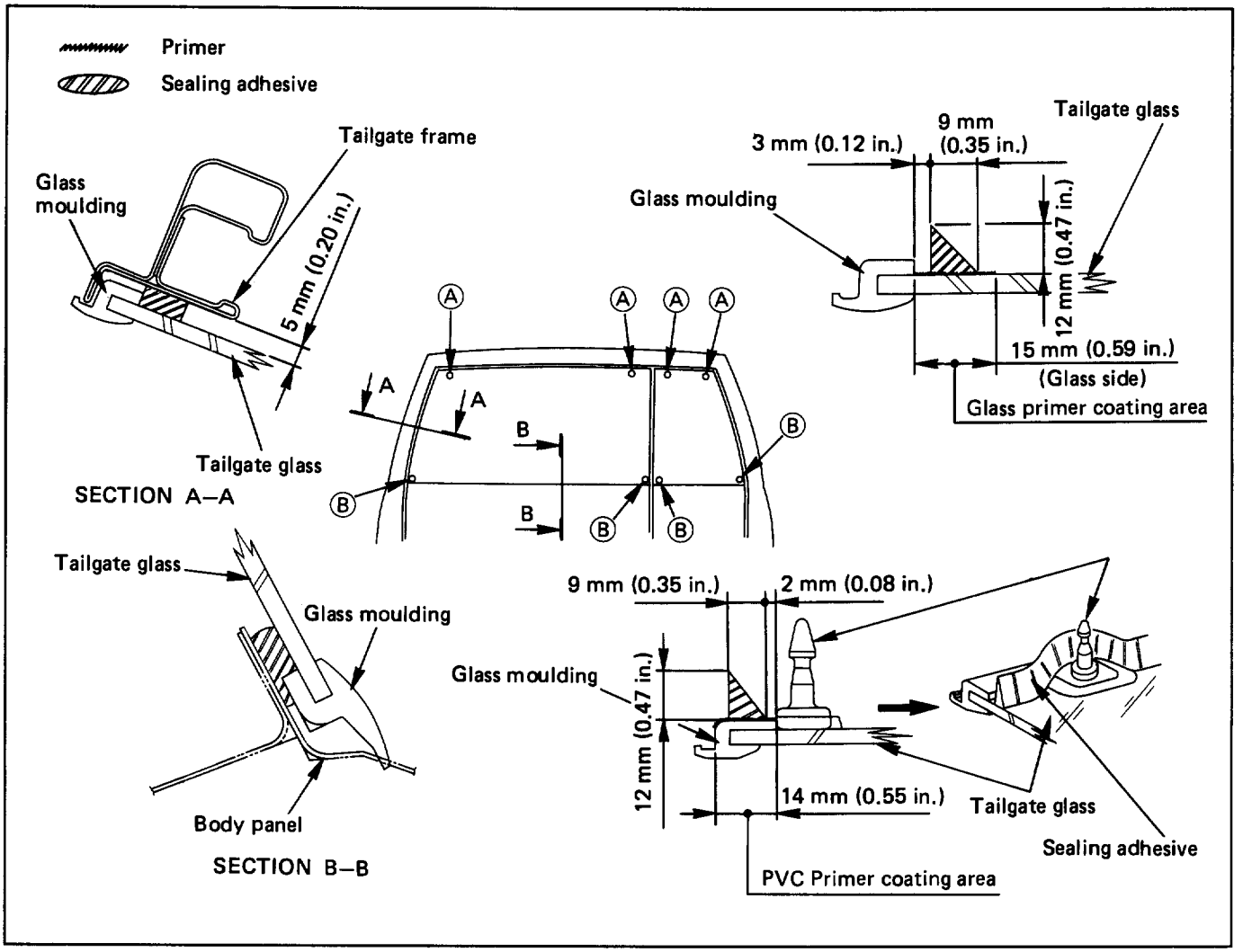

Fig. 10-271

1. **Tailgate glass clip (Fig. 10-272)**
2. **Tailgate glass (Fig. 10-271)**
   - Clean bonding surfaces of both the tailgate glass and the tailgate panel.
   - Be absolutely sure to apply glass primer to tailgate glass and PVC primer to glass moulding as in the figure.
   - Apply a sealing adhesive to the circumference of the tailgate glass as shown in the figure.
   - Insert the clip of the tailgate glass Ⓐ portion into the tailgate panel hole to position the glass.
   - Install the tailgate glass clip to the clip of the tailgate glass Ⓑ portion while sliding it, and bond the glass to the tailgate panel by applying pressure.
     Always use new tailgate glass clips.
   - Cure the bonding at a temperature of 20 ~ 30°C (68 ~ 86°F) for 24 hours.
   - Check that the tailgate glass does not leak water.

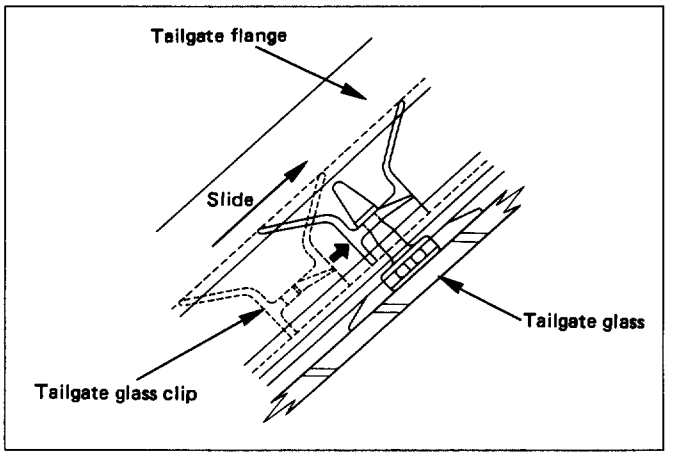

Fig. 10-272

CHILD RESTRAINT

CHILD SEAT TETHER ANCHOR BRACKET

Plastic plug is provided at three places on the luggage floor panel. Remove a center one of the plugs from the floor panel. Install the bracket to the hole where the plug is removed.
Alternatively, the bracket may be installed to the right-hand or left-hand plug hole.

INSTALLATION (Fig. 10-273)

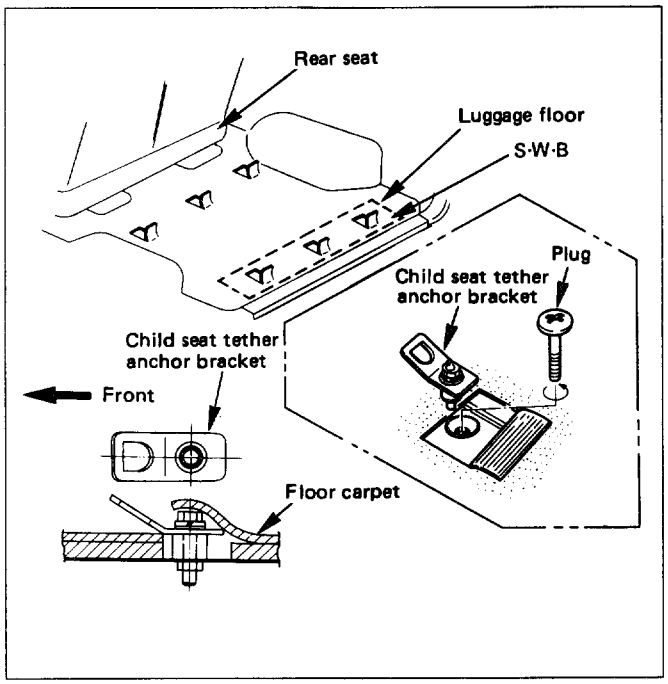

Fig. 10-273

1. Turn the plug counterclockwise to remove it.
2. Install the bracket such that its tether belt hook hole is facing to the front of the vehicle.
3. Tighten the fixing bolt to the specified torque.

Torque	N·m (lb·ft)	20 (14)

KEY

KEY CODING

KEY USAGE AND IDENTIFICATION (Fig. 10-274, Fig. 10-275)

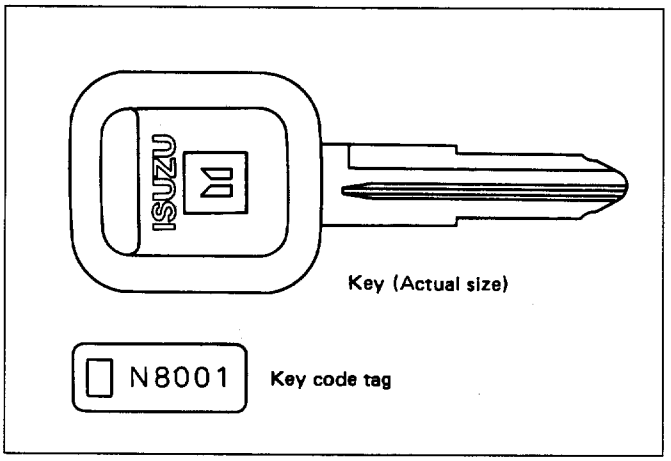

Fig. 10-274

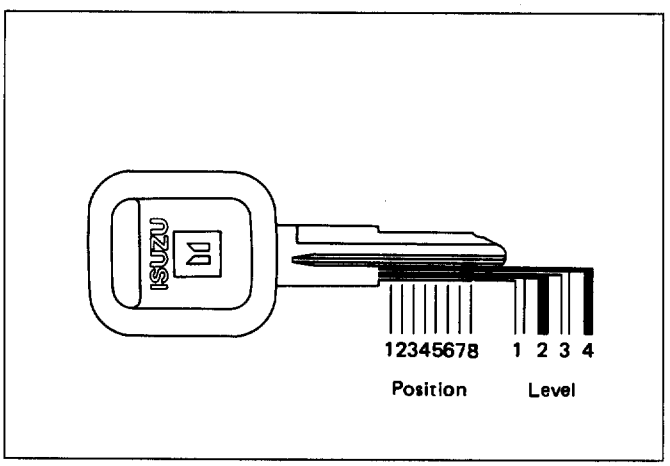

Fig. 10-275

One key is used for the ignition, door, and tailgate lock cylinders. The keys are cut on both edges to make them reversible.

Key identification is obtained from the five character key code stamped on the key code tag. From this key code, the key code cutting combination can be determined from a code list (available to owners of key cutting equipment from suppliers).

If key codes are not available from records or tags, the key code can be obtained from the right hand door lock cylinder (if lock has not been replaced). Lock cylinders supplied by the factory as service parts are unmarked.

If the original key is available, the key code cutting combination can be determined by laying the key on the diagram shown in Fig. 10-275.

KEY STYLES

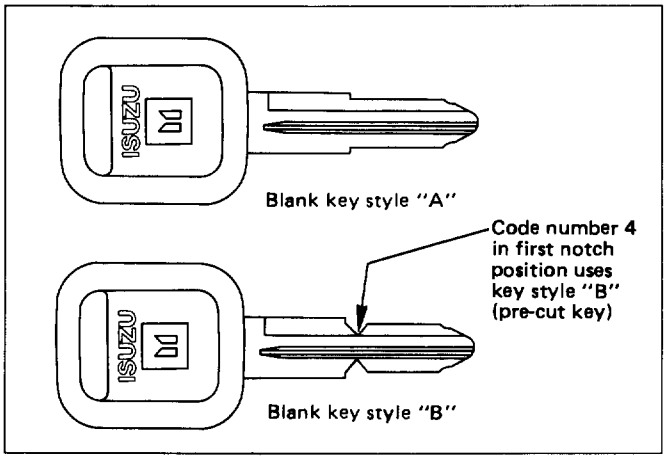

Fig. 10-276

The keys come in styles A or B, depending on the key code cutting combination. When the first position in the combination is a 1, 2, or 3, Style A is used. When the first position is a 4, Style B (factory pre-cut key) is used.

MAIN DATA AND SPECIFICATIONS

TORQUE SPECIFICATIONS

N·m (lb·ft)

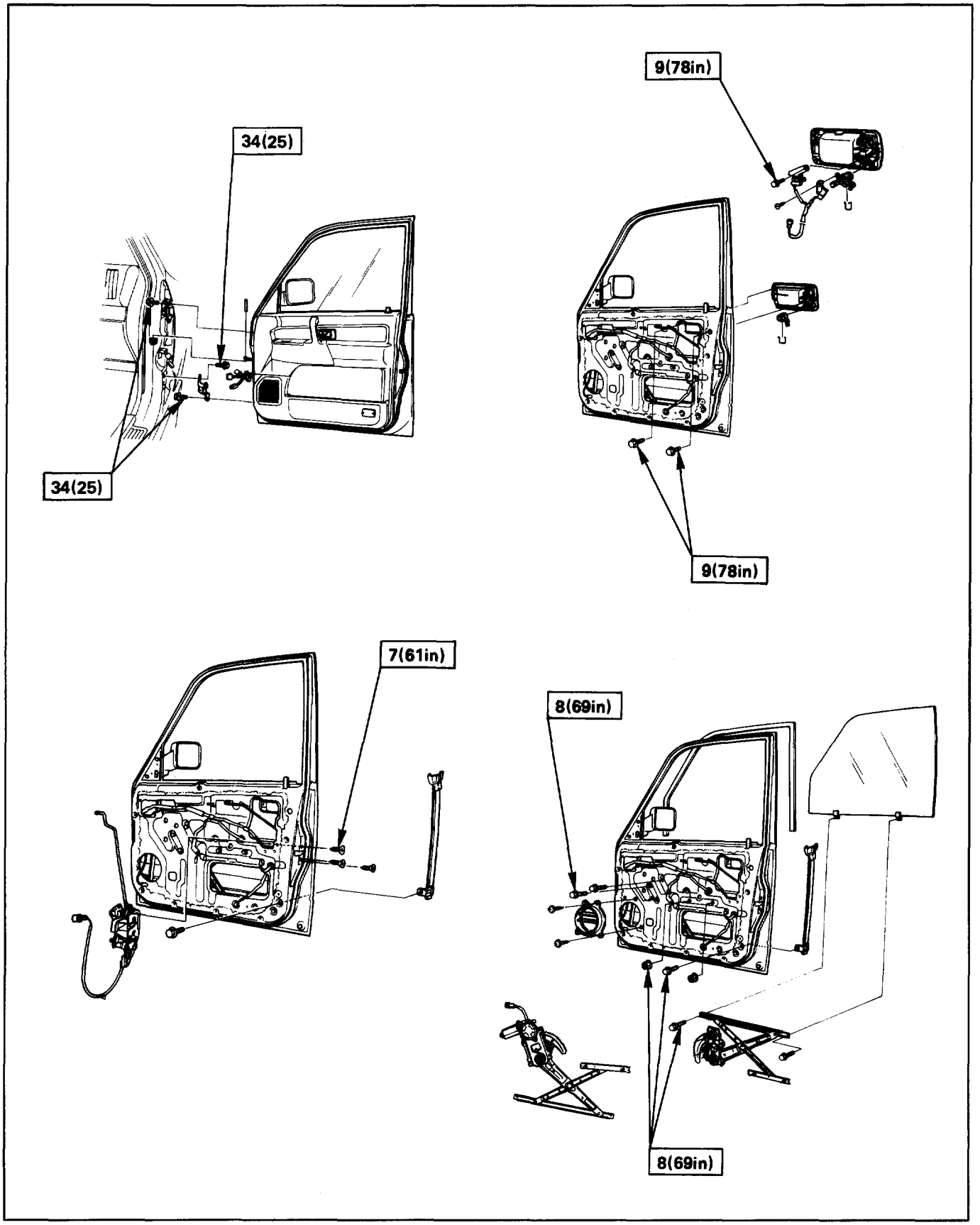

Fig. 10-277

N·m (lb·ft)

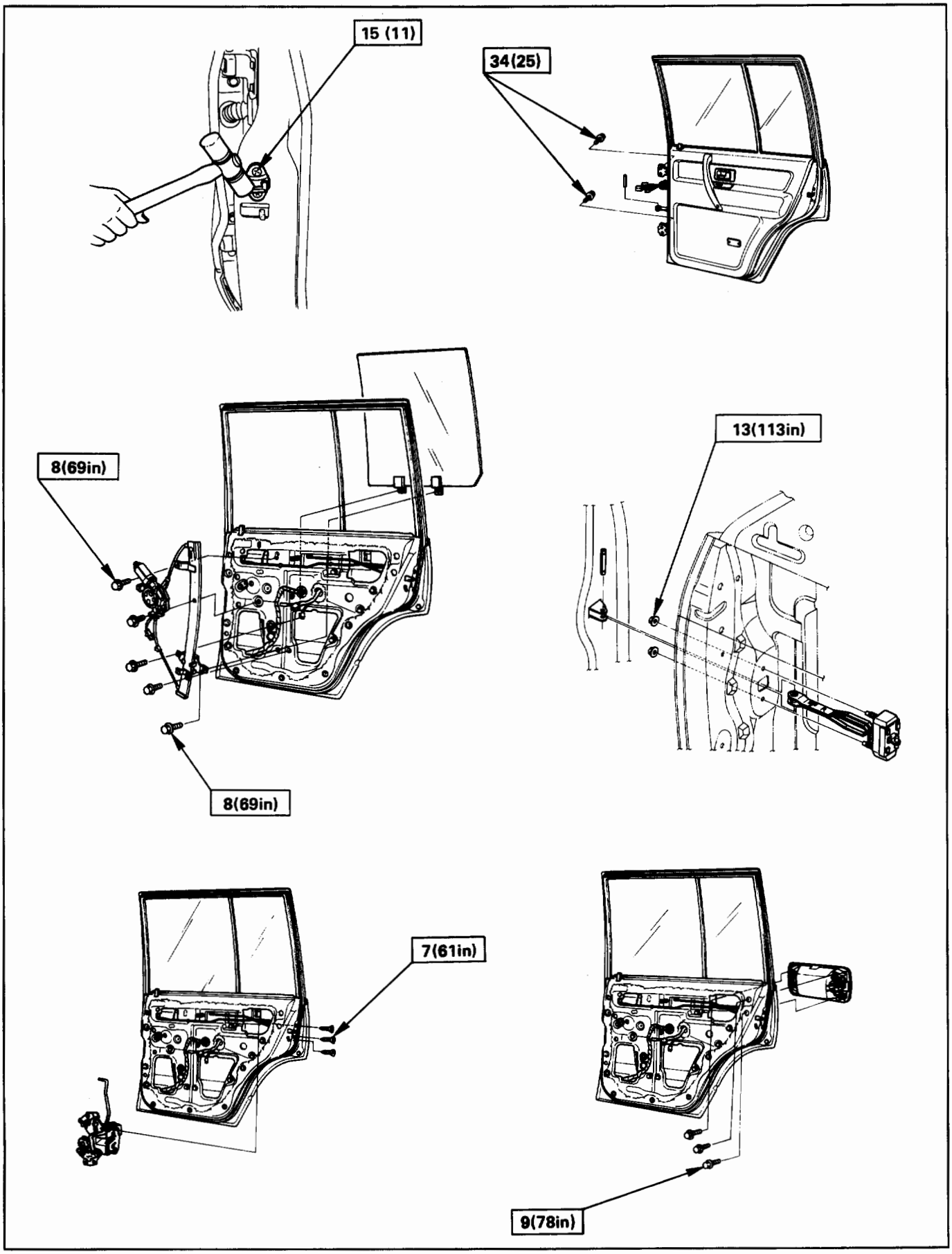

Fig. 10-278

N·m (lb·ft)

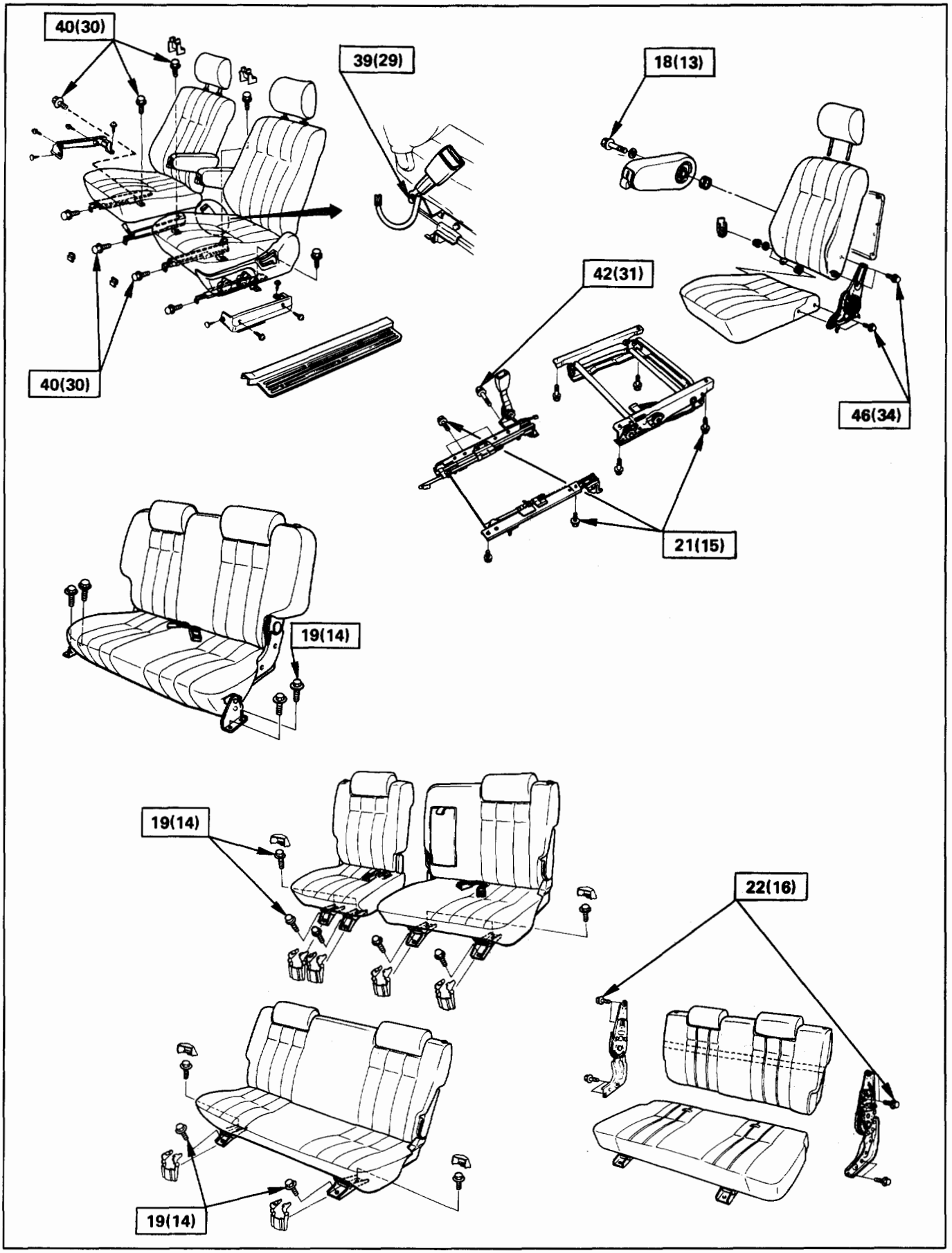

Fig. 10-279

N·m (lb·ft)

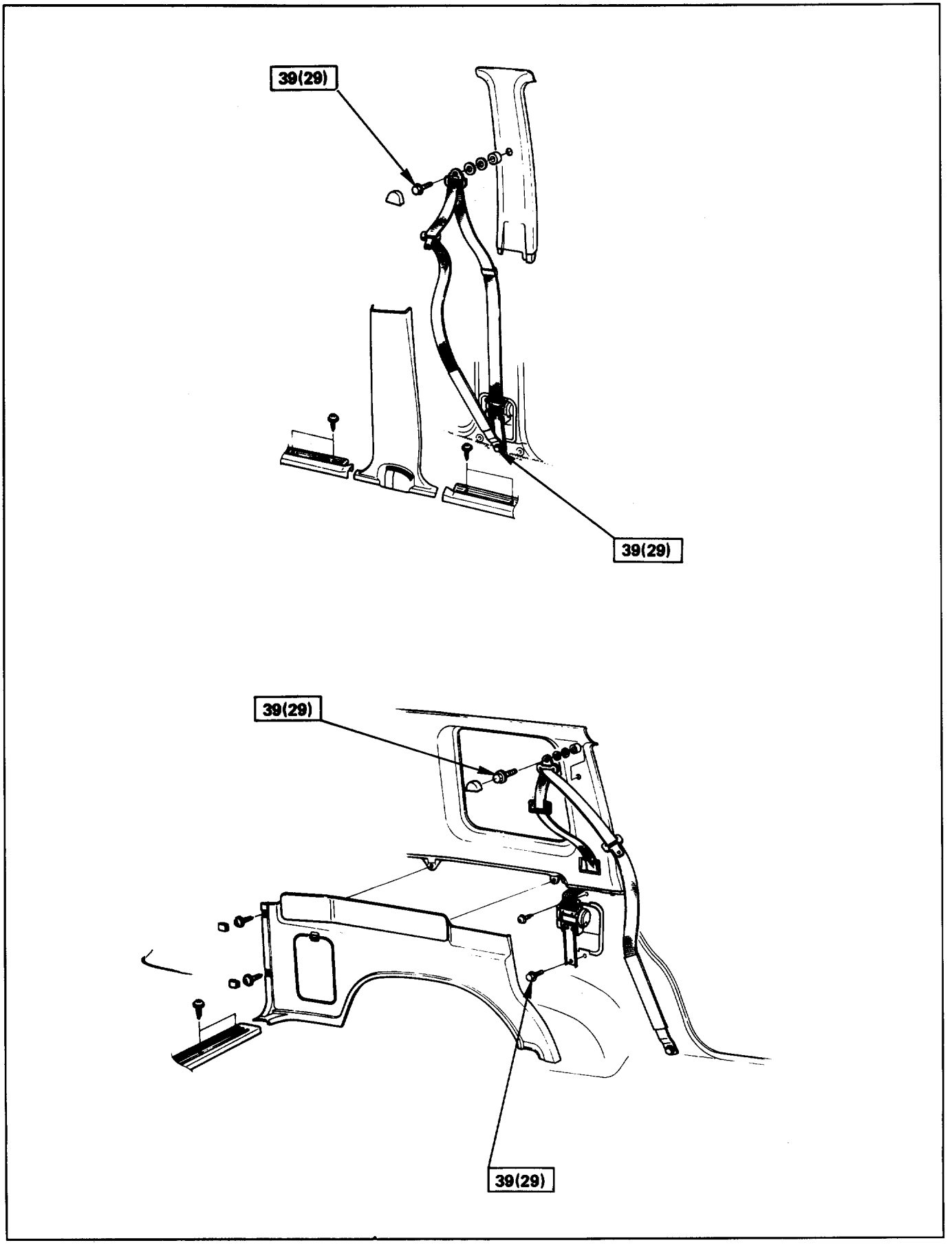

Fig. 10-280

N·m (lb·ft)

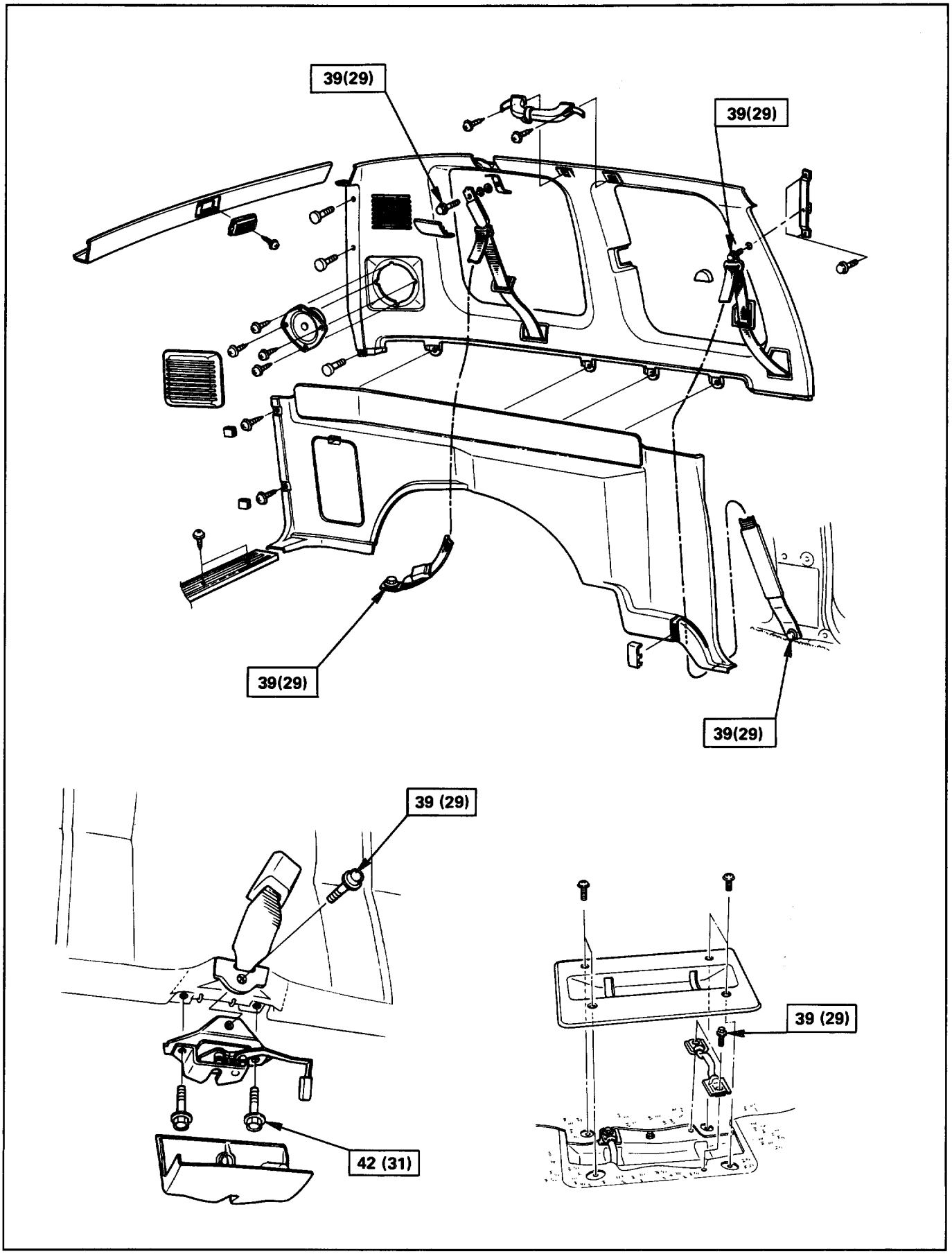

Fig. 10-281

N·m (lb·ft)

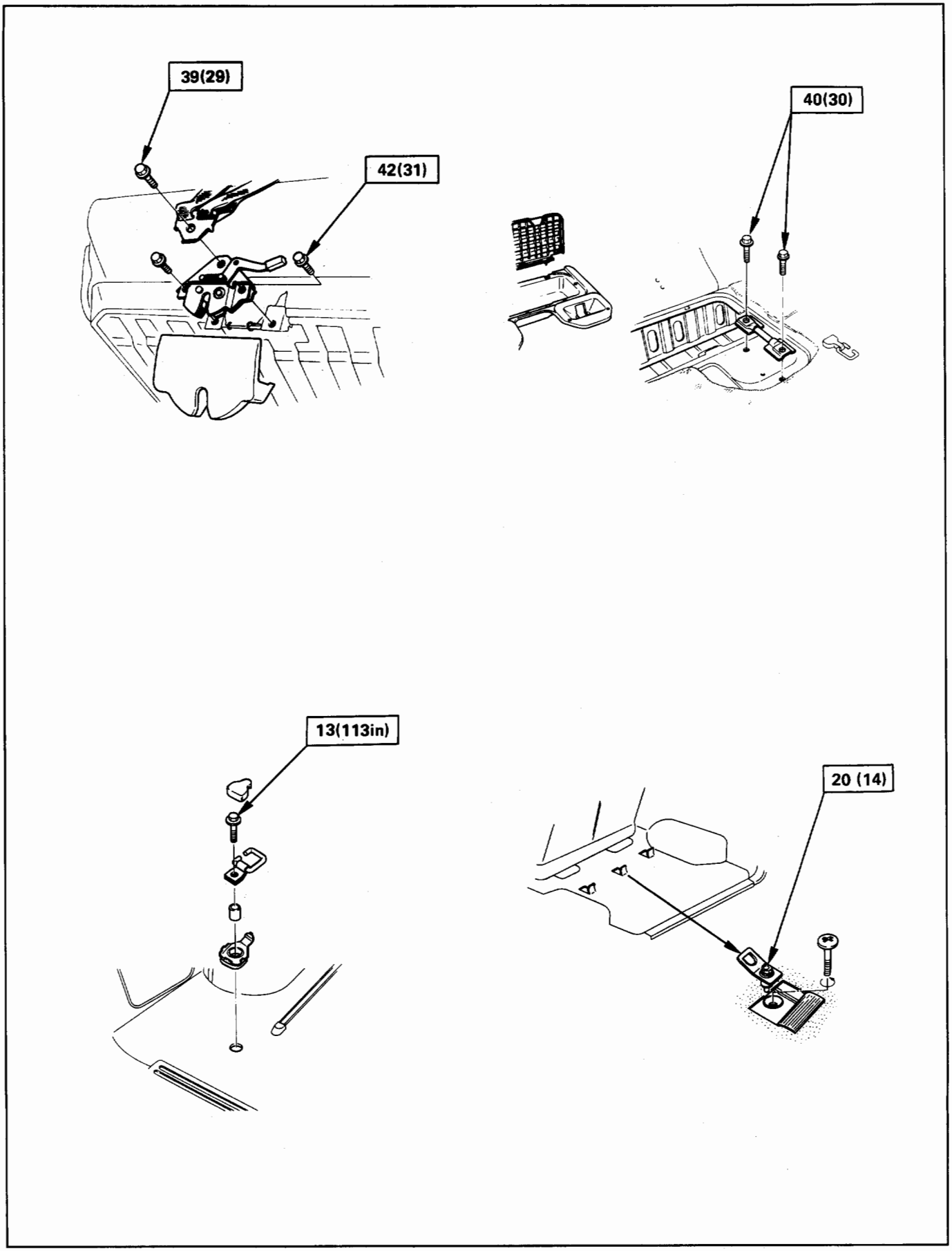

Fig. 10-282

N·m (lb·ft)

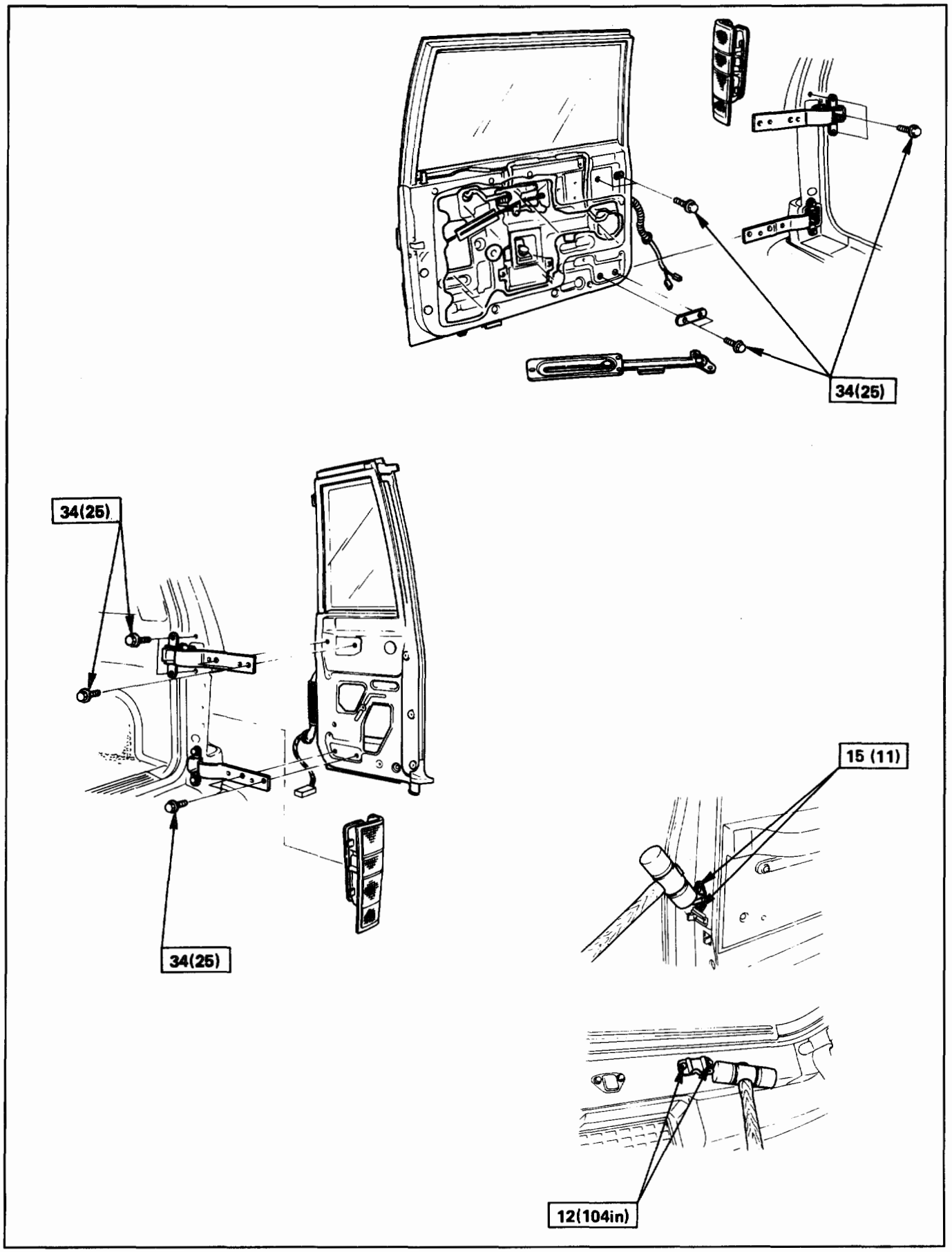

Fig. 10-283

N·m (lb·ft)

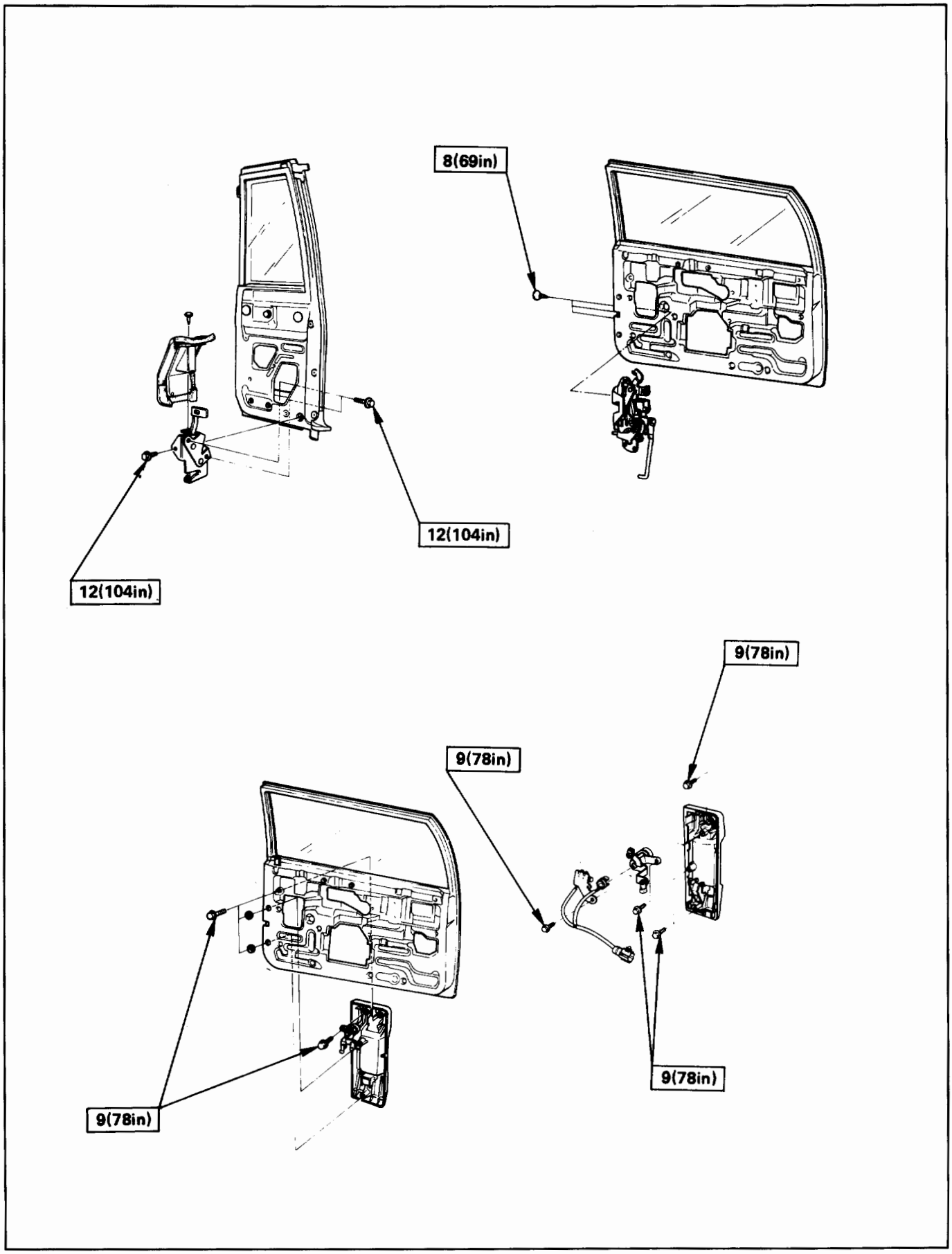

Fig. 10-284

N·m (lb·ft)

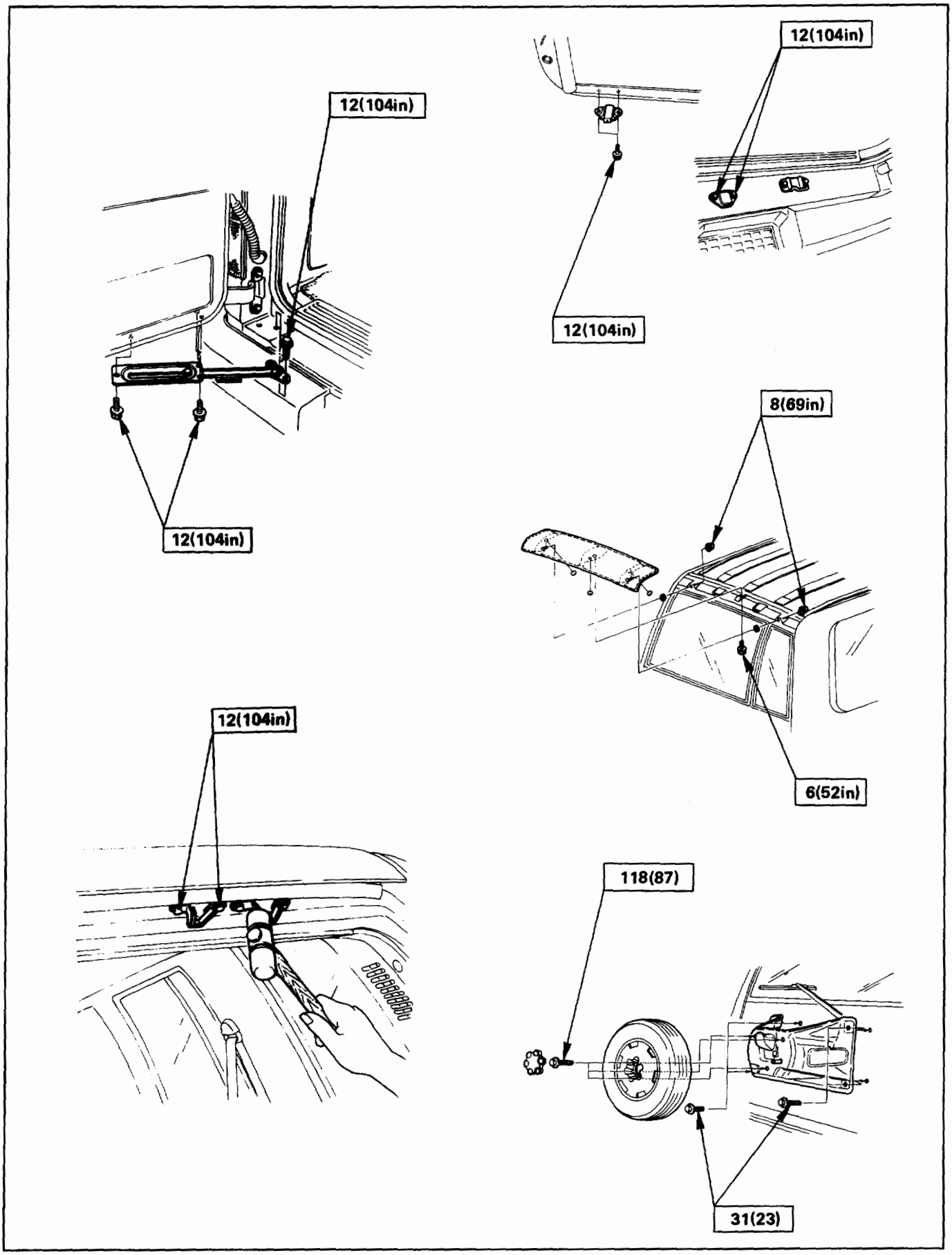

Fig. 10-285

N·m (lb·ft)

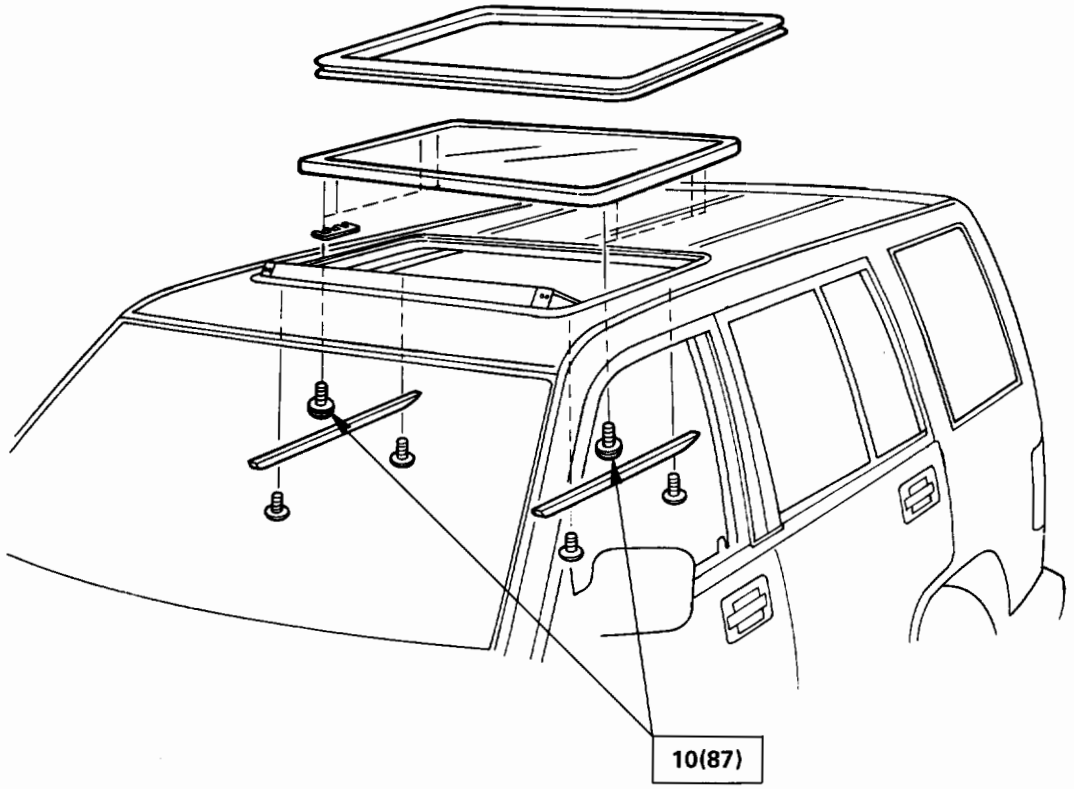

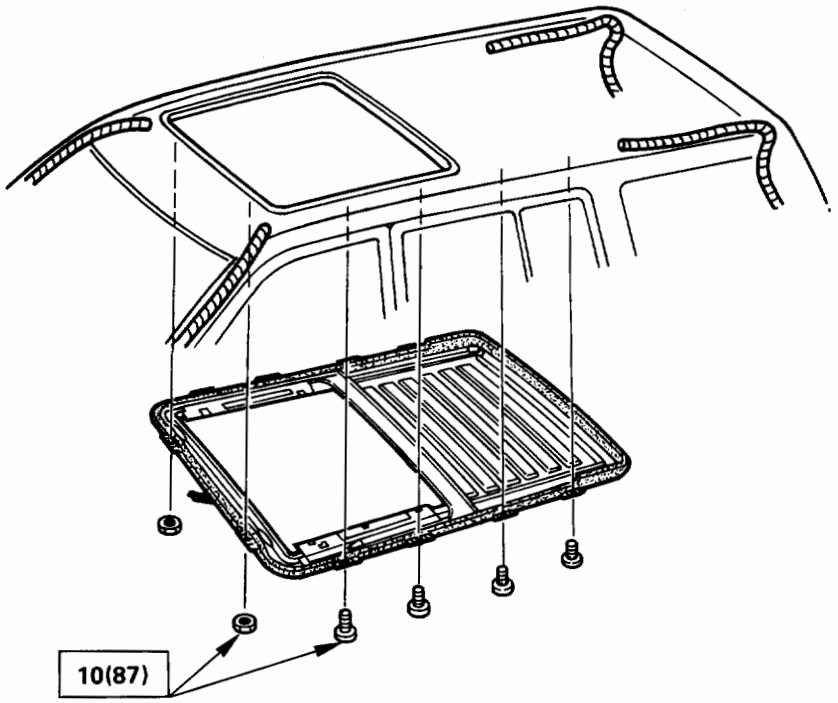

Fig. 10-286

SPECIAL TOOLS

ILLUSTRATION	**TOOL NO.** TOOL NAME
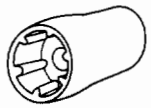	**J-34355** Spare tire carrier nut wrench

ILLUSTRATION	**TOOL NO.** TOOL NAME
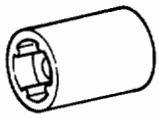	**J-39377** Rear seat bolt socket

APPENDIX A

CONVERSION TABLES

CONTENTS

Length **A–1**
Area **A–2**
Volume **A–3**
Mass **A–5**
Pressure **A–6**
Torque **A–7**
Temperature **A–8**

LENGTH

MILLIMETERS TO INCHES

mm	in.	mm	in.	mm	in.	mm	in.
1	0.0394	26	1.0236	51	2.0079	76	2.9921
2	0.0787	27	1.0630	52	2.0472	77	3.0315
3	0.1181	28	1.1024	53	2.0866	78	3.0709
4	0.1575	29	1.1417	54	2.1260	79	3.1102
5	0.1969	30	1.1811	55	2.1654	80	3.1496
6	0.2362	31	1.2205	56	2.2047	81	3.1890
7	0.2756	32	1.2598	57	2.2441	82	3.2283
8	0.3150	33	1.2992	58	2.2835	83	3.2677
9	0.3543	34	1.3386	59	2.3228	84	3.3071
10	0.3937	35	1.3780	60	2.3622	85	3.3465
11	0.4331	36	1.4173	61	2.4016	86	3.3858
12	0.4724	37	1.4567	62	2.4409	87	3.4252
13	0.5118	38	1.4961	63	2.4803	88	3.4646
14	0.5512	39	1.5354	64	2.5197	89	3.5039
15	0.5906	40	1.5748	65	2.5591	90	3.5433
16	0.6299	41	1.6142	66	2.5984	91	3.5827
17	0.6693	42	1.6535	67	2.6378	92	3.6220
18	0.7087	43	1.6929	68	2.6772	93	3.6614
19	0.7480	44	1.7323	69	2.7165	94	3.7008
20	0.7874	45	1.7717	70	2.7559	95	3.7402
21	0.8268	46	1.8110	71	2.7953	96	3.7795
22	0.8661	47	1.8504	72	2.8346	97	3.8189
23	0.9055	48	1.8898	73	2.8740	98	3.8583
24	0.9449	49	1.9291	74	2.9134	99	3.8976
25	0.9843	50	1.9685	75	2.9528	100	3.9370
101	3.9764	111	4.3701	121	4.7638	131	5.1575
102	4.0157	112	4.4094	122	4.8031	132	5.1969
103	4.0551	113	4.4488	123	4.8425	133	5.2362
104	4.0945	114	4.4882	124	4.8819	134	5.2756
105	4.1339	115	4.5276	125	4.9213	135	5.3150
106	4.1732	116	4.5669	126	4.9606	136	5.3543
107	4.2126	117	4.6063	127	5.0000	137	5.3937
108	4.2520	118	4.6457	128	5.0394	138	5.4331
109	4.2913	119	4.6850	129	5.0787	139	5.4724
110	4.3307	120	4.7244	130	5.1181	140	5.5118

INCHES TO MILLIMETERS

in.	mm	in.	mm
1/64	0.3969	33/64	13.0969
1/32	0.7938	17/32	13.4938
3/64	1.1906	35/64	13.8906
1/16	1.5875	9/16	14.2875
5/64	1.9844	37/64	14.6844
3/32	2.3813	19/32	15.0813
7/64	2.7781	39/64	15.4781
1/8	3.1750	5/8	15.8750
9/64	3.5719	41/64	16.2719
5/32	3.9688	21/32	16.6688
11/64	4.3656	43/64	17.0656
3/16	4.7625	11/16	17.4625
13/64	5.1594	45/64	17.8594
7/32	5.5563	23/32	18.2563
15/64	5.9531	47/64	18.6531
1/4	6.3500	3/4	19.0500
17/64	6.7469	49/64	19.4469
9/32	7.1438	25/32	19.8438
19/64	7.5406	51/64	20.2406
5/16	7.9375	13/16	20.6375
21/64	8.3344	53/64	21.0344
11/32	8.7313	27/32	21.4313
23/64	9.1281	55/64	21.8281
3/8	9.5250	7/8	22.2250
25/64	9.9219	57/64	22.6219
13/32	10.3188	29/32	23.0188
27/64	10.7156	59/64	23.4156
7/16	11.1125	15/16	23.8125
29/64	11.5094	61/64	24.2094
15/32	11.9063	31/32	24.6063
31/64	12.3031	63/64	25.0031
1/2	12.7000	1	25.4000

A–2 CONVERSION TABLE

LENGTH

FEET TO METERS

ft.	0	1	2	3	4	5	6	7	8	9	ft.
	m	m	m	m	m	m	m	m	m	m	
—		0.305	0.610	0.914	1.219	1.524	1.829	2.134	2.438	2.743	—
10	3.048	3.353	3.658	3.962	4.267	4.572	4.877	5.182	5.486	5.791	10
20	6.096	6.401	6.706	7.010	7.315	7.620	7.925	8.230	8.534	8.839	20
30	9.144	9.449	9.754	10.058	10.363	10.668	10.973	11.278	11.582	11.887	30
40	12.192	12.497	12.802	13.106	13.411	13.716	14.021	14.326	14.630	14.935	40
50	15.240	15.545	15.850	16.154	16.459	16.764	17.069	17.374	17.678	17.983	50
60	18.288	18.593	18.898	19.202	19.507	19.812	20.117	20.422	20.726	21.031	60
70	21.336	21.641	21.946	22.250	22.555	22.860	23.165	23.470	23.774	24.079	70
80	24.384	24.689	24.994	25.298	25.603	25.908	26.213	26.518	26.822	27.127	80
90	27.432	27.737	28.042	28.346	28.651	28.956	29.261	29.566	29.870	30.175	90
100	30.480	30.785	31.090	31.394	31.699	32.004	32.309	32.614	32.918	33.223	100

METERS TO FEET

m	0	1	2	3	4	5	6	7	8	9	m
	ft.	ft.	ft.	ft.	ft.	ft.	ft.	ft.	ft.	ft.	
—		3.2808	6.5617	9.8425	13.1234	16.4042	19.6850	22.9659	26.2467	29.5276	—
10	32.8084	36.0892	39.3701	42.6509	45.9318	49.2126	52.4934	55.7743	59.0551	62.3360	10
20	65.6168	68.8976	72.1785	75.4593	78.7402	82.0210	85.3018	88.5827	91.8635	95.1444	20
30	98.4252	101.7060	104.9869	108.2677	111.5486	114.8294	118.1102	121.3911	124.6719	127.9528	30
40	131.2336	134.5144	137.7953	141.0761	144.3570	147.6378	150.9186	154.1995	175.4803	160.7612	40
50	164.0420	167.3228	170.6037	173.8845	177.1654	180.4462	183.7270	187.0079	190.2887	193.5696	50
60	196.8504	200.1312	203.4121	206.6929	209.9738	213.2546	216.5354	219.8163	223.0971	226.3780	60
70	229.6588	232.9396	236.2205	239.5013	242.7822	246.0630	249.3438	252.6247	255.9055	259.1864	70
80	262.4672	265.7480	269.0289	272.3097	275.5906	278.8714	282.1522	285.4331	288.7139	291.9948	80
90	295.2756	298.5564	301.8373	305.1181	308.3990	311.6798	314.9606	318.2415	321.5223	324.8032	90
100	328.0840	331.3648	334.6457	337.9265	341.2074	344.4882	347.7690	351.0499	354.3307	357.6116	100

MILES TO KILOMETERS

miles	0	1	2	3	4	5	6	7	8	9	miles
	km	km	km	km	km	km	km	km	km	km	
—		1.609	3.219	4.828	6.437	8.047	9.656	11.265	12.875	14.484	—
10	16.093	17.703	19.312	20.921	22.531	24.140	25.750	27.359	28.968	30.578	10
20	32.187	33.796	35.406	37.015	38.624	40.234	41.843	43.452	45.062	46.671	20
30	48.280	49.890	51.499	53.108	54.718	56.327	57.936	59.546	61.155	62.764	30
40	64.374	65.983	67.592	69.202	70.811	72.420	74.030	75.639	77.249	78.858	40
50	80.467	82.077	83.686	85.295	86.905	88.514	90.123	91.733	93.342	94.951	50
60	96.561	98.170	99.779	101.389	103.000	104.607	106.217	107.826	109.435	111.045	60
70	112.654	114.263	115.873	117.482	119.091	120.700	122.310	123.919	125.529	127.138	70
80	128.748	130.357	131.966	133.576	135.185	136.794	138.404	140.013	141.622	143.232	80
90	144.841	146.450	148.060	149.669	151.278	152.888	154.497	156.106	157.716	159.325	90
100	160.934	162.544	164.153	165.762	167.372	168.981	170.590	172.200	173.809	175.418	100

KILOMETERS TO MILES

km	0	1	2	3	4	5	6	7	8	9	km
	miles	miles	miles	miles	miles	miles	miles	miles	miles	miles	
—		0.621	1.243	1.864	2.485	3.107	3.728	4.350	4.971	5.592	—
10	6.214	6.835	7.456	8.078	8.699	9.321	9.942	10.563	11.185	11.806	10
20	12.427	13.049	13.670	14.292	14.913	15.534	16.156	16.777	17.398	18.020	20
30	18.641	19.262	19.884	20.505	21.127	21.748	22.370	22.990	23.612	24.233	30
40	24.855	25.476	26.098	26.719	27.340	27.962	28.583	29.204	29.826	30.447	40
50	31.065	31.690	32.311	32.933	33.554	34.175	34.797	35.418	36.039	36.661	50
60	37.282	37.904	38.525	39.146	39.768	40.389	41.010	41.632	42.253	42.875	60
70	43.496	44.117	44.739	45.360	45.981	46.603	47.224	47.845	48.467	49.088	70
80	49.711	50.331	50.952	51.574	52.195	52.816	53.438	54.059	54.681	55.302	80
90	55.923	56.545	57.166	57.187	58.409	59.030	59.652	60.273	60.894	61.516	90
100	62.137	62.758	63.380	64.001	64.622	65.244	65.865	66.487	67.108	67.729	100

AREA

SQUARE INCHES TO SQUARE CENTIMETERS

in^2	0	1	2	3	4	5	6	7	8	9	in^2
	cm^2	cm^2	cm^2	cm^2	cm^2	cm^2	cm^2	cm^2	cm^2	cm^2	
—		6.452	12.903	19.355	25.806	32.258	38.710	45.161	51.613	58.064	—
10	64.516	70.968	77.419	83.871	90.322	96.774	103.226	109.677	116.129	122.580	10
20	129.032	135.484	141.935	148.387	154.838	161.290	167.742	174.193	180.645	187.096	20
30	193.548	200.000	206.451	212.903	219.354	225.806	232.258	238.709	245.161	251.612	30
40	258.064	264.516	270.967	277.419	283.870	290.322	296.774	303.225	309.677	316.128	40
50	322.580	329.032	335.483	341.935	348.386	354.838	361.290	367.741	374.193	380.644	50
60	387.096	393.548	399.999	406.451	412.902	419.354	425.806	432.257	438.709	445.160	60
70	451.612	458.064	464.515	470.967	477.418	483.870	490.322	496.773	503.225	509.676	70
80	516.128	522.580	529.031	535.483	541.934	548.386	554.838	561.289	567.741	574.192	80
90	580.644	587.096	593.547	599.999	606.450	612.902	619.354	625.805	632.257	638.708	90
100	645.160	651.612	658.063	664.515	670.966	677.418	683.870	690.312	696.773	703.224	100

SQUARE CENTIMETERS TO SQUARE INCHES

cm^2	0	1	2	3	4	5	6	7	8	9	cm^2
	in^2	in^2	in^2	in^2	in^2	in^2	in^2	in^2	in^2	in^2	
—		0.155	0.310	0.465	0.620	0.775	0.930	1.085	1.240	1.395	—
10	1.550	1.705	1.860	2.015	2.170	2.325	2.480	2.635	2.790	2.945	10
20	3.100	3.255	3.410	3.565	3.720	3.875	4.030	4.185	4.340	4.495	20
30	4.650	4.805	4.960	5.115	5.270	5.425	5.580	5.735	5.890	6.045	30
40	6.200	6.355	6.510	6.665	6.820	6.975	7.130	7.285	7.440	7.595	40
50	7.750	7.905	8.060	8.215	8.370	8.525	8.680	8.835	8.990	9.145	50
60	9.300	9.455	9.610	9.765	9.920	10.075	10.230	10.385	10.540	10.695	60
70	10.850	11.005	11.160	11.315	11.470	11.625	11.780	11.935	12.090	12.245	70
80	12.400	12.555	12.710	12.865	13.020	13.175	13.330	13.485	13.640	13.795	80
90	13.950	14.105	14.260	14.415	14.570	14.725	14.880	15.035	15.190	15.345	90
100	15.500	15.655	15.810	15.965	16.120	16.275	16.430	16.583	16.740	16.895	100

VOLUME

CUBIC INCHES TO CUBIC CENTIMETERS

in^3	0	1	2	3	4	5	6	7	8	9	in^3
	cm^3(cc)	cm^3(cc)	cm^3(cc)	cm^3(cc)	cm^3(cc)	cm^3(cc)	cm^3(cc)	cm^3(cc)	cm^3(cc)	cm^3(cc)	
		16.387	32.774	49.161	65.548	81.935	98.322	114.709	131.097	147.484	—
10	163.871	180.258	196.645	213.032	229.419	245.806	262.193	278.580	294.967	311.354	10
20	327.741	344.128	360.515	376.902	393.290	209.677	426.064	442.451	458.838	475.225	20
30	491.612	507.999	524.386	540.773	557.160	573.547	589.934	606.321	622.708	639.095	30
40	655.483	671.870	688.257	704.644	721.031	737.418	753.805	770.192	786.579	802.966	40
50	819.353	835.740	852.127	868.514	884.901	901.289	917.676	934.063	950.450	966.837	50
60	983.224	999.611	1015.998	1032.385	1048.772	1065.159	1081.546	1097.933	1114.320	1130.707	60
70	1147.094	1163.482	1179.869	1196.256	1212.643	1229.030	1245.417	1261.804	1278.191	1294.578	70
80	1310.965	1327.352	1343.739	1360.126	1376.513	1392.900	1409.288	1425.675	1442.062	1458.449	80
90	1474.836	1491.223	1507.610	1523.997	1540.384	1556.771	1573.158	1589.545	1605.932	1622.319	90
100	1638.706	1655.093	1671.481	1687.868	1704.255	1720.642	1737.029	1753.416	1769.803	1786.190	100

CUBIC CENTIMETERS TO CUBIC INCHES

cm^3(cc)	0	1	2	3	4	5	6	7	8	9	cm^3(cc)
	in^3	in^3	in^3	in^3	in^3	in^3	in^3	in^3	in^3	in^3	
—		0.0610	0.1220	0.1831	0.2441	0.3051	0.3661	0.4272	0.4882	0.5492	—
10	0.6102	0.6713	0.7323	0.7933	0.8543	0.9153	0.9764	1.0374	1.0984	1.1594	10
20	1.2205	1.2815	1.3425	1.4035	1.4646	1.5256	1.5866	1.6476	1.7086	1.7697	20
30	1.8307	1.8917	1.9527	2.0138	2.0748	2.1358	2.1968	2.2579	2.1389	2.3799	30
40	2.4409	2.5020	2.5630	2.6240	2.6850	2.7460	2.8071	2.8681	2.9291	2.9901	40
50	3.0512	3.1122	3.1732	3.2342	3.2952	3.3563	3.4173	3.4783	3.5393	3.6004	50
60	3.6614	3.7224	3.7834	3.8444	3.9055	3.9665	4.0275	4.0885	4.1496	4.2106	60
70	4.2716	4.3326	4.3937	4.4547	4.5157	4.5767	4.6377	4.6988	4.7598	4.8208	70
80	4.8818	4.9429	5.0039	5.0649	5.1259	5.1870	5.2480	5.3090	5.3700	5.4310	80
90	5.4921	5.5531	5.6141	5.6751	5.7362	5.7972	5.8582	5.9192	5.9803	6.0413	90
100	6.1023	6.1633	6.2243	6.2854	6.3464	6.4074	6.4684	6.5295	6.5905	6.6515	100

A–4 CONVERSION TABLE

VOLUME

GALLONS (U. S.) TO LITERS

U.S. gal.	0	1	2	3	4	5	6	7	8	9	U.S. gal.
	liters	liters	liters	liters	liters	liters	liters	liters	liters	liters	
—		3.7854	7.5709	11.3563	15.1417	18.9271	22.7126	26.4980	30.2834	34.0633	—
10	37.8543	41.6397	45.4251	49.2105	52.9960	56.7814	60.5668	64.3523	68.1377	71.9231	10
20	75.7085	79.4940	83.2794	87.0648	90.8502	94.6357	98.4211	102.2065	105.9920	109.7774	20
30	113.5629	117.3482	121.1337	124.9191	128.7045	132.4901	136.2754	140.0608	143.8462	147.6316	30
40	151.4171	155.2025	158.9879	162.7734	166.5588	170.3442	174.1296	177.9151	181.7005	185.4859	40
50	189.2713	193.0568	196.8422	200.6276	204.4131	208.1985	211.9839	215.7693	219.5548	223.3402	50
60	227.1256	230.9110	234.6965	238.4819	242.2673	246.0527	249.8382	253.6236	257.4090	261.1945	60
70	264.9799	268.7653	272.5507	276.3362	280.1216	283.9070	287.6924	291.4779	295.2633	299.0487	70
80	302.8342	306.6196	310.4050	314.1904	317.9759	321.7613	325.5467	329.3321	333.1176	336.9030	80
90	340.6884	344.4738	348.2593	352.0447	355.8301	359.6156	363.4010	367.1864	370.9718	374.7573	90
100	378.5427	382.3281	386.1135	389.8990	393.6844	397.4698	401.2553	405.0407	408.8261	412.6115	100

LITERS TO GALLONS (U.S.)

liters	0	1	2	3	4	5	6	7	8	9	liters
	gal.	gal.	gal.	gal.	gal.	gal.	gal.	gal.	gal.	gal.	
—		0.2642	0.5283	0.7925	1.0567	1.3209	1.5850	1.8492	2.1134	2.3775	—
10	2.6417	2.9059	3.1701	3.4342	3.6984	3.9626	4.2268	4.4909	4.7551	5.0193	10
20	5.2834	5.5476	5.8118	6.0760	6.3401	6.6043	6.8685	7.1326	7.3968	7.6610	20
30	7.9252	8.1893	8.4535	8.7177	8.9818	9.2460	9.5102	9.7743	10.0385	10.3027	30
40	10.5669	10.8311	11.0952	11.3594	11.6236	11.8877	12.1519	12.4161	12.6803	12.9444	40
50	13.2086	13.4728	13.7369	14.0011	14.2653	14.5295	14.7936	15.0578	15.3220	15.5861	50
60	15.8503	16.1145	16.3787	16.6428	16.9070	17.1711	17.4354	17.6995	17.9637	18.2279	60
70	18.4920	18.7562	19.0204	19.2846	19.5487	19.8129	20.0771	20.3412	20.6054	20.8696	70
80	21.1338	21.3979	21.6621	21.9263	22.1904	22.4546	22.7188	22.9830	23.2471	23.5113	80
90	23.7755	24.0397	24.3038	24.5680	24.8322	25.0963	25.3605	25.6247	25.8889	26.1530	90
100	26.4172	26.6814	26.9455	27.2097	27.4739	27.7381	28.0022	28.2664	28.5306	28.7947	100

GALLONS (IMP.) TO LITERS

Imp gal.	0	1	2	3	4	5	6	7	8	9	Imp gal.
	liters	liters	liters	liters	liters	liters	liters	liters	liters	liters	
—		4.5459	9.0918	13.6377	18.1836	22.7295	27.2754	31.8213	36.3672	40.9131	—
10	45.4590	50.0049	54.5508	59.0967	63.6426	68.1885	72.7344	77.2803	81.8262	86.3721	10
20	90.9180	95.4639	100.0098	104.5557	109.1016	113.6475	118.1934	122.7393	127.2852	131.8311	20
30	136.3770	140.9229	145.4688	150.0147	154.5606	159.1065	163.6524	168.1983	172.7442	177.2901	30
40	181.8360	186.3819	190.9278	195.4737	200.0196	204.5655	209.1114	213.6573	218.2032	222.7491	40
50	227.2950	231.8409	236.3868	240.9327	245.4786	250.0245	254.5704	259.1163	263.6622	268.2081	50
60	272.7540	277.2999	281.8458	286.3917	290.9376	295.4835	300.0294	304.5753	309.1212	313.6671	60
70	318.2130	322.7589	327.3048	331.8507	336.8966	340.9425	345.4884	350.0343	354.5802	359.1261	70
80	363.6720	368.2179	372.7638	377.3097	381.8556	386.4015	390.9474	395.4933	400.0392	404.5851	80
90	409.1310	413.6769	418.2228	422.7687	427.3146	431.8605	436.4064	440.9523	445.4982	450.0441	90
100	454.5900	459.1359	463.6818	468.2277	472.7736	477.3195	481.8654	486.4113	490.9572	495.5031	100

LITERS TO GALLONS (IMP.)

liters	0	1	2	3	4	5	6	7	8	9	liter
	gal.	gal.	gal.	gal.	gal.	gal.	gal.	gal.	gal.	gal.	
—		0.2200	0.4400	0.6599	0.8799	1.0999	1.3199	1.5399	1.7598	1.9798	—
10	2.1998	2.4198	2.6398	2.8597	3.0797	3.2997	3.5197	3.7397	3.9596	4.1796	10
20	4.3996	4.6196	4.8396	5.0595	5.2795	5.4995	5.7195	5.9395	6.1594	6.3794	20
30	6.5994	6.8194	7.0394	7.2593	7.4793	7.6993	7.9193	8.1393	8.3592	8.5792	30
40	8.7992	9.0192	9.2392	9.4591	9.6791	9.8991	10.1191	10.3391	10.5590	10.7790	40
50	10.9990	11.2190	11.4390	11.6590	11.8789	12.0989	12.3189	12.5389	12.7588	12.9788	50
60	13.1988	13.4188	13.6388	13.8587	14.0787	14.2987	14.5187	14.7387	14.9586	15.1786	60
70	15.3986	15.6186	15.8386	16.0585	16.2785	16.4985	16.7185	16.9385	17.1584	17.3784	70
80	17.5984	17.8184	18.0384	18.2583	18.4783	18.6983	18.9183	19.1383	19.3582	19.5782	80
90	19.7982	20.0182	20.2382	20.4581	20.6781	20.8981	21.1181	21.3381	21.5580	21.7780	90
100	21.9980	22.2180	22.4380	22.6579	22.8779	23.0979	23.3179	23.5379	23.7578	23.9778	100

MASS

POUNDS TO KILOGRAMS

lbs.	0	1	2	3	4	5	6	7	8	9	lbs.
	kg	kg	kg	kg	kg	kg	kg	kg	kg	kg	
—		0.454	0.907	1.361	1.814	2.268	2.722	3.175	3.629	4.082	—
10	4.536	4.990	5.443	5.897	6.350	6.804	7.257	7.711	8.165	8.618	10
20	9.072	9.525	9.979	10.433	10.886	11.340	11.793	12.247	12.701	13.154	20
30	13.608	14.061	14.515	14.969	15.422	15.876	16.329	16.783	17.237	17.690	30
40	18.144	18.597	19.051	19.504	19.958	20.412	20.865	21.319	21.772	22.226	40
50	22.680	23.133	23.587	24.040	24.494	24.948	25.401	25.855	26.308	26.762	50
60	27.216	27.669	28.123	28.576	29.030	29.484	29.937	30.391	30.844	31.298	60
70	31.751	32.205	32.659	33.112	33.566	34.019	34.473	34.927	35.380	35.834	70
80	36.287	36.741	37.195	37.648	38.102	38.555	39.009	39.463	39.916	40.370	80
90	40.823	41.277	41.731	42.184	42.638	43.091	43.545	43.998	44.452	44.906	90
100	45.359	45.813	46.266	46.720	47.174	47.627	47.081	48.534	48.988	49.442	100

KILOGRAMS TO POUNDS

kg	0	1	2	3	4	5	6	7	8	9	kg
	lbs.	lbs.	lbs.	lbs.	lbs.	lbs.	lbs.	lbs.	lbs.	lbs.	
—		2.205	4.409	6.614	8.818	11.023	13.228	15.432	17.637	19.842	—
10	22.046	24.251	26.455	28.660	30.865	33.069	35.274	37.479	39.683	41.888	10
20	44.092	46.297	48.502	50.706	52.911	55.116	57.320	59.525	61.729	63.934	20
30	66.139	68.343	70.548	72.753	74.957	77.162	79.366	81.571	83.776	85.980	30
40	88.185	90.390	92.594	94.799	97.003	99.208	101.413	103.617	105.822	108.026	40
50	110.231	112.436	114.640	116.845	119.050	121.254	123.459	125.633	127.868	130.073	50
60	132.277	134.482	136.687	138.891	141.096	143.300	145.505	147.710	149.914	152.119	60
70	154.324	156.528	158.732	160.937	163.142	165.347	167.551	169.756	171.961	174.165	70
80	176.370	178.574	180.780	182.984	185.188	187.393	189.597	191.802	194.007	196.211	80
90	198.416	200.621	202.825	205.030	207.234	209.439	211.644	213.848	216.053	218.258	90
100	220.462	222.667	224.871	227.076	229.281	231.485	233.690	235.895	238.099	240.304	100

KILOGRAMS TO NEWTON

kg	0	1	2	3	4	5	6	7	8	9	kg
	N	N	N	N	N	N	N	N	N	N	
—	—	9.81	19.61	29.42	39.23	49.03	58.84	68.65	78.45	88.26	—
10	98.07	107.87	117.68	127.49	137.29	147.10	156.91	166.71	176.52	186.33	10
20	196.13	205.94	215.75	225.55	235.36	245.17	254.97	264.78	274.59	284.39	20
30	294.20	304.01	313.81	323.62	333.43	343.23	353.04	362.85	372.65	382.46	30
40	392.27	402.07	411.88	421.69	431.49	441.30	451.11	460.91	470.72	480.53	40
50	490.33	500.14	509.95	519.75	529.56	539.37	549.17	558.98	568.79	578.59	50
60	558.40	598.21	608.01	617.82	627.63	637.43	647.24	657.05	666.85	676.66	60
70	686.47	696.27	706.08	715.89	725.69	735.50	745.31	755.11	764.92	774.73	70
80	784.53	794.34	804.15	813.95	823.76	833.57	843.37	853.18	862.99	872.79	80
90	882.60	892.41	902.21	912.02	921.83	931.63	941.44	951.25	961.05	970.86	90
100	980.67	990.47	1000.28	1010.08	1019.89	1029.70	1039.50	1049.31	1059.12	1068.92	100

NEWTON TO KILOGRAMS

N	0	10	20	30	40	50	60	70	80	90	N
	kg	kg	kg	kg	kg	kg	kg	kg	kg	kg	
—	—	1.020	2.039	3.059	4.079	5.099	6.118	7.138	8.158	9.177	—
100	10.197	11.217	12.237	13.256	14.276	15.296	16.316	17.335	18.355	19.375	100
200	20.394	21.414	22.434	23.453	24.473	25.493	26.513	27.532	28.552	29.572	200
300	30.592	31.611	32.631	33.651	34.670	35.690	36.710	37.730	38.749	39.769	300
400	40.789	41.809	42.828	43.848	44.868	45.887	46.907	47.927	48.947	49.966	400
500	50.986	52.006	53.025	54.045	55.065	56.085	57.104	58.124	59.144	60.163	500
600	61.183	62.203	63.223	64.242	65.262	66.282	67.302	68.321	69.341	70.361	600
700	71.380	72.400	73.420	74.440	75.459	76.479	77.499	78.518	79.538	80.558	700
800	81.578	82.597	83.617	84.637	85.656	86.676	87.696	88.716	89.735	90.755	800
900	91.775	92.795	93.814	94.834	95.854	96.873	97.893	98.913	99.933	100.952	900
1000	101.972	102.992	104.011	105.031	106.051	107.071	108.090	109.110	110.130	111.149	1000

A–6 CONVERSION TABLE

PRESSURE

POUNDS PER SQUARE INCHES TO KILOGRAMS PER SQUARE CENTIMETERS

lb/in²	0	1	2	3	4	5	6	7	8	9	lb/in²
(psi)	kg/cm²	kg/cm²	kg/cm²	kg/cm²	kg/cm²	kg/cm²	kg/cm²	kg/cm²	kg/cm²	kg/cm²	(psi)
—		0.0703	0.1406	0.2109	0.2812	0.3515	0.4218	0.4921	0.5625	0.6328	—
10	0.7031	0.7734	0.8437	0.9140	0.9843	1.0546	1.1249	1.1952	1.2655	1.3358	10
20	1.4061	1.4764	1.5468	1.6171	1.6874	1.7577	1.8280	1.8983	1.9686	2.0389	20
30	2.1092	2.1795	2.2498	2.3201	2.3904	2.4607	2.5311	2.6014	2.6717	2.7420	30
40	2.8123	2.8826	2.9529	3.0232	3.0935	3.1638	3.2341	3.3044	3.3747	3.4450	40
50	3.5154	3.5857	3.6560	3.7263	3.7966	3.8669	3.9372	4.0075	4.0778	4.1481	50
60	4.2184	4.2887	4.3590	4.4293	4.4996	4.5700	4.6403	4.7106	4.7809	4.8512	60
70	4.9215	4.9918	5.0621	5.1324	5.2027	5.2730	5.3433	5.4136	5.4839	5.5543	70
80	5.6246	5.6947	5.7652	5.8355	5.9058	5.9761	6.0464	6.1167	6.1870	6.2573	80
90	6.3276	6.3979	6.4682	6.5386	6.6089	6.6792	6.7495	6.8198	6.8901	6.9604	90
100	7.0307	7.1010	7.1713	7.2416	7.3119	7.3822	7.4525	7.5228	7.5932	7.6635	100

KILOGRAMS PER SQUARE CENTIMETERS TO POUNDS PER SQUARE INCHES

kg/cm²	0	1	2	3	4	5	6	7	8	9	kg/cm²
	lb/in²(psi)	lb/in²(psi)	lb/in²(psi)	lb/in²(psi)	lb/in²(psi)	lb/in²(psi)	lb/in²(psi)	lb/in²(psi)	lb/in²(psi)	lb/in²(psi)	
—		14.22	28.45	42.67	56.89	71.12	85.34	99.56	113.78	128.01	—
10	142.23	156.45	170.68	184.90	199.12	213.35	227.57	241.79	256.01	270.24	10
20	284.46	298.68	312.91	327.13	341.35	355.58	369.80	384.02	398.24	412.47	20
30	426.69	440.91	455.14	469.36	483.58	497.81	512.03	526.25	540.47	554.70	30
40	568.92	583.14	597.37	611.59	625.81	640.04	654.26	668.48	682.70	696.93	40
50	711.16	725.37	739.60	753.82	768.04	782.27	795.49	810.71	824.93	839.16	50
60	853.38	867.60	881.83	896.05	910.27	924.50	938.72	952.94	967.16	981.39	60
70	995.61	1009.83	1024.06	1038.28	1052.50	1066.73	1080.95	1095.17	1109.39	1123.62	70
80	1137.84	1152.06	1166.27	1180.51	1194.73	1208.96	1223.18	1237.40	1251.62	1265.85	80
90	1280.07	1294.20	1308.52	1322.74	1336.96	1351.19	1365.41	1379.63	1393.85	1408.08	90
100	1422.30	1436.52	1450.75	1464.97	1479.19	1493.42	1507.64	1521.86	1536.08	1550.31	100

KILOGRAMS PER SQUARE CENTIMETERS TO KILO PASCAL

kg/cm²	0	1	2	3	4	5	6	7	8	9	kg/cm²
	KPa	KPa	KPa	KPa	KPa	KPa	KPa	KPa	KPa	KPa	
—	—	98.1	196.1	294.2	392.3	490.3	588.4	686.5	784.5	882.6	—
10	980.7	1078.7	1176.8	1274.9	1372.9	1471.0	1569.1	1667.1	1765.2	1863.3	10
20	1961.3	2059.4	2157.5	2255.5	2353.6	2451.7	2549.7	2647.8	2745.9	2843.9	20
30	2942.0	3040.1	3138.1	3236.2	3334.3	3432.3	3530.4	3628.5	3726.5	3824.6	30
40	3922.7	4020.7	4118.8	4216.9	4314.9	4413.0	4511.1	4609.1	4707.2	4805.3	40
50	4903.3	5001.4	5099.5	5197.5	5295.6	5393.7	5491.7	5589.8	5687.9	5785.9	50
60	5584.0	5982.1	6080.1	6178.2	6276.3	6374.3	6472.4	6570.5	6668.5	6766.6	60
70	6864.7	6962.7	7060.8	7158.9	7256.9	7355.0	7453.1	7551.1	7649.2	7747.3	70
80	7845.3	7943.4	8041.5	8139.5	8237.6	8335.7	8433.7	8531.8	8629.9	8727.9	80
90	8826.0	8924.1	9022.1	9120.2	9218.3	9316.3	9414.4	9512.5	9610.5	9708.6	90
100	9806.7	9904.7	10002.8	10100.8	10198.9	10297.0	10395.0	10493.1	10591.2	10689.2	100

KILO PASCAL TO KILOGRAMS PER SQUARE CENTIMETERS

KPa	0	100	200	300	400	500	600	700	800	900	KPa
	kg/cm²	kg/cm²	kg/cm²	kg/cm²	kg/cm²	kg/cm²	kg/cm²	kg/cm²	kg/cm²	kg/cm²	
—	—	1.020	2.039	3.059	4.079	5.099	6.118	7.138	8.158	9.177	—
1000	10.197	11.217	12.237	13.256	14.276	15.296	16.316	17.335	18.355	19.375	1000
2000	20.394	21.414	22.434	23.453	24.473	25.493	26.513	27.532	28.552	29.572	2000
3000	30.592	31.611	32.631	33.651	34.670	35.690	36.710	37.730	38.749	39.769	3000
4000	40.789	41.809	42.828	43.848	44.868	45.887	46.907	47.927	48.947	49.966	4000
5000	50.986	52.006	53.025	54.045	55.065	56.085	57.104	58.124	59.144	60.163	5000
6000	61.183	62.203	63.223	64.242	65.262	66.282	67.302	68.321	69.341	70.361	6000
7000	71.380	72.400	73.420	74.440	75.459	76.479	77.499	78.518	79.538	80.558	7000
8000	81.578	82.597	83.617	84.637	85.656	86.676	87.696	88.716	89.735	90.755	8000
9000	91.775	92.794	93.814	94.834	95.854	96.873	97.893	98.913	99.933	100.952	9000
10000	101.972	102.992	104.011	105.031	106.051	107.071	108.090	109.110	110.130	111.149	10000

TORQUE

FOOT POUNDS TO KILOGRAMMETERS

ft. lbs.	0	1	2	3	4	5	6	7	8	9	ft. lbs.
	kg-m	kg-m	kg-m	kg-m	kg-m	kg-m	kg-m	kg-m	kg-m	kg-m	
—		0.138	0.277	0.415	0.553	0.691	0.830	0.968	1.106	1.244	—
10	1.383	1.521	1.659	1.797	1.936	2.074	2.212	2.350	2.489	2.627	10
20	2.765	2.903	3.042	3.180	3.318	3.456	3.595	3.733	3.871	4.009	20
30	4.148	4.286	4.424	4.562	4.700	4.839	4.977	5.115	5.253	5.392	30
40	5.530	5.668	5.807	5.945	6.083	6.221	6.360	6.498	6.636	6.774	40
50	6.913	7.051	7.189	7.328	7.466	7.604	7.742	7.881	8.019	8.157	50
60	8.295	8.434	8.572	8.710	8.848	8.987	9.125	9.263	9.401	9.540	60
70	9.678	9.816	9.954	10.093	10.231	10.369	10.507	10.646	10.784	10.922	70
80	11.060	11.199	11.337	11.475	11.613	11.752	11.890	12.028	12.166	12.305	80
90	12.442	12.581	12.719	12.858	12.996	13.134	13.272	13.410	13.549	13.687	90
100	13.826	13.964	14.102	14.240	14.379	14.517	14.655	14.793	14.932	15.070	100

KILOGRAMMETERS TO FOOT POUNDS

kg-m	0	1	2	3	4	5	6	7	8	9	kg-m
	ft. lbs.	ft. lbs.	ft. lbs.	ft. lbs.	ft. lbs.	ft. lbs.	ft. lbs.	ft. lbs.	ft. lbs.	ft. lbs.	
—		7.23	14.47	21.70	28.93	36.17	43.40	50.63	57.86	65.10	—
10	72.33	79.56	86.80	94.03	101.26	108.50	115.73	122.96	130.19	137.43	10
20	144.66	151.89	159.13	166.36	173.59	180.83	188.06	195.29	202.52	209.76	20
30	217.00	224.22	231.46	238.69	245.92	253.16	260.39	267.62	274.85	282.09	30
40	289.32	296.55	303.79	311.02	318.25	325.49	332.72	339.95	347.18	354.42	40
50	361.65	368.88	376.12	383.35	390.58	397.82	405.05	412.28	419.51	426.75	50
60	433.98	441.21	448.45	455.68	462.91	470.15	477.38	484.61	491.84	499.08	60
70	506.31	513.54	520.78	528.01	535.24	542.48	549.71	556.94	564.17	571.41	70
80	578.64	585.87	593.11	600.34	607.57	614.81	622.04	629.27	636.50	643.74	80
90	650.97	658.20	665.44	672.67	679.90	687.14	694.37	701.60	708.83	716.07	90
100	723.30	730.53	737.77	745.00	752.23	759.47	766.70	773.93	781.16	788.40	100

KILOGRAMMETERS TO NEWTONMETERS

kg-m	0	1	2	3	4	5	6	7	8	9	kg-m
	N-m	N-m	N-m	N-m	N-m	N-m	N-m	N-m	N-m	N-m	
—	—	9.81	19.61	29.42	39.23	49.03	58.84	68.65	78.45	88.26	—
10	98.07	107.87	117.68	127.49	137.29	147.10	156.91	166.71	176.52	186.33	10
20	196.13	205.94	215.75	225.55	235.36	245.17	254.97	264.78	274.59	284.39	20
30	294.20	304.01	313.81	323.62	333.43	343.23	353.04	362.85	372.65	382.46	30
40	392.27	402.07	411.88	421.69	431.49	441.30	451.11	460.91	470.72	480.53	40
50	490.33	500.14	509.95	519.75	529.56	539.37	549.17	558.98	568.79	578.59	50
60	588.40	598.21	608.01	617.82	627.63	637.43	647.24	657.05	666.85	676.66	60
70	686.47	696.27	706.08	715.89	725.69	735.50	745.31	755.11	764.92	774.73	70
80	784.53	794.34	804.15	813.95	823.76	833.57	843.37	853.18	862.99	872.79	80
90	882.60	892.41	902.21	912.02	921.83	931.63	941.44	951.25	961.05	970.86	90
100	980.67	990.47	1000.28	1010.08	1019.89	1029.70	1039.50	1049.31	1059.12	1068.92	100

NEWTONMETERS TO KILOGRAMMETERS

N-m	0	10	20	30	40	50	60	70	80	90	N-m
	kg-m	kg-m	kg-m	kg-m	kg-m	kg-m	kg-m	kg-m	kg-m	kg-m	
—	—	1.020	2.039	3.059	4.079	5.099	6.118	7.138	8.158	9.177	—
100	10.197	11.217	12.236	13.256	14.276	15.296	16.315	17.335	18.355	19.374	100
200	20.394	21.414	22.433	23.453	24.473	25.493	26.512	27.532	28.552	29.571	200
300	30.591	31.611	32.630	33.650	34.670	35.690	36.710	37.729	38.749	39.768	300
400	40.789	41.808	42.827	43.847	44.867	45.887	46.906	47.926	48.946	49.965	400
500	50.986	52.005	53.024	54.044	55.064	56.084	57.103	58.123	59.143	60.162	500
600	61.183	62.202	63.221	64.241	65.261	66.281	67.300	68.320	69.340	70.359	600
700	71.380	72.399	73.418	74.438	75.458	76.478	77.497	78.517	79.537	80.556	700
800	81.577	82.596	83.615	84.635	85.655	86.675	87.694	88.714	89.734	90.753	800
900	91.774	92.793	93.812	94.832	95.852	96.872	97.891	98.911	99.931	100.950	900
1000	101.972	102.990	104.009	105.029	106.049	107.069	108.088	109.108	110.128	111.147	1000

TEMPERATURE

FAHRENHEIT TO CENTIGRADE

°F	°C	°F	°C	°F	°C	°F	°C	°F	°C	°F	°C	°F	°C	°F	°C
-60	-51.1	-2	-18.9	56	13.3	114	45.6	172	77.8	230	110.0	288	142.2	346	174.4
-58	-50	0	-17.8	58	14.4	116	46.7	174	78.9	232	111.1	290	143.3	348	175.6
-56	-48.9	2	-16.7	60	15.6	118	47.8	176	80.0	234	112.2	292	144.4	350	176.7
-54	-47.8	4	-15.6	62	16.7	120	48.9	178	81.1	236	113.3	294	145.6	352	177.8
-52	-46.7	6	-14.4	64	17.8	122	50.0	180	82.2	238	114.4	296	146.7	354	178.9
-50	-45.6	8	-13.3	66	18.9	124	51.1	182	83.3	240	115.6	298	147.8	356	180.0
-48	-44.4	10	-12.2	68	20.0	126	52.2	184	84.4	242	116.7	300	148.9	358	181.1
-46	-43.3	12	-11.1	70	21.1	128	53.3	186	85.6	244	117.8	302	150.0	360	182.2
-44	-42.2	14	-10.0	72	22.2	130	54.4	188	86.7	246	118.9	304	151.1	362	183.3
-42	-41.1	16	-8.9	74	23.3	132	55.6	190	87.8	248	120.0	306	152.2	364	184.4
-40	-40.0	18	-7.8	76	24.9	134	56.7	192	88.9	250	121.1	308	153.3	366	185.6
-38	-38.9	20	-6.7	78	25.6	136	57.8	194	90.0	252	122.2	310	154.4	368	186.7
-36	-37.8	22	-5.6	80	26.7	138	58.9	196	91.1	254	123.3	312	155.6	370	187.8
-34	-36.7	24	-4.4	82	27.8	140	60.0	198	92.2	256	124.4	314	156.7	372	188.9
-32	-35.6	26	-3.3	84	28.9	142	61.1	200	93.3	258	125.6	316	157.8	374	190.0
-30	-34.4	28	-2.2	86	30.0	144	62.2	202	94.4	260	126.7	318	158.9	376	191.1
-28	-33.3	30	-1.1	88	31.1	146	63.3	204	95.6	262	127.8	320	160.0	378	192.2
-26	-32.2	32	-0	90	32.2	148	64.4	206	96.7	264	128.9	322	161.1	380	193.3
-24	-31.1	34	1.1	92	33.3	150	65.6	208	97.8	266	130.0	324	162.2	382	194.4
-22	-30.0	36	2.2	94	34.4	152	66.7	210	98.9	268	131.1	326	163.3	384	195.6
-20	-28.9	38	3.3	96	35.6	154	67.8	212	100.0	270	132.2	328	164.4	386	196.7
-18	-27.8	40	4.4	98	36.7	156	68.9	214	101.1	272	133.3	330	165.6	388	197.8
-16	-26.7	42	5.6	100	37.8	158	70.0	216	102.2	274	134.4	332	166.7	390	198.9
-14	-25.6	44	6.7	102	38.9	160	71.1	218	103.3	276	135.6	334	167.8	392	200.0
-12	-24.4	46	7.8	104	40.0	162	72.2	220	104.4	278	136.7	336	168.9	400	204.4
-10	-23.3	48	8.9	106	41.1	164	73.3	222	105.6	280	137.8	338	170.0	410	210.0
-8	-22.2	50	10.0	108	42.2	166	74.4	224	106.7	282	138.9	340	171.1	420	215.6
-6	-21.1	52	11.1	110	43.3	168	75.6	226	107.8	284	140.0	342	172.2	430	221.1
-4	-20.0	54	12.2	112	44.4	170	76.7	228	108.9	286	141.1	344	173.3	440	226.7

CENTIGRADE TO FAHRENHEIT

°C	°F	°C	°F	°C	°F	°C	°F	°C	°F	°C	°F	°C	°F	°C	°F
-50	-58.0	-18	- 0.4	14	57.2	46	114.8	78	172.4	110	230.0	142	287.6	174	345.2
-49	-56.2	-17	1.4	15	59.0	47	116.6	79	174.2	111	231.8	143	289.4	175	347.0
-48	-54.4	-16	3.2	16	60.8	48	118.4	80	176.0	112	233.6	144	291.2	176	348.8
-47	-52.6	-15	5.0	17	62.6	49	120.2	81	177.8	113	235.4	145	293.0	177	350.6
-46	-50.8	-14	6.8	18	64.4	50	122.0	82	179.6	114	237.2	146	294.8	178	352.4
-45	-49.0	-13	8.6	19	66.2	51	123.8	83	181.4	115	239.0	147	296.6	179	354.2
-44	-47.2	-12	10.4	20	68.0	52	125.6	84	183.2	116	240.8	148	298.4	180	356.0
-43	-45.4	-11	12.2	21	69.8	53	127.4	85	185.0	117	242.6	149	300.2	181	357.8
-42	-43.6	-10	14.0	22	71.6	54	129.2	86	186.8	118	244.4	150	302.0	182	359.6
-41	-41.8	-9	15.8	23	73.4	55	131.0	87	188.6	119	246.2	151	303.8	183	361.4
-40	-40.0	-8	17.6	24	75.2	56	132.8	88	190.4	120	248.0	152	305.6	184	363.2
-39	-38.2	-7	19.4	25	77.0	57	134.6	89	192.2	121	249.8	153	307.4	185	365.0
-38	-36.4	-6	21.2	26	78.8	58	136.4	90	194.0	122	251.6	154	309.2	186	366.8
-37	-34.6	-5	23.0	27	80.6	59	138.2	91	195.8	123	253.4	155	311.0	187	368.6
-36	-32.8	-4	24.8	28	82.4	60	140.0	92	197.6	124	255.2	156	312.8	188	370.4
-35	-31.0	-3	26.6	29	84.2	61	141.8	93	199.4	125	257.0	157	314.6	189	372.2
-34	-29.2	-2	28.4	30	86.0	62	143.6	94	201.2	126	258.8	158	316.4	190	374.0
-33	-27.4	-1	30.2	31	87.8	63	145.4	95	203.0	127	260.6	159	318.2	191	375.8
-32	-25.6	0	32.0	32	89.6	64	147.2	96	204.8	128	262.4	160	320.0	192	377.6
-31	-23.8	1	33.8	33	91.4	65	149.0	97	206.6	129	264.2	161	321.8	193	379.4
-30	-22.0	2	35.6	34	93.2	66	150.8	98	208.4	130	266.0	162	323.6	194	381.2
-29	-20.2	3	37.4	35	95.0	67	152.6	99	210.2	131	267.8	163	325.4	195	383.0
-28	-18.4	4	39.2	36	96.8	68	154.4	100	212.0	132	269.6	164	327.2	196	384.8
-27	-16.6	5	41.0	37	98.6	69	156.2	101	213.8	133	271.4	165	329.0	197	386.6
-26	-14.8	6	42.8	38	100.4	70	158.0	102	215.6	134	273.2	166	330.8	198	388.4
-25	-13.0	7	44.6	39	102.2	71	159.8	103	217.4	135	275.0	167	332.6	199	390.2
-24	-11.2	8	46.4	40	104.0	72	161.6	104	219.2	136	276.8	168	334.4	200	392.0
-23	-9.4	9	48.2	41	105.8	73	163.4	105	221.0	137	278.6	169	336.4	210	410.0
-22	-7.6	10	50.0	42	107.6	74	165.2	106	222.8	138	280.4	170	338.0	220	428.0
-21	-5.8	11	51.8	43	109.4	75	167.0	107	224.6	139	282.2	171	339.8	230	446.0
-20	-4.4	12	53.6	44	111.2	76	168.8	108	226.4	140	284.0	172	341.6	240	464.0
-19	-2.2	13	55.4	45	113.0	77	170.6	109	228.2	141	285.8	173	343.4	250	482.0

APPENDIX B

HYDRAULIC CIRCUIT DIAGRAM (Automatic Transmission)

CONTENTS

	PAGE
Park	B— 3
Reverse	B— 5
Neutral	B— 6
Drive - Fourth Gear (Converter Clutch Applied)	B— 6
Drive - Third Gear (Converter Clutch Applied)	B— 7
Drive - Third Gear (Converter Clutch Released)	B— 8
Drive - Second Gear	B— 9
Drive - First Gear	B—10
3rd - Third Gear (Converter Clutch Released)	B—11
2nd - Second Gear	B—12
1st - First Gear	B—13

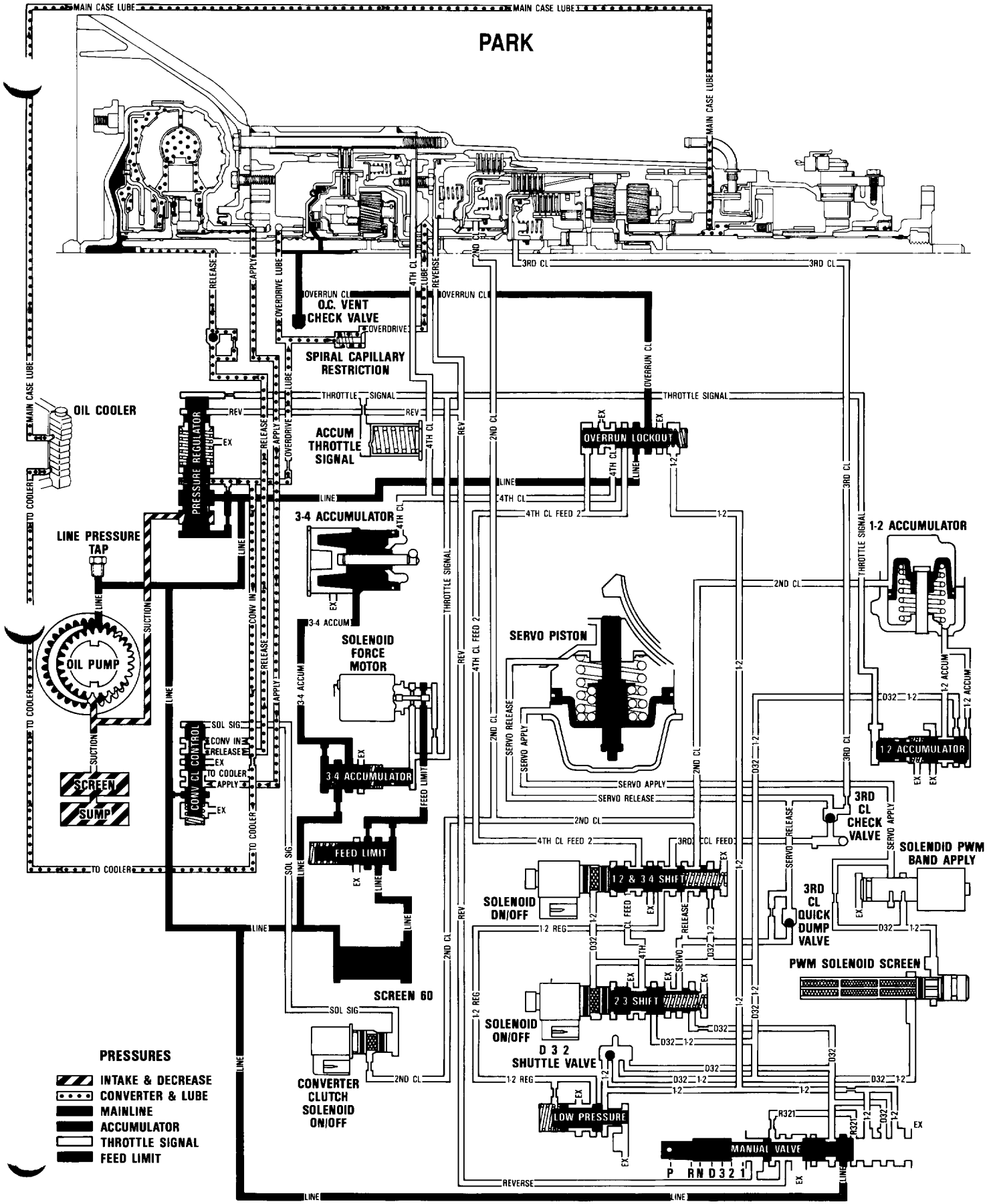
PARK
MAIN CASE LUBE
O.C. VENT CHECK VALVE
SPIRAL CAPILLARY RESTRICTION
OVERRUN CL
OVERDRIVE
OIL COOLER
TO COOLER
PRESSURE REGULATOR
THROTTLE SIGNAL
ACCUM THROTTLE SIGNAL
OVERRUN LOCKOUT
LINE PRESSURE TAP
3-4 ACCUMULATOR
1-2 ACCUMULATOR
OIL PUMP
SUCTION
SOLENOID FORCE MOTOR
SERVO PISTON
SERVO APPLY
SERVO RELEASE
CONV CL CONTROL
SCREEN
SUMP
3 4 ACCUMULATOR
FEED LIMIT
3RD CL CHECK VALVE
SOLENOID PWM BAND APPLY
1 2 & 3 4 SHIFT
SOLENOID ON/OFF
3RD CL QUICK DUMP VALVE
PWM SOLENOID SCREEN
SCREEN 60
2 3 SHIFT
D 3 2 SHUTTLE VALVE
CONVERTER CLUTCH SOLENOID ON/OFF
LOW PRESSURE
MANUAL VALVE
P R N D 3 2 1
PRESSURES
INTAKE & DECREASE
CONVERTER & LUBE
MAINLINE
ACCUMULATOR
THROTTLE SIGNAL
FEED LIMIT

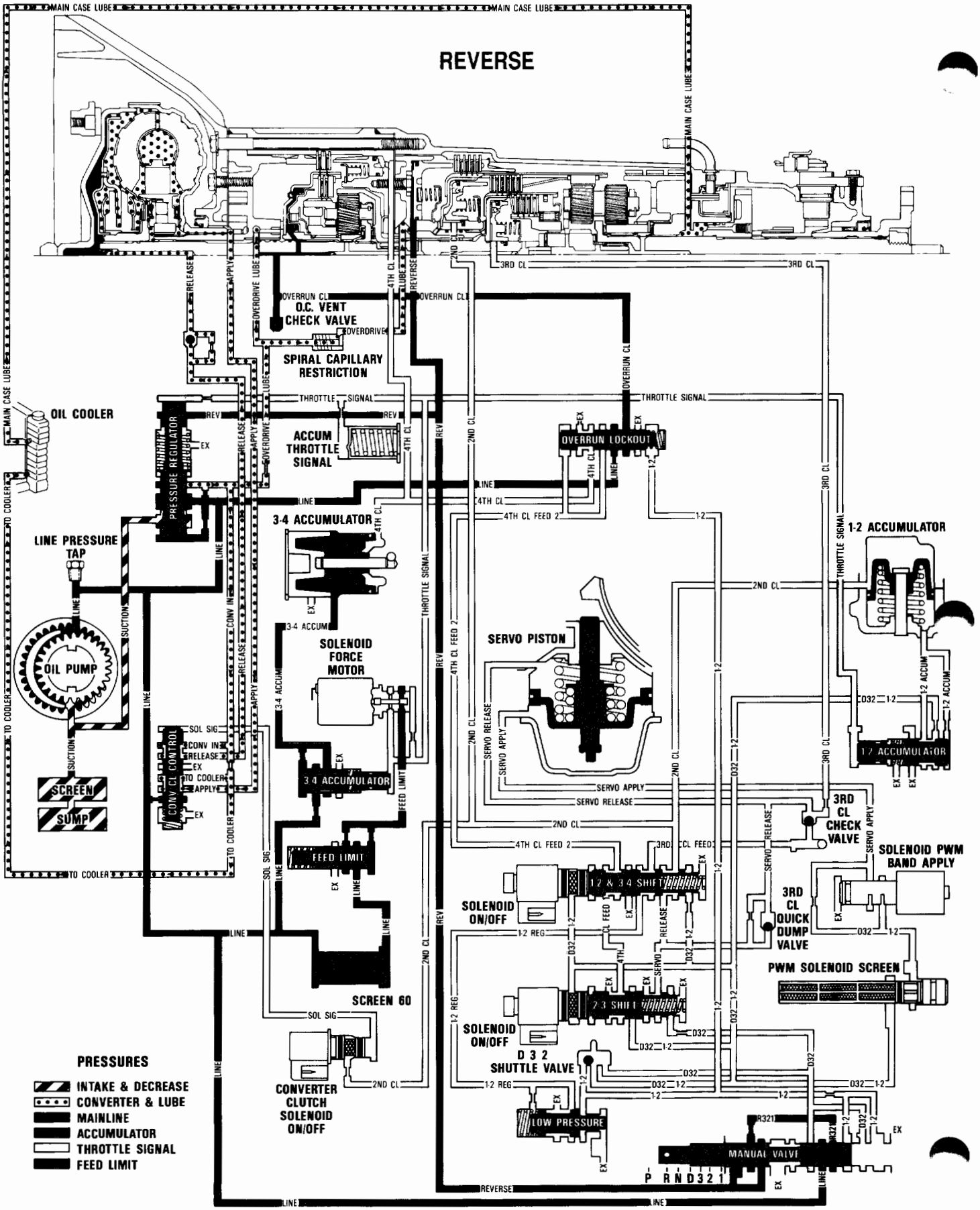
REVERSE
MAIN CASE LUBE
O.C. VENT CHECK VALVE
SPIRAL CAPILLARY RESTRICTION
OIL COOLER
PRESSURE REGULATOR
ACCUM THROTTLE SIGNAL
OVERRUN LOCKOUT
LINE PRESSURE TAP
3-4 ACCUMULATOR
1-2 ACCUMULATOR
OIL PUMP
SOLENOID FORCE MOTOR
SERVO PISTON
CONV CL CONTROL
SCREEN
SUMP
FEED LIMIT
3RD CL CHECK VALVE
SOLENOID PWM BAND APPLY
1-2 & 3-4 SHIFT
SOLENOID ON/OFF
3RD CL QUICK DUMP VALVE
PWM SOLENOID SCREEN
SCREEN 60
2-3 SHIFT
D 3 2 SHUTTLE VALVE
CONVERTER CLUTCH SOLENOID ON/OFF
LOW PRESSURE
MANUAL VALVE
P R N D 3 2 1
PRESSURES
INTAKE & DECREASE
CONVERTER & LUBE
MAINLINE
ACCUMULATOR
THROTTLE SIGNAL
FEED LIMIT

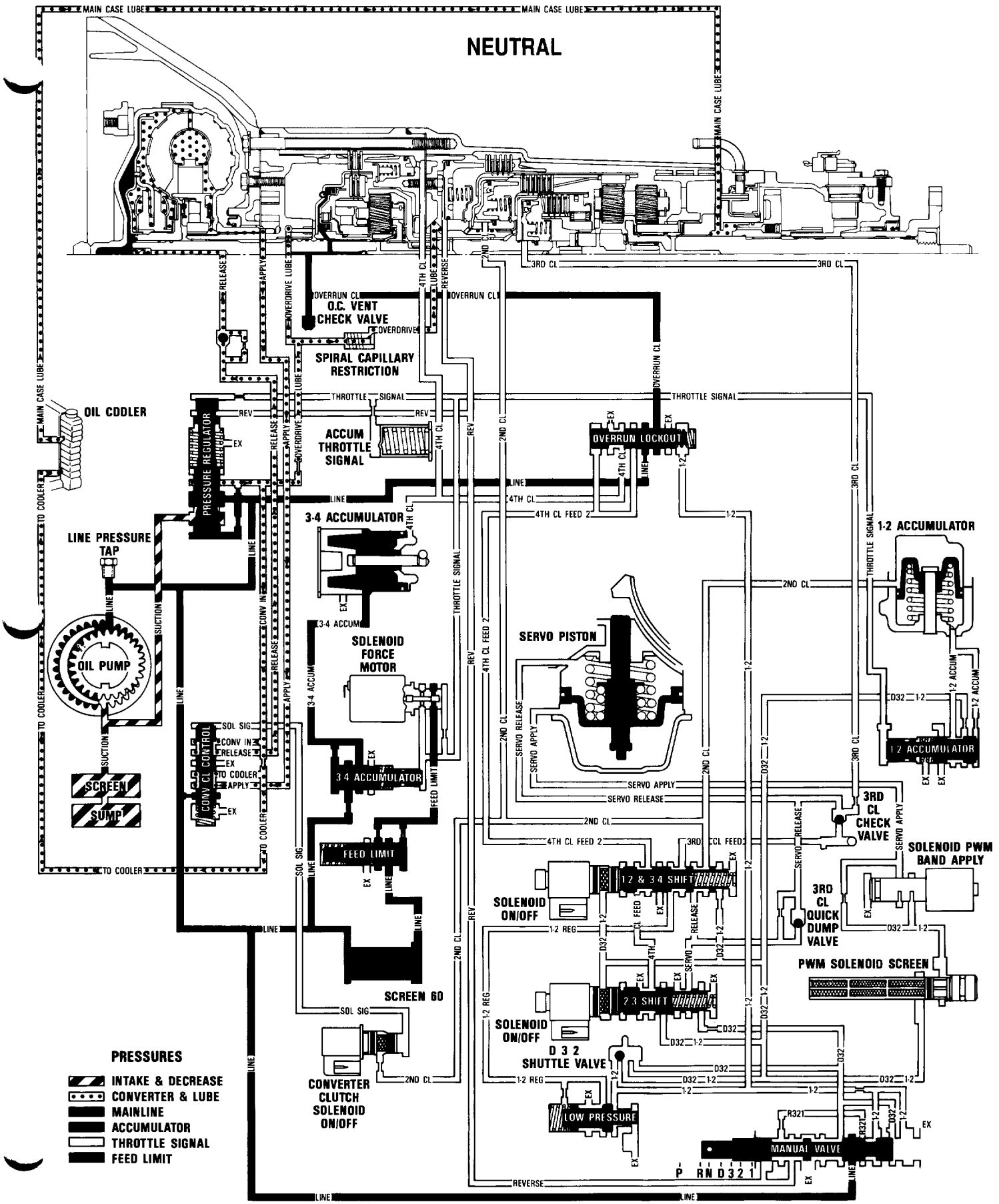
NEUTRAL
MAIN CASE LUBE
O.C. VENT CHECK VALVE
SPIRAL CAPILLARY RESTRICTION
OIL COOLER
PRESSURE REGULATOR
ACCUM THROTTLE SIGNAL
OVERRUN LOCKOUT
LINE PRESSURE TAP
3-4 ACCUMULATOR
1-2 ACCUMULATOR
OIL PUMP
SOLENOID FORCE MOTOR
SERVO PISTON
CONV CL CONTROL
SCREEN
SUMP
3 4 ACCUMULATOR
FEED LIMIT
3RD CL CHECK VALVE
SOLENOID PWM BAND APPLY
1 2 & 3 4 SHIFT
SOLENOID ON/OFF
3RD CL QUICK DUMP VALVE
PWM SOLENOID SCREEN
SCREEN 60
2 3 SHIFT
D 3 2 SHUTTLE VALVE
CONVERTER CLUTCH SOLENOID ON/OFF
LOW PRESSURE
MANUAL VALVE
P R N D 3 2 1
PRESSURES
INTAKE & DECREASE
CONVERTER & LUBE
MAINLINE
ACCUMULATOR
THROTTLE SIGNAL
FEED LIMIT

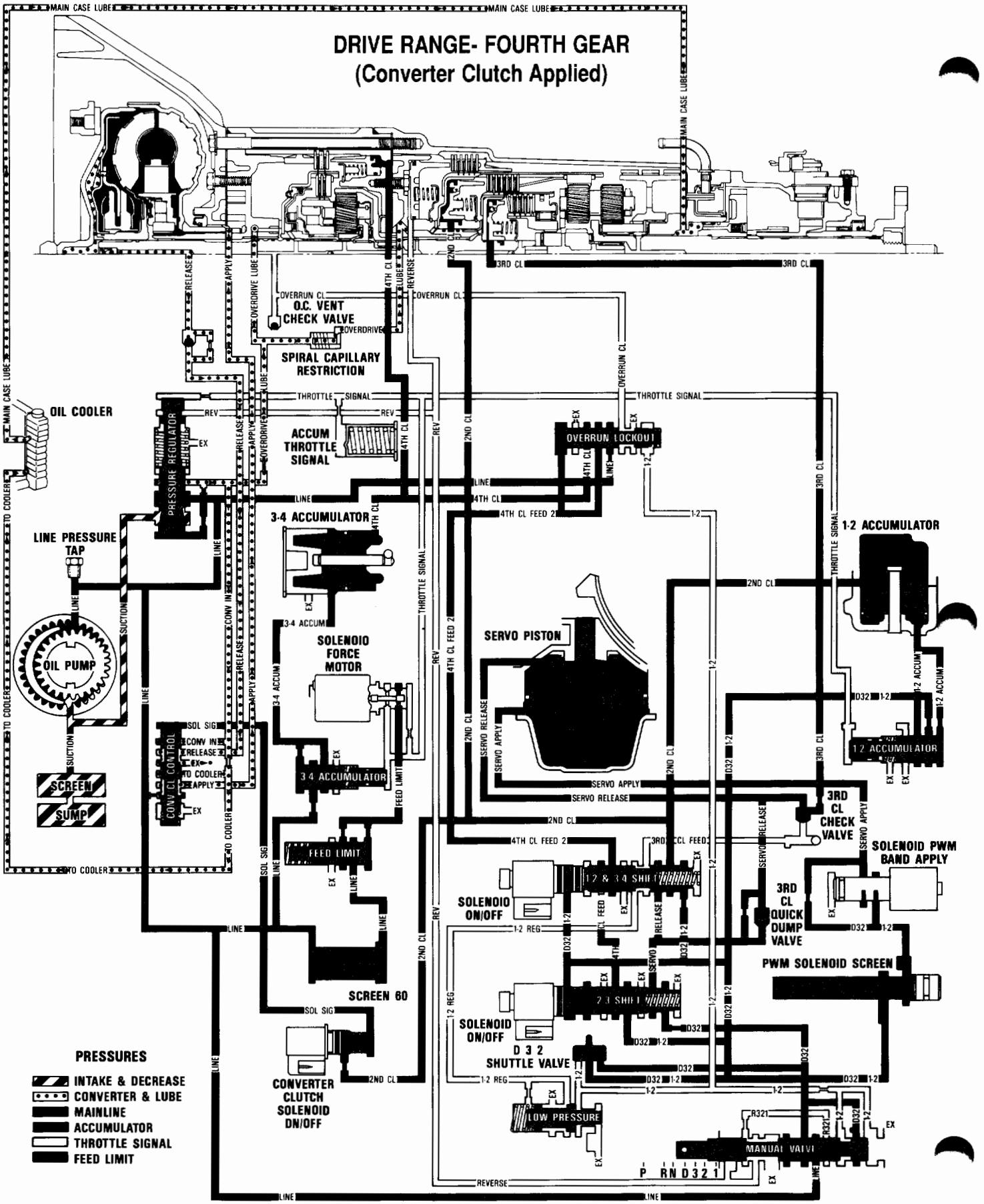
DRIVE RANGE- FOURTH GEAR
(Converter Clutch Applied)
MAIN CASE LUBE
OIL COOLER
TO COOLER
LINE PRESSURE TAP
OIL PUMP
SUCTION
SCREEN
SUMP
PRESSURE REGULATOR
CONV CL CONTROL
SOL SIG
CONV IN
RELEASE
APPLY
EX
O.C. VENT CHECK VALVE
OVERDRIVE
OVERDRIVE LUBE
SPIRAL CAPILLARY RESTRICTION
OVERRUN CL
THROTTLE SIGNAL
REV
ACCUM THROTTLE SIGNAL
3-4 ACCUMULATOR
3-4 ACCUM
SOLENOID FORCE MOTOR
3 4 ACCUMULATOR
FEED LIMIT
SCREEN 60
CONVERTER CLUTCH SOLENOID ON/OFF
4TH CL
4TH CL FEED 2
2ND CL
3RD CL
REVERSE
OVERRUN LOCKOUT
SERVO PISTON
SERVO RELEASE
SERVO APPLY
1-2 ACCUMULATOR
1 2 ACCUMULATOR
D32
1-2
3RD CL CHECK VALVE
SOLENOID PWM BAND APPLY
3RD CL QUICK DUMP VALVE
PWM SOLENOID SCREEN
1 2 & 3 4 SHIFT
SOLENOID ON/OFF
1-2 REG
2 3 SHIFT
D 3 2 SHUTTLE VALVE
LOW PRESSURE
MANUAL VALVE
P R N D 3 2 1
R321
PRESSURES
INTAKE & DECREASE
CONVERTER & LUBE
MAINLINE
ACCUMULATOR
THROTTLE SIGNAL
FEED LIMIT

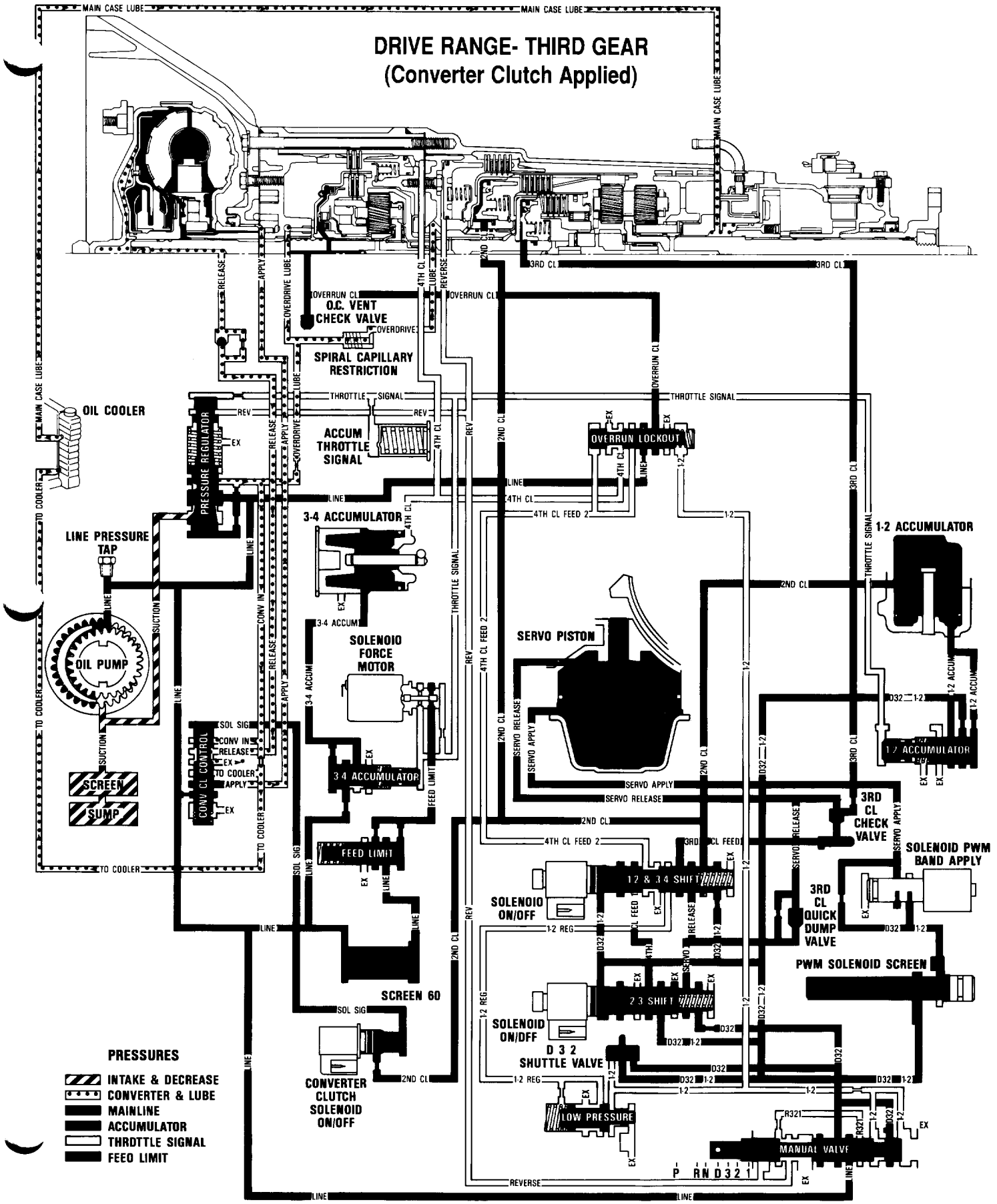
DRIVE RANGE- THIRD GEAR
(Converter Clutch Applied)
MAIN CASE LUBE
O.C. VENT
CHECK VALVE
SPIRAL CAPILLARY
RESTRICTION
OIL COOLER
PRESSURE REGULATOR
ACCUM
THROTTLE
SIGNAL
OVERRUN LOCKOUT
3-4 ACCUMULATOR
LINE PRESSURE
TAP
OIL PUMP
SCREEN
SUMP
CONV CL CONTROL
SOLENOID
FORCE
MOTOR
SERVO PISTON
1-2 ACCUMULATOR
3-4 ACCUMULATOR
FEED LIMIT
3RD
CL
CHECK
VALVE
SOLENOID PWM
BAND APPLY
1-2 & 3-4 SHIFT
SOLENOID
ON/OFF
3RD
CL
QUICK
DUMP
VALVE
PWM SOLENOID SCREEN
SCREEN 60
2-3 SHIFT
SOLENOID
ON/OFF
D 3 2
SHUTTLE VALVE
CONVERTER
CLUTCH
SOLENOID
ON/OFF
LOW PRESSURE
MANUAL VALVE
P R N D 3 2 1
PRESSURES
INTAKE & DECREASE
CONVERTER & LUBE
MAINLINE
ACCUMULATOR
THROTTLE SIGNAL
FEED LIMIT

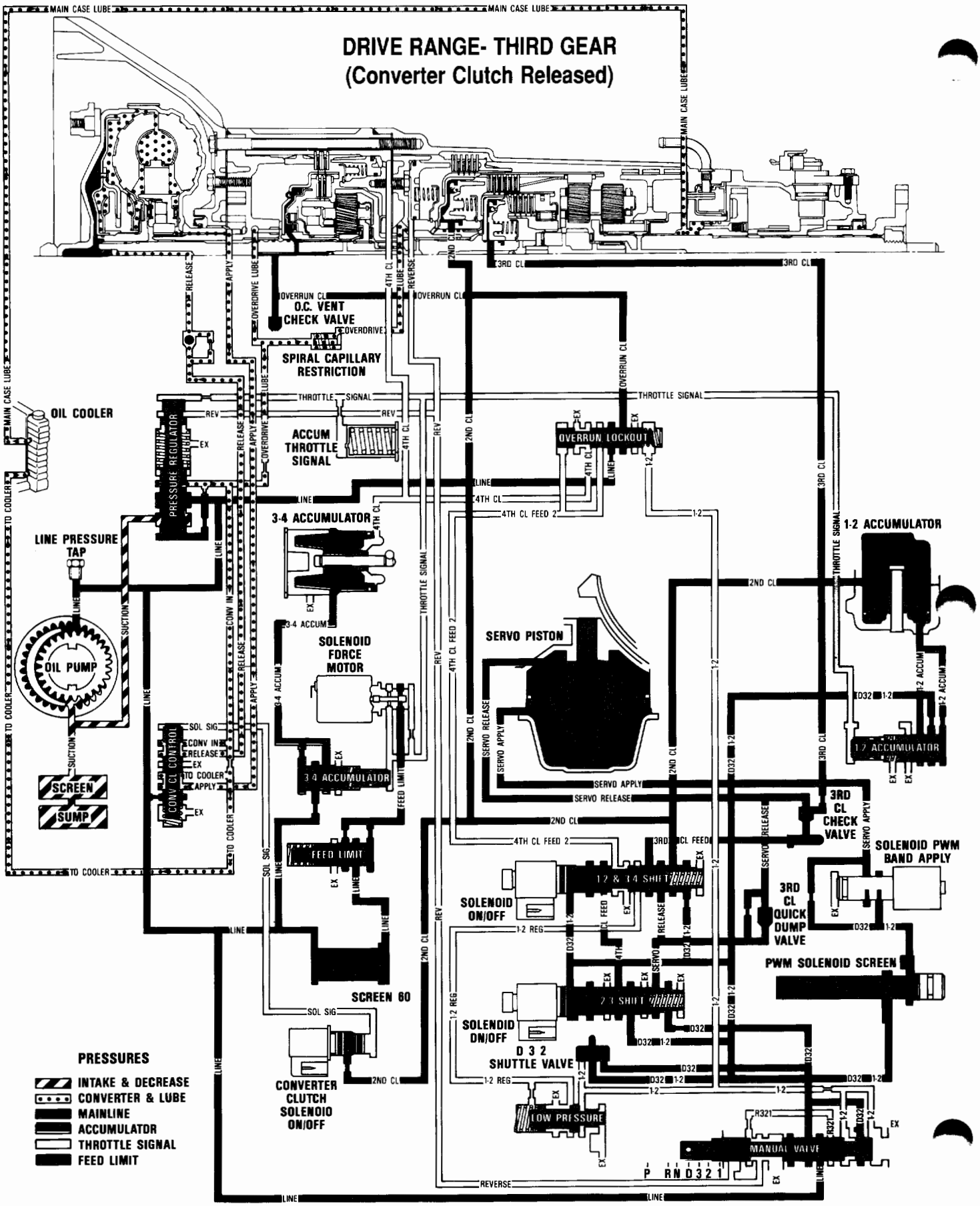
DRIVE RANGE- THIRD GEAR
(Converter Clutch Released)
MAIN CASE LUBE
OIL COOLER
TO COOLER
LINE PRESSURE TAP
OIL PUMP
SUCTION
SCREEN
SUMP
PRESSURE REGULATOR
CONV CL CONTROL
SOL SIG
CONV IN
RELEASE
EX
APPLY
REV
THROTTLE SIGNAL
ACCUM THROTTLE SIGNAL
O.C. VENT CHECK VALVE
OVERDRIVE
OVERRUN CL
SPIRAL CAPILLARY RESTRICTION
OVERDRIVE LUBE
3-4 ACCUMULATOR
3-4 ACCUM
SOLENOID FORCE MOTOR
FEED LIMIT
SCREEN 60
CONVERTER CLUTCH SOLENOID ON/OFF
4TH CL
4TH CL FEED 2
2ND CL
3RD CL
REVERSE
OVERRUN LOCKOUT
SERVO PISTON
SERVO APPLY
SERVO RELEASE
1-2 ACCUMULATOR
1-2 ACCUM
D32
1-2
3RD CL CHECK VALVE
SOLENOID PWM BAND APPLY
1-2 & 3-4 SHIFT
SOLENOID ON/OFF
1-2 REG
3RD CL QUICK DUMP VALVE
PWM SOLENOID SCREEN
2-3 SHIFT
SOLENOID ON/OFF
D 3 2 SHUTTLE VALVE
LOW PRESSURE
MANUAL VALVE
P R N D 3 2 1
PRESSURES
INTAKE & DECREASE
CONVERTER & LUBE
MAINLINE
ACCUMULATOR
THROTTLE SIGNAL
FEED LIMIT

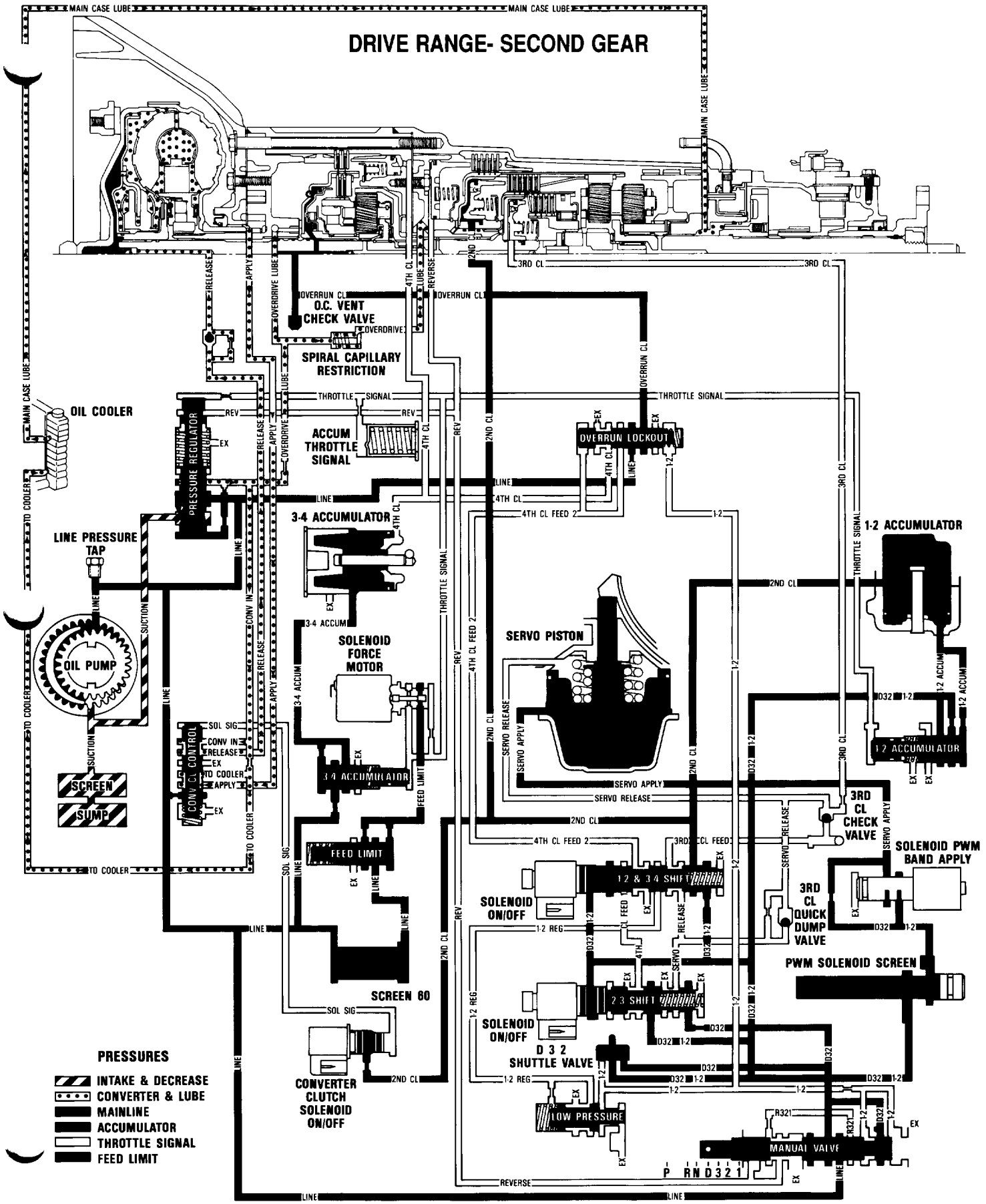
DRIVE RANGE- SECOND GEAR
MAIN CASE LUBE
O.C. VENT CHECK VALVE
SPIRAL CAPILLARY RESTRICTION
OIL COOLER
PRESSURE REGULATOR
ACCUM THROTTLE SIGNAL
OVERRUN LOCKOUT
LINE PRESSURE TAP
3-4 ACCUMULATOR
1-2 ACCUMULATOR
OIL PUMP
SOLENOID FORCE MOTOR
SERVO PISTON
CONV CL CONTROL
SCREEN
SUMP
FEED LIMIT
3-4 ACCUMULATOR
3RD CL CHECK VALVE
SOLENOID PWM BAND APPLY
1-2 & 3-4 SHIFT
SOLENOID ON/OFF
3RD CL QUICK DUMP VALVE
PWM SOLENOID SCREEN
SCREEN 60
2-3 SHIFT
SOLENOID ON/OFF
D 3 2 SHUTTLE VALVE
CONVERTER CLUTCH SOLENOID ON/OFF
LOW PRESSURE
MANUAL VALVE
P R N D 3 2 1
PRESSURES
INTAKE & DECREASE
CONVERTER & LUBE
MAINLINE
ACCUMULATOR
THROTTLE SIGNAL
FEED LIMIT

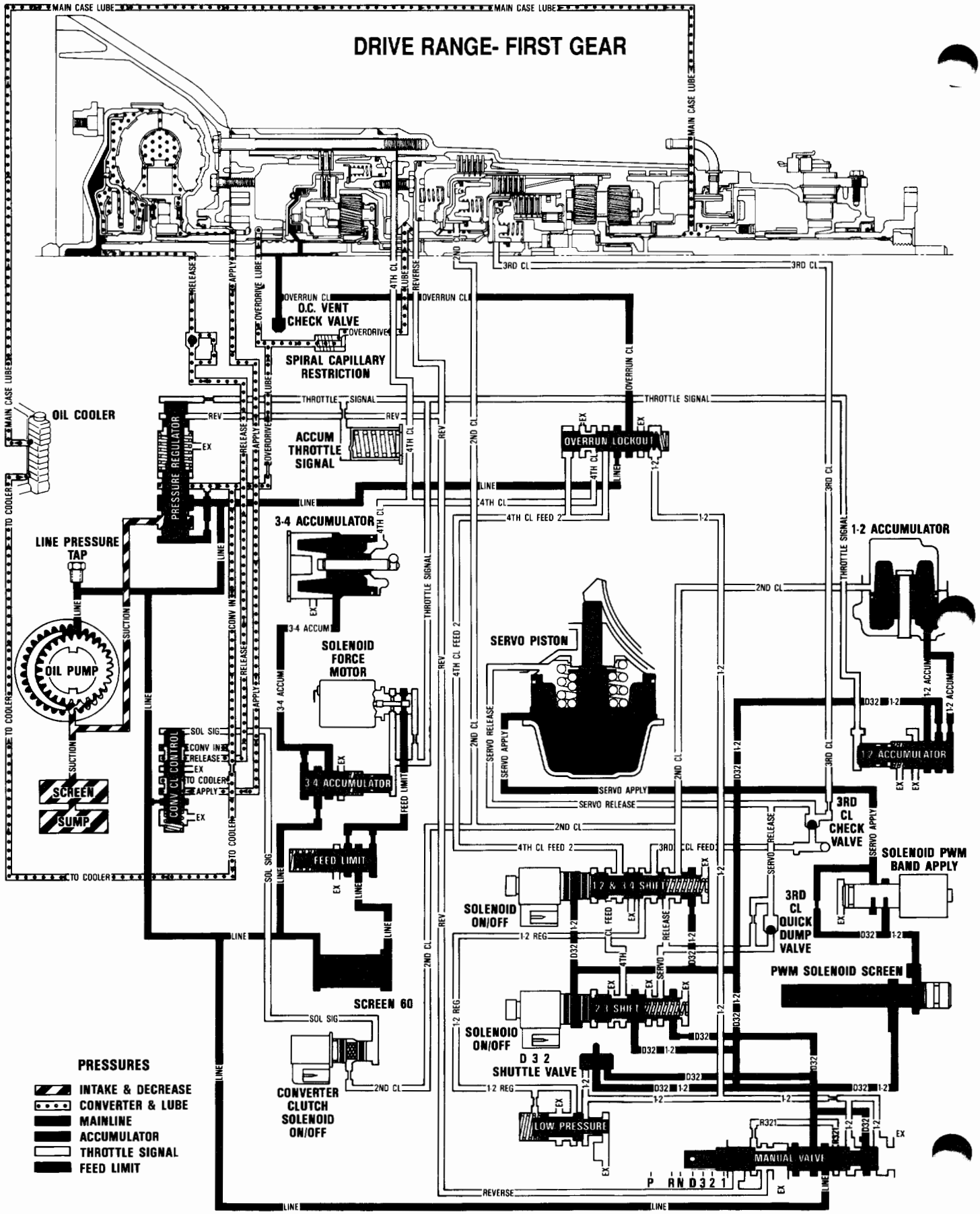
DRIVE RANGE- FIRST GEAR
MAIN CASE LUBE
O.C. VENT CHECK VALVE
SPIRAL CAPILLARY RESTRICTION
OIL COOLER
PRESSURE REGULATOR
ACCUM THROTTLE SIGNAL
OVERRUN LOCKOUT
LINE PRESSURE TAP
3-4 ACCUMULATOR
1-2 ACCUMULATOR
OIL PUMP
SOLENOID FORCE MOTOR
SERVO PISTON
CONV CL CONTROL
SCREEN
SUMP
FEED LIMIT
3RD CL CHECK VALVE
SOLENOID PWM BAND APPLY
SOLENOID ON/OFF
3RD CL QUICK DUMP VALVE
PWM SOLENOID SCREEN
SCREEN 60
D 3 2 SHUTTLE VALVE
CONVERTER CLUTCH SOLENOID ON/OFF
LOW PRESSURE
MANUAL VALVE
P R N D 3 2 1
PRESSURES
INTAKE & DECREASE
CONVERTER & LUBE
MAINLINE
ACCUMULATOR
THROTTLE SIGNAL
FEED LIMIT

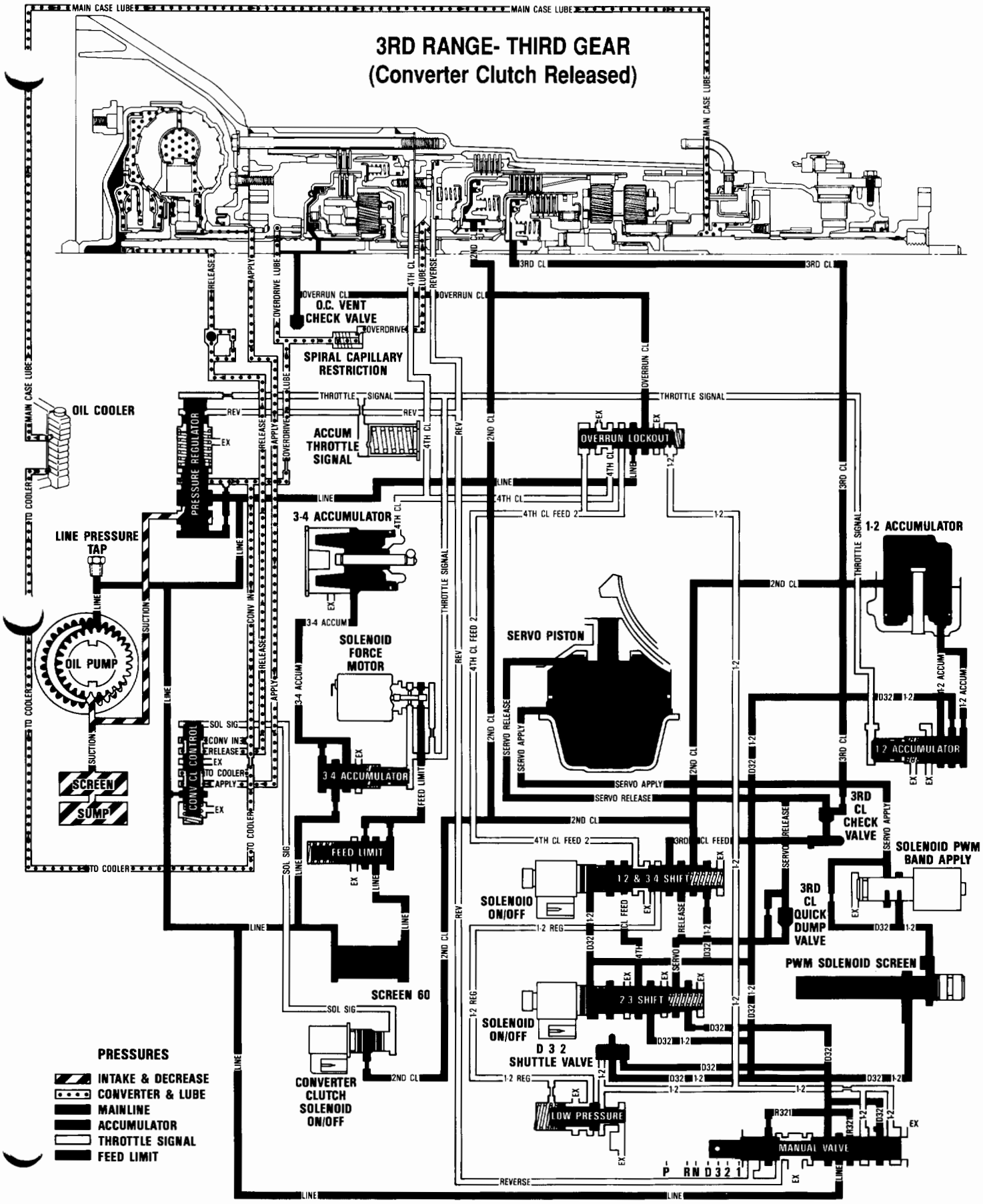
3RD RANGE- THIRD GEAR
(Converter Clutch Released)
MAIN CASE LUBE
OIL COOLER
TO COOLER
LINE PRESSURE TAP
OIL PUMP
SUCTION
SCREEN
SUMP
PRESSURE REGULATOR
CONV CL CONTROL
SOL SIG
CONV IN
RELEASE
EX
TO COOLER
APPLY
OVERDRIVE LUBE
O.C. VENT CHECK VALVE
OVERRUN CL
OVERDRIVE
SPIRAL CAPILLARY RESTRICTION
THROTTLE SIGNAL
REV
ACCUM THROTTLE SIGNAL
3-4 ACCUMULATOR
3-4 ACCUM
SOLENOID FORCE MOTOR
3 4 ACCUMULATOR
FEED LIMIT
SCREEN 60
CONVERTER CLUTCH SOLENOID ON/OFF
2ND CL
4TH CL
LINE
4TH CL FEED 2
OVERRUN LOCKOUT
SERVO PISTON
SERVO RELEASE
SERVO APPLY
1-2 ACCUMULATOR
1 2 ACCUMULATOR
3RD CL
3RD CL CHECK VALVE
SOLENOID PWM BAND APPLY
1 2 & 3 4 SHIFT
SOLENOID ON/OFF
1-2 REG
3RD CL QUICK DUMP VALVE
PWM SOLENOID SCREEN
2 3 SHIFT
D 3 2 SHUTTLE VALVE
LOW PRESSURE
MANUAL VALVE
P R N D 3 2 1
REVERSE
PRESSURES
INTAKE & DECREASE
CONVERTER & LUBE
MAINLINE
ACCUMULATOR
THROTTLE SIGNAL
FEED LIMIT

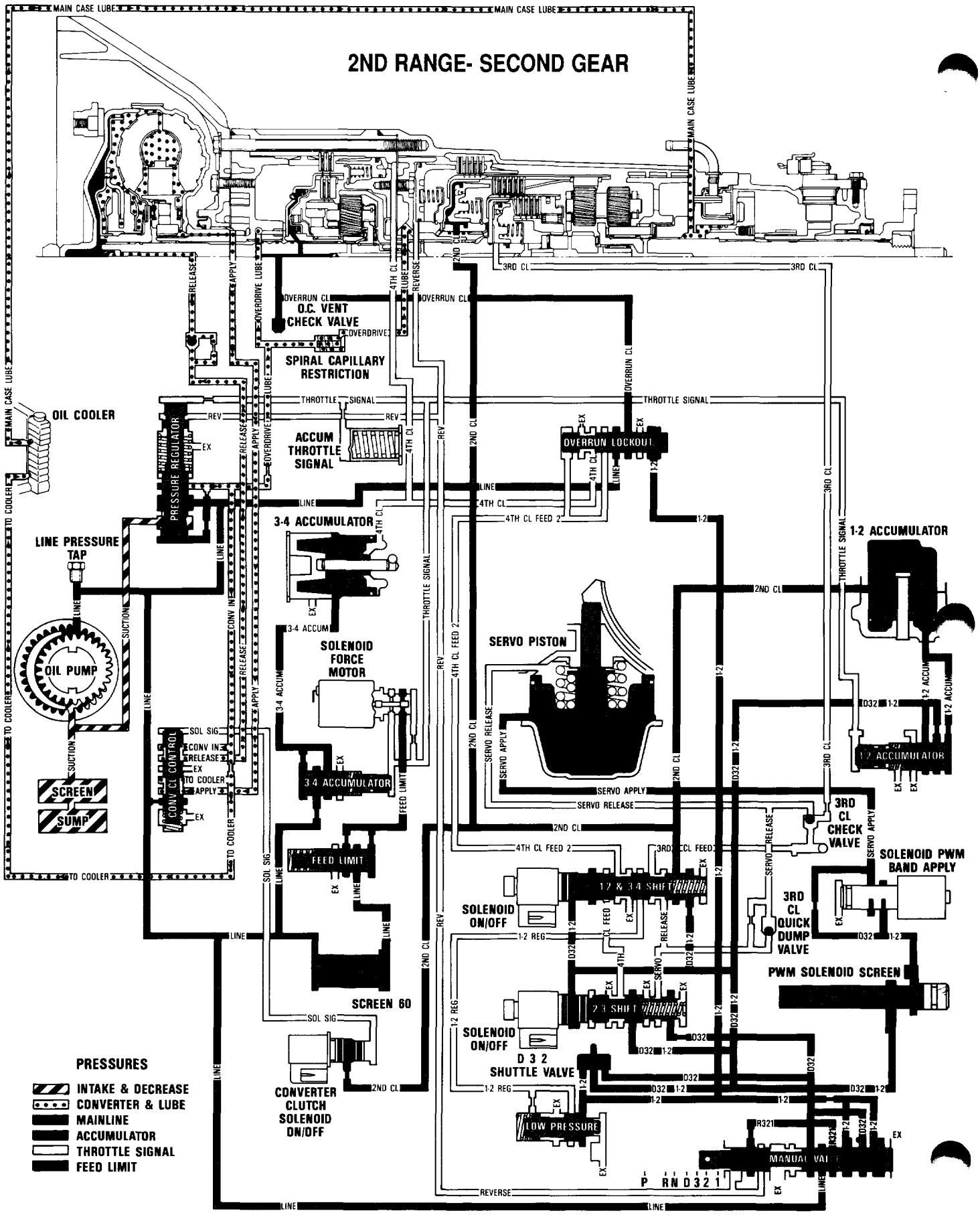
2ND RANGE- SECOND GEAR
MAIN CASE LUBE
O.C. VENT CHECK VALVE
SPIRAL CAPILLARY RESTRICTION
OIL COOLER
PRESSURE REGULATOR
ACCUM THROTTLE SIGNAL
OVERRUN LOCKOUT
LINE PRESSURE TAP
3-4 ACCUMULATOR
1-2 ACCUMULATOR
OIL PUMP
SOLENOID FORCE MOTOR
SERVO PISTON
CONV CL CONTROL
SCREEN
SUMP
FEED LIMIT
3RD CL CHECK VALVE
SOLENOID PWM BAND APPLY
1-2 & 3-4 SHIFT
SOLENOID ON/OFF
3RD CL QUICK DUMP VALVE
PWM SOLENOID SCREEN
SCREEN 60
2-3 SHIFT
D 3 2 SHUTTLE VALVE
CONVERTER CLUTCH SOLENOID ON/OFF
LOW PRESSURE
MANUAL VALVE
P R N D 3 2 1
PRESSURES
INTAKE & DECREASE
CONVERTER & LUBE
MAINLINE
ACCUMULATOR
THROTTLE SIGNAL
FEED LIMIT

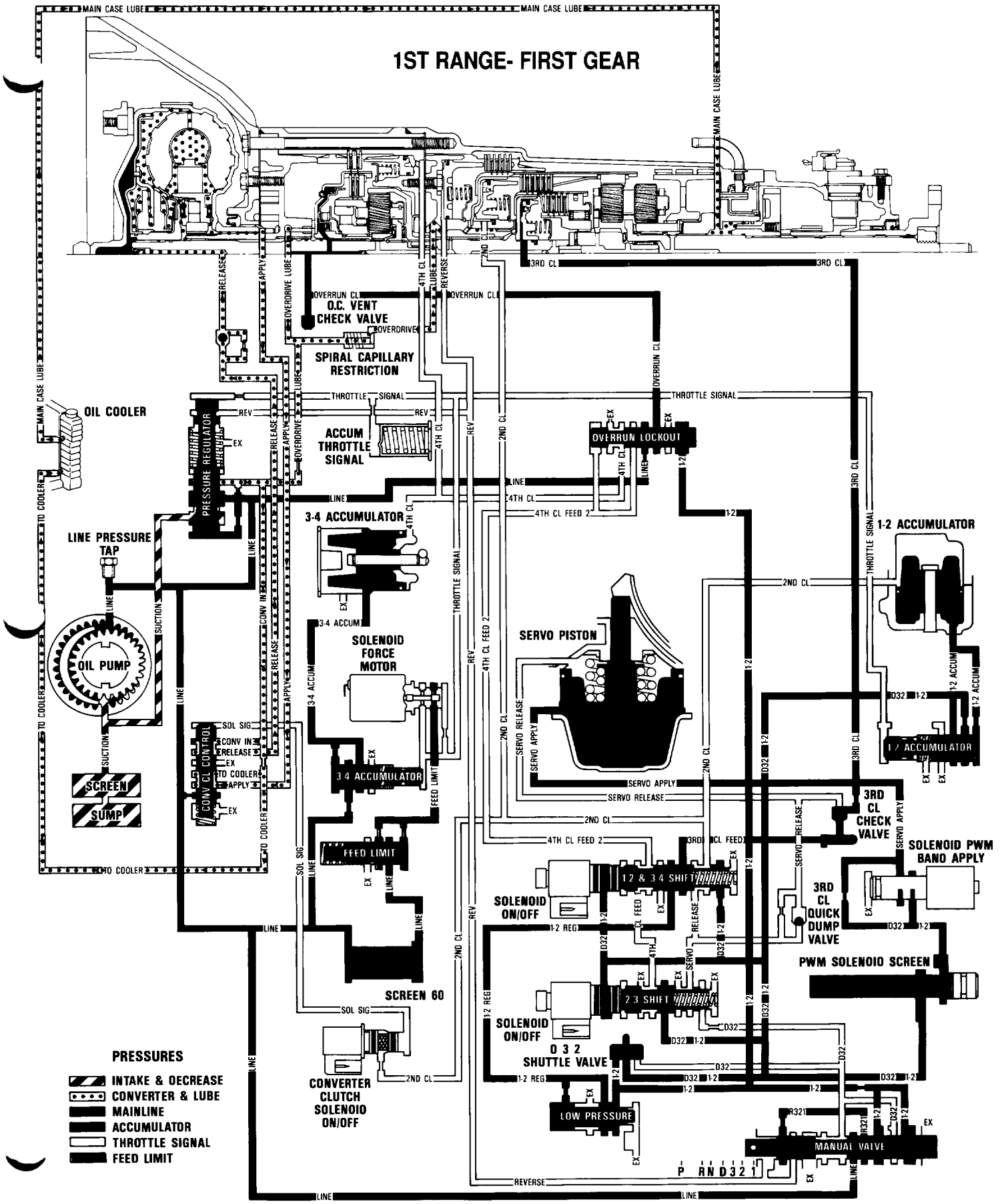
1ST RANGE- FIRST GEAR
MAIN CASE LUBE
O.C. VENT CHECK VALVE
SPIRAL CAPILLARY RESTRICTION
OIL COOLER
ACCUM THROTTLE SIGNAL
PRESSURE REGULATOR
OVERRUN LOCKOUT
LINE PRESSURE TAP
3-4 ACCUMULATOR
1-2 ACCUMULATOR
OIL PUMP
SOLENOID FORCE MOTOR
SERVO PISTON
SCREEN
SUMP
CONV CL CONTROL
3-4 ACCUMULATOR
FEED LIMIT
3RD CL CHECK VALVE
SOLENOID PWM BAND APPLY
12 & 34 SHIFT
SOLENOID ON/OFF
3RD CL QUICK DUMP VALVE
PWM SOLENOID SCREEN
SCREEN 60
23 SHIFT
SOLENOID ON/OFF
0 3 2 SHUTTLE VALVE
CONVERTER CLUTCH SOLENOID ON/OFF
LOW PRESSURE
MANUAL VALVE
P R N D 3 2 1
PRESSURES
INTAKE & DECREASE
CONVERTER & LUBE
MAINLINE
ACCUMULATOR
THROTTLE SIGNAL
FEED LIMIT

MEMO

UX00-WSM-L0001-00